at&t

Guy M. Hicks
*General Attorney - TN*

AT&T Tennessee
333 Commerce Street
Suite 2101
Nashville, TN 37201-1800

T: 615.214.6301
F: 615-214-7406
gh1402@att.com

January 8, 2010

**VIA HAND DELIVERY**

Hon. Sara Kyle, Chairman
Tennessee Regulatory Authority
460 James Robertson Parkway
Nashville, Tennessee 37243-0505

Re: *BellSouth Telecommunications, Inc. dba AT&T Southeast dba AT&T Tennessee vs. Budget Prepay, Inc. dba Budget Phone fka Budget Phone, Inc.*

Docket No. 10-00004

Dear Chairman Kyle:

Enclosed are the original and four copies of *AT&T Tennessee's Complaint and Petition for Relief*. A copy has also been provided electronically.

A copy has been provided to Budge Prepay.

Sincerely yours,

Guy M. Hicks by Nanette w/permission

USA Proud Sponsor of the U.S. Olympic Team

BEFORE THE TENNESSEE REGULATORY AUTHORITY
Nashville, Tennessee

In Re: *BellSouth Telecommunications, Inc. dba AT&T Southeast dba AT&T Tennessee vs. Budget Prepay, Inc. dba Budget Phone fka Budget Phone, Inc.*

Docket No. _____

**AT&T TENNESSEE'S COMPLAINT AND PETITION FOR RELIEF**

Pursuant to 47 U.S.C. §252 and Tennessee Regulatory Authority (the "TRA" or "Authority") Rules 1220-1-2-.02, 1220-1-2-.05 and 1220-1-1-.08, Complainant/Petitioner BellSouth Telecommunications, Inc. dba AT&T Southeast dba AT&T Tennessee ("AT&T Tennessee") respectfully requests that the Authority convene a docket for the purposes of: resolving billing disputes between Defendant/Respondent Budget Prepay, Inc. dba Budget Phone fka Budget Phone, Inc. ("Budget") and AT&T Tennessee; determining the amount defendant Budget owes AT&T Tennessee under the parties' interconnection agreement(s)[1] and requiring Budget to pay that amount to AT&T Tennessee.[2]

---

[1] In September 2009, AT&T Tennessee began applying a new methodology for calculating the resale promotional credits it will provide Budget and other CLECs with regard to the cashback component of certain retail promotional offerings. ***AT&T Tennessee is not seeking any amounts billed under this new methodology in this Docket.***

[2] AT&T Tennessee is filing similar Complaints and Petitions against four other competitive local exchange carriers with the Authority. Because of the commonality of the issues set forth in Section IV. of this Complaint and Petition with the issues set forth in Section IV. of those other four Complaints and Petitions, AT&T Tennessee intends to file a motion to consolidate these five dockets for the purposes of resolving those common issues. AT&T Tennessee will file that motion in each of these dockets after the Authority assigns them docket numbers.

## I. BACKGROUND AND SUMMARY OF COMPLAINT AND PETITION

Budget owes AT&T Tennessee a past-due and unpaid balance for telecommunications services AT&T Tennessee provided it for resale under the terms and conditions of applicable interconnection agreement(s). As of November 9, 2009, this past-due and unpaid balance totals, in the aggregate, more than $165,000 in the State of Tennessee.[3] To the extent that Budget has disputed AT&T Tennessee's bills, AT&T Tennessee has denied those disputes as required by its interconnection agreement(s) with Budget. Budget, however, has declined to pay AT&T Tennessee the amounts associated with these denied disputes. A substantial amount of this past-due and unpaid balance is the result of Budget's withholding payments to AT&T Tennessee for one or both of the following reasons:[4] (1) Budget erroneously asserts that AT&T Tennessee cannot apply the resale discount approved by the Authority to the cashback component of various promotional offers that AT&T Tennessee makes available for resale;[5] and (2) Budget erroneously asserts that AT&T Tennessee's customer referral marketing promotions (such as the "word-of-mouth" promotion) are subject to resale.

The interconnection agreement(s) between AT&T Tennessee and Budget provide that disputes like these are to be resolved in the first instance by the Authority. AT&T Tennessee, therefore, respectfully requests that the Authority resolve the

---

[3] As of November 9, 2009, Budget's unpaid and past-due balance is over $1.9 Million across the nine southeastern states that comprised the former BellSouth's ILEC operating territory.

[4] A more detailed description of Budget's assertions, and a brief explanation of why they are erroneous, is set forth in Section IV. below.

[5] For one-time "cash back" promotions, AT&T contends that resellers should receive less than the face amount of the promotion minus the wholesale discount because such valuation does not reflect the true economic value of the promotion on retail rates. Among other things, it does not consider the redemption rate, the in-serve life of the subject customer, or the net present value of a one-time upfront payment associated with the promotion. Recently, AT&T implemented a new methodology aimed at providing the true economic value of the promotion to resellers. Several resellers are challenging the methodology in other proceedings; but that issue is not before the Authority in this docket because AT&T Tennessee is not seeking any amounts billed under this new methodology in this docket.

outstanding disputes, determine the amount that defendant Budget owes AT&T Tennessee under the parties' interconnection agreement(s), and require Budget to pay that amount to AT&T Tennessee.

## II. PARTIES

1. AT&T Tennessee is a corporation organized under the laws of the state of Georgia. AT&T Tennessee is an incumbent local exchange carrier ("ILEC") as that term is defined by federal[6] and state law. For market regulated companies, including AT&T Tennessee, the Authority has jurisdiction to resolve carrier-to-carrier complaints based on federal law. [7]

2. The full name and address of the authorized representative for AT&T Tennessee in this proceeding is:

Guy M. Hicks
Joelle J. Phillips
333 Commerce Street, Suite 2101
Nashville, TN 37201-3300
615 214 6301
gh1402@att.com
jp3881@att.com

3. Defendant Budget is organized under the laws of the state of Louisiana. Budget is a "telecommunications service provider" and "reseller" under state law, and it is authorized to provide resold local exchange telecommunications services within the State of Tennessee.

## III. BUDGET'S BREACH OF ITS INTERCONNECTION AGREEMENT(S)

4. In June, 2008, AT&T Tennessee and Budget entered into a negotiated interconnection agreement (the "Budget June 2008 agreement") in which AT&T

---

6 *See, e.g.*, 47 U.S.C. §251(h)(1).
7 *See* Tenn. Code Ann. § 65-5-109.

Tennessee agreed, among other things, to offer various telecommunications services for resale to Budget at specified wholesale rates and subject to specified terms and conditions.[8] The agreement was subsequently terminated. A copy of the Budget June 2008 agreement is on a CD attached hereto as Exhibit A.[9]

5. In October 2008, AT&T Tennessee and defendant Budget entered into a negotiated interconnection agreement (the "Budget October 2008 agreement") in which AT&T Tennessee agreed, among other things, to offer various telecommunications services for resale to Budget at specified wholesale rates and subject to specified terms and conditions. A copy of the Budget October 2008 agreement is on a CD attached hereto as Exhibit A.[10]

6. As of November 9, 2009, Budget owes a past due and unpaid balance to AT&T Tennessee in the amount of $165,691.44 (the "Past Due Balance"). The Past Due Balance represents the amounts AT&T Tennessee billed Budget for telecommunications services provided to Budget in Tennessee pursuant to the parties' interconnection agreement(s) less: payments made by Budget; and credits provided by AT&T Tennessee to Budget in connection with valid disputes and approved promotional credit requests submitted by Budget as of November 9, 2009.

7. The Past Due Balance does not include any amounts related to disputes or promotional credit requests submitted by Budget, but not yet reviewed by AT&T Tennessee.

---

[8] Specifically, Budget adopted the interconnection agreement of another carrier in accordance with federal law. Both the adoption agreement and the adopted interconnection agreement are included in Exhibit A.

[9] AT&T will make copies of this CD available to the parties upon request.

[10] Specifically, Budget adopted the interconnection agreement of another carrier in accordance with federal law. Both the adoption agreement and the adopted interconnection agreement are included in Exhibit A.

8. To the extent that the Past Due Balance includes any charges on AT&T Tennessee's invoices that Budget has disputed, AT&T Tennessee has denied those disputes as required by its interconnection agreement(s) with Budget.

9. Defendant Budget has breached the Budget October 2008 agreements by refusing to pay amounts that are due and owing to AT&T under those agreements.

## IV. BUDGET'S ERRONEOUS REASONS FOR NONPAYMENT

10. As noted above, a substantial amount of Budget's unpaid balance is the result of Budget's withholding payments to AT&T Tennessee for one or both of the following reasons.

### A. Application of the resale discount to the "cashback" component of promotional offerings.

11. Budget asserts that AT&T Tennessee cannot apply the resale discount approved by the Authority to the cashback component of various promotional offerings that AT&T Tennessee makes available for resale. Assume, for example, AT&T Tennessee's retail promotional offering provides a retail customer who purchases Telecommunications Service A under certain conditions a coupon that can be redeemed for a $50 check. When Budget resells that promotional offering to qualifying end users and submits to AT&T Tennessee an appropriate promotional credit request, AT&T Tennessee provides Budget a bill credit of $42 ($50 less the 16% resale discount established by the Authority). Budget, however, erroneously contends that it is entitled to a bill credit for the full $50 "face value" of the cashback amount.

12. There is no basis in logic or law for Budget's assertions. If AT&T Tennessee were to reduce the retail price of a telecommunications service by $50 in a given month (say from $200 to $150), Budget would not receive the full $50 "face value"

of the reduction when it purchased that service for resale. Instead, Budget would receive a $42 reduction – the $50 face value of the reduction less the 16% avoided cost discount established by the Authority.[11] Budget clearly should not receive a greater wholesale reduction merely because the retail reduction takes the form of a "cashback" offer rather than a price reduction.

13. The federal Act expressly contemplates that when an incumbent LEC resells services under §251(c)(4), "a State commission shall determine wholesale rates on the basis of retail rates charged to subscribers for the telecommunications service requested, excluding the portion thereof attributable to any marketing, billing, collection, and other costs that will be avoided by the local exchange carrier." 47 U.S.C. § 252(c)(3). Using this "costs avoided" standard, the Authority determined a state-wide percentage discount from the retail rate that is used to determine the wholesale rate at which the incumbent LEC, such as AT&T Tennessee, is to sell its services to CLECs for resale. Far from being inappropriate, subtracting the wholesale discount from the face value of the promotion is exactly what is contemplated by the federal Act.

**B. Customer Referral Marketing Promotions.**

14. Budget asserts that AT&T Tennessee's customer referral marketing promotions (such as the "word-of-mouth" promotion) are subject to resale. Assume, for example, that AT&T gives retail customers who qualify a $50 bill credit when they refer others who purchase AT&T services. Budget contends that it is entitled to resell this

[11] When the retail price of the service was $200, Budget paid AT&T Tennessee $168 ($200 less the 16% resale discount) when it purchased the service for resale. When the retail price of the service is reduced to $150, Budget pays AT&T Tennessee $126 ($150 less the 16% resale discount) when it purchases the service for resale. In other words, a $50 reduction in the retail price of the service results in a $42 reduction in the price Budget pays for the service (from $168 to $126), which is the $50 "face value" of the reduction less the 16% resale discount.

customer referral marketing promotion and that it therefore is entitled to a $50 bill credit when one of Budget's end users refers others who purchase services from Budget.

15. Subject to certain conditions and limitations, AT&T Tennessee is required "to offer for resale at wholesale rates any *telecommunications service* that [it] provides at retail to subscribers who are not telecommunications carriers." 47 U.S.C. §251(c)(4)(A)(emphasis added). Customer referral marketing promotions, however, are not telecommunications services that are subject to resale obligations. An end user does not receive any benefit under these promotions for purchasing telecommunications services from AT&T Tennessee. Instead, an end user receives benefits under these promotions only if he or she successfully markets AT&T Tennessee's services to others who then purchase services from AT&T Tennessee. Budget obviously is free to give similar benefits to its end users who successfully market its services to others, but it is not entitled to have AT&T Tennessee finance any such marketing programs that Budget may employ.

16. The federal Act makes it clear that CLECs must finance their own marketing programs when it directs State commissions to "determine wholesale rates on the basis of retail rates charged to subscribers for the telecommunications service requested, *excluding the portion thereof attributable to any marketing . . . costs that will be avoided by the local exchange carrier.*" 47 U.S.C. §252(d)(3). Accordingly, the resale discount rate that the Authority established (and that is incorporated in the Budget October 2008 agreements) already excludes the costs of customer referral marketing promotions like the "word of mouth" promotion. To go further and also require AT&T Tennessee to give Budget additional promotional credits for these

customer referral marketing promotions would impermissibly force AT&T Tennessee to double-count its marketing expenses -- first in the wholesale rate, and again in the promotional credit.

## V. JURISDICTION

17. The Authority has jurisdiction to interpret and enforce the terms of the interconnection agreement(s) at issue in this docket. The 1996 Act expressly authorizes state commissions to mediate interconnection agreement negotiations,[12] arbitrate interconnection agreements,[13] and approve or reject interconnection agreements.[14] In addition, the courts have held that section 252 implicitly authorizes state commissions to interpret and enforce the interconnection agreements they approve.[15]

## VI. REQUEST FOR RELIEF

WHEREFORE, AT&T Tennessee respectfully requests that the Authority:

(1) Find and declare that Budget has breached the Budget October 2008 agreements by wrongfully withholding amounts due and payable to AT&T Tennessee for services provided in accordance with the parties' interconnection agreement(s);

(2) Find and declare that AT&T Tennessee has been financially harmed as a direct result of Budget's breach;

---

12 47 U.S.C. § 252(a)(2)

13 *Id.* § 252(b)

14 *Id.* § 252(e)

15 See, e.g., *Bell Atl. Md., Inc. v. MCI WorldCom, Inc.*, 240 F.3d 279, 304 (4th Cir. 2001) ("The critical question is not whether State commissions have authority to interpret and enforce interconnection agreements – we believe they do"), *vacated on other grounds in Verizon Md., Inc. v. Pub. Serv. Comm'n of Md.*, 535 U.S. 65 (2002). *See also Core Commc'ns v. Verizon Pennsylvania, Inc.*, 493 F.3d 333, 342 n.7 (3rd Cir. 2007) ( "[E]very federal appellate court to consider the issue has determined or assumed that state commissions have authority to hear interpretation and enforcement actions regarding approved interconnection agreements").

(3) Find that Budget is liable to AT&T Tennessee for all amounts wrongfully withheld by it, including without limitation late payment charges and interest;

(4) Require Budget to pay AT&T Tennessee all amounts wrongfully withheld by it, including without limitation late payment charges and interest; and

(5) Grant AT&T Tennessee such additional relief as the Authority may deem just and proper.

Respectfully submitted,

BELLSOUTH TELECOMMUNICATIONS, INC.
dba AT&T SOUTHEAST dba AT&T TENNESSEE

By: Guy M. Hicks by CHanesworth w/permission

Guy M. Hicks
Joelle J. Phillips
333 Commerce Street, Suite 2101
Nashville, TN 37201-3300
615 214 6301
gh1402@att.com
jp3881@att.com

## CERTIFICATE OF SERVICE

I hereby certify that on January 8, 2010, a copy of the foregoing document was served on the following, via the method indicated:

[ ] Hand
[✓] Mail
[ ] Facsimile
[ ] Overnight
[ ] Electronic

Budget Prepay, Inc.
National Registered Agents, Inc.
2300 Hillsboro Road, Suite 305
Nashville, TN 37212

Carolyn Hanesworth

768535

## *Customer Name: Level 3 Communications, L.L.C.*


| | |
|---|---|
| Level 3 Communications, LLC Arbitration | 2 |
| Level 3-Amendment - Bill and Keep | 842 |
| Level 3 Communications, L.L.C. - LNP recovery Amen | 853 |
| Level 3 Communications, L.L.C. Attach 3-Extend Terms | 855 |
| Level 3 FL COL Vacated Elements Amendment | 857 |
| Level 3 Communications, L.L.C. AL COL1 Amendment | 904 |
| Level 3 Communications, L.L.C. SC Generic COL1 | 952 |
| Level 3 Communications, L.L.C. NC Generic COL1 | 1004 |
| Level 3 Communications, L.L.C. GA UNE Rate Remand1 | 1059 |
| Level 3 Communications GA COL Amendment | 1078 |
| Level 3 Communications - LA CoL Amendment | 1116 |
| Level 3 Communications - MS COL | 1151 |
| Level 3 - GA 271 Amendment | 1197 |
| Level 3 Kentucky COL Amendment | 1201 |
| Level 3 ICA Extnd Term - [AL,FL,GA,KY,LA,MS,NC,SC] | 1226 |
| Level 3 Tennessee_COL_and Ext Term ICA Amd | 1228 |
| Level 3 - Remove ISP Growth CAP Amd | 1252 |


Note: This page is not part of the actual signed contract/amendment, but is present for record keeping purposes only.

## Customer Name: Level 3 Communications, L.L.C.


| | |
|---|---|
| Level 3 Communications, LLC Arbitration | 2 |
| Table_of_Contents | 3 |
| General_Terms_and_Conditions | 5 |
| Signature_Page | 27 |
| Att 1 - Resale | 28 |
| Att_1_-_Resale_Discounts_and_Rates | 55 |
| Att_2__-__UNEs | 64 |
| Att_2_-_UNE_Rates | 125 |
| Att_3__-__Network_Interconnection | 473 |
| BellSouth Jurisdictional Factors Guide Version 5.0 Dec 2003 | 502 |
| Att_3_-_Local_Interconnection_Rates | 518 |
| Att 4 - Collocation | 527 |
| Att_4_-_Collocation_Rates | 568 |
| Att 5 - Access to Numbers and Number Portability | 606 |
| Att 6 - Ordering | 611 |
| Att_7__-__Billing- | 618 |
| Att_7_-_ODUF_ADUF_CMDS_Rates | 636 |
| Att_8_-_Rights_of_Way | 645 |
| Att_9_-_Perf_Meas_Intro | 647 |
| Att_9_-_Performance_Measurements | 649 |
| Att_10_-_Disaster_Recovery_Plan | 824 |
| Att 11 - BFR and NBR Process | 833 |


Note: This page is not part of the actual signed contract/amendment, but is present for record keeping purposes only.

**By and Between**

**BellSouth Telecommunications, Inc.**

**And**

**Level 3 Communications, L.L.C.**

# TABLE OF CONTENTS

**General Terms and Conditions**


Definitions
1. CLEC Certification
2. Term of the Agreement
3. Operational Support Systems
4. Parity
5. White Pages Listings
6. Court Ordered Requests for Call Detail Records and Other Subscriber Information
7. Liability and Indemnification
8. Intellectual Property Rights and Indemnification
9. Proprietary and Confidential Information
10. Resolution of Disputes
11. Taxes
12. Force Majeure
13. Adoption of Agreements
14. Modification of Agreement
15. Non-waiver of Legal Rights
16. Indivisibility
17. Waivers
18. Governing Law
19. Assignments
20. Notices
21. Rule of Construction
22. Headings of No Force or Effect
23. Multiple Counterparts
24. Filing of Agreement
25. Compliance with Applicable Law
26. Necessary Approvals
27. Good Faith Performance
28. Nonexclusive Dealings
29. Rate True-Up
30. Survival
31. Entire Agreement

# TABLE OF CONTENTS (cont'd)

**Attachment 1 - Resale**

**Attachment 2 - Network Elements and Other Services**

**Attachment 3 - Network Interconnection**

**Attachment 4 - Physical Collocation – Central Office**

**Attachment 5 - Access to Numbers and Number Portability**

**Attachment 6 – Pre-Ordering, Ordering, Provisioning, Maintenance and Repair**

**Attachment 7 - Billing**

**Attachment 8 - Rights-of-Way, Conduits and Pole Attachments**

**Attachment 9 - Performance Measurements**

**Attachment 10- BellSouth Disaster Recovery Plan**

**Attachment 11–Bona Fide Request and New Business Request Process**

# AGREEMENT
# GENERAL TERMS AND CONDITIONS

**THIS AGREEMENT** is made by and between BellSouth Telecommunications, Inc., (BellSouth), a Georgia corporation, and Level 3 Communications, LLC ("Level 3"), a Delaware limited liability company, and shall be effective on the Effective Date, as defined herein. This Agreement may refer to either BellSouth or Level 3 or both as a "Party" or "Parties."

## W I T N E S S E T H

**WHEREAS**, BellSouth is a local exchange telecommunications company authorized to provide telecommunications services in the states of Alabama, Florida, Georgia, Kentucky, Louisiana, Mississippi, North Carolina, South Carolina and Tennessee; and

**WHEREAS**, Level 3 is or seeks to become a CLEC authorized to provide telecommunications services in the states of Alabama, Florida, Georgia, Kentucky, Louisiana, Mississippi, North Carolina, South Carolina, and Tennessee; and

**WHEREAS**, Level 3 wishes to resell BellSouth's telecommunications services and purchase network elements and other services, and, solely in connection therewith, may wish to utilize collocation space as set forth in Attachment 4 of this Agreement; and

**WHEREAS**, the Parties wish to interconnect their facilities and exchange traffic pursuant to Sections 251 and 252 of the Act.

**NOW THEREFORE**, in consideration of the mutual agreements contained herein, BellSouth and Level 3 agree as follows:

### Definitions

In the event a modification occurs pursuant to an effective change in law to the definitions set forth below in this Agreement during the term of this Agreement, the Parties will modify the Agreement as provided forth in Section 14.3 of the Agreement.

**Affiliate** is defined as a person that (directly or indirectly) owns or controls, is owned or controlled by, or is under common ownership or control with, another person. For purposes of this paragraph, the term "own" means to own an equity interest (or equivalent thereof) of more than 10 percent.

**Commission** is defined as the appropriate regulatory agency in each state of BellSouth's nine-state region (Alabama, Florida, Georgia, Kentucky, Louisiana, Mississippi, North Carolina, South Carolina, and Tennessee).

**Competitive Local Exchange Carrier (CLEC)** means a telephone company certificated by the Commission to provide local exchange service within BellSouth's franchised area.

**Effective Date** is defined as the date that the Agreement is effective for purposes of rates, terms and conditions and shall be thirty (30) days after the date of the last signature executing the Agreement. Future amendments for rate changes will also be effective thirty (30) days after the date of the last signature executing the amendment.

**End User** means the ultimate user of the Telecommunications Service.

**FCC** means the Federal Communications Commission.

**General Terms and Conditions** means this document including all of the terms, provisions and conditions set forth herein.

**Telecommunications** means the transmission, between or among points specified by the user, of information of the user's choosing, without change in the form or content of the information as sent and received.

**Telecommunications Service** means the offering of telecommunications for a fee directly to the public, or to such classes of users as to be effectively available directly to the public, regardless of the facilities used

**Telecommunications Act of 1996 (Act)** means Public Law 104-104 of the United States Congress effective February 8, 1996. The Act amended the Communications Act of 1934 (47 U.S.C. Section 1 et. seq.).

## 1. CLEC Certification

1.1 Prior to execution of this Agreement, Level 3 agrees to provide BellSouth in writing Level 3's CLEC certification for all states covered by this Agreement except Kentucky prior to BellSouth filing this Agreement with the appropriate Commission for approval. If at the time of the filing of this Agreement, Level 3 has previously provided such information for those states where the Parties have operated under a prior interconnection agreement, Level 3 will not have to provide such information again.

1.2 To the extent Level 3 is not certified as a CLEC in each state covered by this Agreement as of the execution hereof, Level 3 will notify BellSouth in writing and provide CLEC certification when it becomes certified to operate in any other state covered by this Agreement. Upon notification, BellSouth will file this Agreement with the appropriate Commission for approval.

## 2. Term of the Agreement

2.1 The term of this Agreement shall be three years, beginning on the Effective Date and shall apply to the BellSouth territory in the state(s) of Alabama, Florida, Georgia, Kentucky, Louisiana, Mississippi, North Carolina, South Carolina and Tennessee. Notwithstanding any prior agreement of the Parties, the rates, terms and conditions of this Agreement shall not be applied retroactively prior to the Effective Date.

2.2 The Parties agree that by no earlier than two hundred seventy (270) days and no later than one hundred and eighty (180) days prior to the expiration of this Agreement, either Party may provide notice of intent to renegotiate, and the Parties shall commence negotiations for a new agreement to be effective beginning on the expiration date of this Agreement (Subsequent Agreement).

2.3 If, within one hundred and thirty-five (135) days of commencing the negotiation referred to in Section 2.2 above, the Parties are unable to negotiate new terms, conditions and prices for a Subsequent Agreement, either Party may petition the Commission to establish appropriate terms, conditions and prices for the Subsequent Agreement pursuant to 47 U.S.C. 252.

2.4 If, as of the expiration of this Agreement, a Subsequent Agreement has not been executed by the Parties, and the Parties are not yet in arbitration, this Agreement shall continue on a month-to-month basis while a Subsequent Agreement is actively being negotiated in good faith or alternatively, a timely petition has been filed with the respective state public service commission and the Subsequent Agreement is subject to the respective state Commission arbitration pursuant to 252 of the Act. Upon conversion to a month-to-month term, during such negotiations, provided that the Parties are not in arbitration, then either Party, in its discretion, may terminate this Agreement upon sixty (60) days written notice to the other Party. Notwithstanding the foregoing, the Agreement cannot be terminated prior to 180 days after the original expiration date. In the event that BellSouth terminates this Agreement as provided herein, BellSouth shall continue to provide services to Level 3 pursuant to (1) the terms, conditions and rates set forth in BellSouth's standard interconnection agreement then in effect and made available to CLECs requesting negotiations pursuant to Section 251 of the Act, or (2) an agreement adopted by Level 3 pursuant to Section 13 of this Agreement. Neither Party shall refuse to provide services to the other Party during the negotiation of the Subsequent Agreement or the transition from this Agreement to the Subsequent Agreement.

2.5 In the event that BellSouth's standard interconnection agreement, or an agreement adopted by Level 3 under Section 13 becomes effective between the Parties, the Parties may continue to negotiate a Subsequent Agreement or arbitrate disputed issues to reach a Subsequent Agreement as set forth in Section 2.3 above, and the terms of such Subsequent Agreement shall be effective as of the effective date stated in such Subsequent Agreement and shall not be applied retroactively to the expiration date of this Agreement unless the Parties agree otherwise.

**3. Operational Support Systems**

Level 3 shall pay charges for Operational Support Systems (OSS) as set forth in this Agreement.

**4. Parity**

When Level 3 purchases Telecommunications Services from BellSouth pursuant to Attachment 1 of this Agreement for the purposes of resale to End Users, such services shall be equal in quality, subject to the same conditions, and provided within the same provisioning time intervals that BellSouth provides to its Affiliates, subsidiaries and End Users. To the extent technically feasible, the quality of a Network Element, as well as the quality of the access to such Network Element provided by BellSouth to Level 3 shall be at least equal in quality to that which BellSouth provides to itself, its Affiliates or any other Telecommunications carrier. The quality of the interconnection between the network of BellSouth and the network of Level 3 shall be at a level that is equal to that which BellSouth provides itself, a subsidiary, an Affiliate, or any other party. The interconnection facilities shall be designed to meet the same technical criteria and service standards that are used within BellSouth's network and shall extend to a consideration of service quality as perceived by BellSouth's End Users and service quality as perceived by Level 3.

Not withstanding anything to the contrary in this Agreement, in the event of a conflict between applicable law and a BellSouth Technical Reference (TR), Level 3 reserves the right to dispute under the resolution of disputes procedures contained in Section 10 of the General Terms and Conditions.

**5. White Pages Listings**

5.1 BellSouth shall provide Level 3 and its customers access to white pages directory listings under the following terms:

5.1.1 Listings. Level 3 shall provide all new, changed and deleted listings on a timely basis and BellSouth or its agent will include Level 3 residential and business customer listings in the appropriate White Pages (residential and business) or alphabetical directories in the geographic areas covered by this Interconnection Agreement, in parity with BellSouth's own customer listings. As such, Directory listings will make no distinction between Level 3 and BellSouth subscribers.

5.1.2 Rates. So long as Level 3 provides subscriber listing information (SLI) to BellSouth in accordance with Section 5.2 below, BellSouth shall provide to Level 3 one (1) primary White Pages listing per Level 3 subscriber at no charge other than applicable service order charges as set forth in BellSouth's tariffs.

5.2 Procedures for Submitting Level 3 SLI are found in The BellSouth Business Rules for Local Ordering available on the BellSouth website at: www.interconnection.bellsouth.com.

5.2.1 Level 3 authorizes BellSouth to release all Level 3 SLI provided to BellSouth by Level 3 to qualifying Directory Publishers via either license agreement or BellSouth's Directory Publishers Database Service (DPDS), General Subscriber Services Tariff (GSST), Section A38.2, as the same may be amended from time to time. Such Level 3 SLI shall be intermingled with BellSouth's own customer listings and listings of any other CLEC that has authorized a similar release of SLI.

5.2.2 So long as Level 3 provides subscriber listing information (SLI) to BellSouth in accordance with Section 5.2 above, BellSouth will not charge Level 3 for the release of Level 3's SLI to Directory Publishers. Rather, BellSouth will recover the cost of providing Level 3's SLI to Directory Publishers from the requesting Directory Publisher.

No compensation shall be paid to Level 3 for BellSouth's receipt of Level 3 SLI, or the subsequent release to Directory Publishers of such SLI. In addition, to the extent BellSouth incurs costs to modify its systems to enable the release of Level 3's SLI, or costs on an ongoing basis to administer the release of Level 3 SLI, Level 3 shall pay to BellSouth its proportionate share of the reasonable costs associated therewith. At any time that costs may be incurred to administer the release of Level 3's SLI, Level 3 will be notified. If Level 3 does not wish to pay its proportionate share of these reasonable costs, Level 3 may instruct BellSouth that it does not wish to release its SLI to independent publishers, and Level 3 shall amend this Agreement accordingly. Level 3 will be liable for all costs incurred until the effective date of the amendment

5.2.3 Neither BellSouth nor any agent shall be liable for the content or accuracy of any SLI provided by Level 3 under this Agreement, except where the inaccuracy is due to the willful misconduct or gross negligence of BellSouth or its agent arising after the SLI was provided by Level 3. Except as otherwise provided, BellSouth will forward to Level 3 any complaints received by BellSouth relating to the accuracy or quality of Level 3 listings.

5.2.4 Listings and subsequent updates will be released consistent with BellSouth system changes and/or update scheduling requirements.

5.3 Unlisted/Non-Published Subscribers. Level 3 will be required to provide to BellSouth the names, addresses and telephone numbers of all Level 3 customers who wish to be omitted from directories. Unlisted/Non-Published SLI will be subject to the rates as set forth in BellSouth's GSST.

5.4 Inclusion of Level 3 End Users in Directory Assistance Database. BellSouth will include and maintain Level 3 subscriber listings in BellSouth's Directory Assistance databases at no recurring charge and Level 3 shall provide such Directory Assistance listings to BellSouth at no recurring charge.

5.5 Listing Information Confidentiality. BellSouth will afford Level 3's directory listing information the same level of confidentiality that BellSouth affords its own

directory listing information, and BellSouth shall limit Level 3's customer proprietary confidential directory information to the appropriate BellSouth employees.

5.6 Additional and Designer Listings. Additional and designer listings will be offered by BellSouth at tariffed rates as set forth in the General Subscriber Services Tariff.

5.7 Directories. BellSouth or its agent shall deliver White Pages directories to Level 3 subscribers at no charge and in the same manner, time and quantity as it provides its own customers.

## 6. Court Ordered Requests for Call Detail Records and Other Subscriber Information

6.1 Subpoenas Directed to BellSouth. Where BellSouth provides resold services or local switching for Level 3, BellSouth shall respond to subpoenas and court ordered requests delivered directly to BellSouth for the purpose of providing call detail records when the targeted telephone numbers belong to Level 3 End Users. Billing for such requests will be generated by BellSouth and directed to the law enforcement agency initiating the request. BellSouth shall maintain such information for Level 3 End Users for the same length of time it maintains such information for its own End Users.

6.2 Subpoenas Directed to Level 3. Where BellSouth is providing to Level 3 Telecommunications Services for resale or providing to Level 3 the local switching function, then Level 3 agrees that in those cases where Level 3 receives subpoenas or court ordered requests regarding targeted telephone numbers belonging to Level 3 End Users, and where Level 3 does not have the requested information, Level 3 will advise the law enforcement agency initiating the request to redirect the subpoena or court ordered request to BellSouth for handling in accordance with 6.1 above.

6.3 In all other instances, where either Party receives a request for information involving the other Party's End User, the Party receiving the request will advise the law enforcement agency initiating the request to redirect such request to the other Party.

## 7. Liability and Indemnification

7.1 Level 3 Liability. In the event that Level 3 consists of two (2) or more separate entities that order, purchase or otherwise provide services, or products, or have obligations under this Agreement and/or any Amendments hereto, all such entities shall be jointly and severally liable for the obligations of Level 3 under this Agreement.

7.2 Liability for Acts or Omissions of Third Parties. Neither BellSouth nor Level 3 shall be liable for any act or omission of another telecommunications company providing services to either Party.

7.3 Limitation of Liability

7.3.1 Except for any indemnification obligations of the Parties hereunder, or except in the case of gross negligence or willful misconduct, each Party's liability to the other for any loss, cost, claim, injury, liability or expense, including reasonable attorneys' fees relating to or arising out of any negligent act or omission in its performance of this Agreement, whether in contract or in tort, shall be limited to a credit for the actual cost of the services or functions not performed or improperly performed.

7.3.2 Limitations in Tariffs and Contracts. A Party may, in its sole discretion, provide in its tariffs and contracts with its End Users and third parties that relate to any service, product or function provided or contemplated under this Agreement, that to the maximum extent permitted by Applicable Law, such Party shall not be liable to the End User or third party for (i) any loss relating to or arising out of this Agreement, whether in contract, tort or otherwise, that exceeds the amount such Party would have charged that applicable person for the service, product or function that gave rise to such loss and (ii) consequential damages. To the extent that a Party elects not to place in its tariffs or contracts such limitations of liability, and the other Party incurs a loss as a result thereof, such Party shall indemnify and reimburse the other Party for that portion of the loss that would have been limited had the first Party included in its tariffs and contracts the limitations of liability that such other Party included in its own tariffs at the time of such loss. Any such tariff term or condition shall not contradict or modify the obligations of the Parties to each other under this Agreement. In the event a term of the tariff conflicts with a term in this Agreement, this Agreement shall control.

7.3.3 Neither BellSouth nor Level 3 shall be liable for damages to the other Party's terminal location, equipment or End User premises resulting from the furnishing of a service, including, but not limited to, the installation and removal of equipment or associated wiring, except to the extent caused by a Party's negligence or willful misconduct or by a Party's failure to ground properly a local loop after disconnection.

7.3.4 Except in the case of willful misconduct or gross negligence, under no circumstance shall a Party be responsible or liable for indirect, incidental, or consequential damages, including, but not limited to, economic loss or lost business or profits, damages arising from the use or performance of equipment or software, or the loss of use of software or equipment, or accessories attached thereto, delay, error, or loss of data. In connection with this limitation of liability, each Party recognizes that the other Party may, from time to time, provide advice, make recommendations, or supply other analyses related to the services or facilities described in this Agreement, and, while each Party shall use diligent

efforts in this regard, the Parties acknowledge and agree that this limitation of liability shall apply to provision of such advice, recommendations, and analyses.

7.3.5 To the extent any specific provision of this Agreement purports to impose liability, or limitation of liability, on either Party different from or in conflict with the liability or limitation of liability set forth in this Section, then with respect to any facts or circumstances covered by such specific provisions, the liability or limitation of liability contained in such specific provision shall apply.

7.4 Indemnification for Certain Claims. The Party providing services hereunder, its Affiliates and its parent company, shall be indemnified, defended and held harmless by the Party receiving services hereunder against any claim, loss or damage arising from the receiving Party's use of the services provided under this Agreement pertaining to (1) claims for libel, slander or invasion of privacy arising from the content of the receiving Party's own communications, or (2) any claim, loss or damage claimed by the End User of the Party receiving services arising from such company's use or reliance on the providing Party's services, actions, duties, or obligations arising out of this Agreement.

7.5 Disclaimer. EXCEPT AS SPECIFICALLY PROVIDED TO THE CONTRARY IN THIS AGREEMENT, NEITHER PARTY MAKES ANY REPRESENTATIONS OR WARRANTIES TO THE OTHER PARTY CONCERNING THE SPECIFIC QUALITY OF ANY SERVICES, OR FACILITIES PROVIDED UNDER THIS AGREEMENT. THE PARTIES DISCLAIM, WITHOUT LIMITATION, ANY WARRANTY OR GUARANTEE OF MERCHANTABILITY OR FITNESS FOR A PARTICULAR PURPOSE, ARISING FROM COURSE OF PERFORMANCE, COURSE OF DEALING, OR FROM USAGES OF TRADE.

## 8. Intellectual Property Rights and Indemnification

8.1 No License. No patent, copyright, trademark or other proprietary right is licensed, granted or otherwise transferred by this Agreement. The Parties are strictly prohibited from any use, including but not limited to, in the selling, marketing, promoting or advertising of telecommunications services, of any name, service mark, logo or trademark (collectively, the "Marks") of the Other Party. The Marks include those Marks owned directly by a Party or its Affiliate(s) and those Marks that a Party has a legal and valid license to use. The Parties acknowledge that they are separate and distinct and that each provides a separate and distinct service and agree that neither Party may, expressly or impliedly, state, advertise or market that it is or offers the same service as the Other Party or engage in any other activity that may result in a likelihood of confusion between its own service and the service of the Other Party.

8.2 Ownership of Intellectual Property. Any intellectual property that originates from or is developed by a Party shall remain the exclusive property of that Party. Except for a limited, non-assignable, non-exclusive, non-transferable license to

use patents or copyrights to the extent necessary for the Parties to use any facilities or equipment (including software) or to receive any service solely as provided under this Agreement, no license in patent, copyright, trademark or trade secret, or other proprietary or intellectual property right, now or hereafter owned, controlled or licensable by a Party, is granted to the other Party. Neither shall it be implied nor arise by estoppel. Any trademark, copyright or other proprietary notices appearing in association with the use of any facilities or equipment (including software) shall remain on the documentation, material, product, service, equipment or software. It is the responsibility of each Party to ensure at no additional cost to the other Party that it has obtained any necessary licenses in relation to intellectual property of third Parties used in its network that may be required to enable the other Party to use any facilities or equipment (including software), to receive any service, or to perform its respective obligations under this Agreement.

8.3 Intellectual Property Remedies

8.3.1 Indemnification. The Party providing a service pursuant to this Agreement will defend the Party receiving such service or data provided as a result of such service against claims of infringement arising solely from the use by the receiving Party of such service in the manner contemplated under this Agreement and will indemnify the receiving Party for any damages awarded based solely on such claims in accordance with Section 7 preceding.

8.3.2 Claim of Infringement. In the event that use of any facilities or equipment (including software), becomes, or in the reasonable judgment of the Party who owns the affected network is likely to become, the subject of a claim, action, suit, or proceeding based on intellectual property infringement, then said Party shall promptly and at its sole expense and sole option, but subject to the limitations of liability set forth below:

8.3.2.1 modify or replace the applicable facilities or equipment (including software) while maintaining form and function, or

8.3.2.2 obtain a license sufficient to allow such use to continue.

8.3.2.3 In the event Section 8.3.2.1 or 8.3.2.2 are commercially unreasonable after the exercise of best efforts over a reasonable period of time, then said Party may terminate, upon reasonable notice, the use of, or services provided through use of, the affected facilities or equipment (including software), but solely to the extent required to avoid the infringement claim.

8.3.3 Exception to Obligations. Neither Party's obligations under this Section shall apply to the extent the infringement is caused by: (i) modification of the facilities or equipment (including software) by the indemnitee; (ii) use by the indemnitee of the facilities or equipment (including software) in combination with equipment or facilities (including software) not provided or authorized by the indemnitor,

provided the facilities or equipment (including software) would not be infringing if used alone; (iii) conformance to specifications of the indemnitee which would necessarily result in infringement; or (iv) continued use by the indemnitee of the affected facilities or equipment (including software) after being placed on notice to discontinue use as set forth herein.

8.3.4 Exclusive Remedy. The foregoing shall constitute the Parties' sole and exclusive remedies and obligations with respect to a third party claim of intellectual property infringement arising out of the conduct of business under this Agreement.

8.4 Dispute Resolution. Any claim arising under this Section 8 shall be excluded from the dispute resolution procedures set forth in Section 10 and shall be brought in a court of competent jurisdiction.

## 9. Proprietary and Confidential Information

9.1 Proprietary and Confidential Information. It may be necessary for BellSouth and Level 3, each as the "Discloser," to provide to the other Party, as "Recipient," certain proprietary and confidential information (including trade secret information) including but not limited to technical, financial, marketing, staffing and business plans and information, strategic information, proposals, request for proposals, specifications, drawings, maps, prices, costs, costing methodologies, procedures, processes, business systems, software programs, techniques, customer account data, call detail records and like information (collectively the "Information"). All such Information conveyed in writing or other tangible form shall be clearly marked with a confidential or proprietary legend. Information conveyed orally by the Discloser to Recipient shall be designated as proprietary and confidential at the time of such oral conveyance, shall be reduced to writing by the Discloser within forty-five (45) days thereafter, and shall be clearly marked with a confidential or proprietary legend.

9.2 Use and Protection of Information. Recipient agrees to protect such Information of the Discloser provided to Recipient from whatever source from distribution, disclosure or dissemination to anyone except employees of Recipient with a need to know such Information solely in conjunction with Recipient's analysis of the Information and for no other purpose except as authorized herein or as otherwise authorized in writing by the Discloser. Recipient may also provide Information to its attorneys and consultants, provided that the individual attorneys or consultants agree to be bound by the confidentiality provisions of this Agreement as agents of the Recipient under this Agreement. Recipient will not make any copies of the Information inspected by it. BellSouth and Level 3 will use the same standard of care to protect Information received as they would use to protect their own confidential and proprietary Information.

9.3 Exceptions. Recipient will not have an obligation to protect any portion of the Information which:

9.3.1 (a) is made publicly available by the Discloser or lawfully by a nonparty to this Agreement; (b) is lawfully obtained by Recipient from any source other than Discloser who has the legal authority to possess and disclose the Information; (c) is previously known to Recipient without an obligation to keep it confidential; or (d) is released from the terms of this Agreement by Discloser upon written notice to Recipient.

9.4 Recipient agrees to use the Information solely for the purposes of negotiations pursuant to 47 U.S.C. 251 or in performing its obligations under this Agreement and for no other entity or purpose, except as may be otherwise agreed to in writing by the Parties. Nothing herein shall prohibit Recipient from providing information requested by the FCC or a state regulatory agency with jurisdiction over this matter, or to support a request for arbitration or an allegation of failure to negotiate in good faith; Recipient will give notice as required by the state or federal rules or by regulatory agency rules/requirements, or if there is no requirement, in a commercially reasonable time.

9.5 Recipient agrees not to publish or use the Information for any advertising, sales or marketing promotions, press releases, or publicity matters that refer either directly or indirectly to the Information or to the Discloser or any of its affiliated companies.

9.6 The disclosure of Information neither grants nor implies any license to the Recipient under any trademark, patent, copyright, application or other intellectual property right that is now or may hereafter be owned by the Discloser.

9.7 Survival of Confidentiality Obligations. The Parties' rights and obligations under this Section 9 shall survive and continue in effect until two (2) years after the expiration or termination date of this Agreement with regard to all Information exchanged during the term of this Agreement. Thereafter, the Parties' rights and obligations hereunder survive and continue in effect with respect to any Information that is a trade secret under applicable law.

9.8 Each Party shall comply with rules regarding the use of Customer Proprietary Network Information (as that term is described in the Act) as set forth in Section 222 of the Act and in effective and applicable FCC rules and orders.

**10. Resolution of Disputes**

10.1 Except for procedures that outline the resolution of billing disputes which are set forth in Section 2 of Attachment 7, each Party agrees to notify the other Party in writing of a dispute concerning this Agreement. If the Parties are unable to resolve the issues relating to the dispute in the normal course of business within thirty (30) days after delivery of notice of the dispute, each of the parties shall appoint a designated representative who has authority to settle the dispute and who is at a higher level of management than the persons with direct responsibility

for administration of this Agreement. The designated representatives shall meet as often as they reasonably deem necessary in order to discuss the dispute and negotiate in good faith in an effort to resolve such dispute

10.2 If the Parties are unable to resolve issues related to the dispute within thirty (30) days after the Parties' appointment of designated representatives pursuant to Section 10.1, then either Party may file a complaint with the Commission to resolve such issues, or as explicitly otherwise provided for in this Agreement, may proceed with any other remedy pursuant to law or equity.

10.3 Except as otherwise stated in this Agreement, or for such matters which lie outside the jurisdiction or expertise of the Commission or FCC, if any dispute arises as to the enforcement of terms and conditions of this Agreement, and/or as to the interpretation of any provision of this Agreement, the aggrieved party, to the extent seeking resolution of such dispute, must seek such resolution before the Commission or the FCC in accordance with the Act. Each Party reserves any rights it may have to seek judicial review of any ruling made by the Commission concerning this Agreement. Either Party may seek expedited resolution by the Commission. During the Commission preceding each Party shall continue to perform its obligations under this Agreement; provided, however, that neither Party shall be required to act in an unlawful fashion.

10.4 Except to the extent the Commission is authorized to grant temporary equitable relief with respect to a dispute arising as to the enforcement of terms and conditions of this Agreement, and/or as to the interpretation of any provision of this Agreement, this Section 10 shall not prevent either Party from seeking any temporary equitable relief, including a temporary restraining order, in a court of competent jurisdiction.

10.5 In addition to Sections 10.1 and 10.2 above, each Party shall have the right to seek legal and equitable remedies on any and all legal and equitable theories in any court of competent jurisdiction for any and all claims, causes of action, or other proceedings not arising: (i) as to the enforcement of any provision of this Agreement, or (ii) as to the enforcement or interpretation under applicable federal or state telecommunications law. Moreover, if the Commission would not have authority to grant an award of damages after issuing a ruling finding fault or liability in connection with a dispute under this Agreement, either Party may pursue such award in any court of competent jurisdiction after such Commission finding.

## 11. Taxes

11.1 Definition. For purposes of this Section, the terms "taxes" and "fees" shall include but not be limited to federal, state or local sales, use, excise, gross receipts or other taxes or tax-like fees of whatever nature and however designated (including tariff surcharges and any fees, charges or other payments, contractual or otherwise, for the use of public streets or rights of way, whether

designated as franchise fees or otherwise) imposed, or sought to be imposed, on or with respect to the services furnished hereunder or measured by the charges or payments therefore, excluding any taxes levied on income or real or personal property.

11.2 Taxes and Fees Imposed Directly On Either Providing Party or Purchasing Party.

11.2.1 Taxes and fees imposed on the providing Party, which are not permitted or required to be passed on by the providing Party to its customer, shall be borne and paid by the providing Party.

11.2.2 Taxes and fees imposed on the purchasing Party, which are not required to be collected and/or remitted by the providing Party, shall be borne and paid by the purchasing Party.

11.3 Taxes and Fees Imposed on Purchasing Party But Collected And Remitted By Providing Party.

11.3.1 Taxes and fees imposed on the purchasing Party shall be borne by the purchasing Party, even if the obligation to collect and/or remit such taxes or fees is placed on the providing Party.

11.3.2 To the extent permitted by applicable law, any such taxes and/or fees shall be shown as separate items on applicable billing documents between the Parties. Each Party will use its best efforts to ensure that any such taxes or fees are billed or presented in a timely manner. Notwithstanding the foregoing, the purchasing Party shall remain liable for any such taxes and fees regardless of whether they are actually billed by the providing Party at the time that the respective service is billed.

11.3.3 If the purchasing Party determines that in its opinion any such taxes or fees are not payable, the providing Party shall not bill such taxes or fees to the purchasing Party if the purchasing Party provides written certification, reasonably satisfactory to the providing Party, stating that it is exempt or otherwise not subject to the tax or fee, setting forth the basis therefore, and satisfying any other requirements under applicable law. If any authority seeks to collect any such tax or fee that the purchasing Party has determined and certified not to be payable, or any such tax or fee that was not billed by the providing Party, the purchasing Party may contest the same in good faith, at its own expense. In any such contest, the purchasing Party shall promptly furnish the providing Party with copies of all filings in any proceeding, protest, or legal challenge, all rulings issued in connection therewith, and all correspondence between the purchasing Party and the taxing authority.

11.3.4 In the event that all or any portion of an amount sought to be collected must be paid in order to contest the imposition of any such tax or fee, or to avoid the existence of a lien on the assets of the providing Party during the pendency of such contest, the purchasing Party shall be responsible for such payment and shall be entitled to the benefit of any refund or recovery.

11.3.5 If it is ultimately determined that any additional amount of such a tax or fee is due to the imposing authority, the purchasing Party shall pay such additional amount, including any interest and penalties thereon.

11.3.6 Notwithstanding any provision to the contrary, the purchasing Party shall protect, indemnify and hold harmless (and defend at the purchasing Party's expense) the providing Party from and against any such tax or fee, interest or penalties thereon, or other charges or payable expenses (including reasonable attorney fees) with respect thereto, which are incurred by the providing Party in connection with any claim for or contest of any such tax or fee.

11.3.7 Each Party shall notify the other Party in writing of any assessment, proposed assessment or other claim for any additional amount of such a tax or fee by a taxing authority; such notice to be provided, if possible, at least ten (10) days prior to the date by which a response, protest or other appeal must be filed, but in no event later than thirty (30) days after receipt of such assessment, proposed assessment or claim.

11.4 Taxes and Fees Imposed on Providing Party But Passed On To Purchasing Party.

11.4.1 Taxes and fees imposed on the providing Party, which are permitted or required to be passed on by the providing Party to its customer, shall be borne by the purchasing Party.

11.4.2 To the extent permitted by applicable law, any such taxes and/or fees shall be shown as separate items on applicable billing documents between the Parties. Each Party will use its best efforts to ensure that any such taxes or fees are billed or presented in a timely manner. Notwithstanding the foregoing, the purchasing Party shall remain liable for any such taxes and fees regardless of whether they are actually billed by the providing Party at the time that the respective service is billed.

11.4.3 If the purchasing Party disagrees with the providing Party's determination as to the application or basis for any such tax or fee, the Parties shall consult with respect to the imposition and billing of such tax or fee. If, after consultation in accordance with the preceding sentence, the purchasing Party does not agree with the providing Party's final determination as to the application or basis of a particular tax or fee, and if the providing Party, after receipt of a written request by the purchasing Party to contest the imposition of such tax or fee with the imposing authority, fails or refuses to pursue such contest or to allow such contest by the purchasing Party, the purchasing Party may utilize the dispute resolution process outlined in this Agreement. Utilization of the dispute resolution process shall not relieve the purchasing Party from liability for any tax or fee billed by the providing Party pursuant to this subsection during the pendency of such dispute resolution proceeding. In the event that the purchasing Party prevails in such dispute resolution proceeding, it shall be entitled to a refund in accordance with the final

decision therein. Notwithstanding the foregoing, if at any time prior to a final decision in such dispute resolution proceeding the providing Party initiates a contest with the imposing authority with respect to any of the issues involved in such dispute resolution proceeding, the dispute resolution proceeding shall be dismissed as to such common issues and the final decision rendered in the contest with the imposing authority shall control as to such issues

11.4.4 In the event that all or any portion of an amount sought to be collected must be paid in order to contest the imposition of any such tax or fee, or to avoid the existence of a lien on the assets of the providing Party during the pendency of such contest, the purchasing Party shall be responsible for such payment and shall be entitled to the benefit of any refund or recovery.

11.4.5 If it is ultimately determined that any additional amount of such a tax or fee is due to the imposing authority, the purchasing Party shall pay such additional amount, including any interest and penalties thereon.

11.4.6 Notwithstanding any provision to the contrary, the purchasing Party shall protect, indemnify and hold harmless (and defend at the purchasing Party's expense) the providing Party from and against any such tax or fee, interest or penalties thereon, or other reasonable charges or payable expenses (including reasonable attorneys' fees) with respect thereto, which are incurred by the providing Party in connection with any claim for or contest of any such tax or fee.

11.4.7 Each Party shall notify the other Party in writing of any assessment, proposed assessment or other claim for any additional amount of such a tax or fee by a taxing authority; such notice to be provided, if possible, at least ten (10) days prior to the date by which a response, protest or other appeal must be filed, but in no event later than thirty (30) days after receipt of such assessment, proposed assessment or claim.

11.5 Mutual Cooperation. In any contest of a tax or fee by one Party, the other Party shall cooperate fully by providing records, testimony and such additional information or assistance as may reasonably be necessary to pursue the contest. Further, the other Party shall be reimbursed for any reasonable and necessary out-of-pocket copying and travel expenses incurred in assisting in such contest to the extent such assistance is expressly sought by the first Party.

**12. Force Majeure**

In the event performance of this Agreement, or any obligation hereunder, is either directly or indirectly prevented, restricted, or interfered with by reason of fire, flood, earthquake or like acts of God, wars, revolution, civil commotion, explosion, acts of public enemy, embargo, acts of the government in its sovereign capacity, labor difficulties, including without limitation, strikes, slowdowns, picketing, or boycotts, unavailability of equipment from vendor, , or any other circumstances beyond the reasonable control and without the fault or negligence of the Party affected, the Party affected, upon giving prompt notice to the other

Party, shall be excused from such performance on a day-to-day basis to the extent of such prevention, restriction, or interference (and the other Party shall likewise be excused from performance of its obligations on a day-to-day basis until the delay, restriction or interference has ceased); provided, however, that the Party so affected shall use diligent efforts to avoid or remove such causes of non-performance and both Parties shall proceed whenever such causes are removed or cease. Each Party agrees to act in a nondiscriminatory manner with regard to a Force Majeure event.

**13. Adoption of Agreements**

BellSouth shall make available, pursuant to 47 USC § 252 and the FCC rules and regulations regarding such availability, to Level 3 any interconnection, service, or network element provided under any other agreement filed and approved pursuant to 47 USC § 252, provided a minimum of six months remains on the term of such agreement. The Parties shall adopt all rates, terms and conditions concerning such other interconnection, service or network element and any other rates, terms and conditions that are legitimately related to or were negotiated in exchange for or in conjunction with the interconnection, service or network element being adopted. The adopted interconnection, service, or network element and agreement shall apply to the same states as such other agreement. The term of the adopted agreement or provisions shall expire on the same date as set forth in the agreement that was adopted.

**14. Modification of Agreement**

14.1 If either Party changes its name or makes changes to its company structure or identity due to a merger, acquisition, transfer or any other reason, it is the responsibility of that Party to notify the other Party in writing of said change and request that an amendment to this Agreement, if necessary, be executed to reflect said change.

14.2 No modification, amendment, supplement to, or waiver of the Agreement or any of its provisions shall be effective and binding upon the Parties unless it is made in writing and duly signed by the Parties.

14.3 In the event that any effective legislative, regulatory, judicial or other legal action materially affects any material terms of this Agreement including, but not limited to, BellSouth practices or procedures, or the ability of Level 3 or BellSouth to perform any material terms of this Agreement, Level 3 or BellSouth may, on thirty (30) days' written notice, require that such terms be renegotiated, and the Parties shall renegotiate in good faith such mutually acceptable new terms as may be required. In the event that such new terms are not renegotiated within ninety (90) days after such notice, the Dispute shall be referred to the Dispute Resolution procedure set forth in this Agreement.

**15. Non-waiver of Legal Rights**

Execution of this Agreement by either Party does not confirm or imply that the executing Party agrees with any decision(s) issued pursuant to the Telecommunications Act of 1996 and the consequences of those decisions on specific language in this Agreement. Neither Party waives its rights to appeal or otherwise challenge any such decision(s) and each Party reserves all of its rights to pursue any and all legal and/or equitable remedies, including appeals of any such decision(s).

## 16. Indivisibility and Severability

16.1 Subject to Section 13 (Adoption of Agreements) and Section 14 (Modification of Agreement) of this Agreement, except as set forth below in Section 16.2 (Severability), the Parties intend that this Agreement be indivisible and nonseverable. Without limiting the generality of the foregoing, each of the Parties acknowledges that any provision by BellSouth of collocation space under this Agreement is solely for the purpose of facilitating the provision of other services under this Agreement and that neither Party would have contracted with respect to the provisioning of collocation space under this Agreement if the covenants and promises of the other Party with respect to the other services provided under this Agreement had not been made. The Parties further acknowledge that this Agreement is intended to constitute a single transaction, that the obligations of the Parties under this Agreement are interdependent, and that payment obligations under this Agreement are intended to be recouped against other payment obligations under this Agreement.

16.2 **Severability**

Notwithstanding the foregoing, if any part of this Agreement is held to be invalid for any reason, such invalidity shall affect only the portion of the Agreement which has been held invalid. In all other respects this Agreement shall stand as if such invalid provision has not been a part thereof, and the remainder of the Agreement shall remain in full force and effect.

## 17. Waivers

A failure or delay of either Party to enforce any of the provisions hereof, to exercise any option which is herein provided, or to require performance of any of the provisions hereof shall in no way be construed to be a waiver of such provisions or options, and each Party, notwithstanding such failure, shall have the right thereafter to insist upon the performance of any and all of the provisions of this Agreement.

## 18. Governing Law

Where applicable, this Agreement shall be governed by and construed in accordance with federal and state substantive telecommunications law, including rules and regulations of the FCC and appropriate Commission. In all other respects, this Agreement shall be governed by and construed and enforced in

accordance with the laws of the State of Georgia without regard to its conflict of laws principles.

**19. Assignments**

Any assignment by either Party to any non-affiliated entity of any right, obligation or duty, or of any other interest hereunder, in whole or in part, without the prior written consent of the other Party shall be void. A Party may assign this Agreement in its entirety to an Affiliate of the Party without the consent of the other Party; provided, however, that the assigning Party shall notify the other Party in writing of such assignment thirty (30) days prior to the Effective Date thereof and, provided further, if the assignee is an assignee of Level 3, the assignee must provide evidence of Commission CLEC certification The Parties shall amend this Agreement to reflect such assignments and shall work cooperatively to implement any changes required due to such assignment. All obligations and duties of any Party under this Agreement shall be binding on all successors in interest and assigns of such Party. No assignment or delegation hereof shall relieve the assignor of its obligations under this Agreement in the event that the assignee fails to perform such obligations. Notwithstanding anything to the contrary in this Section, Level 3 shall not assign this Agreement to any Affiliate or non-affiliated entity unless either (1) Level 3 pays all undisputed bills and assigns all rights to disputed bills to assignee, past due and current, under this Agreement, or (2) Level 3's assignee expressly assumes liability for payment of all bills.

**20. Notices**

20.1 Every notice, consent, approval, or other communications required or contemplated by this Agreement shall be in writing and shall be delivered by hand, by overnight courier or by US mail postage prepaid, address to:

**BellSouth Telecommunications, Inc.**

BellSouth Local Contract Manager
600 North 19th Street, 8th floor
Birmingham, AL 35203

and

ICS Attorney
Suite 4300
675 West Peachtree Street
Atlanta, GA 30375

**Level 3 Communications, LLC**

Director of Interconnection Services

Level 3 Communications, LLC
1025 Eldorado Blvd.
Broomfield, CO 80021

and

Vice President – Public Policy and Government Affairs
Level 3 Communications, LLC
1025 Eldorado Blvd.
Broomfield, CO 80021

or at such other address as the intended recipient previously shall have designated by written notice to the other Party.

20.2 Unless otherwise provided in this Agreement, notice by mail shall be effective on the date it is officially recorded as delivered by return receipt or equivalent, and in the absence of such record of delivery, it shall be presumed to have been delivered the fifth day, or next business day after the fifth day, after it was deposited in the mails.

20.3 Notwithstanding the foregoing, BellSouth may provide Level 3 notice via Internet posting of price changes and changes to the terms and conditions of services available for resale per Commission Orders. BellSouth will post changes to business processes and policies, notices of new service offerings, and changes to service offerings not requiring an amendment to this Agreement, notices required to be posted to BellSouth's website, and any other information of general applicability to CLECs.

**21. Rule of Construction**

No rule of construction requiring interpretation against the drafting Party hereof shall apply in the interpretation of this Agreement.

**22. Headings of No Force or Effect**

The headings of Articles and Sections of this Agreement are for convenience of reference only, and shall in no way define, modify or restrict the meaning or interpretation of the terms or provisions of this Agreement.

**23. Multiple Counterparts**

This Agreement may be executed in multiple counterparts, each of which shall be deemed an original, but all of which shall together constitute but one and the same document.

**24. Filing of Agreement**

Upon execution of this Agreement it shall be filed with the appropriate state regulatory agency pursuant to the requirements of Section 252 of the Act, and the Parties shall share equally any filing fees therefore. If the regulatory agency imposes any filing or public interest notice fees regarding the filing or approval of the Agreement, Level 3 shall be responsible for publishing the required notice and the publication and/or notice costs shall be borne by Level 3. Notwithstanding the foregoing, this Agreement shall not be submitted for approval by the appropriate state regulatory agency unless and until such time as Level 3 is duly certified as a local exchange carrier in such state, except as otherwise required by a Commission.

**25. Compliance with Applicable Law**

Each Party shall comply at its own expense with applicable law.

**26. Necessary Approvals**

Each Party shall be responsible for obtaining and keeping in effect all approvals from, and rights granted by, governmental authorities, building and property owners, other carriers, and any other persons that may be required in connection with the performance of its obligations under this Agreement. Each Party shall reasonably cooperate with the other Party in obtaining and maintaining any required approvals and rights for which such Party is responsible.

**27. Good Faith Performance**

Each Party shall act in good faith in its performance under this Agreement and, in each case in which a Party's consent or agreement is required or requested hereunder, such Party shall not unreasonably withhold or delay such consent or agreement.

**28. Nonexclusive Dealings**

This Agreement does not prevent either Party from providing or purchasing services to or from any other person nor, except as provided in Section 252(i) of the Act, does it obligate either Party to provide or purchase any services (except insofar as the Parties are obligated to provide access to Interconnection, services and Network Elements to Level 3 as a requesting carrier under the Act).

**29. Rate True-Up**

29.1 This section applies to Network Interconnection and/or Unbundled Network Elements and Other Services rates that are expressly subject to true-up under this Agreement.

29.2 The designated true-up rates shall be trued-up, either up or down, based on final prices determined either by further agreement between the Parties, or by a final

order (including any appeals) of the Commission. The Parties shall implement the true-up by comparing the actual volumes and demand for each item, together with the designated true-up rates for each item, with the final prices determined for each item. Each Party shall keep its own records upon which the true-up can be based, and any final payment from one Party to the other shall be in an amount agreed upon by the Parties based on such records. In the event of any disagreement as between the records or the Parties regarding the amount of such true-up, the Parties shall submit the matter to the Dispute Resolution process in accordance with the provisions of this Agreement.

## 30. Survival

The Parties' obligations under this Agreement which by their nature are intended to continue beyond the termination or expiration of this Agreement shall survive the termination or expiration of this Agreement.

## 31. Entire Agreement

31.1 This Agreement means the General Terms and Conditions, the Attachments identified in Section 31.2 below, and all documents identified therein, as such may be amended from time to time and which are incorporated herein by reference, all of which, when taken together, are intended to constitute one indivisible agreement. This Agreement sets forth the entire understanding and supersedes prior agreements between the Parties relating to the subject matter contained in this Agreement and merges all prior discussions between them. Except as may be otherwise specified in this Agreement, this Agreement applies prospectively from the Effective Date hereof to (a) all orders for Services placed under any prior interconnection agreement between the Parties which are not completed as of the Effective Date hereof and (b) all Services being provided by either Party as of the Effective Date hereof under any prior interconnection agreement between the Parties; provided, however, that all non-recurring charges for orders for Services placed under any prior interconnection agreement between the Parties that are completed prior to the Effective Date hereof and all charges for Services provided by either Party prior to the Effective Date hereof shall be in accordance with such prior interconnection agreement; provided, further, that a failure of the other Party to pay any amounts due under such prior interconnection agreement shall be deemed a failure to pay an amount due under this Agreement and any dispute shall be resolved in accordance with the Dispute Resolution process set forth in this Agreement. . Neither Party shall be bound by any definition, condition, provision, representation, warranty, covenant or promise other than as expressly stated in this Agreement or as is contemporaneously or subsequently set forth in writing and executed by a duly authorized officer or representative of the Party to be bound thereby.

31.2 This Agreement includes Attachments with provisions for the following:

Resale
Network Elements and Other Services
Network Interconnection
Collocation
Access to Numbers and Number Portability
Pre-Ordering, Ordering, Provisioning, Maintenance and Repair
Billing
Rights-of-Way, Conduits and Pole Attachments
Performance Measurements
BellSouth Disaster Recovery Plan
Bona Fide Request/New Business Request Process

31.3 The following services are included as options for purchase by Level 3 pursuant to the terms and conditions set forth in this Agreement. Level 3 may elect to purchase said services by written request to its Local Contract Manager if applicable:

Optional Daily Usage File (ODUF)
Enhanced Optional Daily Usage File (EODUF)
Access Daily Usage File (ADUF)
Line Information Database (LIDB) Storage
Centralized Message Distribution Service (CMDS)
Calling Name (CNAM)
LNP Data Base Query Service

IN WITNESS WHEREOF, the Parties have executed this Agreement the day and year written below.

**BellSouth Telecommunications, Inc.**

By: Kristen E Rowe

Name: Kristen E. Rowe

Title: Director

Date: 5/24/04

**Level 3 Communications, L.L.C.**

By: [signature]

Name: LaCharles Keesee II

Title: Vice President - Interconnection Services

Date: May 19, 2004

# Attachment 1

# Resale

**Table of Contents**

1. Discount Rates ..... 3

2. Definition of Terms ..... 3

3. General Provisions ..... 3

4. BellSouth's Provision of Services to Level 3 ..... 7

5. Maintenance of Services ..... 9

6. Establishment of Service ..... 9

7. Discontinuance of Service ..... 10

8. Operator Services (Operator Call Processing and Directory Assistance) ..... 11

9. Line Information Database (LIDB) ..... 15

10. RAO Hosting ..... 15

11. Optional Daily Usage File (ODUF) ..... 15

12. Enhanced Optional Daily Usage File (EODUF) ..... 15

Resale Restrictions Exhibit A

Line Information Database (LIDB) Storage Agreemt Exhibit B

Optional Daily Usage File (ODUF) Exhibit C

Enhanced Option Daily Usage File (EODUF) Exhibit D

Resale Discounts and Rates Exhibit E

# RESALE

## 1. Discount Rates

1.1 The discount rates applied to Level 3 purchases of BellSouth Telecommunications Services for the purpose of resale shall be as set forth in Exhibit E. Such discounts have been determined by the applicable Commission.

1.2 The telecommunications services available for purchase by Level 3 for the purposes of resale to Level 3's End Users shall be available at BellSouth's tariffed rates less the discount set forth in Exhibit E to this Agreement and subject to the exclusions and limitations set forth in Exhibit A to this Agreement.

## 2. Definition of Terms

2.1 COMPETITIVE LOCAL EXCHANGE COMPANY (CLEC) means a telephone company certificated by the Commission to provide local exchange service within BellSouth's franchised area.

2.2 CUSTOMER OF RECORD means the entity responsible for placing application for service; requesting additions, rearrangements, maintenance or discontinuance of service; payment in full of charges incurred such as non-recurring, monthly recurring, toll, directory assistance, etc.

2.3 DEPOSIT means assurance provided by a customer in the form of cash, surety bond or bank letter of credit to be held by BellSouth.

2.4 END USER means the ultimate user of the Telecommunications Service.

2.5 END USER CUSTOMER LOCATION means the physical location of the premises where an End User makes use of the telecommunications services.

2.6 NEW SERVICES means functions, features or capabilities that are not currently offered by BellSouth. This includes packaging of existing services or combining a new function, feature or capability with an existing service.

2.7 RESALE means an activity wherein a certificated CLEC, such as Level 3, subscribes to the telecommunications services of BellSouth and then offers those telecommunications services to the public.

## 3. General Provisions

3.1 All of the negotiated rates, terms and conditions set forth in this Attachment pertain to the resale of BellSouth's retail telecommunications services and other services specified in this Attachment. Subject to effective and applicable FCC and

Commission rules and orders, BellSouth shall make available to Level 3 for resale those telecommunications services BellSouth makes available, pursuant to its General Subscriber Services Tariff and Private Line Services Tariff, to customers who are not telecommunications carriers.

3.1.1 When Level 3 provides Resale service in a cross boundary area (areas that are part of the local serving area of another state's exchange) the rates, regulations and discounts for the tariffing state will apply. Billing will be from the serving state

3.1.2 In Tennessee, if Level 3 does not resell Lifeline service to any end users, and if Level 3 agrees to order an appropriate Operator Services/Directory Assistance block as set forth in BellSouth's General Subscriber Services Tariff, the discount shall be 21.56%.

3.1.2.1 In the event Level 3 resells Lifeline service to any end user in Tennessee, BellSouth will begin applying the 16% discount rate to all services. Upon Level 3 and BellSouth's implementation of a billing arrangement whereby a separate Master Account (Q-account) associated with a separate Operating Customer Number (OCN) is established for billing of Lifeline service end users, the discount shall be applied as set forth in 3.1.2 preceding for the non-Lifeline affected Master Account (Q-account).

3.1.2.2 Level 3 must provide written notification to BellSouth within 30 days prior to either providing its own operator services/ directory services or orders the appropriate operator services/directory assistance blocking, to qualify for the higher discount rate of 21.56%.

3.2 Level 3 may purchase resale services from BellSouth for its own use in operating its business. The resale discount will apply to those services under the following conditions:

3.2.1 Level 3 must resell services to other End Users.

3.2.2 Level 3 cannot be a competitive local exchange telecommunications company for the single purpose of selling to itself.

3.3 Level 3 will be the customer of record for all services purchased from BellSouth. Except as specified herein, BellSouth will take orders from, bill and receive payment from Level 3 for said services.

3.4 Level 3 will be BellSouth's single point of contact for all services purchased pursuant to this Agreement. BellSouth shall have no contact with the End User except to the extent provided for herein. Each Party shall provide to the other a nation wide (50 states) toll-free contact number for purposes of repair and maintenance.

3.5 BellSouth will continue to bill the End User for any services that the End User specifies it wishes to receive directly from BellSouth. BellSouth maintains the right to serve directly any End User within the service area of Level 3. BellSouth will continue to market directly its own telecommunications products and services and in doing so may establish independent relationships with End Users of Level 3. Neither Party shall interfere with the right of any person or entity to obtain service directly from the other Party.

3.5.1 When an End User of Level 3 or BellSouth elects to change his/her carrier to the other Party, both Parties agree to release the End User's service to the other Party concurrent with the due date of the service order, which shall be established based on the standard interval for the End User's requested service as set forth in Attachment 6 of this Agreement.

3.5.2 BellSouth and Level 3 will refrain from contacting an End User who has placed or whose selected carrier has placed on the End User's behalf an order to change the End User's service provider from BellSouth or Level 3 to the other Party until such time that the order for service has been completed.

3.6 Current telephone numbers may normally be retained by the End User and are assigned to the service furnished. However, neither Party nor the End User has a property right to the telephone number or any other call number designation associated with services furnished by BellSouth or Level 3, and no right to the continuance of service through any particular central office. BellSouth reserves the right to change such numbers, or the central office designation associated with such numbers, or both, whenever BellSouth deems it necessary to do so in the conduct of its business and in accordance with BellSouth practices and procedures, consistent with applicable law, on a nondiscriminatory basis.

3.7 Where BellSouth provides resold services to Level 3, BellSouth will provide Level 3 with on-line access to intermediate telephone numbers in accordance with Attachment 5, Section 1.

3.8 BellSouth will allow Level 3 to designate up to 100 intermediate telephone numbers per CLLIC, for Level 3's sole use. Assignment, reservation and use of telephone numbers shall be in accordance with Attachment 5, Section 1.

3.9 Service is furnished subject to the condition that it will not be used for any unlawful purpose.

3.10 Service will be discontinued if any law enforcement agency advises that the service being used is in violation of the law.

3.11 BellSouth can refuse service when it has grounds to believe that service will be used in violation of the law.

3.12 BellSouth will cooperate with law enforcement agencies with subpoenas and court orders relating to Level 3's End Users, pursuant to Section 6 of the General Terms and Conditions.

3.13 If Level 3 or its End Users utilize a BellSouth resold telecommunications service as described in the BellSouth retail tariff in violation of BellSouth's retail tariffs, Level 3 has the responsibility, to the extent that it is aware of such violation, to notify BellSouth. BellSouth will only provision and maintain said service consistent with the terms and conditions of the tariff describing said service on a nondiscriminatory basis. .

3.14 Facilities and/or equipment utilized by BellSouth to provide service to Level 3 remain the property of BellSouth.

3.15 White page directory listings for Level 3 End Users will be provided in accordance with Section 5 of the General Terms and Conditions.

3.16 Service Ordering and Operational Support Systems (OSS)

3.16.1 Level 3 must order services through resale interfaces, i.e., the Local Carrier Service Center (LCSC) and/or appropriate Complex Resale Support Group (CRSG) pursuant to this Agreement. BellSouth has developed and made available the interactive interfaces by which Level 3 may submit a Local Service Request (LSR) electronically as set forth in Attachment 2 of this Agreement. Service orders will be in a standard format designated by BellSouth.

3.16.2 LSRs submitted by means of one of these interactive interfaces will incur an OSS electronic charge as set forth in Exhibit E to this Agreement. An individual LSR will be identified for billing purposes by its Purchase Order Number (PON). LSRs submitted by means other than one of these interactive interfaces (Mail, fax, courier, etc.) will incur a manual order charge as set forth in Exhibit E to this Agreement. Supplements or clarifications to a previously billed LSR will not incur another OSS charge.

3.16.3 Denial/Restoral OSS Charge. In the event Level 3 provides a list of customers to be denied and restored, rather than an LSR, each location on the list will require a separate PON and therefore will be billed as one LSR per location.

3.16.4 Cancellation OSS Charge. Level 3 will incur an OSS charge for an accepted LSR that is later canceled provided BellSouth has processed the LSR in accordance with Attachment 6, Sections 3.4 through 3.6.

3.17 Where available to BellSouth's End Users, BellSouth shall provide the following telecommunications services at a discount to allow for voice mail services:

- Message Waiting Indicator ("MWI"), stutter dialtone and message waiting light feature capabilities

- Call Forward Busy Line ("CF/B")

- Call Forward Don't Answer ("CF/DA")

Further, BellSouth messaging services set forth in BellSouth's Messaging Service Information Package shall be made available for resale without the wholesale discount.

3.18 BellSouth shall provide branding for, or shall unbrand, voice mail services for Level 3 per the Bona Fide Request/New Business Request process as set forth in Attachment 11 of this Agreement.

3.19 BellSouth's Inside Wire Maintenance Service Plan is available for resale at rates, terms and conditions as set forth by BellSouth and without the wholesale discount.

3.20 In the event Level 3 acquires an end user whose service is provided pursuant to a BellSouth Special Assembly, BellSouth shall make available to Level 3 that Special Assembly at the wholesale discount at Level 3's option. Level 3 shall be responsible for all terms and conditions of such Special Assembly including but not limited to termination liability if applicable.

3.21 BellSouth shall provide 911/E911 for Level 3 customers in the same manner that it is provided to BellSouth customers. BellSouth shall provide and validate Level 3 customer information to the PSAP. BellSouth shall use its service order process to update and maintain, on the same schedule that it uses for its customers, the Level 3 customer service information in the ALI/DMS (Automatic Location Identification/Location Information) databases used to support 911/E911 services.

3.22 BellSouth shall bill, and Level 3 shall pay, the End User line charge associated with implementing Number Portability as set forth in BellSouth's FCC No. 1 tariff. This charge is not subject to the wholesale discount.

3.23 Pursuant to 47 CFR Section 51.617, BellSouth shall bill to Level 3, and Level 3 shall pay, the End User common line charges identical to the End User common line charges BellSouth bills its End Users.

**4. BellSouth's Provision of Services to Level 3**

4.1 Resale of BellSouth services shall be as follows:

4.1.1 The resale of telecommunications services shall be limited to users and uses conforming to the class of service restrictions.

4.1.2 Hotel and Hospital PBX services are the only telecommunications services available for resale to Hotel/Motel and Hospital End Users, respectively. Similarly, Access Line Service for Customer Provided Coin Telephones is the only local service available for resale to Payphone Service Provider (PSP) customers. Shared Tenant Service customers can only be sold those local exchange access services available in BellSouth's A23 Shared Tenant Service Tariff in the states of Florida, Georgia, North Carolina and South Carolina, and in A27 in the states of Alabama, Kentucky, Louisiana, Mississippi and Tennessee.

4.1.3 BellSouth reserves the right to periodically audit services purchased by Level 3 to establish authenticity of use. Such audit shall not occur more than once in a calendar year. Level 3 shall make any and all records and data available to BellSouth or BellSouth's auditors on a reasonable basis. BellSouth shall bear the cost of said audit. Any information provided by Level 3 for purposes of such audit shall be deemed Confidential Information pursuant to the General Terms and Conditions of this Agreement.

4.2 Resold services are subject to the same terms and conditions as are specified for such services when furnished to an individual End User of BellSouth in the appropriate section of BellSouth's Tariffs. Specific tariff features (e.g. a usage allowance per month) shall not be aggregated across multiple resold services. Exclusions and limitations on services available for resale are defined in Exhibit A of this Attachment.

4.3 Level 3 may resell services in accordance with the rules and regulations of the Commission.

4.4 If Level 3 cancels an order for resold services, any costs incurred by BellSouth in conjunction with provisioning of such order will be recovered in accordance with BellSouth's General Subscriber Services Tariffs and Private Line Services Tariffs.

4.5 Service Jointly Provisioned with an Independent Company or Competitive Local Exchange Company Areas

4.5.1 BellSouth will in some instances provision resold services in accordance with the General Subscriber Services Tariff and Private Line Tariffs jointly with an Independent Company or other Competitive Local Exchange Carrier.

4.5.2 When Level 3 assumes responsibility for such service, all terms and conditions defined in the Tariff will apply for services provided within the BellSouth service area only.

4.5.3 Service terminating in an Independent Company or other Competitive Local Exchange Carrier area will be provisioned and billed by the Independent Company or other Competitive Local Exchange Carrier directly to Level 3.

4.5.4 Level 3 must establish a billing arrangement with the Independent Company or other Competitive Local Exchange Carrier prior to assuming an end user account where such circumstances apply.

4.5.5 Specific guidelines regarding such services are available on BellSouth's website @ www.interconnection.bellsouth.com.

**5. Maintenance of Services**

5.1 Services resold pursuant to this Attachment and BellSouth's General Subscriber Service Tariff and Private Line Service Tariff and facilities and equipment provided by BellSouth shall be maintained by BellSouth.

5.2 Level 3 or its End Users may not rearrange, move, disconnect, remove or attempt to repair any facilities owned by BellSouth except with the written consent of BellSouth.

5.3 Level 3 accepts responsibility to notify BellSouth of situations that arise that may result in a service problem.

5.4 Level 3 will contact the appropriate repair centers in accordance with procedures established by BellSouth.

5.5 For all repair requests, Level 3 shall adhere to BellSouth's prescreening guidelines prior to referring the trouble to BellSouth.

5.6 BellSouth will bill Level 3 for handling troubles that are found not to be in BellSouth's network pursuant to its standard time and material charges. The standard time and material charges will be no more than what BellSouth charges to its retail customers for the same services.

5.7 BellSouth reserves the right to contact Level 3's End Users, if deemed necessary, for maintenance purposes. During contacts with Level 3's End Users for maintenance or repair of services under this Attachment, BellSouth shall not attempt to sell or market any BellSouth service, nor shall BellSouth in any way disparage Level 3.

**6. Establishment of Service**

6.1 After receiving certification as a local exchange carrier from the applicable regulatory agency, Level 3 will provide the appropriate BellSouth Advisory team manager the necessary documentation to enable BellSouth to establish accounts for resold services ("master account"). Level 3 is required to provide the following before a master account is established: blanket letter of authorization, misdirected number form, proof of PSC/PUC certification, the Application for Master Account, an Operating Company Number ("OCN") assigned by the

National Exchange Carriers Association ("NECA") and a deposit and tax exemption certificate, if applicable.

6.1.1 If Level 3 needs to change its OCN(s) under which it operates when Level 3 has already been conducting business utilizing those OCN(s), BellSouth may charge Level 3 its tariffed rate for OCN conversion charges as found in the appropriate section of BellSouth tariff to convert Level 3 to the new OCN(s). OCN conversion charges include all time required to make system updates to all of Level 3's end user customer records. Appropriate charges will appear in the OC&C section of Level 3's bill.

6.2 Level 3 shall provide to BellSouth a blanket letter of authorization ("LOA") certifying that Level 3 will have End User authorization prior to viewing the End User's customer service record or switching the End User's service. BellSouth will not require End User confirmation prior to establishing service for Level 3's End User customer.

6.3 BellSouth will accept a request directly from the End User for conversion of the End User's service from Level 3 to BellSouth or will accept a request from another CLEC for conversion of the End User's service from Level 3 to such other CLEC. Upon completion of the conversion BellSouth will notify Level 3 that such conversion has been completed.

**7. Discontinuance of Service**

7.1 The procedures for discontinuing service to an End User are as follows:

7.1.1 BellSouth will deny service to Level 3's End User on behalf of, and at the request of, Level 3. Upon restoration of the End User's service, restoral charges will apply and will be the responsibility of Level 3.

7.1.2 At the request of Level 3, BellSouth will disconnect a Level 3 End User customer.

7.1.3 All requests by Level 3 for denial or disconnection of an End User for nonpayment must be in writing.

7.1.4 Level 3 will be made solely responsible for notifying the End User of the proposed disconnection of the service.

7.1.5 BellSouth will continue to process calls made to the Annoyance Call Center and will advise Level 3 when it is determined that annoyance calls are originated from one of its End User's locations. BellSouth shall be indemnified, defended and held harmless by Level 3 and/or the End User against any claim, loss or damage arising from providing this information to Level 3. It is the responsibility of Level 3 to take the corrective action necessary with its End Users who make annoying calls. (Failure to do so will result in BellSouth's disconnecting the End User's service.)

**8. Operator Services (Operator Call Processing and Directory Assistance)**

8.1 Operator Call Processing provides: (1) operator handling for call completion (for example, collect, third number billing, and manual calling-card calls). (2) operator or automated assistance for billing after the end user has dialed the called number (for example, calling card calls); and (3) special services including but not limited to Busy Line Verification and Emergency Line Interrupt (ELI), Emergency Agency Call and Operator-assisted Directory Assistance.

8.1 Upon request for BellSouth Operator Call Processing, BellSouth shall:

8.1.1 . Process 0+ and 0- dialed local calls

8.1.3 .2 Process 0+ and 0- intraLATA toll calls.

8.1.4 Process calls that are billed to Level 3 end user's calling card that can be validated by BellSouth.

8.1.5 Process person-to-person calls.

8.1.6 Process collect calls.

8.1.7 Provide the capability for callers to bill a third party and shall also process such calls.

8.1.8 Process station-to-station calls.

8.1.9 Process Busy Line Verify and Emergency Line Interrupt requests.

8.1.10 Process emergency call trace originated by Public Safety Answering Points.

8.1.11 Process operator-assisted directory assistance calls.

8.1.12 Adhere to equal access requirements, providing Level 3 local end users the same IXC access that BellSouth provides its own operator service.

8.1.13 Exercise at least the same level of fraud control in providing Operator Service to Level 3 that BellSouth provides for its own operator service.

8.1.14 Perform Billed Number Screening when handling Collect, Person-to-Person, and Billed-To-Third-Party calls.

8.1.15 Direct customer account and other similar inquiries to the customer service center designated by Level 3.

8.1.16 Provide call records to Level 3 in accordance with ODUF standards.

8.1.17 The interface requirements shall conform to the interface specifications for the platform used to provide Operator Services as long as the interface conforms to industry standards.

8.2 Directory Assistance Service

8.2.1 Directory Assistance Service provides local and non-local end user telephone number listings with the option to complete the call at the caller's direction separate and distinct from local switching.

8.2.2 Directory Assistance Service shall provide up to two listing requests per call, if available and if requested by Level 3's end user. BellSouth shall provide caller-optional directory assistance call completion service at rates set forth in BellSouth's General Subscriber Services Tariff to one of the provided listings.

8.3.1 Directory Assistance Service Updates

8.3.1 BellSouth shall update end user listings changes daily. These changes include:

8.3.2 New end user connections

8.3.3 End user disconnections

8.3.4 End user address changes

8.3.5 These updates shall also be provided for non-listed and non-published numbers for use in emergencies.

8.4 Branding for Operator Call Processing and Directory Assistance

8.4.1 BellSouth's branding feature provides a definable announcement to Level 3 end users using Directory Assistance (DA)/ Operator Call Processing (OCP) prior to placing such end users in queue or connecting them to an available operator or automated operator system. This feature allows Level 3's name on whose behalf BellSouth is providing Directory Assistance and/or Operator Call Processing. Rates for the branding features are set forth in Exhibit E of this Attachment.

8.4.2 BellSouth offers three branding offering options to Level 3 when ordering BellSouth's Directory Assistance and Operator Call Processing: BellSouth Branding, Unbranding and Custom Branding.

8.4.3 Upon receipt of the branding order from Level 3, the order is considered firm after ten (10) business days. Should Level 3 decide to cancel the order, written notification to Level 3's BellSouth Account Executive is required. If Level 3 decides to cancel after ten (10) business days from receipt of the branding order, Level 3 shall pay all charges per the order.

8.4.4 Branding via Originating Line Number Screening (OLNS)

8.4.4.1 BellSouth Branding, Unbranding and Custom Branding are also available for Directory Assistance, Operator Call Processing or both via OLNS software. When utilizing this method of Unbranding or Custom Branding Level 3 shall not be required to purchase dedicated trunking.

8.4.4.2 BellSouth Branding is the default branding offering.

8.4.4.3 For BellSouth to provide Unbranding or Custom Branding via OLNS software for Operator Call Processing or for Directory Assistance Level 3 must have its Operating Company Number ("OCN(s)") and telephone numbers reside in BellSouth's LIDB; however, a BellSouth LIDB Storage Agreement is not required. To Implement Unbranding and Custom Branding via OLNS software, Level 3 must submit a manual order form which requires, among other things, Level 3's OCN and a forecast for the traffic volume anticipated for each BellSouth TOPS during the peak busy hour. Level 3 shall provide updates to such forecast on a quarterly basis and at any time such forecasted traffic volumes are expected to change significantly. Upon Level 3's purchase of Unbranding and Custom Branding using OLNS software for any particular TOPS, all Level 3 end users served by that TOPS will receive the Unbranded "no announcement" or the Custom Branded announcement.

8.4.4.4 Rates for Unbranding and Custom Branding via OLNS software for Directory Assistance and for Operator Call Processing are as set forth in Exhibit E of this Attachment. In addition to the charges for Unbranding and Custom Branding via OLNS software, Level 3 shall continue to pay BellSouth applicable labor and other charges for the use of BellSouth's Directory Assistance and Call Processing platforms as set forth in Exhibit E of this Attachment.

8.4.5 Selective Call Routing using Line Class Codes (SCR-LCC)

8.4.5.1 Where Level 3 resells BellSouth's services and utilizes an operator services provider other than BellSouth, BellSouth will route Level 3's end user calls to that provider through Selective Call Routing.

8.4.5.2 Selective Call Routing using Line Class Codes (SCR-LCC) provides the capability for Level 3 to have its OCP/DA calls routed to BellSouth's OCP/DA platform for BellSouth provided Custom Branded or Unbranded OCP/DA or to its own or an alternate OCP/DA platform for Self-Branded OCP/DA. SCR-LCC is only available if line class code capacity is available in the requested BellSouth end office switches.

8.4.5.3 Custom Branding for Directory Assistance is not available for certain classes of service, including but not limited to Hotel/Motel services, WATS service and certain PBX services.

8.4.5.4 Where available, Level 3 specific and unique line class codes are programmed in each BellSouth end office switch where Level 3 intends to service end users with customized OCP/DA branding. The line class codes specifically identify Level 3's end users so OCP/DA calls can be routed over the appropriate trunk group to the requested OCP/DA platform. Additional line class codes are required in each end office if the end office serves multiple NPAs (i.e., a unique LCC is required per NPA), and/or if the end office switch serves multiple rate areas and Level 3 intends to provide Level 3-branded OCP/DA to its end users in these multiple rate areas.

8.4.5.5 BellSouth Branding is the default branding offering.

8.4.5.6 SCR-LCC supporting Custom Branding and Self Branding require Level 3 to order dedicated transport and trunking from each BellSouth end office identified by Level 3, either to the BellSouth Traffic Operator Position System (TOPS) for Custom Branding or to the Level 3 Operator Service Provider for Self Branding. Separate trunk groups are required for Operator Services and for Directory Assistance. Rates for transport and trunks are set forth in applicable BellSouth Tariffs.

8.4.5.7 The rates for SCR-LCC are as set forth in Exhibit E of this Attachment. There is a nonrecurring charge for the establishment of each Line Class Code in each BellSouth central office.

8.4.5.8 Unbranded Directory Assistance and/or Operator Call Processing calls ride common trunk groups provisioned by BellSouth from those end offices identified by Level 3 to the BellSouth Tops. The calls are routed to "No Announcement."

8.4.6 Customized Branding includes charges for the recording of the branding announcement and the loading of the audio units in each TOPS Switch and Network Applications Vehicle (NAV) equipment for which Level 3 requires service.

8.4.6.1 Directory Assistance customized branding uses:

8.4.6.2 the recording of Level 3

8.4.6.3 the loading of the recording in each switch.

8.4.6.4 Operator Call Processing customized branding uses:

8.4.6.5 the recording of Level 3

8.4.6.6 2 the loading of the recording in each switch.

8.4.6.7 the loading on the Network Applications Vehicle (NAV). All NAV shelves within the region where the customer is offering service must be loaded.

**9. Line Information Database (LIDB)**

9.1 BellSouth will store in its Line Information Database (LIDB) records relating to service only in the BellSouth region. The LIDB Storage Agreement is included in this Attachment as Exhibit B.

9.2 BellSouth will provide LIDB Storage upon written request to Level 3's Account Manager stating a requested activation date.

**10. RAO Hosting**

10.1 RAO Hosting is not required for resale in the BellSouth region.

**11. Optional Daily Usage File (ODUF)**

11.1 The Optional Daily Usage File (ODUF) Agreement with terms and conditions is included in this Attachment as Exhibit C. Rates for ODUF are as set forth in Exhibit E of this Attachment.

11.2. BellSouth will provide ODUF service upon written request to its Account Manager stating a requested activation date.

**12. Enhanced Optional Daily Usage File (EODUF)**

12.1 The Enhanced Optional Daily Usage File (EODUF) service Agreement with terms and conditions is included in this Attachment as Exhibit D. Rates for EODUF are as set forth in Exhibit E of this Attachment.

12.2 BellSouth will provide EODUF service upon written request to its Account Manager stating a requested activation date.

## EXCLUSIONS AND LIMITATIONS ON SERVICES AVAILABLE FOR RESALE (Note 3)

| | Type of Service | AL | | FL | | GA | | KY | | LA | | MS | | NC | | SC | | TN | |
|---|---|---|---|---|---|---|---|---|---|---|---|---|---|---|---|---|---|---|---|
| | | Resale | Discount | Resale | Discount | Resale | Discount | Resale | Discount | Resale | Discount | Resale | Discount | Resale | Discount | Resale | Discount | Resale | Discount |
| 1 | Grandfathered Services (Note 1) | Yes | Yes | Yes | Yes | Yes | Yes | Yes | Yes | Yes | Yes | Yes | Yes | Yes | Yes | Yes | Yes | Yes | Yes |
| 2 | Promotions - > 90 Days(Note 2) | Yes | Yes | Yes | Yes | Yes | Yes | Yes | Yes | Yes | Yes | Yes | Yes | Yes | Yes | Yes | Yes | Yes | Yes |
| 3 | Promotions - ≤ 90 Days (Note 2) | Yes | No | Yes | No | Yes | No | Yes | No | Yes | No | Yes | No | Yes | No | Yes | No | Yes | No |
| 4 | Lifeline/Link Up Services | Yes | Yes | Yes | Yes | Yes | Yes | No | No | Yes | Yes | Yes | Yes | Yes | Yes | Yes | Yes | Yes | Yes |
| 5 | 911/E911 Services | Yes | Yes | Yes | Yes | Yes | Yes | Yes | Yes | No | No | Yes | Yes | Yes | Yes | Yes | Yes | Yes | Yes |
| 6 | N11 Services | Yes | Yes | Yes | Yes | Yes | Yes | No | No | No | No | Yes | Yes | Yes | Yes | No | No | Yes | Yes |
| 7 | MemoryCall®Service | Yes | No | Yes | No | Yes | No | Yes | No | Yes | No | Yes | No | Yes | No | Yes | No | Yes | No |
| 8 | Mobile Services | Yes | No | Yes | No | Yes | No | Yes | No | Yes | No | Yes | No | Yes | No | Yes | No | Yes | No |
| 9 | Federal Subscriber Line Charges | Yes | No | Yes | No | Yes | No | Yes | No | Yes | No | Yes | No | Yes | No | Yes | No | Yes | No |
| 10 | Non-RecurCharges | Yes | Yes | Yes | Yes | Yes | Yes | Yes | Yes | Yes | Yes | Yes | Yes | Yes | Yes | Yes | Yes | Yes | No |
| 11 | End User Line Chg-Number Portability | Yes | No | Yes | No | Yes | No | Yes | No | Yes | No | Yes | No | Yes | No | Yes | No | Yes | No |
| 12 | Public Telephone Access Svc(PTAS) | Yes | Yes | Yes | Yes | Yes | Yes | Yes | Yes | Yes | Yes | Yes | Yes | Yes | Yes | Yes | No | Yes | Yes |
| 13 | Inside Wire Maint Service Plan | Yes | No | Yes | No | Yes | No | Yes | No | Yes | No | Yes | No | Yes | No | Yes | No | Yes | No |

| | Applicable Notes: |
|---|---|
| 1. | **Grandfathered services** can be resold only to existing subscribers of the grandfathered service. |
| 2. | Where available for resale, **promotions** will be made available only to End Users who would have qualified for the promotion had it been provided by BellSouth directly. |
| 3. | Some of BellSouth's local exchange and toll telecommunications services are not available in certain central offices and areas. |

## LINE INFORMATION DATA BASE (LIDB)

## RESALE STORAGE AGREEMENT

**I. Definitions (from Addendum)**

A. Billing number - a number used by BellSouth for the purpose of identifying an account liable for charges. This number may be a line or a special billing number.

B. Line number - a ten-digit number assigned by BellSouth that identifies a telephone line associated with a resold local exchange service.

C. Special billing number - a ten-digit number that identifies a billing account established by BellSouth in connection with a resold local exchange service.

D. Calling Card number - a billing number plus PIN number assigned by BellSouth.

E. PIN number - a four-digit security code assigned by BellSouth that is added to a billing number to compose a fourteen-digit calling card number.

F. Toll billing exception indicator - associated with a billing number to indicate that it is considered invalid for billing of collect calls or third number calls or both, by Level 3.

G. Billed Number Screening - refers to the query service used to determine whether a toll billing exception indicator is present for a particular billing number.

H. Calling Card Validation - refers to the query service used to determine whether a particular calling card number exists as stated or otherwise provided by a caller.

I. Billing number information - information about billing number or Calling Card number as assigned by BellSouth and toll billing exception indicator provided to BellSouth by Level 3.

J. Get-Data - refers to the query service used to determine, at a minimum, the Account Owner and/or Regional Accounting Office for a line number. This query service may be modified to provide additional information in the future.

K. Originating Line Number Screening ("OLNS") - refers to the query service used to determine the billing, screening and call handling indicators, station type and Account Owner provided to BellSouth by Level 3 for originating line numbers.

L. Account Owner - name of the local exchange telecommunications company that is providing dialtone on a subscriber line.

## II. General

A. This Agreement sets forth the terms and conditions pursuant to which BellSouth agrees to store in its LIDB certain information at the request of Level 3 and pursuant to which BellSouth, its LIDB customers and Level 3 shall have access to such information. In addition, this Agreement sets forth the terms and conditions for Level 3's provision of billing number information to BellSouth for inclusion in BellSouth's LIDB. Level 3 understands that BellSouth provides access to information in its LIDB to various telecommunications service providers pursuant to applicable tariffs and agrees that information stored at the request of Level 3, pursuant to this Agreement, shall be available to those telecommunications service providers. The terms and conditions contained herein shall hereby be made a part of this Resale Agreement upon notice to Level 3's account team and/or Local Contract Manager activate this LIDB Storage Agreement. The General Terms and Conditions of the Resale Agreement shall govern this LIDB Storage Agreement. The terms and conditions contained in the attached Addendum are hereby made a part of this LIDB Storage Agreement as if fully incorporated herein.

B. BellSouth will provide responses to on-line, call-by-call queries to billing number information for the following purposes:

1. Billed Number Screening

   BellSouth is authorized to use the billing number information to determine whether Level 3 has identified the billing number as one that should not be billed for collect or third number calls.

2. Calling Card Validation

   BellSouth is authorized to validate a 14-digit Calling Card number where the first 10 digits are a line number or special billing number assigned by BellSouth, and where the last four digits (PIN) are a security code assigned by BellSouth.

3. OLNS

   BellSouth is authorized to provide originating line screening information for billing services restrictions, station type, call handling indicators, presubscribed interLATA and local carrier and account owner on the lines of Level 3 from which a call originates.

4. GetData

   BellSouth is authorized to provide, at a minimum, the account owner and/or Regional Accounting Office information on the lines of Level 3 indicating the local

service provider and where billing records are to be sent for settlement purposes. This query service may be modified to provide additional information in the future.

5. Fraud Control

BellSouth will provide seven days per week, 24-hours per day, fraud monitoring on Calling Cards, bill-to-third and collect calls made to numbers in BellSouth's LIDB, provided that such information is included in the LIDB query. BellSouth will establish fraud alert thresholds and will notify Level 3 of fraud alerts so that Level 3 may take action it deems appropriate.

## III. Responsibilities of the Parties

A. BellSouth will administer all data stored in the LIDB, including the data provided by Level 3 pursuant to this Agreement, in the same manner as BellSouth's data for BellSouth's End User customers. BellSouth shall not be responsible to Level 3 for any lost revenue which may result from BellSouth's administration of the LIDB pursuant to its established practices and procedures as they exist and as they may be changed by BellSouth in its sole discretion from time to time.

B. Billing and Collection Customers

BellSouth currently has in effect numerous billing and collection agreements with various interexchange carriers and billing clearing houses and as such these billing and collection customers ("B&C Customers") query BellSouth's LIDB to determine whether to accept various billing options from End Users. Until such time as BellSouth implements in its LIDB and its supporting systems the means to differentiate Level 3's data from BellSouth's data, the following shall apply:

(1) BellSouth will identify Level 3 end user originated long distance charges and will return those charges to the interexchange carrier as not covered by the existing B&C agreement. Level 3 is responsible for entering into the appropriate agreement with interexchange carriers for handling of long distance charges by their end users.

(2) BellSouth shall have no obligation to become involved in any disputes between Level 3 and B&C Customers. BellSouth will not issue adjustments for charges billed on behalf of any B&C Customer to Level 3. It shall be the responsibility of Level 3 and the B&C Customers to negotiate and arrange for any appropriate adjustments.

## IV. Fees for Service and Taxes

A. Level 3 will not be charged a fee for storage services provided by BellSouth to Level 3, as described in this LIDB Resale Storage Agreement.

B. Sales, use and all other taxes (excluding taxes on BellSouth's income) determined by BellSouth or any taxing authority to be due to any federal, state or local taxing jurisdiction with respect to the provision of the service set forth herein will be paid by

Level 3 in accordance with the tax provisions set forth in the General Terms and Conditions of this Agreement.

## Optional Daily Usage File

1. Upon written request from Level 3, BellSouth will provide the Optional Daily Usage File (ODUF) service to Level 3 pursuant to the terms and conditions set forth in this section.

2. Level 3 shall furnish all relevant information required by BellSouth for the provision of the ODUF.

3. The ODUF feed will contain billable messages that were carried over the BellSouth Network and processed in the BellSouth Billing System, but billed to a Level 3 customer.

4. Charges for ODUF will appear on Level 3's monthly bills. The charges are as set forth in Exhibit E to this Attachment. ODUF charges are billed once a month for the previous month's usage. Level 3 will be billed at the ODUF rates that are in effect at the end of the previous month.

5. The ODUF feed will contain both rated and unrated messages. All messages will be in the standard Alliance for Telecommunications Industry Solutions (ATIS) EMI record format.

5.1 Messages that error in Level 3's billing system will be the responsibility of Level 3. If, however, Level 3 should encounter significant volumes of errored messages that prevent processing by Level 3 within its systems, BellSouth will work with Level 3 to determine the source of the errors and the appropriate resolution.

6. The following specifications shall apply to the ODUF feed.

6.1 ODUF Message to be Transmitted

6.1.1 The following messages recorded by BellSouth will be transmitted to Level 3:

- Message recording for per use/per activation type services (examples: Three Way Calling, Verify, Interrupt, Call Return, etc.)
- Measured billable Local
- Directory Assistance messages
- IntraLATA Toll

- WATS and 800 Service
- N11
- Information Service Provider Messages
- Operator Services Messages
- Credit/Cancel Records
- Usage for Voice Mail Message Service

6.1.2 Rated Incollects (originated in BellSouth and from other companies) can also be on ODUF. Rated Incollects will be intermingled with BellSouth recorded rated and unrated usage. Rated Incollects will not be packed separately.

6.1.3 BellSouth will perform duplicate record checks on records processed to ODUF. Any duplicate messages detected will be deleted and not sent to Level 3.

6.1.4 In the event that Level 3 detects a duplicate on ODUF they receive from BellSouth, Level 3 will drop the duplicate message and will not return the duplicate to BellSouth).

6.2 ODUF Physical File Characteristics

6.2.1 The ODUF will be distributed to Level 3 via CONNECT:Direct or Secure File Transfer Protocol (FTP) or another mutually agreed medium. The ODUF feed will be a variable block format. The data on the ODUF feed will be in a non-compacted EMI format (175 byte format plus modules). It will be created on a daily basis Monday through Friday except holidays. Details such as dataset name and delivery schedule will be addressed during negotiations of the distribution medium. There will be a maximum of one dataset per workday per OCN.

6.2.2 Data circuits (private line or dial-up) will be required between BellSouth and Level 3 for the purpose of data transmission when utilizing CONNECT:Direct. Where a dedicated line is required, Level 3 will be responsible for ordering the circuit, overseeing its installation and coordinating the installation with BellSouth. Level 3 will also be responsible for any charges associated with this line. Equipment required on the BellSouth end to attach the line to the mainframe computer and to transmit data will be negotiated on an individual case basis. Where a dial-up facility is required, dial circuits will be installed in the BellSouth data center by BellSouth and the associated charges assessed to Level 3. Additionally, all message toll charges associated with the use of the dial circuit by Level 3 will be the responsibility of Level 3. Associated equipment on the BellSouth end, including a modem, will be negotiated on an individual case basis between the Parties. All equipment, including modems and

software, that is required on Level 3 end for the purpose of data transmission will be the responsibility of Level 3.

6.2.3 If Level 3 utilizes Secure File Transfer Protocol (FTP) for data file transmission, purchase of the Secure File Transfer Protocol (FTP) software will be the responsibility of Level 3.

6.3 ODUF Packing Specifications

6.3.1 A pack will contain a minimum of one message record or a maximum of 99,999 message records plus a pack header record and a pack trailer record. One transmission can contain a maximum of 99 packs and a minimum of one pack.

6.3.2 The OCN, From RAO, and Invoice Number will control the invoice sequencing. The From RAO will be used to identify to Level 3 which BellSouth RAO is sending the message. BellSouth and Level 3 will use the invoice sequencing to control data exchange. BellSouth will be notified of sequence failures identified by Level 3 and resend the data as appropriate.

The data will be packed using ATIS EMI records.

6.4 ODUF Pack Rejection

6.4.1 Level 3 will notify BellSouth within one business day of rejected packs (via the mutually agreed medium). Packs could be rejected because of pack sequencing discrepancies or a critical edit failure on the Pack Header or Pack Trailer records (i.e. out-of-balance condition on grand totals, invalid data populated). Standard ATIS EMI Error Codes will be used. Level 3 will not be required to return the actual rejected data to BellSouth. Rejected packs will be corrected and retransmitted to Level 3 by BellSouth.

6.5 ODUF Control Data

Level 3 will send one confirmation record per pack that is received from BellSouth. This confirmation record will indicate Level 3 received the pack and the acceptance or rejection of the pack. Pack Status Code(s) will be populated using standard ATIS EMI error codes for packs that were rejected by Level 3 for reasons stated in the above section.

6.6 ODUF Testing

6.6.1 Upon request from Level 3, BellSouth shall send test files to Level 3 for the ODUF. The Parties agree to review and discuss the file's content and/or format. For testing of usage results, BellSouth shall request that Level 3 set up a production (live) file. The live test may consist of Level 3's employees making test calls for the types of services Level 3 requests on the ODUF. These test calls are logged by Level 3, and the logs

are provided to BellSouth. These logs will be used to verify the files. Testing will be completed within 30 calendar days from the date on which the initial test file was sent.

## Enhanced Optional Daily Usage File

1. Upon written request from Level 3, BellSouth will provide the Enhanced Optional Daily Usage File (EODUF) service to Level 3 pursuant to the terms and conditions set forth in this section. EODUF will only be sent to existing ODUF subscribers who request the EODUF option.

2. Level 3 shall furnish all relevant information required by BellSouth for the provision of the EODUF.

3. The EODUF will provide usage data for local calls originating from resold Flat Rate Business and Residential Lines.

4. Charges for delivery of the EODUF will appear on Level 3's monthly bills. EODUF charges are billed at the EODUF rates that are in effect at the end of the previous month. The charges are as set forth in Exhibit E to this Attachment.

5. All messages will be in the standard Alliance for Telecommunications Industry Solutions (ATIS) EMI record format.

6. Messages that error in the billing system of Level 3 will be the responsibility of Level 3. If, however, Level 3 should encounter significant volumes of errored messages that prevent processing by Level 3 within its systems, BellSouth will work with Level 3 to determine the source of the errors and the appropriate resolution.

7. The following specifications shall apply to the EODUF feed.

7.1 Usage To Be Transmitted

7.1.1 The following messages recorded by BellSouth will be transmitted to Level 3:

Customer usage data for flat rated local call originating from Level 3's End User lines (1FB or 1FR). The EODUF record for flat rate messages will include:

Date of Call

From Number

To Number

Connect Time

Conversation Time

Method of Recording

From RAO

Rate Class

Message Type

Billing Indicators

Bill to Number

7.1.2 BellSouth will perform duplicate record checks on EODUF records processed to O DUF. Any duplicate messages detected will be deleted and not sent to Level 3.

7.1.3 In the event that Level 3 detects a duplicate on EODUF they receive from BellSouth, Level 3 will drop the duplicate message (Level 3 will not return the duplicate to BellSouth).

7.2 Physical File Characteristics

7.2.1 The EODUF feed will be distributed to Level 3 via Connect: Direct, Secure File Transfer Protocol (FTP)or another mutually agreed medium. The EODUF messages will be intermingled among Level 3's Optional Daily Usage File (ODUF) messages. The EODUF will be a variable block format. The data on the EODUF will be in a non-compacted EMI format (175 byte format plus modules). It will be created on a daily basis Monday through Friday except holiday.

7.2.2 Data circuits (private line or dial-up) may be required between BellSouth and Level 3 for the purpose of data transmission as set forth in Section 6.2.2 above.

7.2.3 If Level 3 utilizes Secure File Transfer Protocol (FTP)for data file transmission, purchase of the Secure File Transfer Protocol (FTP)software will be the responsibility of Level 3.

7.3 Packing Specifications

7.3.1 A pack will contain a minimum of one message record or a maximum of 99,999 message records plus a pack header record and a pack trailer record. One transmission can contain a maximum of 99 packs and a minimum of one pack.

7.3.2 The OCN, From (RAO), and Invoice Number will control the invoice sequencing. The From RAO will be used to identify to Level 3 which BellSouth RAO is sending the message. BellSouth and Level 3 will use the invoice sequencing to control data

exchange. BellSouth will be notified of sequence failures identified by Level 3 and resend the data as appropriate.

The data will be packed using ATIS EMI Records.

| RESALE DISCOUNTS AND RATES - Alabama | | | | | | | | | | | | | | Attachment: 1 | | Exhibit: E | |
|---|---|---|---|---|---|---|---|---|---|---|---|---|---|---|---|---|---|
| CATEGORY | RATE ELEMENTS | Interim | Zone | BCS | USOC | RATES ($) | | | | | Svc Order Submitted Elec per LSR | Svc Order Submitted Manually per LSR | Incremental Charge - Manual Svc Order vs. Electronic-1st | Incremental Charge - Manual Svc Order vs. Electronic-Add'l | Incremental Charge - Manual Svc Order vs. Electronic-Disc 1st | Incremental Charge - Manual Svc Order vs. Electronic-Disc Add'l |
| | | | | | | Rec | Nonrecurring | | Nonrecurring Disconnect | | OSS Rates ($) | | | | | |
| | | | | | | | First | Add'l | First | Add'l | SOMEC | SOMAN | SOMAN | SOMAN | SOMAN | SOMAN |
| APPLICABLE DISCOUNTS | | | | | | | | | | | | | | | | |
| | Residence % | | | | | 16.30 | | | | | | | | | | |
| | Business % | | | | | 16.30 | | | | | | | | | | |
| | CSAs % | | | | | 16.30 | | | | | | | | | | |
| OPERATIONAL SUPPORT SYSTEMS (OSS) - "REGIONAL RATES" | | | | | | | | | | | | | | | | |
| NOTE: (1) CLEC should contact its contract negotiator if it prefers the "state specific" OSS charges as ordered by the State Commissions. The OSS charges currently contained in this rate exhibit are the BellSouth "regional" service ordering charges. CLEC may elect either the state specific Commission ordered rates for the service ordering charges, or CLEC may elect the regional service ordering charge, however, CLEC can not obtain a mixture of the two regardless if CLEC has a interconnection contract established in | | | | | | | | | | | | | | | | |
| | OSS - Electronic Service Order Charge, Per Local Service Request (LSR) - Resale Only | | | | SOMEC | | 3.50 | 0.00 | 3.50 | 0.00 | | | | | | |
| | OSS - Manual Service Order Charge, Per Local Service Request (LSR) - Resale Only | | | | SOMAN | | 19.99 | 0.00 | 19.99 | 0.00 | | | | | | |
| SELECTIVE CALL ROUTING USING LINE CLASS CODES (SCR-LCC) | | | | | | | | | | | | | | | | |
| | Selective Routing Per Unique Line Class Code Per Request Per Switch | | | | | | 84.70 | 84.70 | 14.11 | 14.11 | | | | | | |
| ODUF/EODUF SERVICES | | | | | | | | | | | | | | | | |
| | OPTIONAL DAILY USAGE FILE (ODUF) | | | | | | | | | | | | | | | |
| | ODUF: Recording, per message | | | | | 0.000011 | | | | | | | | | | |
| | ODUF: Message Processing, per message | | | | | 0.004101 | | | | | | | | | | |
| | ODUF: Message Processing, per Magnetic Tape provisioned | | | | | 42.67 | | | | | | | | | | |
| | ODUF: Data Transmission (CONNECT:DIRECT), per message | | | | | 0.000094 | | | | | | | | | | |
| | ENHANCED OPTIONAL DAILY USAGE FILE (EODUF) | | | | | | | | | | | | | | | |
| | EODUF: Message Processing, per message | | | | | 0.22 | | | | | | | | | | |

| RESALE DISCOUNTS AND RATES - Florida | | | | | | | | | | | | | | Attachment: 1 | | Exhibit: E | |
|---|---|---|---|---|---|---|---|---|---|---|---|---|---|---|---|---|---|
| CATEGORY | | RATE ELEMENTS | Interim | Zone | BCS | USOC | RATES ($) | | | | | Svc Order Submitted Elec per LSR | Svc Order Submitted Manually per LSR | Incremental Charge - Manual Svc Order vs. Electronic-1st | Incremental Charge - Manual Svc Order vs. Electronic-Add'l | Incremental Charge - Manual Svc Order vs. Electronic-Disc 1st | Incremental Charge - Manual Svc Order vs. Electronic-Disc Add'l |
| | | | | | | | Rec | Nonrecurring | | Nonrecurring Disconnect | | OSS Rates ($) | | | | | |
| | | | | | | | | First | Add'l | First | Add'l | SOMEC | SOMAN | SOMAN | SOMAN | SOMAN | SOMAN |
| APPLICABLE DISCOUNTS | | | | | | | | | | | | | | | | | |
| | | Residence % | | | | | 21.83 | | | | | | | | | | |
| | | Business % | | | | | 16.81 | | | | | | | | | | |
| | | CSAs % | | | | | 16.81 | | | | | | | | | | |
| OPERATIONAL SUPPORT SYSTEMS (OSS) - "REGIONAL RATES" | | | | | | | | | | | | | | | | | |
| | | NOTE: (1) CLEC should contact its contract negotiator if it prefers the "state specific" OSS charges as ordered by the State Commissions. The OSS charges currently contained in this rate exhibit are the BellSouth "regional" service ordering charges. CLEC may elect either the state specific Commission ordered rates for the service ordering charges, or CLEC may elect the regional service ordering charge, however, CLEC can not obtain a mixture of the two regardless if CLEC has a interconnection contract established in | | | | | | | | | | | | | | | |
| | | OSS - Electronic Service Order Charge, Per Local Service Request (LSR) - Resale Only | | | | SOMEC | | 3.50 | 0.00 | 3.50 | 0.00 | | | | | | |
| | | OSS - Manual Service Order Charge, Per Local Service Request (LSR) - Resale Only | | | | SOMAN | | 19.99 | 0.00 | 19.99 | 0.00 | | | | | | |
| SELECTIVE CALL ROUTING USING LINE CLASS CODES (SCR-LCC) | | | | | | | | | | | | | | | | | |
| | | Selective Routing Per Unique Line Class Code Per Request Per Switch | | | | | | 93.55 | 93.55 | 12.71 | 12.71 | | | | | | |
| ODUF/EODUF SERVICES | | | | | | | | | | | | | | | | | |
| | | OPTIONAL DAILY USAGE FILE (ODUF) | | | | | | | | | | | | | | | |
| | | ODUF: Recording, per message | | | | | 0.0000071 | | | | | | | | | | |
| | | ODUF: Message Processing, per message | | | | | 0.002146 | | | | | | | | | | |
| | | ODUF: Message Processing, per Magnetic Tape provisioned | | | | | 35.91 | | | | | | | | | | |
| | | ODUF: Data Transmission (CONNECT:DIRECT), per message | | | | | 0.00010375 | | | | | | | | | | |
| | | ENHANCED OPTIONAL DAILY USAGE FILE (EODUF) | | | | | | | | | | | | | | | |
| | | EODUF: Message Processing, per message | | | | | 0.080698 | | | | | | | | | | |

| RESALE DISCOUNTS AND RATES - Georgia | | | | | | | | | | | | | | Attachment: 1 | | Exhibit: E | |
|---|---|---|---|---|---|---|---|---|---|---|---|---|---|---|---|---|---|
| CATEGORY | | RATE ELEMENTS | Interim | Zone | BCS | USOC | RATES ($) | | | | | Svc Order Submitted Elec per LSR | Svc Order Submitted Manually per LSR | Incremental Charge - Manual Svc Order vs. Electronic- 1st | Incremental Charge - Manual Svc Order vs. Electronic- Add'l | Incremental Charge - Manual Svc Order vs. Electronic- Disc 1st | Incremental Charge - Manual Svc Order vs. Electronic- Disc Add'l |
| | | | | | | | Rec | Nonrecurring | | Nonrecurring Disconnect | | OSS Rates ($) | | | | | |
| | | | | | | | | First | Add'l | First | Add'l | SOMEC | SOMAN | SOMAN | SOMAN | SOMAN | SOMAN |
| APPLICABLE DISCOUNTS | | | | | | | | | | | | | | | | | |
| | | Residence % | | | | | 20.30 | | | | | | | | | | |
| | | Business % | | | | | 17.30 | | | | | | | | | | |
| | | CSAs % | | | | | 17.30 | | | | | | | | | | |
| OPERATIONAL SUPPORT SYSTEMS (OSS) - "REGIONAL RATES" | | | | | | | | | | | | | | | | | |
| | NOTE: (1) CLEC should contact its contract negotiator if it prefers the "state specific" OSS charges as ordered by the State Commissions. The OSS charges currently contained in this rate exhibit are the BellSouth "regional" service ordering charges. CLEC may elect either the state specific Commission ordered rates for the service ordering charges, or CLEC may elect the regional service ordering charge, however, CLEC can not obtain a mixture of the two regardless if CLEC has a interconnection contract established in | | | | | | | | | | | | | | | | |
| | | OSS - Electronic Service Order Charge, Per Local Service Request (LSR) - Resale Only | | | | SOMEC | | 3.50 | 0.00 | 3.50 | 0.00 | | | | | | |
| | | OSS - Manual Service Order Charge, Per Local Service Request (LSR) - Resale Only | | | | SOMAN | | 19.99 | 0.00 | 19.99 | 0.00 | | | | | | |
| SELECTIVE CALL ROUTING USING LINE CLASS CODES (SCR-LCC) | | | | | | | | | | | | | | | | | |
| | | Selective Routing Per Unique Line Class Code Per Request Per Switch | | | | | | 102.19 | 61.15 | 12.68 | 6.34 | | | | | | |
| ODUF/EODUF SERVICES | | | | | | | | | | | | | | | | | |
| | OPTIONAL DAILY USAGE FILE (ODUF) | | | | | | | | | | | | | | | | |
| | | ODUF: Recording, per message | | | | | 0.0000068 | | | | | | | | | | |
| | | ODUF: Message Processing, per message | | | | | 0.002167 | | | | | | | | | | |
| | | ODUF: Message Processing, per Magnetic Tape provisioned | | | | | 36.06 | | | | | | | | | | |
| | | ODUF: Data Transmission (CONNECT:DIRECT), per message | | | | | 0.00010856 | | | | | | | | | | |
| | ENHANCED OPTIONAL DAILY USAGE FILE (EODUF) | | | | | | | | | | | | | | | | |
| | | EODUF: Message Processing, per message | | | | | 0.227409 | | | | | | | | | | |

| RESALE DISCOUNTS AND RATES - Kentucky | | | | | | | | | | | | | Attachment: 1 | | Exhibit: E | |
|---|---|---|---|---|---|---|---|---|---|---|---|---|---|---|---|---|
| CATEGORY | | RATE ELEMENTS | Interim | Zone | BCS | USOC | RATES ($) | | | | | Svc Order Submitted Elec per LSR | Svc Order Submitted Manually per LSR | Incremental Charge - Manual Svc Order vs. Electronic-1st | Incremental Charge - Manual Svc Order vs. Electronic-Add'l | Incremental Charge - Manual Svc Order vs. Electronic-Disc 1st | Incremental Charge - Manual Svc Order vs. Electronic-Disc Add'l |
| | | | | | | | Rec | Nonrecurring | | Nonrecurring Disconnect | | OSS Rates ($) | | | | | |
| | | | | | | | | First | Add'l | First | Add'l | SOMEC | SOMAN | SOMAN | SOMAN | SOMAN | SOMAN |
| APPLICABLE DISCOUNTS | | | | | | | | | | | | | | | | | |
| | | Residence % | | | | | 16.79 | | | | | | | | | | |
| | | Business % | | | | | 15.54 | | | | | | | | | | |
| | | CSAs % | | | | | 15.54 | | | | | | | | | | |
| OPERATIONAL SUPPORT SYSTEMS (OSS) - "REGIONAL RATES" | | | | | | | | | | | | | | | | | |
| | NOTE: (1) CLEC should contact its contract negotiator if it prefers the "state specific" OSS charges as ordered by the State Commissions. The OSS charges currently contained in this rate exhibit are the BellSouth "regional" service ordering charges. CLEC may elect either the state specific Commission ordered rates for the service ordering charges, or CLEC may elect the regional service ordering charge, however, CLEC can not obtain a mixture of the two regardless if CLEC has a interconnection contract established in | | | | | | | | | | | | | | | | |
| | | OSS - Electronic Service Order Charge, Per Local Service Request (LSR) - Resale Only | | | | SOMEC | | 3.50 | 0.00 | 3.50 | 0.00 | | | | | | |
| | | OSS - Manual Service Order Charge, Per Local Service Request (LSR) - Resale Only | | | | SOMAN | | 19.99 | 0.00 | 19.99 | 0.00 | | | | | | |
| SELECTIVE CALL ROUTING USING LINE CLASS CODES (SCR-LCC) | | | | | | | | | | | | | | | | | |
| | | Selective Routing Per Unique Line Class Code Per Request Per Switch | | | | | | 93.53 | 93.53 | 15.58 | 15.58 | | | | | | |
| ODUF/EODUF SERVICES | | | | | | | | | | | | | | | | | |
| | OPTIONAL DAILY USAGE FILE (ODUF) | | | | | | | | | | | | | | | | |
| | | ODUF: Recording, per message | | | | | 0.0000136 | | | | | | | | | | |
| | | ODUF: Message Processing, per message | | | | | 0.002506 | | | | | | | | | | |
| | | ODUF: Message Processing, per Magnetic Tape provisioned | | | | | 35.90 | | | | | | | | | | |
| | | ODUF: Data Transmission (CONNECT:DIRECT), per message | | | | | 0.00010372 | | | | | | | | | | |
| | ENHANCED OPTIONAL DAILY USAGE FILE (EODUF) | | | | | | | | | | | | | | | | |
| | | EODUF: Message Processing, per message | | | | | 0.235889 | | | | | | | | | | |

| RESALE DISCOUNTS AND RATES - Louisiana | | | | | | | | | | | | | | Attachment: 1 | | Exhibit: E | |
|---|---|---|---|---|---|---|---|---|---|---|---|---|---|---|---|---|---|
| CATEGORY | | RATE ELEMENTS | Interim | Zone | BCS | USOC | RATES ($) | | | | | Svc Order Submitted Elec per LSR | Svc Order Submitted Manually per LSR | Incremental Charge - Manual Svc Order vs. Electronic- 1st | Incremental Charge - Manual Svc Order vs. Electronic- Add'l | Incremental Charge - Manual Svc Order vs. Electronic- Disc 1st | Incremental Charge - Manual Svc Order vs. Electronic- Disc Add'l |
| | | | | | | | Rec | Nonrecurring | | Nonrecurring Disconnect | | OSS Rates ($) | | | | | |
| | | | | | | | | First | Add'l | First | Add'l | SOMEC | SOMAN | SOMAN | SOMAN | SOMAN | SOMAN |
| APPLICABLE DISCOUNTS | | | | | | | | | | | | | | | | | |
| | | Residence % | | | | | 20.72 | | | | | | | | | | |
| | | Business % | | | | | 20.72 | | | | | | | | | | |
| | | CSAs % | | | | | 9.05 | | | | | | | | | | |
| OPERATIONAL SUPPORT SYSTEMS (OSS) - "REGIONAL RATES" | | | | | | | | | | | | | | | | | |
| | NOTE: (1) CLEC should contact its contract negotiator if it prefers the "state specific" OSS charges as ordered by the State Commissions. The OSS charges currently contained in this rate exhibit are the BellSouth "regional" service ordering charges. CLEC may elect either the state specific Commission ordered rates for the service ordering charges, or CLEC may elect the regional service ordering charge, however, CLEC can not obtain a mixture of the two regardless if CLEC has a interconnection contract established in | | | | | | | | | | | | | | | | |
| | | OSS - Electronic Service Order Charge, Per Local Service Request (LSR) - Resale Only | | | | SOMEC | | 3.50 | 0.00 | 3.50 | 0.00 | | | | | | |
| | | OSS - Manual Service Order Charge, Per Local Service Request (LSR) - Resale Only | | | | SOMAN | | 19.99 | 0.00 | 19.99 | 0.00 | | | | | | |
| SELECTIVE CALL ROUTING USING LINE CLASS CODES (SCR-LCC) | | | | | | | | | | | | | | | | | |
| | | Selective Routing Per Unique Line Class Code Per Request Per Switch | | | | | | 82.25 | 82.25 | | | | | | | | |
| ODUF/EODUF SERVICES | | | | | | | | | | | | | | | | | |
| | OPTIONAL DAILY USAGE FILE (ODUF) | | | | | | | | | | | | | | | | |
| | | ODUF: Recording, per message | | | | | 0.0000117 | | | | | | | | | | |
| | | ODUF: Message Processing, per message | | | | | 0.004641 | | | | | | | | | | |
| | | ODUF: Message Processing, per Magnetic Tape provisioned | | | | | 48.45 | | | | | | | | | | |
| | | ODUF: Data Transmission (CONNECT:DIRECT), per message | | | | | 0.00010568 | | | | | | | | | | |
| | ENHANCED OPTIONAL DAILY USAGE FILE (EODUF) | | | | | | | | | | | | | | | | |
| | | EODUF: Message Processing, per message | | | | | 0.250015 | | | | | | | | | | |

| RESALE DISCOUNTS AND RATES - Mississippi | | | | | | | | | | | | | | Attachment: 1 | | Exhibit: E | |
|---|---|---|---|---|---|---|---|---|---|---|---|---|---|---|---|---|---|
| CATEGORY | | RATE ELEMENTS | Interim | Zone | BCS | USOC | RATES ($) | | | | | Svc Order Submitted Elec per LSR | Svc Order Submitted Manually per LSR | Incremental Charge - Manual Svc Order vs. Electronic- 1st | Incremental Charge - Manual Svc Order vs. Electronic- Add'l | Incremental Charge - Manual Svc Order vs. Electronic- Disc 1st | Incremental Charge - Manual Svc Order vs. Electronic- Disc Add'l |
| | | | | | | | Rec | Nonrecurring | | Nonrecurring Disconnect | | OSS Rates ($) | | | | | |
| | | | | | | | | First | Add'l | First | Add'l | SOMEC | SOMAN | SOMAN | SOMAN | SOMAN | SOMAN |
| APPLICABLE DISCOUNTS | | | | | | | | | | | | | | | | | |
| | | Residence % | | | | | 15.75 | | | | | | | | | | |
| | | Business % | | | | | 15.75 | | | | | | | | | | |
| | | CSAs % | | | | | 15.75 | | | | | | | | | | |
| OPERATIONAL SUPPORT SYSTEMS (OSS) - "REGIONAL RATES" | | | | | | | | | | | | | | | | | |
| | NOTE: (1) CLEC should contact its contract negotiator if it prefers the "state specific" OSS charges as ordered by the State Commissions. The OSS charges currently contained in this rate exhibit are the BellSouth "regional" service ordering charges. CLEC may elect either the state specific Commission ordered rates for the service ordering charges, or CLEC may elect the regional service ordering charge, however, CLEC can not obtain a mixture of the two regardless if CLEC has a interconnection contract established in | | | | | | | | | | | | | | | | |
| | | OSS - Electronic Service Order Charge, Per Local Service Request (LSR) - Resale Only | | | | SOMEC | | 3.50 | 0.00 | 3.50 | 0.00 | | | | | | |
| | | OSS - Manual Service Order Charge, Per Local Service Request (LSR) - Resale Only | | | | SOMAN | | 19.99 | 0.00 | 19.99 | 0.00 | | | | | | |
| SELECTIVE CALL ROUTING USING LINE CLASS CODES (SCR-LCC) | | | | | | | | | | | | | | | | | |
| | | Selective Routing Per Unique Line Class Code Per Request Per Switch | | | | | | 85.19 | 85.19 | 14.19 | 14.19 | | | | | | |
| ODUF/EODUF SERVICES | | | | | | | | | | | | | | | | | |
| | OPTIONAL DAILY USAGE FILE (ODUF) | | | | | | | | | | | | | | | | |
| | | ODUF: Recording, per message | | | | | 0.0000063 | | | | | | | | | | |
| | | ODUF: Message Processing, per message | | | | | 0.004707 | | | | | | | | | | |
| | | ODUF: Message Processing, per Magnetic Tape provisioned | | | | | 49.04 | | | | | | | | | | |
| | | ODUF: Data Transmission (CONNECT:DIRECT), per message | | | | | 0.00010669 | | | | | | | | | | |
| | ENHANCED OPTIONAL DAILY USAGE FILE (EODUF) | | | | | | | | | | | | | | | | |
| | | EODUF: Message Processing, per message | | | | | 0.250424 | | | | | | | | | | |

| RESALE DISCOUNTS AND RATES - North Carolina | | | | | | | | | | | | | | Attachment: 1 | | Exhibit: E | |
|---|---|---|---|---|---|---|---|---|---|---|---|---|---|---|---|---|---|
| CATEGORY | | RATE ELEMENTS | Interim | Zone | BCS | USOC | RATES ($) | | | | | Svc Order Submitted Elec per LSR | Svc Order Submitted Manually per LSR | Incremental Charge - Manual Svc Order vs. Electronic-1st | Incremental Charge - Manual Svc Order vs. Electronic-Add'l | Incremental Charge - Manual Svc Order vs. Electronic-Disc 1st | Incremental Charge - Manual Svc Order vs. Electronic-Disc Add'l |
| | | | | | | | Rec | Nonrecurring | | Nonrecurring Disconnect | | OSS Rates ($) | | | | | |
| | | | | | | | | First | Add'l | First | Add'l | SOMEC | SOMAN | SOMAN | SOMAN | SOMAN | SOMAN |
| APPLICABLE DISCOUNTS | | | | | | | | | | | | | | | | | |
| | | Residence % | | | | | 21.50 | | | | | | | | | | |
| | | Business % | | | | | 17.60 | | | | | | | | | | |
| | | CSAs % | | | | | 17.60 | | | | | | | | | | |
| OPERATIONAL SUPPORT SYSTEMS (OSS) - "REGIONAL RATES" | | | | | | | | | | | | | | | | | |
| | NOTE: (1) CLEC should contact its contract negotiator if it prefers the "state specific" OSS charges as ordered by the State Commissions. The OSS charges currently contained in this rate exhibit are the BellSouth "regional" service ordering charges. CLEC may elect either the state specific Commission ordered rates for the service ordering charges, or CLEC may elect the regional service ordering charge, however, CLEC can not obtain a mixture of the two regardless if CLEC has a interconnection contract established in | | | | | | | | | | | | | | | | |
| | | OSS - Electronic Service Order Charge, Per Local Service Request (LSR) - Resale Only | | | | SOMEC | | 3.50 | 0.00 | 3.50 | 0.00 | | | | | | |
| | | OSS - Manual Service Order Charge, Per Local Service Request (LSR) - Resale Only | | | | SOMAN | | 19.99 | 0.00 | 19.99 | 0.00 | | | | | | |
| SELECTIVE CALL ROUTING USING LINE CLASS CODES (SCR-LCC) | | | | | | | | | | | | | | | | | |
| | | Selective Routing Per Unique Line Class Code Per Request Per Switch | | | | | | 188.59 | | | | | | | | | |
| ODUF/EODUF SERVICES | | | | | | | | | | | | | | | | | |
| | OPTIONAL DAILY USAGE FILE (ODUF) | | | | | | | | | | | | | | | | |
| | | ODUF: Recording, per message | | | | | 0.0003 | | | | | | | | | | |
| | | ODUF: Message Processing, per message | | | | | 0.0032 | | | | | | | | | | |
| | | ODUF: Message Processing, per Magnetic Tape provisioned | | | | | 54.61 | | | | | | | | | | |
| | | ODUF: Data Transmission (CONNECT:DIRECT), per message | | | | | 0.00004 | | | | | | | | | | |
| | ENHANCED OPTIONAL DAILY USAGE FILE (EODUF) | | | | | | | | | | | | | | | | |
| | | EODUF: Message Processing, per message | | | | | 0.2285406 | | | | | | | | | | |

## RESALE DISCOUNTS AND RATES - South Carolina

| CATEGORY | RATE ELEMENTS | Interim | Zone | BCS | USOC | RATES ($) | | | | | Svc Order Submitted Elec per LSR | Svc Order Submitted Manually per LSR | Attachment: 1 Incremental Charge - Manual Svc Order vs. Electronic- 1st | Attachment: 1 Incremental Charge - Manual Svc Order vs. Electronic- Add'l | Exhibit: E Incremental Charge - Manual Svc Order vs. Electronic- Disc 1st | Exhibit: E Incremental Charge - Manual Svc Order vs. Electronic- Disc Add'l |
|---|---|---|---|---|---|---|---|---|---|---|---|---|---|---|---|---|
| | | | | | | Rec | Nonrecurring | | Nonrecurring Disconnect | | OSS Rates ($) | | | | | |
| | | | | | | | First | Add'l | First | Add'l | SOMEC | SOMAN | SOMAN | SOMAN | SOMAN | SOMAN |
| **APPLICABLE DISCOUNTS** | | | | | | | | | | | | | | | | |
| | Residence % | | | | | 14.80 | | | | | | | | | | |
| | Business % | | | | | 14.80 | | | | | | | | | | |
| | CSAs % | | | | | 8.98 | | | | | | | | | | |
| **OPERATIONAL SUPPORT SYSTEMS (OSS) - "REGIONAL RATES"** | | | | | | | | | | | | | | | | |
| | **NOTE: (1) CLEC should contact its contract negotiator if it prefers the "state specific" OSS charges as ordered by the State Commissions. The OSS charges currently contained in this rate exhibit are the BellSouth "regional" service ordering charges. CLEC may elect either the state specific Commission ordered rates for the service ordering charges, or CLEC may elect the regional service ordering charge, however, CLEC can not obtain a mixture of the two regardless if CLEC has a interconnection contract established in** | | | | | | | | | | | | | | | |
| | OSS - Electronic Service Order Charge, Per Local Service Request (LSR) - Resale Only | | | | SOMEC | | 3.50 | 0.00 | 3.50 | 0.00 | | | | | | |
| | OSS - Manual Service Order Charge, Per Local Service Request (LSR) - Resale Only | | | | SOMAN | | 19.99 | 0.00 | 19.99 | 0.00 | | | | | | |
| **SELECTIVE CALL ROUTING USING LINE CLASS CODES (SCR-LCC)** | | | | | | | | | | | | | | | | |
| | Selective Routing Per Unique Line Class Code Per Request Per Switch | | | | | | 84.89 | 84.89 | 14.14 | 14.14 | | | | | | |
| **ODUF/EODUF SERVICES** | | | | | | | | | | | | | | | | |
| | **OPTIONAL DAILY USAGE FILE (ODUF)** | | | | | | | | | | | | | | | |
| | ODUF: Recording, per message | | | | | 0.0000216 | | | | | | | | | | |
| | ODUF: Message Processing, per message | | | | | 0.004704 | | | | | | | | | | |
| | ODUF: Message Processing, per Magnetic Tape provisioned | | | | | 48.87 | | | | | | | | | | |
| | ODUF: Data Transmission (CONNECT:DIRECT), per message | | | | | 0.00010863 | | | | | | | | | | |
| | **ENHANCED OPTIONAL DAILY USAGE FILE (EODUF)** | | | | | | | | | | | | | | | |
| | EODUF: Message Processing, per message | | | | | 0.258301 | | | | | | | | | | |

| RESALE DISCOUNTS AND RATES - Tennessee | | | | | | | | | | | | | | Attachment: 1 | | Exhibit: E | |
|---|---|---|---|---|---|---|---|---|---|---|---|---|---|---|---|---|---|
| CATEGORY | | RATE ELEMENTS | Interim | Zone | BCS | USOC | RATES ($) | | | | | Svc Order Submitted Elec per LSR | Svc Order Submitted Manually per LSR | Incremental Charge - Manual Svc Order vs. Electronic-1st | Incremental Charge - Manual Svc Order vs. Electronic-Add'l | Incremental Charge - Manual Svc Order vs. Electronic-Disc 1st | Incremental Charge - Manual Svc Order vs. Electronic-Disc Add'l |
| | | | | | | | Rec | Nonrecurring | | Nonrecurring Disconnect | | OSS Rates ($) | | | | | |
| | | | | | | | | First | Add'l | First | Add'l | SOMEC | SOMAN | SOMAN | SOMAN | SOMAN | SOMAN |
| APPLICABLE DISCOUNTS | | | | | | | | | | | | | | | | | |
| | | Residence % | | | | | 16.00 | | | | | | | | | | |
| | | Business % | | | | | 16.00 | | | | | | | | | | |
| | | CSAs % | | | | | 16.00 | | | | | | | | | | |
| OPERATIONAL SUPPORT SYSTEMS (OSS) - "REGIONAL RATES" | | | | | | | | | | | | | | | | | |
| | NOTE: (1) CLEC should contact its contract negotiator if it prefers the "state specific" OSS charges as ordered by the State Commissions. The OSS charges currently contained in this rate exhibit are the BellSouth "regional" service ordering charges. CLEC may elect either the state specific Commission ordered rates for the service ordering charges, or CLEC may elect the regional service ordering charge, however, CLEC can not obtain a mixture of the two regardless if CLEC has a interconnection contract established in | | | | | | | | | | | | | | | | |
| | | OSS - Electronic Service Order Charge, Per Local Service Request (LSR) - Resale Only | | | | SOMEC | | 3.50 | 0.00 | 3.50 | 0.00 | | | | | | |
| | | OSS - Manual Service Order Charge, Per Local Service Request (LSR) - Resale Only | | | | SOMAN | | 19.99 | 0.00 | 19.99 | 0.00 | | | | | | |
| SELECTIVE CALL ROUTING USING LINE CLASS CODES (SCR-LCC) | | | | | | | | | | | | | | | | | |
| | | Selective Routing Per Unique Line Class Code Per Request Per Switch | | | | | | 179.60 | 179.60 | | | | | | | | |
| ODUF/EODUF SERVICES | | | | | | | | | | | | | | | | | |
| | OPTIONAL DAILY USAGE FILE (ODUF) | | | | | | | | | | | | | | | | |
| | | ODUF: Recording, per message | | | | | 0.0000044 | | | | | | | | | | |
| | | ODUF: Message Processing, per message | | | | | 0.0027366 | | | | | | | | | | |
| | | ODUF: Message Processing, per Magnetic Tape provisioned | | | | | 52.75 | | | | | | | | | | |
| | | ODUF: Data Transmission (CONNECT:DIRECT), per message | | | | | 0.0000339 | | | | | | | | | | |
| | ENHANCED OPTIONAL DAILY USAGE FILE (EODUF) | | | | | | | | | | | | | | | | |
| | | EODUF: Message Processing, per message | | | | | 0.004 | | | | | | | | | | |

# Attachment 2

# Network Elements and Other Services

# TABLE OF CONTENTS

1 INTRODUCTION ..... 3

2 UNBUNDLED LOOPS ..... 5

3 LINE SHARING ..... 27

4 LOCAL SWITCHING ..... 33

5 UNBUNDLED NETWORK ELEMENT COMBINATIONS ..... 41

6 TRANSPORT, CHANNELIZATION AND DARK FIBER ..... 44

7 DATABASES ..... 49

8 BELLSOUTH SWITCHED ACCESS (SWA) 8XX TOLL FREE DIALING TEN DIGIT SCREENING SERVICE ..... 50

9 LINE INFORMATION DATABASE (LIDB) ..... 50

10 SIGNALING ..... 52

11 AUTOMATIC LOCATION IDENTIFICATION/DATA MANAGEMENT SYSTEM (ALI/DMS) ..... 58

12 CALLING NAME (CNAM) DATABASE SERVICE ..... 59

13 SERVICE CREATION ENVIRONMENT AND SERVICE MANAGEMENT SYSTEM (SCE/SMS) ADVANCED INTELLIGENT NETWORK (AIN) ACCESS ..... 60

14 OPERATIONAL SUPPORT SYSTEMS (OSS) ..... 60

Rates ..... Exhibit A

## ACCESS TO NETWORK ELEMENTS AND OTHER SERVICES

### 1 Introduction

1.1 This Attachment sets forth rates, terms and conditions for Network Elements and combinations of Network Elements that BellSouth agrees to offer to Level 3 in accordance with its obligations under Section 251(c)(3) of the Act. Additionally, this Attachment sets forth the rates, terms and conditions for other facilities and services BellSouth makes available to Level 3 (Other Services). The rates for each Network Element and combination of Network Elements and Other Services are set forth in Exhibit A of this Attachment. Additionally, the provision of a particular Network Element or Other Service may require Level 3 to purchase other Network Elements or services. In the event of a conflict between this Attachment and any other section or provision of this Agreement, the provisions of this Attachment shall control.

1.2 For purposes of this Agreement, "Network Element" is defined to mean a facility or equipment Level 3 used in the provision of a qualifying service, as defined by the FCC. Level 3 may not access a Network Element for the sole purpose of providing non-qualifying services as defined by the FCC. For purposes of this Agreement, combinations of Network Elements shall be referred to as "Combinations."

1.3 BellSouth shall, upon request of Level 3, and to the extent technically feasible, provide to Level 3 access to its Network Elements for the provision of Level 3's qualifying services. If no rate is identified in this Agreement, the rate will be as set forth in the applicable BellSouth tariff or as negotiated by the Parties upon request by either Party.

1.4 Level 3 may purchase and use Network Elements and Other Services from BellSouth in accordance with 47 C.F.R 51.309.

1.5 BellSouth shall comply with the requirements as set forth in the technical references within this Attachment 2.

1.6 Except to the extent required the Report and Order on Remand and Further Notice of Proposed Rulemaking (rel. Aug. 21, 2003) ("TRO"), any Network Elements that no longer require unbundling on a national level will no longer be available pursuant to this Agreement.

1.7 Upon request, BellSouth shall convert a wholesale service, or group of wholesale services, to the equivalent unbundled Network Element, or combination of elements that is available to Level 3 under Section 251(c)(3) of the Telecommunications Act of 1996. Nonrecurring switch-as-is rates for conversion of Network Elements are contained in Exhibit A of this Attachment. Conversion of a wholesale service or group of wholesale services shall be considered termination for purposes of any volume and/or term commitments and/or

grandfathered status between Level 3 and BellSouth. Any change from a wholesale service to a Network Element that requires a physical rearrangement of the Network Element will not be considered a conversion for purposes of this Agreement.

1.8 Except to the extent expressly provided otherwise in this Attachment, for elements or combinations of elements that are no longer offered pursuant to, or are not in compliance with, the terms set forth in this Agreement (for example, but not limited to, local channels or non-compliant EELs), Level 3 will submit orders to rearrange or disconnect those arrangements or services within thirty (30) calendar days of the Effective Date of this Agreement.

If orders to rearrange or disconnect those arrangements or services are not received by the 31st day after the Effective Date of this Agreement, BellSouth may disconnect those arrangements or services without further notice, or within the transition period required under applicable law, whichever is longer.

Where no re-termination or physical rearrangement of circuits or service is required, Level 3 will be charged a nonrecurring switch-as-is charge for the individual Network Element(s) as set forth in Exhibit A. For arrangements that require a re-termination or other physical rearrangement of circuits to comply with the terms of this Agreement, nonrecurring charges for the applicable Network Element from Exhibit A of this Attachment will apply. To the extent a Network Element requires re-termination or other physical rearrangement in order to comply with a tariff or separate agreement, the applicable rates, terms and conditions of such tariff or separate agreement shall apply.

1.8.1 Level 3 may utilize Network Elements and Other Services to provide services consistent with 47 C.F.R. § 51.309 and Commission orders as long as such services are consistent with industry standards and applicable BellSouth Technical References.

1.8.2 Routine Network Modifications

Except to the extent expressly provided otherwise in this Attachment, If a UNE is not readily available but can be made available through routine network modifications, BellSouth will make such routine network modifications, as defined by the FCC in 47 CFR 51.319 (a) (8) and (e) (5).

1.8.3 Notwithstanding any other provision of this Agreement, BellSouth will not commingle or combine Network Elements or combinations of Network Elements with any service, network element or other offering that it is obligated to make available only pursuant to Section 271 of the Act.

**1.9 Commingling of Services**

1.9.1 Commingling means the connecting, attaching, or otherwise linking of a Network Element, or a Network Element combination, to one or more telecommunications services or facilities that Level 3 has obtained at wholesale from BellSouth, or the

combining of a Network Element or Network Element combination with one or more such wholesale telecommunications services or facilities.

1.9.2 Subject to the limitations set forth elsewhere in this Attachment, BellSouth shall not deny access to a Network Element or a combination of Network Elements on the grounds that one or more of the elements: 1) is connected to, attached to, linked to, or combined with such a facility or service obtained from BellSouth; or 2) shares part of BellSouth's network with access services or inputs for non-qualifying services.

1.9.3 BellSouth will not "ratchet" a commingled circuit. Unless otherwise agreed to by the Parties, the Network Element portion of such circuit will be billed at the rates set forth in this Agreement and the remainder of the circuit or service will be billed in accordance with BellSouth's tariffed rates.

1.9.4 When multiplexing equipment is attached to a commingled circuit, the multiplexing equipment and Central Office Channel Interfaces will be billed from the same jurisdictional authorization (agreement or tariff) as the higher grade of service.

1.10 If Level 3 reports a trouble on a Network Element or Other Service and no trouble actually exists on the BellSouth portion, BellSouth will charge Level 3 for any dispatching and testing (both inside and outside the Central Office (CO)) required by BellSouth in order to confirm the working status.

1.11 Rates

1.11.1 The prices that Level 3 shall pay to BellSouth for Network Elements and Other Services are set forth in Exhibit A to this Attachment. If Level 3 purchases a service(s) from a tariff, all terms and conditions and rates as set forth in such tariff shall apply.

1.11.2 Rates, terms and conditions for order cancellation charges and Service Date Advancement Charges will apply in accordance with Attachment 6 and are incorporated herein by this reference.

1.11.3 If Level 3 modifies an order (Order Modification Charge (OMC)) after being sent a Firm Order Confirmation (FOC) from BellSouth, any costs incurred by BellSouth to accommodate the modification will be paid by Level 3 in accordance with FCC No. 1 Tariff, Section 5.

1.11.4 A one-month minimum billing period shall apply to all Network Elements and Other Services.

## 2 Unbundled Loops

2.1 General

2.1.1 The local loop Network Element (Loop) is defined as a transmission facility between a distribution frame (or its equivalent) in BellSouth's central office and the Loop demarcation point at an End User's customer premises, including inside wire owned by BellSouth. Facilities that do not terminate at a demarcation point at an End User customer premises, including, by way of example, but not limited to, facilities that terminate to another carrier's switch or premises, a cell site, Mobile Switching Center or base station, do not constitute Loops. The Loop Network Element includes all features, functions, and capabilities of the transmission facilities, including the network interface device, and attached electronics (except those used for the provision of advanced services, such as Digital Subscriber Line Access Multiplexers), optronics and intermediate devices (including repeaters and load coils) used to establish the transmission path to the End User's customer premises. Level 3 shall purchase the entire bandwidth of the Loop and, except as required herein or as otherwise agreed to by the Parties, BellSouth shall not subdivide the frequency of the Loop.

2.1.1.1 The Loop does not include any packet switched features, functions or capabilities.

2.1.1.2 As set forth in FCC rule 51.319(i), in new build (Greenfield) areas, where BellSouth has only deployed Fiber To The Home (FTTH) facilities, BellSouth is under no obligation to provide Loops.

2.1.1.3 In FTTH overbuild situations where BellSouth also has copper Loops, BellSouth will make those copper Loops available to Level 3 on an unbundled basis, until such time as BellSouth chooses to retire those copper Loops using the FCC's network disclosure requirements set forth in 251(c)(5) and 51.325-335 and any applicable State requirements. . In these cases, BellSouth will offer a 64kbps second voice grade channel over its FTTH facilities.

2.1.1.4 Furthermore, in FTTH overbuild areas, BellSouth is not obligated to ensure that copper Loops in that area are capable of transmitting signals prior to receiving a request for access to such Loops by Level 3. If a request is received by BellSouth for a copper Loop, BellSouth will restore the copper Loop to serviceable condition if technically feasible.

In these instances of Loop orders in an FTTH overbuild area, BellSouth's standard Loop provisioning interval will not apply, and the order will be handled on a project basis by which the Parties will negotiate the applicable provisioning interval.

2.1.1.5 A "hybrid loop" is a local loop composed of both fiber optic cable, usually in feeder plant, and copper wire or cable, usually in the distribution plant. For hybrid loops, where Level 3 seeks access to a hybrid loop for the provision of broadband services, BellSouth shall provide Level 3 with nondiscriminatory access to the time division multiplexing features, functions and capabilities of that hybrid loop, including DS1 or DS3, on an unbundled basis to establish a complete transmission path between BellSouth's central office and an End User's customer premises.

When Level 3 seeks access to a hybrid loop for the provision of narrowband services, Bell South will provide access pursuant to 51.319 (a) (2).

2.1.1.6 Level 3 may not purchase Loops or convert Special Access circuits to Loops if such Loops will be used to provide wireless telecommunications services.

2.1.2 The provisioning of a Loop to Level 3's collocation space will require cross office cabling and cross connections within the central office to connect the Loop to a local switch or to other transmission equipment. These cross connects are separate components that are not considered a part of the Loop, and thus, have a separate charge.

2.1.3 Where facilities are available, BellSouth will install Loops in compliance with BellSouth's Products and Services Interval Guide available at the website at http://www.interconnection.bellsouth.com. For orders of fifteen (15) or more Loops, the installation and any applicable Order Coordination as described below will be handled on a project basis, and the intervals will be set by the BellSouth project manager for that order. When Loops require a Service Inquiry (SI) prior to issuing the order to determine if facilities are available, the interval for the SI process is separate from the installation interval.

2.1.4 The Loop shall be provided to Level 3 in accordance with BellSouth's TR73600 Unbundled Local Loop Technical Specification and applicable industry standard technical references.

2.1.5 BellSouth will only provision, maintain and repair the Loops to the standards that are consistent with the type of Loop ordered.

2.1.5.1 When a BellSouth technician is required to be dispatched to provision the Loop, BellSouth will tag the Loop with the Circuit ID number and the name of the ordering CLEC. When a dispatch is not required to provision the Loop, BellSouth will tag the Loop on the next required visit to the End User's location. If Level 3 wants to ensure the Loop is tagged during the provisioning process for Loops that may not require a dispatch (e.g. UVL-SL1, UVL-SL2, and UCL-ND), Level 3 may order Loop Tagging. Rates for Loop Tagging are as set forth in Exhibit A of this Attachment.

2.1.5.2 In the event BellSouth must dispatch to the end-user's location more than once due to incorrect or incomplete information provided by Level 3 (e.g., incomplete address, incorrect contact name/number, etc.), BellSouth will bill Level 3 for each additional dispatch required to provision the circuit due to the incorrect/incomplete information provided. BellSouth will assess the applicable Trouble Determination rates from BellSouth's FCC or state tariffs.

2.1.6 **Loop Testing/Trouble Reporting**

2.1.6.1 Level 3 will be responsible for testing and isolating troubles on the Loops. Level 3 must test and isolate trouble to the BellSouth portion of a designed/non-designed

unbundled Loop (e.g., UVL-SL2, UCL-D, UVL-SL1, UCL-ND, etc.) before reporting repair to the UNE Customer Wholesale Interconnection Network Services (CWINS) Center. Upon request from BellSouth at the time of the trouble report, Level 3 will be required to provide the results of the Level 3 test which indicate a problem on the BellSouth provided Loop.

2.1.6.2 Once Level 3 has isolated a trouble to the BellSouth provided Loop, and had issued a trouble report to BellSouth on the Loop, BellSouth will take the actions necessary to repair the Loop if a trouble actually exists. BellSouth will repair these Loops in the same time frames that BellSouth repairs similarly situated Loops to its End Users.

2.1.6.3 If Level 3 reports a trouble on a non-designed or designed Loop and no trouble actually exists, BellSouth will charge Level 3 for any dispatching and testing (both inside and outside the CO) required by BellSouth in order to confirm the Loop's working status.

2.1.6.4 In the event BellSouth must dispatch to the end-user's location more than once due to incorrect or incomplete information provided by Level 3 (e.g., incomplete address, incorrect contact name/number, etc.), BellSouth will bill Level 3 for each additional dispatch required to repair the circuit due to the incorrect/incomplete information provided. BellSouth will assess the applicable Trouble Determination rates from BellSouth's FCC or state tariffs.

2.1.7 **Order Coordination and Order Coordination-Time Specific**

2.1.7.1 "Order Coordination" (OC) allows BellSouth and Level 3 to coordinate the installation of the SL2 Loops, Unbundled Digital Loops (UDL) and other Loops where OC may be purchased as an option, to Level 3's facilities to limit End User service outage. OC is available when the Loop is provisioned over an existing circuit that is currently providing service to the End User. OC for physical conversions will be scheduled at BellSouth's discretion during normal working hours on the committed due date. OC shall be provided in accordance with the chart set forth below.

2.1.7.2 "Order Coordination – Time Specific" (OC-TS) allows Level 3 to order a specific time for OC to take place. BellSouth will make every effort to accommodate Level 3's specific conversion time request. However, BellSouth reserves the right to negotiate with Level 3 a conversion time based on load and appointment control when necessary. This OC-TS is a chargeable option for all Loops except Unbundled Copper Loops (UCL) and is billed in addition to the OC charge. Level 3 may specify a time between 9:00 a.m. and 4:00 p.m. (location time) Monday through Friday (excluding holidays). If Level 3 specifies a time outside this window, or selects a time or quantity of Loops that requires BellSouth technicians to work outside normal work hours, overtime charges will apply in addition to the OC and OC-TS charges. Overtime charges will be applied based on the amount of overtime worked and in accordance with the rates established in the Access

Services Tariff, Section E13.2, for each state. The OC-TS charges for an order due on the same day at the same location will be applied on a per Local Service Request (LSR) basis.

2.1.8 **CLEC to CLEC Conversions for Unbundled Loops**

2.1.8.1 The CLEC to CLEC conversion process for unbundled Loops may be used by Level 3 when converting an existing unbundled Loop from another CLEC for the same End User. The Loop type being converted must be included in Level 3's Interconnection Agreement before requesting a conversion.

2.1.8.2 To utilize the CLEC to CLEC conversion process, the Loop being converted must be the same Loop type with no requested changes to the Loop, must serve the same End User location from the same serving wire center, and must not require an outside dispatch to provision.

2.1.8.3 The Loops converted to Level 3 pursuant to the CLEC to CLEC conversion process shall be provisioned in the same manner and with the same functionality and options as described in this Attachment for the specific Loop type.

2.1.8.4

| | Order Coordination (OC) | Order Coordination – Time Specific (OC-TS) | DLR | Charge for Dispatch and Testing if No Trouble Found |
|---|---|---|---|---|
| **SL-1**<br><br>**(Non-Designed)** | Chargeable Option | Chargeable Option | Chargeable Option – ordered as Engineering Information Document | Charged for Dispatch inside and outside Central Office |
| **UCL-ND**<br><br>**(Non-Designed)** | Chargeable Option | Not Available | Chargeable Option – ordered as Engineering Information Document | Charged for Dispatch inside and outside Central Office |
| **Unbundled Voice Loops - SL-2 (including 2- and 4-wire UVL) (Designed)** | Included | Chargeable Option | Included | Charged for Dispatch outside Central Office |
| **Unbundled Digital Loop (Designed)** | Included | Chargeable Option (except on Universal Digital Channel) | Included | Charged for Dispatch outside Central Office |
| **Unbundled Copper Loop (Designed)** | Chargeable in accordance with Section 2 | Not available | Included | Charged for Dispatch outside Central Office |

2.1.9 **Bulk Migration**

2.1.9.1 If Level 3 requests to migrate twenty-five (25) or more UNE-Port/Loop Combination (UNE-P) customers to UNE-Loop (UNE-L) in the same Central Office on the same due date, Level 3 must use the Bulk Migration process, which is described in the BellSouth CLEC Information Package, "UNE-Port/Loop Combination (UNE-P) to UNE-Loop (UNE-L) Bulk Migration." This CLEC Information package, incorporated herein by reference as it may be amended from time to time, is located at www.interconnection.bellsouth.com/guides/html/unes.html. The rates for the Bulk Migration process shall be the nonrecurring rates associated with the Loop type being requested on the Bulk Migration, as set forth in Exhibit A of this Attachment. Additionally, OSS charges will also apply per LSR generated per

customer account as provided for in the Bulk Migration Request. The migration of loops from Integrated Digital Loop Carrier (IDLC) will be done pursuant to Section 2.6 of this Attachment.

2.1.10 **Ordering Guidelines and Processes**

2.1.10.1 For information regarding Ordering Guidelines and Processes for various UNEs, Level 3 should refer to the "Guides" section of the BellSouth Interconnection website, which is incorporated herein by reference, as amended from time to time. The website address is: http://www.interconnection.bellsouth.com/

2.1.10.2 Additional information may also be found in the individual CLEC Information Packages, as amended from time to time and which are incorporated herein by reference, located at the "CLEC UNE Products" website at the following address: http://www.interconnection.bellsouth.com/guides/html/unes.html

2.2 **Unbundled Voice Loops (UVLs)**

2.2.1 BellSouth shall make available the following UVLs:

2.2.1.1 2-wire Analog Voice Grade Loop – SL1 (Non-Designed)

2.2.1.2 2-wire Analog Voice Grade Loop – SL2 (Designed)

2.2.1.3 4-wire Analog Voice Grade Loop (Designed)

2.2.2 Unbundled Voice Loops (UVL) may be provisioned using any type of facility that will support voice grade services. This may include loaded copper, non-loaded copper, digital loop carrier systems, fiber/copper combination (hybrid loop) or a combination of any of these facilities. BellSouth, in the normal course of maintaining, repairing, and configuring its network, may also change the facilities that are used to provide any given voice grade circuit. This change may occur at any time. In these situations, BellSouth will only ensure that the newly provided facility will support voice grade services. BellSouth will not guarantee that Level 3 will be able to continue to provide any advanced services over the new facility. BellSouth will offer UVL in two different service levels - Service Level One (SL1) and Service Level Two (SL2).

2.2.3 Unbundled Voice Loop - SL1 (UVL-SL1) Loops are 2-wire Loop start circuits, will be non-designed, and will not have remote access test points. OC will be offered as a chargeable option on SL1 Loops when reuse of existing facilities has been requested by Level 3. Level 3 may also order OC-TS when a specified conversion time is requested. OC-TS is a chargeable option for any coordinated order and is billed in addition to the OC charge. An Engineering Information (EI) document can be ordered as a chargeable option. The EI document provides Loop Make-Up information which is similar to the information normally provided in a Design Layout Record (DLR). Upon issuance of a non-coordinated order in the service order system, SL1 Loops will be activated on the due date in the same

manner and time frames that BellSouth normally activates POTS-type Loops for its End Users.

2.2.4 For an additional charge BellSouth will make available Loop Testing so that Level 3 may request further testing on new UVL-SL1 Loops. Rates for Loop Testing are as set forth in Exhibit A of this Attachment.

2.2.5 Unbundled Voice Loop – SL2 (UVL-SL2) Loops may be 2-wire or 4-wire circuits, shall have remote access test points, and will be designed with a DLR provided to Level 3. SL2 circuits can be provisioned with loop start, ground start or reverse battery signaling. OC is provided as a standard feature on SL2 Loops. The OC feature will allow Level 3 to coordinate the installation of the Loop with the disconnect of an existing customer's service and/or number portability service. In these cases, BellSouth will perform the order conversion with standard order coordination at its discretion during normal work hours.

2.3 **Unbundled Digital Loops**

2.3.1 BellSouth will offer Unbundled Digital Loops (UDL). UDLs are service specific, will be designed, will be provisioned with test points (where appropriate), and will come standard with OC and a DLR. The various UDLs are intended to support a specific digital transmission scheme or service.

2.3.2 BellSouth shall make available the following UDLs, subject to restrictions set forth herein:

2.3.2.1 2-wire Unbundled ISDN Digital Loop

2.3.2.2 2-wire Unbundled ADSL Compatible Loop

2.3.2.3 2-wire Unbundled HDSL Compatible Loop

2.3.2.4 4-wire Unbundled HDSL Compatible Loop

2.3.2.5 4-wire Unbundled DS1 Digital Loop

2.3.2.6 4-wire Unbundled Digital Loop/DS0 – 64 kbps, 56 kbps and below

2.3.2.7 DS3 Loop

2.3.2.8 STS-1 Loop

2.3.3 2-Wire Unbundled ISDN Digital Loops will be provisioned according to industry standards for 2-Wire Basic Rate ISDN services and will come standard with a test point, OC, and a DLR. Level 3 will be responsible for providing BellSouth with a Service Profile Identifier (SPID) associated with a particular ISDN-capable Loop and End User. With the SPID, BellSouth will be able to adequately test the circuit and ensure that it properly supports ISDN service.

2.3.3.1 Upon the Effective Date of this Agreement, Universal Digital Channel (UDC) elements will no longer be offered by BellSouth and no new orders for UDC will be accepted. Any existing UDCs that were provisioned prior to the Effective Date of this Agreement will be grandfathered at the rates set forth in the Parties' interconnection agreement that was in effect immediately prior to the Effective Date of this Agreement. Existing UDCs that were provisioned prior to the Effective Date of this Agreement may remain connected, maintained and repaired according to BellSouth's TR73600 until such time as they are disconnected by Level 3 or BellSouth provides ninety (90) calendar days notice that such UDC must be terminated. Level 3 may order an ISDN loop, if available, to provide the same functionality as the previously offered UDC product.

2.3.4 2-Wire ADSL-Compatible Loop. This is a designed Loop that is provisioned according to Revised Resistance Design (RRD) criteria and may be up to 18,000 feet long and may have up to 6,000 feet of bridged tap (inclusive of Loop length). The Loop is a 2-wire circuit and will come standard with a test point, OC, and a DLR.

2.3.5 2-Wire or 4-Wire HDSL-Compatible Loop. This is a designed Loop that meets Carrier Serving Area (CSA) specifications, may be up to 12,000 feet long and may have up to 2,500 feet of bridged tap (inclusive of Loop length). It may be a 2-wire or 4-wire circuit and will come standard with a test point, OC, and a DLR.

2.3.6 4-Wire Unbundled DS1 Digital Loop. This is a designed 4-wire Loop that is provisioned according to industry standards for DS1 or Primary Rate ISDN services and will come standard with a test point, OC, and a DLR. A DS1 Loop may be provisioned over a variety of loop transmission technologies including copper, HDSL-based technology or fiber optic transport systems. It will include a 4-Wire DS1 Network Interface at the End User's location.

2.3.7 4-Wire Unbundled Digital/DS0 Loop. These are designed 4-wire Loops that may be configured as 64kbps, 56kbps, 19kbps, and other sub-rate speeds associated with digital data services and will come standard with a test point, OC, and a DLR.

2.3.8 DS3 Loop. DS3 Loop is a two-point digital transmission path which provides for simultaneous two-way transmission of serial, bipolar, return-to-zero isochronous digital electrical signals at a transmission rate of 44.736 megabits per second (Mbps) that is dedicated to the use of the ordering CLEC in its provisioning of local exchange and associated exchange access services. It may provide transport for twenty-eight (28) DS1 channels, each of which provides the digital equivalent of twenty-four (24) analog voice grade channels.

The interface to unbundled dedicated DS3 transport is a metallic-based electrical interface.

2.3.9 STS-1 Loop. STS-1 Loop is a high-capacity digital transmission path with SONET VT1.5 mapping that is dedicated for the use of the ordering customer for

the purpose of provisioning local exchange and associated exchange access services. It is a two-point digital transmission path which provides for simultaneous two-way transmission of serial bipolar return-to-zero synchronous digital electrical signals at a transmission rate of 51.84 megabits per second (Mbps). It may provide transport for twenty-eight (28) DS1 channels, each of which provides the digital equivalent of twenty-four (24) analog voice grade channels. The interface to unbundled dedicated STS-1 transport is a metallic-based electrical interface.

2.3.10 Both DS3 Loop and STS-1 Loop require a Service Inquiry (SI) in order to ascertain availability.

2.3.11 If DS3/STS-1 Loops are not readily available but can be made available through routine network modifications, as defined in Section 1.8.2 of this Attachment. Level 3 may request BellSouth to perform such routine network modifications. The request may not be used to place fiber.

2.3.12 DS3 services come with a test point and a DLR. Mileage is airline miles, rounded up and a minimum of one mile applies. BellSouth TR 73501 LightGate® Service Interface and Performance Specifications, Issue D, June 1995 applies to DS3 services.

2.3.13 Level 3 may access a total capacity of two (2) DS3s per any single End User location at the Network Element rates set forth in Exhibit A.

2.4 **Unbundled Copper Loops (UCL)**

2.4.1 BellSouth shall make available Unbundled Copper Loops (UCLs). The UCL is a copper twisted pair Loop that is unencumbered by any intervening equipment (e.g., filters, load coils, range extenders, digital loop carrier, or repeaters) and is not intended to support any particular telecommunications service. The UCL will be offered in two types – Designed and Non-Designed.

2.4.2 **Unbundled Copper Loop – Designed (UCL-D)**

2.4.2.1 The UCL-D will be provisioned as a dry copper twisted pair (2- or 4-wire) Loop that is unencumbered by any intervening equipment (e.g., filters, load coils, range extenders, digital loop carrier, or repeaters).

2.4.2.2 A UCL-D will be 18,000 feet or less in length and is provisioned according to Resistance Design parameters, may have up to 6,000 feet of bridged tap and will have up to 1300 Ohms of resistance.

2.4.2.3 The UCL-D is a designed circuit, is provisioned with a test point, and comes standard with a DLR. OC is a chargeable option for a UCL-D; however, OC is always required on UCLs where a reuse of existing facilities has been requested by Level 3.

2.4.2.4 These Loops are not intended to support any particular services and may be utilized by Level 3 to provide a wide-range of telecommunications services as long as those services do not significantly degrade BellSouth's network. This facility will include a Network Interface Device (NID) at the customer's location for the purpose of connecting the Loop to the customer's inside wire.

2.4.2.5 Upon the Effective Date of this Agreement, Unbundled Copper Loop – Long (UCL-L) elements will no longer be offered by BellSouth and no new orders for UCL-L will be accepted. Any existing UCL-Ls that were provisioned prior to the Effective Date of this Agreement will be grandfathered at the rates set forth in the Parties' interconnection agreement that was in effect immediately prior to the Effective Date of this Agreement. Existing UCL-Ls that were provisioned prior to the Effective Date of this Agreement may remain connected, maintained and repaired according to BellSouth's TR73600 and may remain connected until such time as they are disconnected by Level 3 or BellSouth provides ninety (90) calendar days notice that such UCL-L must be terminated.

2.4.3 **Unbundled Copper Loop – Non-Designed (UCL-ND)**

2.4.3.1 The UCL–ND is provisioned as a dedicated 2-wire metallic transmission facility from BellSouth's Main Distribution Frame (MDF) to a customer's premises (including the NID). The UCL-ND will be a "dry copper" facility in that it will not have any intervening equipment such as load coils, repeaters, or digital access main lines (DAMLs), and may have up to 6,000 feet of bridged tap between the End User's premises and the serving wire center. The UCL-ND typically will be 1300 Ohms resistance and in most cases will not exceed 18,000 feet in length, although the UCL-ND will not have a specific length limitation. For Loops less than 18,000 feet and with less than 1300 Ohms resistance, the Loop will provide a voice grade transmission channel suitable for Loop start signaling and the transport of analog voice grade signals. The UCL-ND will not be designed and will not be provisioned with either a DLR or a test point.

2.4.3.2 The UCL-ND facilities may be mechanically assigned using BellSouth's assignment systems. Therefore, the Loop Makeup (LMU) process is not required to order and provision the UCL-ND. However, Level 3 can request LMU for which additional charges would apply.

2.4.3.3 For an additional charge, BellSouth also will make available Loop Testing so that Level 3 may request further testing on the UCL-ND. Rates for Loop Testing are as set forth in Exhibit A of this Attachment.

2.4.3.4 UCL-ND Loops are not intended to support any particular service and may be utilized by Level 3 to provide a wide-range of telecommunications services as long as those services do not adversely affect BellSouth's network. The UCL-ND will include a NID at the customer's location for the purpose of connecting the Loop to the customer's inside wire.

2.4.3.5 OC will be provided as a chargeable option and may be utilized when the UCL-ND provisioning is associated with the reuse of BellSouth facilities. OC-TS does not apply to this product.

2.4.3.6 Level 3 may use BellSouth's Unbundled Loop Modification (ULM) offering to remove excessive bridged taps and/or load coils from any copper Loop within the BellSouth network. Therefore, some Loops that would not qualify as UCL-ND could be transformed into Loops that do qualify, using the ULM process.

2.5 **Unbundled Loop Modifications (Line Conditioning)**

2.5.1 Line Conditioning is defined as routine network modification that BellSouth regularly undertakes to provide xDSL services to its own customers. This may include the removal of any device, from a copper Loop or copper Sub-loop that may diminish the capability of the Loop or Sub-loop to deliver high-speed switched wireline telecommunications capability, including xDSL service. Such devices include, but are not limited to, load coils, excessive bridged taps, low pass filters, and range extenders. Excessive bridged taps are bridged taps that serves no network design purpose and that are beyond the limits set according to industry standards and/or the BellSouth TR 73600.

2.5.2 BellSouth will remove load coils only on copper loops and sub-loops.

2.5.3 For any copper loop being ordered by Level 3 which has over 6,000 feet of combined bridged tap will be modified, upon request from Level 3, so that the loop will have a maximum of 6,000 feet of bridged tap. This modification will be performed at no additional charge to Level 3. Loop conditioning orders that require the removal of bridged tap that serves no network design purpose on a copper loop that will result in a combined total of bridged tap between 2,500 and 6,000 feet will be performed at the rates set forth in Exhibit A of this Attachment.

2.5.4 Level 3 may request removal of any unnecessary and non-excessive bridged tap (bridged tap between 0 and 2,500 feet which serves no network design purpose) pursuant to BellSouth's Special Construction Process as mutually agreed to by the Parties

2.5.5 Rates for ULM are as set forth in Exhibit A of this Attachment.

2.5.6 BellSouth will not modify a Loop in such a way that it no longer meets the technical parameters of the original Loop type (e.g., voice grade, ADSL, etc.) being ordered.

2.5.7 If Level 3 requests ULM on a reserved facility for a new loop order, BellSouth may perform a pair change and provision a different loop facility in lieu of the reserved facility with ULM if feasible. The loop provisioned will meet or exceed specifications of the requested loop facility as modified. Level 3 will not be charged for ULM if a different loop is provisioned. For loops that require a DLR or its equivalent, BellSouth will provide LMU detail of the loop provisioned.

2.5.8 Level 3 shall request Loop make up information pursuant to this Attachment prior to submitting a service inquiry and/or a LSR for the Loop type that Level 3 desires BellSouth to condition.

2.5.9 When requesting ULM for a Loop that BellSouth has previously provisioned for Level 3, Level 3 will submit a service inquiry to BellSouth. If a spare Loop facility that meets the loop modification specifications requested by Level 3 is available at the location for which the ULM was requested, Level 3 will have the option to change the Loop facility to the qualifying spare facility rather than to provide ULM. In the event that BellSouth changes the Loop facility in lieu of providing ULM, Level 3 will not be charged for ULM but will only be charged the service order charges for submitting an order.

2.6 **Loop Provisioning Involving Integrated Digital Loop Carriers**

2.6.1 Where Level 3 has requested an Unbundled Loop and BellSouth uses IDLC systems to provide the local service to the End User and BellSouth has a suitable alternate facility available, BellSouth will make such alternative facilities available to Level 3. If a suitable alternative facility is not available, then to the extent it is technically feasible, BellSouth will implement one of the following alternative arrangements for Level 3 (e.g. hairpinning):

1. Roll the circuit(s) from the IDLC to any spare copper that exists to the customer premises.
2. Roll the circuit(s) from the IDLC to an existing DLC that is not integrated.
3. If capacity exists, provide "side-door" porting through the switch.
4. If capacity exists, provide "Digital Access Cross Connect System (DACS)-door" porting (if the IDLC routes through a DACS prior to integration into the switch).

2.6.2 Arrangements 3 and 4 above require the use of a designed circuit. Therefore, non-designed Loops such as the SL1 voice grade and UCL-ND may not be ordered in these cases.

2.6.3 If no alternate facility is available, and upon request from Level 3, and if agreed to by both Parties, BellSouth may utilize its Special Construction (SC) process to determine the additional costs required to provision facilities. Level 3 will then have the option of paying the one-time SC rates to place the Loop.

2.7 **Network Interface Device**

2.7.1 The NID is defined as any means of interconnection of the End User's customer premises wiring to BellSouth's distribution plant, such as a cross connect device used for that purpose. The NID is a single-line termination device or that portion of a multiple line termination device required to terminate a single line or circuit at the premises. The NID features two independent chambers or divisions that separate the service provider's network from the End User's customer premises wiring. Each chamber or division contains the appropriate connection points or

posts to which the service provider and the End User each make their connections. The NID provides a protective ground connection and is capable of terminating cables such as twisted pair cable.

2.7.2 BellSouth shall permit Level 3 to connect Level 3's Loop facilities to the End User's customer premises wiring through the BellSouth NID or at any other technically feasible point.

2.7.3 **Access to NID**

2.7.3.1 Level 3 may access the End User's customer premises wiring by any of the following means and Level 3 shall not disturb the existing form of electrical protection and shall maintain the physical integrity of the NID:

2.7.3.1.1 BellSouth shall allow Level 3 to connect its Loops directly to BellSouth's multi-line residential NID enclosures that have additional space and are not used by BellSouth or any other telecommunications carriers to provide service to the premises.

2.7.3.1.2 Where an adequate length of the End User's customer premises wiring is present and environmental conditions permit, either Party may remove the customer premises wiring from the other Party's NID and connect such wiring to that Party's own NID;

2.7.3.1.3 Either Party may enter the subscriber access chamber or dual chamber NID enclosures for the purpose of extending a connect divisioned or spliced jumper wire from the customer premises wiring through a suitable "punch-out" hole of such NID enclosures; or

2.7.3.1.4 Level 3 may request BellSouth to make other rearrangements to the End User customer premises wiring terminations or terminal enclosure on a time and materials cost basis.

2.7.3.2 In no case shall either Party remove or disconnect the other Party's Loop facilities from either Party's NIDs, enclosures, or protectors unless the applicable Commission has expressly permitted the same and the disconnecting Party provides prior notice to the other Party. In such cases, it shall be the responsibility of the Party disconnecting Loop facilities to leave undisturbed the existing form of electrical protection and to maintain the physical integrity of the NID. It will be Level 3's responsibility to ensure there is no safety hazard, and Level 3 will hold BellSouth harmless for any liability associated with the removal of the BellSouth Loop from the BellSouth NID. Furthermore, it shall be the responsibility of the disconnecting Party, once the other Party's Loop has been disconnected from the NID, to reconnect the disconnected Loop to a nationally recognized testing laboratory listed station protector, which has been grounded as per Article 800 of the National Electrical Code. If no spare station protector exists in the NID, the disconnected Loop must be appropriately cleared, capped and stored.

2.7.3.3 Level 3 shall not remove or disconnect ground wires from BellSouth's NIDs, enclosures, or protectors.

2.7.3.4 Level 3 shall not remove or disconnect NID modules, protectors, or terminals from BellSouth's NID enclosures.

2.7.3.5 Due to the wide variety of NID enclosures and outside plant environments, BellSouth will work with Level 3 to develop specific procedures to establish the most effective means of implementing this section if the procedures set forth herein do not apply to the NID in question.

2.7.4 Technical Requirements

2.7.4.1 The NID shall provide an accessible point of interconnection and shall maintain a connection to ground.

2.7.4.2 If an existing NID is accessed, it shall be capable of transferring electrical analog or digital signals between the End User's customer premises and the distribution media and/or cross connect to Level 3's NID.

2.7.4.3 Existing BellSouth NIDs will be provided in "as is" condition. Level 3 may request BellSouth to do additional work to the NID on a time and material basis. When Level 3 deploys its own local Loops in a multiple-line termination device, Level 3 shall specify the quantity of NID connections that it requires within such device.

2.8 **Sub-loop Elements**

2.8.1 Where existing capacity is available, BellSouth shall offer access to its Unbundled Sub-Loop (USL) elements as specified herein.

2.8.2 Unbundled Sub-Loop Distribution (USL)

2.8.2.1 The Unbundled Sub-Loop Distribution facility is a dedicated transmission facility that BellSouth provides from an End User's point of demarcation to a BellSouth technically feasible accessible terminal, as defined in CFR 51.319. The BellSouth technically feasible accessible terminal may be located within a remote terminal (RT) or a stand-alone technically feasible accessible terminal in the field or in the equipment room of a building. The unbundled sub-loop distribution media is a copper twisted pair that can be provisioned as a 2-Wire or 4-Wire facility. Unbundled subloops shall be available to Level 3 irrespective of the capacity level or type of loop such carrier will provide to its customer at that premises. Bell South shall provide access to unbundled subloops without requiring collocation. BellSouth will make available the following sub-loop distribution offerings where facilities exist:

Unbundled Sub-Loop Distribution – Voice Grade

Unbundled Copper Sub-Loop
Unbundled Sub-Loop Distribution – Intrabuilding Network Cable (aka riser cable)

2.8.2.2 Unbundled Sub-Loop Distribution – Voice Grade (USLD-VG) is a copper sub-loop facility from the cross-box in the field up to and including the point of demarcation at the End User's premises and may have load coils.

2.8.2.3 Unbundled Copper Sub-Loop (UCSL) is a copper facility of any length provided from the cross-box in the field up to and including the End User's point of demarcation. If available, this facility will not have any intervening equipment such as load coils between the End User and the cross-box.

2.8.2.3.1 If Level 3 requests a UCSL and it is not available, Level 3 may request the copper Sub-Loop facility be modified pursuant to the ULM process to remove load coils and/or excessive bridged taps. If load coils and/or excessive bridged taps are removed, the facility will be classified as a UCSL.

2.8.2.4 Unbundled Sub-Loop Distribution – Intrabuilding Network Cable (USLD-INC) is the distribution facility owned or controlled by BellSouth inside a building or between buildings on the same property that is not separated by a public street or road. USLD-INC includes the facility from the cross connect device in the building equipment room up to and including the point of demarcation at the End User's premises. USLD-INC shall be available to Level 3 irrespective of the capacity level or type of loop such carrier will provide to its customer at that premises. Bell South shall provide access to USLD-INC without requiring collocation.

2.8.2.4.1 Upon request for USLD-INC from Level 3, BellSouth will install a cross connect panel in the building equipment room for the purpose of accessing USLD-INC pairs from a building equipment room. The cross-connect panel will function as a single point of interconnection (SPOI) for USLD-INC and will be accessible by multiple carriers as space permits. BellSouth will place cross-connect blocks in 25-pair increments for Level 3's use on this cross-connect panel. Level 3 will be responsible for connecting its facilities to the 25-pair cross-connect block(s).

2.8.2.5 For access to Voice Grade USLD and UCSL, Level 3 shall install a cable to the BellSouth cross-box pursuant to the terms and conditions for physical collocation for remote sites set forth in this Agreement. This cable would be connected by a BellSouth technician within the BellSouth cross-box during the set-up process. Level 3's cable pairs can then be connected to BellSouth's USL within the BellSouth cross-box by the BellSouth technician.

2.8.2.6 Through the SI process, BellSouth will determine whether access to Unbundled Sub-Loops at the location requested by Level 3 is technically feasible and whether sufficient capacity exists in the cross-box. If existing capacity is sufficient to meet Level 3's request, then BellSouth will perform the site set-up as described in the

CLEC Information Package, located at the website address: http://www.interconnection.bellsouth.com/products/html/unes.html.

2.8.2.7 The site set-up must be completed before Level 3 can order sub-loop pairs. For the site set-up in a BellSouth cross-connect box in the field, BellSouth will perform the necessary work to splice Level 3's cable into the cross-connect box. For the site set-up inside a building equipment room, BellSouth will perform the necessary work to install the cross-connect panel and the connecting block(s) that will be used to provide access to the requested USLs.

2.8.2.8 Once the site set-up is complete, Level 3 will request sub-loop pairs through submission of a LSR form to the Local Carrier Service Center (LCSC). OC is required with USL pair provisioning when Level 3 requests reuse of an existing facility, and the Order Coordination charge shall be billed in addition to the USL pair rate. For expedite requests by Level 3 for sub-loop pairs, expedite charges will apply for intervals less than five (5) calendar days.

2.8.2.9 Unbundled Sub-Loops will be provided in accordance with technical reference TR73600.

2.8.3 Unbundled Network Terminating Wire (UNTW)

2.8.3.1 UNTW is unshielded twisted copper wiring that is used to extend circuits from an intra-building network cable terminal or from a building entrance terminal to an individual End User's point of demarcation. It is the final portion of the Loop that in multi-subscriber configurations represents the point at which the network branches out to serve individual subscribers.

2.8.3.2 This element will be provided in Multi-Dwelling Units (MDUs) and/or Multi-Tenants Units (MTUs) where either Party owns wiring all the way to the End User's premises. Neither Party will provide this element in locations where the property owner provides its own wiring to the End User's premises, where a third party owns the wiring to the End User's premises. UNTW shall be available to Level 3 irrespective of the capacity level or type of loop such carrier will provide to its customer at that premises. Bell South shall provide access to UNTW without requiring collocation.

2.8.3.3 Requirements

2.8.3.3.1 On a multi-unit premises, upon request of the other Party (Requesting Party), the Party owning the network terminating wire (Provisioning Party) will provide access to UNTW pairs on an Access Terminal that is suitable for use by multiple carriers at each Garden Terminal or Wiring Closet.

2.8.3.3.2 The Provisioning Party shall not be required to install new or additional NTW beyond existing NTW to provision the services of the Requesting Party.

2.8.3.3.3 In existing MDUs and/or MTUs where Level 3 owns or controls NTW in which BellSouth does not own or control wiring (INC/NTW) to the End Users premises, Level 3 will install UNTW Access Terminals for BellSouth in accordance with State rules.

2.8.3.3.4 In situations in which BellSouth activates a UNTW pair, BellSouth will compensate Level 3 for each pair activated commensurate to the price specified in Level 3's Agreement.

2.8.3.3.5 Upon receipt of the UNTW SI requesting access to the Provisioning Party's UNTW pairs at a multi-unit premises, representatives of both Parties will participate in a meeting at the site of the requested access. The purpose of the site visit will include discussion of the procedures for installation and location of the Access Terminals. By request of the Requesting Party, an Access Terminal will be installed either adjacent to each of the Provisioning Party's Garden Terminal or inside each Wiring Closet. The Requesting Party will deliver and connect its central office facilities to the UNTW pairs within the Access Terminal. The Requesting Party may access any available pair on an Access Terminal. A pair is available when a pair is not being utilized to provide service or where the End User has requested a change in its local service provider to the Requesting Party. Prior to connecting the Requesting Party's service on a pair previously used by the Provisioning Party, the Requesting Party is responsible for ensuring the End User is no longer using the Provisioning Party's service or another CLEC's service before accessing UNTW pairs.

2.8.3.3.6 Access Terminal installation intervals will be established on an individual case basis.

2.8.3.3.7 The Requesting Party is responsible for obtaining the property owner's permission for the Provisioning Party to install an Access Terminal(s) on behalf of the Requesting Party. The submission of the SI by the Requesting Party will serve as certification by the Requesting Party that such permission has been obtained. If the property owner objects to Access Terminal installations that are in progress or subsequent to completion and demands removal of Access Terminals, the Requesting Party will be responsible for costs associated with removing Access Terminals and restoring the property to its original state prior to Access Terminals being installed.

2.8.3.3.8 The Requesting Party shall indemnify and hold harmless the Provisioning Party against any claims of any kind that may arise out of the Requesting Party's failure to obtain the property owner's permission. The Requesting Party will be billed for nonrecurring and recurring charges for accessing UNTW pairs at the time the Requesting Party activates the pair(s). The Requesting Party will notify the Provisioning Party within five (5) business days of activating UNTW pairs using the LSR form.

2.8.3.3.9 If a trouble exists on a UNTW pair, the Requesting Party may use an alternate spare pair that serves that End User if a spare pair is available. In such cases, the Requesting Party will re-terminate its existing jumper from the defective pair to the spare pair. Alternatively, the Requesting Party will isolate and report troubles in the manner specified by the Provisioning Party. The Requesting Party must tag the UNTW pair that requires repair. If the Provisioning Party dispatches a technician on a reported trouble call and no UNTW trouble is found, the Provisioning Party will charge Requesting Party for time spent on the dispatch and testing the UNTW pair(s).

2.8.3.3.10 If the Requesting Party initiates the Access Terminal installation and the Requesting Party has not activated at least ten (10) percent of the capacity of the Access Terminal installed pursuant to the Requesting Party's request for an Access Terminal within six (6) months of installation of the Access Terminal, the Provisioning Party will bill the Requesting Party a nonrecurring charge equal to the actual cost of provisioning the Access Terminal.

2.8.3.3.11 If the Provisioning Party determines that the Requesting Party is using the UNTW pairs without reporting the activation of the pairs, the Requesting Party will be billed for the use of that pair back to the date the End User began receiving service from the Requesting Party at that location. Upon request, the Requesting Party will provide copies of its billing record to substantiate such date. If the Requesting Party fails to provide such records, then the Provisioning Party will bill the Requesting Party back to the date of the Access Terminal installation.

2.8.4 **Unbundled Sub-Loop Feeder**

2.8.4.1 Upon the Effective Date of this Agreement, Unbundled Sub-Loop Feeder (USLF) elements will no longer be offered by BellSouth at TELRIC prices. Within ninety (90) calendar days of the Effective Date of this Agreement, Level 3 will either negotiate market-based rates for these elements or will issue orders to have these elements disconnected. If, after this ninety (90)-day period, market-based rates have not been negotiated and Level 3 has not issued the appropriate disconnect orders, BellSouth may immediately disconnect any remaining USLF elements and will bill Level 3 any applicable disconnect charges.

2.8.5 **Unbundled Loop Concentration**

2.8.5.1 Upon the Effective Date of this Agreement, the Unbundled Loop Concentration (ULC) element will no longer be offered by BellSouth and no new orders for ULC will be accepted. Any existing ULCs that were provisioned prior to the Effective Date of this Agreement will be grandfathered at the rates set forth in the Parties' interconnection agreement that was in effect immediately prior to this Agreement and may remain connected, maintained and repaired according to BellSouth's TR73600 until such time as they are disconnected by Level 3, or BellSouth provides ninety (90) calendar days notice that such ULC must be terminated.

2.8.6 **Dark Fiber Loop**

2.8.6.1 Dark Fiber Loop is an unused optical transmission facility, without attached signal regeneration, multiplexing, aggregation or other electronics, from the demarcation point at an End User's premises to the End User's serving wire center. Dark Fiber Loops may be strands of optical fiber existing in aerial or underground structure. BellSouth will not provide line terminating elements, regeneration or other electronics necessary for Level 3 to utilize Dark Fiber Loops.

2.8.6.2 If Dark Fiber Loop is not readily available but can be made available through routine network modifications, as defined in Section 1.8.2 of this Attachment. Level 3 may request BellSouth to perform such routine network modifications. The request may not be used to place fiber.

2.8.6.3 Requirements

2.8.6.3.1 BellSouth shall make available Dark Fiber Loop where it exists in BellSouth's network and where, as a result of future building or deployment, it becomes available. Dark Fiber Loop will not be deemed available if: (1) it is used by BellSouth for maintenance and repair purposes, (2) it is designated for use pursuant to a firm order placed by another customer; (3) it is restricted for use by all carriers, including BellSouth, because of transmission problems or because it is scheduled for removal due to documented changes to roads and infrastructure; or (4) BellSouth has funded, documented plans to use the fiber within a two-year planning period. BellSouth is not required to place the fiber for Dark Fiber Loop if none is available.

2.8.6.3.2 Level 3 is solely responsible for testing the quality of the Dark Fiber to determine its usability and performance specifications.

2.8.6.3.3 BellSouth shall use its commercially reasonable efforts to provide to Level 3 information regarding the location, availability and performance of Dark Fiber Loop within ten (10) business days after receiving a SI from Level 3.

2.8.6.3.4 If Bell South determines that Dark Fiber Loop is not available over a particular route, in its response, and upon receipt of acceptable non-disclosure agreement from Level 3, Bell South will provide information regarding: (i) the number of dark fiber strands reserved for maintenance purposes, (ii) the number of fiber strands reserved for Bell South's firm customer orders, (iii) the number of fiber strands otherwise not available for one of the reasons provided in section 6.4.3.1 above, and (iv) the total number of strands on the requested route. In this response, Bell South shall also inform Level 3 if a routine network modification could be implemented to make dark fiber available along the requested route. In its response, Bell South will inform Level 3 if fewer than the requested number of dark fiber strands are available on the requested route. Nothing herein shall be construed to limit Level 3's ability to challenge, at the Commission, BellSouth's determination that dark fiber is unavailable.

2.8.6.3.5 If the requested Dark Fiber Loop is available, BellSouth shall use commercially reasonable efforts to provision the Dark Fiber Loop to Level 3 within twenty (20) business days after Level 3 submits a valid, error free LSR. Provisioning includes identification of appropriate connection points (e.g., Light Guide Interconnection (LGX)) to enable Level 3 to connect Level 3 provided transmission media (e.g., optical fiber) or equipment to the Dark Fiber Loop.

2.9 **Loop Makeup**

2.9.1 Description of Service

2.9.1.1 BellSouth shall make available to Level 3 LMU information so that Level 3 can make an independent judgment about whether the Loop is capable of supporting the advanced services equipment Level 3 intends to install and the services Level 3 wishes to provide. This section addresses LMU as a preordering transaction, distinct from Level 3 ordering any other service(s). Loop Makeup Service Inquiries (LMUSI) and mechanized LMU queries for preordering LMU are likewise unique from other preordering functions with associated SIs as described in this Agreement.

2.9.1.2 BellSouth will provide Level 3 LMU information consisting of the composition of the Loop material (copper/fiber); the existence, location and type of equipment on the Loop, including but not limited to digital loop carrier or other remote concentration devices, feeder/distribution interfaces, bridged taps, load coils, pair-gain devices; the Loop length; the wire gauge and electrical parameters.

2.9.1.3 BellSouth's LMU information is provided to Level 3 as it exists either in BellSouth's databases or in its hard copy facility records. BellSouth does not guarantee accuracy or reliability of the LMU information provided.

2.9.1.4 BellSouth's provisioning of LMU information to the requesting CLEC for facilities is contingent upon either BellSouth or the requesting CLEC controlling the Loop(s) that serve the service location for which LMU information has been requested by the CLEC. The requesting CLEC is not authorized to receive LMU information on a facility used or controlled by another CLEC unless BellSouth receives a Letter of Authorization (LOA) from the voice CLEC (owner) or its authorized agent on the LMUSI submitted by the requesting CLEC.

2.9.1.5 Level 3 may choose to use equipment that it deems will enable it to provide a certain type and level of service over a particular BellSouth Loop as long as that advanced services equipment does not significantly degrade other services on the BellSouth network. The issue of significant degradation by advanced services equipment will be resolved in accordance with FCC rule 51.233. The determination shall be made solely by Level 3 and BellSouth shall not be liable in any way for the performance of the advanced data services provisioned over said Loop. The specific Loop type (ADSL, HDSL, or otherwise) ordered on the LSR must match the LMU of the Loop reserved taking into consideration any requisite

line conditioning. The LMU data is provided for informational purposes only and does not guarantee Level 3's ability to provide advanced data services over the ordered Loop type. Further, if Level 3 orders Loops that do not require a specific facility medium (i.e. copper only) or Loops that are not intended to support advanced services (such as UV-SL1, UV-SL2, or ISDN compatible Loops) and that are not inventoried as advanced services Loops, the LMU information for such Loops is subject to change at any time due to modifications and/or upgrades to BellSouth's network. Level 3 is fully responsible for any of its service configurations that may differ from BellSouth's technical standard for the Loop type ordered.

2.9.2 **Submitting Loop Makeup Service Inquiries**

2.9.2.1 Level 3 may obtain LMU information by submitting a mechanized LMU query or a Manual LMUSI. Mechanized LMUs should be submitted through BellSouth's OSS interfaces. After obtaining the Loop information from the mechanized LMU process, if Level 3 needs further Loop information in order to determine Loop service capability, Level 3 may initiate a separate Manual Service Inquiry for a separate nonrecurring charge as set forth in Exhibit A of this Attachment.

2.9.2.2 Manual LMUSIs shall be submitted according to the guidelines in the LMU CLEC Information Package, incorporated herein by reference, as it may be amended from time to time, which can be found at the following BellSouth website: http://interconnection.bellsouth.com/guides/html/unes.html . The service interval for the return of a Manual LMUSI is three (3) business days. Manual LMUSIs are not subject to expedite requests. This service interval is distinct from the interval applied to the subsequent service order.

2.9.3 **Loop Reservations**

2.9.3.1 For a Mechanized LMUSI, Level 3 may reserve up to ten (10) Loop facilities. For a Manual LMUSI, Level 3 may reserve up to three (3) Loop facilities.

2.9.3.2 Level 3 may reserve facilities for up to four (4) business days for each facility requested through LMU from the time the LMU information is returned to Level 3. During and prior to Level 3 placing an LSR, the reserved facilities are rendered unavailable to other customers, including BellSouth. If Level 3 does not submit an LSR for a UNE service on a reserved facility within the four (4)-day reservation timeframe, the reservation of that spare facility will become invalid and the facility will be released.

2.9.3.3 Charges for preordering Manual LMUSI or Mechanized LMU are separate from any charges associated with ordering other services from BellSouth.

2.9.3.4 All LSRs issued for reserved facilities shall reference the facility reservation number as provided by BellSouth. Level 3 will not be billed any additional LMU charges for the Loop ordered on such LSR. If, however, Level 3 does not reserve facilities upon an initial LMUSI, Level 3's placement of an order for an advanced

data service type facility will incur the appropriate billing charges to include SI and reservation per Exhibit A of this Attachment.

2.9.3.5 Where Level 3 has reserved multiple Loop facilities on a single reservation, Level 3 may not specify which facility shall be provisioned when submitting the LSR. For those occasions, BellSouth will assign to Level 3, subject to availability, a facility that meets the BellSouth technical standards of the BellSouth type Loop as ordered by Level 3.

**3 Line Sharing**

3.1 General

3.1.1 Line Sharing is defined as the process by which Level 3 provides digital subscriber line service over the same copper loop that BellSouth uses to provide voice service, with BellSouth using the low frequency portion of the loop and Level 3 using the high frequency spectrum (as defined below) of the loop.

3.1.2 Line Sharing arrangements in service as of October 1, 2003, will be grandfathered until the earlier of the date the End User discontinues or moves service with Level 3. Grandfathered arrangements pursuant to this Section will be billed at the rates set forth in Exhibit A.

3.1.3 For the period from October 2, 2003, through October 1, 2004, Level 3 may request new Line Sharing arrangements. For Line Sharing arrangements placed in service between October 2, 2003, and October 1, 2004, the rates will be as set forth in Exhibit A. After October 1, 2004, Level 3 may not request new Line Sharing arrangements under the terms of this Agreement.

3.1.4 The rates set forth herein will be applied retroactively back to the date set forth in the Triennial Review Order.

3.1.5 As of the earlier of October 2, 2006, or the date that the End User discontinues or moves service with Level 3, all Line Sharing arrangements pursuant to Section 3.1.3 of this Attachment shall be terminated.

3.1.6 The High Frequency Spectrum is defined as the frequency range above the voiceband on a copper Loop facility carrying analog circuit-switched voiceband transmissions. Access to the High Frequency Spectrum is intended to allow Level 3 the ability to provide Digital Subscriber Line (xDSL) data services to the End User for which BellSouth provides voice services. The High Frequency Spectrum shall be available for any version of xDSL complying with Spectrum Management Class 5 of ANSI T1.417, American National Standard for Telecommunications, Spectrum Management for Loop Transmission Systems. BellSouth will continue to have access to the low frequency portion of the Loop spectrum (from 300 Hertz to at least 3000 Hertz, and potentially up to 3400 Hertz, depending on equipment and facilities) for the purposes of providing voice service. Level 3 shall only use

xDSL technology that is within the PSD mask for Spectrum Management Class 5 as found in the above-mentioned document.

3.1.7 Access to the High Frequency Spectrum requires an unloaded, 2-wire copper Loop. An unloaded Loop is a copper Loop with no load coils, low-pass filters, range extenders, DAMLs, or similar devices and minimal bridged taps consistent with ANSI T1.413 and T1.601.

3.1.8 BellSouth will provide Loop Modification to Level 3 on an existing Loop in accordance with procedures as specified in Section 2 of this Attachment. BellSouth is not required to modify a Loop for access to the High Frequency spectrum if modification of that Loop significantly degrades BellSouth's voice service. If Level 3 requests that BellSouth modify a Loop and such modification significantly degrades the voice services on the Loop, Level 3 shall pay for the Loop to be restored to its original state.

3.1.9 Line Sharing shall only be available on Loops on which BellSouth is also providing, and continues to provide, analog voice service directly to the End User. In the event the End User terminates its BellSouth provided voice service for any reason, or in the event BellSouth disconnects the End User's voice service pursuant to its tariffs or applicable law, and Level 3 desires to continue providing xDSL service on such Loop, Level 3 shall be required to purchase a full stand-alone Loop UNE. To the extent commercially practicable, BellSouth shall give Level 3 notice in a reasonable time prior to disconnect, which notice shall give Level 3 an adequate opportunity to notify BellSouth of its intent to purchase such Loop. In those cases in which BellSouth no longer provides voice service to the End User and Level 3 purchases the full stand-alone Loop, Level 3 may elect the type of Loop it will purchase. Level 3 will pay the appropriate recurring and nonrecurring rates for such Loop as set forth in Exhibit A to this Attachment. In the event Level 3 purchases a voice grade Loop, Level 3 acknowledges that such Loop may not remain xDSL compatible.

3.1.10 If Level 3 reports a trouble on the High Frequency Spectrum of a Loop and no trouble actually exists on the BellSouth portion, BellSouth will charge Level 3 for any dispatching and testing (both inside and outside the CO) required by BellSouth in order to confirm the working status. The rates charged for no trouble found (NTF) shall be as set forth in Exhibit A of this Attachment.

3.1.11 Only one CLEC shall be permitted access to the High Frequency Spectrum of any particular Loop.

3.2 **Provisioning of Line Sharing and Splitter Space**

3.2.1 BellSouth will provide Level 3 with access to the High Frequency Spectrum as follows:

3.2.1.1 To order High Frequency Spectrum on a particular Loop, Level 3 must have a Digital Subscriber Line Access Multiplexer (DSLAM) collocated in the central office that serves the End User of such Loop.

3.2.1.2 Level 3 may provide its own splitters or may order splitters in a central office once it has installed its DSLAM in that central office. BellSouth will install splitters within thirty-six (36) calendar days of Level 3's submission of an error free Line Splitter Ordering Document (LSOD) to the BellSouth Complex Resale Support Group.

3.2.1.3 Once a splitter is installed on behalf of Level 3 in a central office in which Level 3 is located, Level 3 shall be entitled to order the High Frequency Spectrum on lines served out of that central office. BellSouth will bill and Level 3 shall pay the electronic or manual ordering charges as applicable when Level 3 orders High Frequency Spectrum for End User service.

3.2.1.4 BellSouth shall test the data portion of the Loop to ensure the continuity of the wiring for Level 3's data.

3.3 **BellSouth Provided Splitter – Line Sharing**

3.3.1 BellSouth will select, purchase, install, and maintain a central office POTS splitter and provide Level 3 access to data ports on the splitter. The splitter will route the High Frequency Spectrum on the circuit to Level 3's xDSL equipment in Level 3's collocation space. At least thirty (30) calendar days before making a change in splitter suppliers, BellSouth will provide Level 3 with a carrier notification letter, informing Level 3 of change. Level 3 shall purchase ports on the splitter in increments of eight (8), twenty-four (24), or ninety-six (96) ports in Alabama, Florida, Georgia, Kentucky, Louisiana, Mississippi, North Carolina and South Carolina. Level 3 shall purchase ports on the splitter in increments of twenty-four (24) or ninety-six (96) ports in Tennessee.

3.3.2 BellSouth will install the splitter in (i) a common area close to Level 3's collocation area, if possible; or (ii) in a BellSouth relay rack as close to Level 3's DS0 termination point as possible. Level 3 shall have access to the splitter for test purposes, regardless of where the splitter is placed in the BellSouth premises. For purposes of this section, a common area is defined as an area in the central office in which both Parties have access to a common test access point. A Termination Point is defined as the point of termination for Level 3 on the main distributing frame in the central office and is not the demarcation point set forth in Attachment 4 of this Agreement. BellSouth will cross-connect the splitter data ports to a specified Level 3 DS0 at such time that a Level 3 End User's service is established.

3.4 **CLEC Provided Splitter – Line Sharing**

3.4.1 Level 3 may at its option purchase, install and maintain central office POTS splitters in its collocation arrangements. Level 3 may use such splitters for access to its customers and to provide digital line subscriber services to its customers

using the High Frequency Spectrum. Existing Collocation rules and procedures and the terms and conditions relating to Collocation set forth in Attachment 4-Central Office shall apply.

3.4.2 Any splitters installed by Level 3 in its collocation arrangement shall comply with ANSI T1.413, Annex E, or any future ANSI splitter Standards. Level 3 may install any splitters that BellSouth deploys or permits to be deployed for itself or any BellSouth affiliate.

3.5 **Ordering – Line Sharing**

3.5.1 Level 3 shall use BellSouth's LSOD to order splitters from BellSouth and to activate and deactivate DS0 Collocation Connecting Facility Assignments (CFA) for use with High Frequency Spectrum.

3.5.2 BellSouth will provide Level 3 the LSR format to be used when ordering the High Frequency Spectrum.

3.5.3 BellSouth will provision High Frequency Spectrum in compliance with BellSouth's Products and Services Interval Guide available at the website at http://www.interconnection.bellsouth.com.

3.5.4 BellSouth will provide Level 3 access to Preordering LMU in accordance with the terms of this Agreement. BellSouth shall bill and Level 3 shall pay the rates for such services, as described in Exhibit A.

3.6 **Maintenance and Repair – Line Sharing**

3.6.1 Level 3 shall have access for repair and maintenance purposes to any Loop for which it has access to the High Frequency Spectrum. If Level 3 is using a BellSouth owned splitter, Level 3 may access the Loop at the point where the combined voice and data signal exits the central office splitter via a bantam test jack. If Level 3 provides its own splitter, it may test from the collocation space or the Termination Point.

3.6.2 BellSouth will be responsible for repairing voice services and the physical line between the NID at the customer's premises and the Termination Point. Level 3 will be responsible for repairing data services. Each Party will be responsible for maintaining its own equipment.

3.6.3 Level 3 shall inform its End Users to direct data problems to Level 3, unless both voice and data services are impaired, in which event the End Users should call BellSouth.

3.6.4 Once a Party has isolated a trouble to the other Party's portion of the Loop, the Party isolating the trouble shall notify the End User that the trouble is on the other Party's portion of the Loop.

3.6.5 Notwithstanding anything else to the contrary in this Agreement, when BellSouth receives a voice trouble and isolates the trouble to the physical collocation arrangement belonging to Level 3, BellSouth will notify Level 3. Level 3 will provide at least one but no more than two (2) verbal CFA pair changes to BellSouth in an attempt to resolve the voice trouble. In the event a CFA pair change resolves the voice trouble, Level 3 will provide BellSouth an LSR with the new CFA pair information within twenty-four (24) hours. If the owner of the collocation space fails to resolve the trouble by providing BellSouth with the verbal CFA pair changes, BellSouth may discontinue Level 3's access to the High Frequency Spectrum on such Loop. BellSouth will not be responsible for any loss of data as a result of this action.

3.7 **Line Splitting**

3.7.1 Line splitting allows a provider of data services (a Data LEC) and a provider of voice services (a Voice CLEC) to deliver voice and data service to End Users over the same Loop. The Voice CLEC and Data LEC may be the same or different carriers.

3.7.2 In the event Level 3 provides its own switching or obtains switching from a third party, Level 3 may engage in line splitting arrangements with another CLEC using a splitter, provided by Level 3, in a Collocation Arrangement at the central office where the loop terminates into a distribution frame or its equivalent.

3.7.3 Where Level 3 is purchasing a UNE-port and a UNE-loop, BellSouth shall offer line splitting pursuant to the following sections in this Attachment.

3.7.4 Level 3 shall provide BellSouth with a signed LOA between it and the Data LEC or Voice CLEC with which it desires to provision Line Splitting services, if Level 3 will not provide voice and data services.

3.7.5 End Users currently receiving voice service from a Voice CLEC through a UNE-P may be converted to Line Splitting arrangements by Level 3 or its authorized agent ordering Line Splitting Service. If the CLEC wishes to provide the splitter, the UNE-P arrangement will be converted to a stand-alone UNE Loop, a UNE port, two collocation cross connects and the high frequency spectrum line activation. If BellSouth owns the splitter, the UNE-P arrangement will be converted to a stand-alone UNE Loop, port, and one collocation cross connection.

3.7.6 When End Users on Loops using High Frequency Spectrum CO Based line sharing service are converted to Line Splitting, BellSouth will discontinue billing Level 3 for the High Frequency Spectrum. BellSouth will continue to bill the Data LEC for all associated splitter charges if the Data LEC continues to use a BellSouth splitter. It is the responsibility of Level 3 or its authorized agent to determine if the Loop is compatible for Line Splitting Service. Level 3 or its authorized agent may use the existing Loop unless it is not compatible with the Data LEC's data

service and Level 3 or its authorized agent submits an LSR to BellSouth to change the Loop.

3.8 **Provisioning Line Splitting and Splitter Space**

3.8.1 The Data LEC, Voice CLEC or BellSouth may provide the splitter. When Level 3 or its authorized agent owns the splitter, Line Splitting requires the following: a non-designed analog Loop from the serving wire center to the NID at the End User's location; a collocation cross connection connecting the Loop to the collocation space; a second collocation cross connection from the collocation space connected to a voice port; the high frequency spectrum line activation, and a splitter. The Loop and port cannot be a Loop and port combination (i.e. UNE-P), but must be individual stand-alone Network Elements. When BellSouth owns the splitter, Line Splitting requires the following: a non designed analog Loop from the serving wire center to the NID at the End User's location with CFA and splitter port assignments, and a collocation cross connection from the collocation space connected to a voice port.

3.8.2 An unloaded 2-wire copper Loop must serve the End User. The meet point for the Voice CLEC and the Data LEC is the point of termination on the MDF for the Data LEC's cable and pairs.

3.8.3 The foregoing procedures are applicable to migration to Line Splitting Service from a UNE-P arrangement, BellSouth Retail Voice Service, BellSouth High Frequency Spectrum (CO Based) Line Sharing.

3.8.4 For other migration scenarios to line splitting, BellSouth will work cooperatively with CLECs to develop methods and procedures to develop a process whereby a Voice CLEC and a Data LEC may provide services over the same Loop.

**3.9 Ordering – Line Splitting**

3.9.1 Level 3 shall use BellSouth's LSOD to order splitters from BellSouth and to activate and deactivate DS0 Collocation CFA for use with Line Splitting.

3.9.2 BellSouth shall provide Level 3 the LSR format to be used when ordering Line Splitting service.

3.9.3 BellSouth will provision Line Splitting service in compliance with BellSouth's Products and Services Interval Guide available at the website at http://www.interconnection.bellsouth.com.

3.9.4 BellSouth will provide Level 3 access to Preordering LMU in accordance with the terms of this Agreement. BellSouth shall bill and Level 3 shall pay the rates for such services as described in Exhibit A.

3.9.5 BellSouth will provide Loop modification to Level 3 on an existing Loop in accordance with procedures developed in the Line Sharing Collaborative. High

Frequency Spectrum (CO Based) Unbundled Loop Modification is a separate distinct service from Unbundled Loop Modification set forth in Section 2.5 of this Attachment. Procedures for High Frequency Spectrum (CO Based) Unbundled Loop Modification may be found on the web at: http://www.interconnection.bellsouth.com/html/unes.html. Nonrecurring rates for this offering are as set forth in Exhibit A of this Attachment.

**3.10 Maintenance – Line Splitting**

3.10.1 BellSouth will be responsible for repairing voice services and the physical loop between the NID at the customer's premises and the termination point. Level 3 will be responsible for maintaining the voice and data services. Each Party will be responsible for maintaining its own equipment.

3.10.2 Level 3 shall inform its End Users to direct all problems to Level 3 or its authorized agent.

3.10.3 If Level 3 is not the data provider, Level 3 shall indemnify, defend and hold harmless BellSouth from and against any claims, losses, actions, causes of action, suits, demands, damages, injury, and costs including reasonable attorney fees, which arise out of actions related to the data provider.

**4 Local Switching**

4.1 BellSouth shall provide non-discriminatory access to local circuit switching capability and local tandem switching capability on an unbundled basis, except as set forth in the Sections below to Level 3 for the provision of a telecommunications service.

4.2 **Local Circuit Switching Capability, including Tandem Switching Capability**

4.2.1 Local circuit switching capability is defined as all line-side and trunk-side facilities, plus the features, functions, and capabilities of the switch. The features, functions, and capabilities of the switch shall include the basic switching function of connecting lines to lines, lines to trunks, trunks to lines, and trunks to trunks. Local circuit switching includes all vertical features that the switch is capable of providing, including custom calling, custom local area signaling service features, and Centrex, as well as any technically feasible customized routing functions.

4.2.2 Notwithstanding BellSouth's general duty to unbundle local circuit switching, BellSouth shall not be required to unbundle local circuit switching for Level 3 when Level 3: (1) serves an End User with four (4) or more voice-grade (DS0) equivalents or lines served by BellSouth in Zone 1 of one of the following MSAs: Atlanta, GA; Miami, FL; Orlando, FL; Ft. Lauderdale, FL; Charlotte-Gastonia-Rock Hill, NC; Greensboro-Winston Salem-High Point, NC; Nashville, TN; and New Orleans, LA; or (2) serves an End User with a DS1 or higher capacity Loop in any service area covered by this Agreement. To the extent that Level 3 is serving any End User as described in (2) above as of October 2, 2003, such

arrangement may not remain in place any longer than April 1, 2004, after which such arrangement must be terminated by Level 3 or BellSouth shall convert such arrangement to tariff pricing. The filing of this Agreement with the applicable Commission shall constitute the filing of the joint transition plan specified by the FCC.

4.2.3 Rates for unbundled switching at the DS1 level and above or for combinations with unbundled switching at the DS1 level and above provisioned prior to the Effective Date of this Agreement shall be those rates set forth in Exhibit A of this Attachment until April 1, 2004.

4.2.4 Local Switching that is not required to be provided as a UNE will be provided pursuant to a separate agreement or a tariff, at BellSouth's discretion.

4.2.5 Unbundled Local Switching consists of three separate unbundled elements: Unbundled Ports, End Office Switching Functionality, and End Office Interoffice Trunk Ports.

4.2.6 Unbundled Local Switching combined with Common Transport and, if necessary, Tandem Switching provides to Level 3's End User local calling and the ability to presubscribe to a primary carrier for intraLATA and/or to presubscribe to a primary carrier for interLATA toll service.

4.2.7 Provided that Level 3 purchases unbundled local switching from BellSouth and uses the BellSouth Carrier Identification Code (CIC) for its End Users' Local Preferred Interexchange Carrier (LPIC) or if a BellSouth local End User selects BellSouth as its LPIC, then the Parties will consider as local any calls originated by a Level 3 local End User, or originated by a BellSouth local End User and terminated to a Level 3 local End User, where such calls originate and terminate in the same LATA, except for those calls originated and terminated through switched access arrangements (i.e., calls that are transported by a Party other than BellSouth). For such calls, BellSouth will charge Level 3 the UNE elements for the BellSouth facilities utilized. Neither Party shall bill the other originating or terminating switched access charges for such calls. Intercarrier compensation for local calls between BellSouth and Level 3 shall be as described in BellSouth's UNE Local Call Flows set forth on BellSouth's website.

4.2.8 Where Level 3 purchases unbundled local switching from BellSouth but does not use the BellSouth CIC for its End Users' LPIC, BellSouth will consider as local those direct dialed telephone calls that originate from a Level 3 End User and terminate within the basic local calling area or within the extended local calling areas and that are dialed using seven (7) or ten (10) digits as defined and specified in Section A3 of BellSouth's General Subscriber Services Tariffs (GSST). For such local calls, BellSouth will charge Level 3 the UNE elements for the BellSouth facilities utilized. Intercarrier compensation for local calls between BellSouth and Level 3 shall be as described in BellSouth's UNE Local Call Flows set forth on BellSouth's website.

4.2.9 For any calls that originate and terminate through switched access arrangements (i.e., calls that are transported by a party other than BellSouth), BellSouth shall bill Level 3 the UNE elements for the BellSouth facilities utilized. Each Party may bill the toll provider originating or terminating switched access charges as appropriate.

4.2.10 **Unbundled Port Features**

4.2.10.1 Charges for Unbundled Port are as set forth in Exhibit A, and as specified in such exhibit, may or may not include individual features.

4.2.10.2 Where applicable and available, non-switch-based services may be ordered with the Unbundled Port at BellSouth's retail rates.

4.2.10.3 Any features that are not currently available but are technically feasible through the switch can be requested through the BFR/NBR process.

4.2.10.4 BellSouth will provide to Level 3 selective routing of calls to a requested Operator System platform pursuant to this Attachment. Any other routing requests by Level 3 will be made pursuant to the BFR/NBR Process as set forth in Attachment 11.

4.2.11 **Remote Call Forwarding**

4.2.11.1 As an option, BellSouth shall make available to Level 3 an unbundled port with Remote Call Forwarding capability (URCF service). URCF service combines the functionality of unbundled local switching, tandem switching and common transport to forward calls from the URCF service telephone number (the number dialed by the calling party) to another telephone number selected by the URCF service subscriber. When ordering URCF service, Level 3 will ensure that the following conditions are satisfied:

4.2.11.1.1 That the End User of the forward-to number (service) agrees to receive calls forwarded using the URCF service (if such End User is different from the URCF service End User);

4.2.11.1.2 That the forward-to number (service) is equipped with sufficient capacity to receive the volume of calls that will be generated from the URCF service;

4.2.11.1.3 That the URCF service will not be utilized to forward calls to another URCF or similar service; and

4.2.11.1.4 That the forward-to number (service) is not a public safety number (e.g. 911, fire or police number).

4.2.11.2 In addition to the charge for the URCF service port, BellSouth shall charge Level 3 the rates set forth in Exhibit A for unbundled local switching, tandem switching, and common transport, including all associated usage incurred for calls from the URCF service telephone number (the number dialed by the calling party) to the forward-to number (service).

4.2.12 **Provision for Local Switching**

4.2.12.1 BellSouth shall perform routine testing (e.g., Mechanized Loop Tests (MLT) and test calls such as 105, 107 and 108 type calls) and fault isolation on a mutually agreed upon schedule.

4.2.12.2 BellSouth shall control congestion points such as those caused by radio station call-ins and network routing abnormalities. All traffic shall be restricted in a non-discriminatory manner.

4.2.12.3 BellSouth shall perform manual call trace and permit customer originated call trace. BellSouth shall provide Switching Service Point (SSP) capabilities and signaling software to interconnect the signaling links destined to the Signaling Transfer Point Switch (STPS). These capabilities shall adhere to the technical specifications set forth in the applicable industry standard technical references.

4.2.12.4 BellSouth shall provide interfaces to adjuncts through Telcordia standard interfaces. These adjuncts can include, but are not limited to, the Service Circuit Node and Automatic Call Distributors. BellSouth shall offer to Level 3 all Advanced Intelligent Network (AIN) triggers in connection with its SMS/SCE offering.

4.2.12.5 BellSouth shall provide access to SS7 Signaling Network or Multi-Frequency trunking if requested by Level 3.

4.2.13 **Local Switching Interfaces.**

4.2.13.1 Level 3 shall order ports and associated interfaces compatible with the services it wishes to provide as listed in Exhibit A. BellSouth shall provide the following local switching interfaces:

4.2.13.1.1 Standard Tip/Ring interface including loopstart or groundstart, on-hook signaling (e.g., for calling number, calling name and message waiting lamp);

4.2.13.1.2 Coin phone signaling;

4.2.13.1.3 Basic Rate Interface ISDN adhering to appropriate Telcordia Technical Requirements;

4.2.13.1.4 Two-wire analog interface to PBX;

4.2.13.1.5 Four-wire analog interface to PBX;

4.2.13.1.6 Four-wire DS1 interface to PBX or customer provided equipment (e.g. computers and voice response systems);

4.2.13.1.7 Primary Rate ISDN to PBX adhering to ANSI standards Q.931, Q.932 and appropriate Telcordia Technical Requirements;

4.2.13.1.8 Switched Fractional DS1 with capabilities to configure Nx64 channels (where N = 1 to 24); and

4.2.13.1.9 Loops adhering to Telcordia TR-NWT-08 and TR-NWT-303 specifications to interconnect Digital Loop Carriers.

4.2.14 All End Users of Level 3 who have service provisioned via 4-Wire ISDN DS1 Port with E911 Locator Capability shall physically be located in the E911 Tandem Switch service area.

4.2.15 Level 3 shall pass its End User's telephone number to BellSouth over the Primary Interface (PRI) trunk group via ANI or via direct Centralized Automated Message Accounting (CAMA) trunks to the appropriate E911 tandem switch.

4.2.16 Level 3 shall maintain the individual telephone number and the correct corresponding address/location data, including maintaining the End User listed address as the actual physical End User location in the E911 Automatic Location Identification (ALI) Database.

4.2.17 Level 3 will be responsible and liable for any errors resulting from the submission of invalid telephone number and address/location data for the CLEC's End Users.

4.3 **Tandem Switching**

4.3.1 The Tandem Switching capability Network Element is defined as: (i) trunk-connect facilities, which include, but are not limited to, the connection between trunk termination at a cross connect panel and switch trunk card; (ii) the basic switch trunk function of connecting trunks to trunks; and (iii) the functions that are centralized in the Tandem Switches (as distinguished from separate end office switches), including but not limited to call recording, the routing of calls to operator services and signaling conversion features.

4.3.1.1 Where Level 3 utilizes portions of the BellSouth network in originating or terminating traffic, the Tandem Switching rates are applied in call scenarios where the Tandem Switching Network Element has been utilized. Because switch recordings cannot accurately indicate on a per call basis when the Tandem Switching Network Element has been utilized for an interoffice call originating from a UNE port and terminating to a BellSouth, Independent Company or Facility-Based CLEC office, BellSouth has developed, based upon call studies, a melded rate that takes into account the average percentage of calls that utilize Tandem Switching in these scenarios. BellSouth shall apply the melded Tandem Switching rate for every call in these scenarios. BellSouth shall utilize the melded Tandem Switching Rate until BellSouth has the capability to measure actual Tandem Switch usage in each call scenario specifically mentioned above, at which point the rate for the actual Tandem Switch usage shall apply. The UNE Call Flows set forth on BellSouth's website, as amended from time to time and incorporated herein by this reference, illustrate when the full or melded Tandem Switching rates apply for specific scenarios.

4.3.2 Technical Requirements

4.3.2.1 Tandem Switching shall have the same capabilities or equivalent capabilities as those described in Telcordia TR-TSY-000540 Issue 2R2, Tandem Supplement, June 1, 1990. The requirements for Tandem Switching include but are not limited to the following:

4.3.2.1.1 Tandem Switching shall provide signaling to establish a tandem connection;

4.3.2.1.2 Tandem Switching will provide screening as jointly agreed to by Level 3 and BellSouth;

4.3.2.1.3 Where applicable, Tandem Switching shall provide AIN triggers supporting AIN features where such routing is not available from the originating end office switch, to the extent such Tandem switch has such capability;

4.3.2.1.4 Where applicable, Tandem Switching shall provide access to Toll Free number database;

4.3.2.1.5 Tandem Switching shall provide connectivity to Public Safety Answering Point (PSAP)s where 911 solutions are deployed and the tandem is used for 911; and

4.3.2.1.6 Where appropriate, Tandem Switching shall provide connectivity for the purpose of routing transit traffic to and from other carriers.

4.3.2.2 BellSouth may perform testing and fault isolation on the underlying switch that is providing Tandem Switching. Such testing shall be testing routinely performed by BellSouth. The results and reports of the testing shall be made available to Level 3.

4.3.2.3 BellSouth shall control congestion points and network abnormalities. All traffic will be restricted in a non-discriminatory manner.

4.3.2.4 Tandem Switching shall process originating toll free traffic received from Level 3's local switch.

4.3.2.5 In support of AIN triggers and features, Tandem Switching shall provide SSP capabilities when these capabilities are not available from the Local Switching Network Element to the extent such Tandem Switch has such capability.

4.3.3 Upon Level 3's purchase of overflow trunk groups, Tandem Switching shall provide an alternate routing pattern for Level 3's traffic overflowing from direct end office high usage trunk groups.

4.4 **AIN Selective Carrier Routing for Operator Services, Directory Assistance and Repair Centers**

4.4.1 Where BellSouth provides local switching to Level 3, BellSouth will provide AIN Selective Carrier Routing (AIN SCR) at the request of Level 3. AIN SCR will provide Level 3 with the capability of routing operator calls, 0+ and 0- and 0+ NPA Local Numbering Plan Area (LNPA), 555-1212 directory assistance, 1+411 directory assistance and 611 repair center calls to pre-selected destinations.

4.4.2 Level 3 shall order AIN SCR through its Account Team and/or Local Contract Manager. AIN SCR must first be established regionally and then on a per central office per state basis.

4.4.3 AIN SCR is not available in DMS 10 switches.

4.4.4 Where AIN SCR is utilized by Level 3, the routing of Level 3's End User calls shall be pursuant to information provided by Level 3 and stored in BellSouth's AIN SCR Service Control Point database. AIN SCR shall utilize a set of Line Class Codes (LCCs) unique to a basic class of service assigned on an "as needed" basis. The same LCCs will be assigned in each central office where AIN SCR is established.

4.4.5 Upon ordering AIN SCR Regional Service, Level 3 shall remit to BellSouth the Regional Service Order nonrecurring charges set forth in Exhibit A of this Attachment. There shall be a nonrecurring End Office Establishment Charge per office due at the addition of each central office where AIN SCR will be utilized. Said nonrecurring charge shall be as set forth in Exhibit A of this Attachment. For each Level 3 End User activated, there shall be a nonrecurring End User Establishment charge as set forth in Exhibit A of this Attachment. Level 3 shall pay the AIN SCR Per Query Charge set forth in Exhibit A of this Attachment.

4.4.6 This Regional Service Order nonrecurring charge will be non-refundable and will be paid with one half due up-front with the submission of all fully completed required forms including: Regional Selective Carrier Routing (SCR) Order Request-Form A, Central Office AIN SCRSCR Order Request - Form B, AIN SCR Central Office Identification Form - Form C, AIN SCR Routing Options Selection Form - Form D, and Routing Combinations Table - Form E. BellSouth has thirty (30) calendar days to respond to Level 3's fully completed firm order as a Regional Service Order. With the delivery of this firm order response to Level 3, BellSouth considers that the delivery schedule of this service commences. The remaining half of the Regional Service Order payment must be paid when at least ninety (90) percent of the Central Offices listed on the original order have been turned up for the service.

4.4.7 The nonrecurring End Office Establishment Charge will be billed to Level 3 following BellSouth's normal monthly billing cycle for this type of order.

4.4.8 End-User Establishment Orders will not be turned-up until the second payment is received for the Regional Service Order. The nonrecurring End-User

Establishment Charges will be billed to Level 3 following BellSouth's normal monthly billing cycle for this type of order.

4.4.9 Additionally, the AIN SCR Per Query Charge will be billed to Level 3 following the normal billing cycle for per query charges.

4.4.10 All other network components needed, for example, unbundled switching, unbundled local transport, etc., will be billed per contracted rates.

**4.5 Selective Call Routing Using Line Class Codes (SCR-LCC)**

4.5.1 Where Level 3 purchases unbundled local switching from BellSouth and utilizes an operator services provider other than BellSouth, BellSouth will route Level 3's End User calls to that provider through Selective Call Routing.

4.5.2 Selective Call Routing using Line Class Codes (SCR-LCC) provides the capability for Level 3 to have its Operator Call Processing/Directory Assistance (OCP/DA) calls routed to BellSouth's OCP/DA platform for BellSouth provided Custom Branded or Unbranded OCP/DA or to its own or an alternate OCP/DA platform for Self-Branded OCP/DA. SCR-LCC is only available if line class code capacity is available in the requested BellSouth end office switches.

4.5.3 Custom Branding for Directory Assistance (DA) is not available for certain classes of service, including but not limited to Hotel/Motel services, WATS service, and certain PBX services.

4.5.4 Where available, Level 3 specific and unique LCCs are programmed in each BellSouth end office switch where Level 3 intends to serve End Users with customized OCP/DA branding. The LCCs specifically identify Level 3's End Users so OCP/DA calls can be routed over the appropriate trunk group to the requested OCP/DA platform. Additional LCCs are required in each end office if the end office serves multiple NPAs (i.e., a unique LCC is required per NPA), and/or if the end office switch serves multiple rate areas and Level 3 intends to provide Level 3 -branded OCP/DA to its End Users in these multiple rate areas.

4.5.5 SCR-LCC supporting Custom Branding and Self Branding require Level 3 to order dedicated trunking from each BellSouth end office identified by Level 3, either to the BellSouth Traffic Operator Position System (TOPS) for Custom Branding or to the Level 3 Operator Service Provider for Self Branding. Separate trunk groups are required for Operator Services and for DA. Rates for trunks are set forth in applicable BellSouth tariffs.

4.5.6 Unbranding - Unbranded DA and/or OCP calls ride common trunk groups provisioned by BellSouth from those end offices identified by Level 3 to the BellSouth TOPS.

4.5.7 The Rates for SCR-LCC are as set forth in this Attachment. There is a nonrecurring charge for the establishment of each LCC in each BellSouth central

office. Furthermore, for Unbranded and Custom Branded OCP/DA provided by BellSouth Operator Services with unbundled ports and unbundled port/loop switch combinations, monthly recurring usage charges shall apply for the UNEs necessary to provide the service, such as end office and tandem switching and common transport. A flat rated end office switching charge shall apply to Self-Branded OCP/DA when used in conjunction with unbundled ports and unbundled port/loop switch combinations.

**5 Unbundled Network Element Combinations**

5.1 For purposes of this Section, references to "Currently Combined" Network Elements shall mean that the particular Network Elements requested by Level 3 are in fact already combined by BellSouth in the BellSouth network. References to "Ordinarily Combined" Network Elements shall mean that the particular Network Elements requested by Level 3 are not already combined by BellSouth in the location requested by Level 3 but are elements that are typically combined in BellSouth's network. References to "Not Typically Combined" Network Elements shall mean that the particular Network Elements requested by Level 3 are not elements that BellSouth combines for its use in its network.

5.1.1 Upon request, BellSouth shall perform the functions necessary to combine unbundled Network Elements in any manner, even if those elements are not ordinarily combined in BellSouth's network, provided that such combination is technically feasible and will not undermine the ability of other carriers to obtain access to unbundled Network Elements or to interconnect with BellSouth's network.

**5.2 Enhanced Extended Links (EELs)**

5.2.1 EELs are combinations of unbundled Loops and unbundled dedicated transport as defined in this Attachment, together with any facilities, equipment, or functions necessary to combine those Network Elements. BellSouth shall provide Level 3 with EELs where the underlying UNEs are available and in all instances where the requesting carrier meets the eligibility requirements, if applicable.

5.2.2 High-capacity EELs are combinations of loop and transport UNEs or commingled loop and transport facilities at the DS1 and/or DS3 level as described in 47 CFR 51.318(b). High-capacity EELs must comply with the service eligibility requirements set forth in 5.2.4 below.

5.2.3 By placing an order for a high-capacity EEL, Level 3 thereby certifies that the service eligibility criteria set forth herein are met for access to a converted high-capacity EEL, a new high-capacity EEL, or part of a high-capacity commingled EEL as a UNE. BellSouth shall have the right to audit Level 3's high-capacity EELs as specified below.

5.2.4 If a high-capacity EEL or Ordinarily Combined Network Element is not readily available but can be made available through routine network modifications, as

provided by Section 1.8.2 of this Attachment. Level 3 may request BellSouth to perform such routine network modifications. The request may not be used to place fiber.

5.2.5 Service Eligibility Criteria

5.2.5.1 Level 3 must certify for each high-capacity EEL that all of the following service eligibility criteria are met:

5.2.5.1.1 Level 3 has received state certification to provide local voice service in the area being served;

5.2.5.2 For each combined circuit, including each DS1 circuit, each DS1 EEL, and each DS1-equivalent circuit on a DS3 EEL:

5.2.5.2.1 1) Each circuit to be provided to each End User will be assigned a local number prior to the provision of service over that circuit;

5.2.5.2.2 2) Each DS1-equivalent circuit on a DS3 EEL must have its own local number assignment so that each DS3 must have at least twenty-eight (28) local voice numbers assigned to it;

5.2.5.2.3 3) Each circuit to be provided to each End User will have 911 or E911 capability prior to provision of service over that circuit;

5.2.5.2.4 4) Each circuit to be provided to each End User will terminate in a collocation arrangement that meets the requirements of 47 CFR 51.318(c);

5.2.5.2.5 5) Each circuit to be provided to each End User will be served by an interconnection trunk over which Level 3 will transmit the calling party's number in connection with calls exchanged over the trunk;

5.2.5.2.6 6) For each twenty-four (24) DS1 EELs or other facilities having equivalent capacity, Level 3 will have at least one (1) active DS1 local service interconnection trunk over which Level 3 will transmit the calling party's number in connection with calls exchanged over the trunk;

5.2.5.2.7 7) Each circuit to be provided to each End User will be served by a switch capable of switching local voice traffic.

5.2.6 BellSouth may, on an annual basis, audit Level 3's records in order to verify compliance with the qualifying service eligibility criteria. The audit shall be conducted by a third party independent auditor, and the audit must be performed in accordance with the standards established by the American Institute for Certified Public Accountants (AICPA). To the extent the independent auditor's report concludes that Level 3 failed to comply with the service eligibility criteria, Level 3 must true-up any difference in payments, convert all noncompliant circuits to the appropriate service, and make the correct payments on a going-forward basis. In

the event the auditor's report concludes that , Level 3 did not comply in any material respect with the service eligibility criteria, Level 3 shall reimburse BellSouth for the reasonable and demonstrable cost of the independent auditor. To the extent the auditor's report concludes that Level 3 did comply in all material respects with the service eligibility criteria, BellSouth will reimburse Level 3 for its reasonable and demonstrable costs associated with the audit. Level 3 will maintain appropriate documentation to support its certifications.

5.2.7 In the event Level 3 converts special access services to UNEs, Level 3 shall be subject to the termination liability provisions in the applicable special access tariffs, if any.

**5.3 UNE Port/Loop Combinations**

5.3.1 Combinations of port and loop unbundled Network Elements along with switching and transport unbundled Network Elements provide local exchange service for the origination or termination of calls. Port/loop combinations support the same local calling and feature requirements as described in the Unbundled Local Switching or Port section of this Attachment and the ability to presubscribe to a primary carrier for intraLATA toll service and/or to presubscribe to a primary carrier for interLATA toll service.

5.3.2 BellSouth is not required to provide combinations of port and loop Network Elements on an unbundled basis in locations where, pursuant to FCC and Commission rules, BellSouth is not required to provide local circuit switching as an unbundled Network Element.

5.3.3 BellSouth shall not be required to provide local circuit switching as a UNE in density Zone 1, as defined in 47 CFR 69.123 as of January 1, 1999 of the Atlanta, GA; Miami, FL; Orlando, FL; Ft. Lauderdale, FL; Charlotte-Gastonia-Rock Hill, NC; Greensboro-Winston Salem-High Point, NC; Nashville, TN; and New Orleans, LA, MSAs to Level 3 if Level 3's customer has four (4) or more DS0 equivalent lines.

5.3.4 BellSouth shall not be required to provide local circuit switching as a UNE or combination of UNEs if the End User is being served by a BellSouth DS1 or higher capacity Loop in any service area covered by this Agreement. To the extent that Level 3 is serving any End User as described above as of October 2, 2003, such arrangement may not remain in place any longer than April 1, 2004, after which such arrangement must be terminated by Level 3 or BellSouth shall convert such arrangement to tariff pricing. The filing of this Agreement with the applicable Commission shall constitute the filing of the joint transition plan specified by the FCC.

5.3.5 BellSouth shall make 911 updates in the BellSouth 911 database for Level 3's UNE port/Loop combinations. BellSouth will not bill Level 3 for 911 surcharges.

Level 3 is responsible for paying all 911 surcharges to the applicable governmental agency.

**5.4 Rates**

5.4.1 The rates for the Currently Combined Network Elements specifically set forth in Exhibit A of this Attachment shall be the rates associated with such combinations. Such rates should be in accordance with applicable law. Where a Currently Combined combination is not specifically set forth in Exhibit A, the rate for such Currently Combined combination of Network Elements shall be the sum of the recurring rates for those individual Network Elements in addition to the applicable non-recurring switch-as-is charge set forth in Exhibit A.

5.4.2 The rates for the Ordinarily Combined Network Elements specifically set forth in Exhibit A of this Attachment shall be the non-recurring and recurring charges for those combinations. Such rates should be in accordance with applicable law. Where an Ordinarily Combined combination is not specifically set forth in Exhibit A, the rate for such Ordinarily Combined combination of Network Elements shall be the sum of the recurring and non-recurring rates for those individual Network Elements as set forth in Exhibit A.

5.4.3 Except as set forth in this Section 5, BellSouth shall provide UNE port/loop combinations specifically set forth in Exhibit A that are Currently Combined or Ordinarily Combined in BellSouth's network at the cost-based rates in Exhibit A.

5.4.4 BellSouth shall provide other Currently Combined and Ordinarily Combined and Not Typically Combined UNE Combinations to Level 3 in addition to those specifically referenced in this Section 5 above, where available. To the extent Level 3 requests a combination for which BellSouth does not have rates and methods and procedures in place to provide such combination, rates and/or methods and procedures for such combination will be developed pursuant to the BFR/NBR process.

**6 Transport, Channelization and Dark Fiber**

**6.1 Transport**

6.1.1 BellSouth shall provide nondiscriminatory access, in accordance with FCC Rules 51.311, 51.319, and Section 251(c)(3) of the Act to interoffice transmission facilities described in this Section 6 on an unbundled basis to Level 3 for the provision of a qualifying service, as set forth herein.

6.1.1.1 Dedicated Transport is defined as BellSouth's interoffice transmission facilities, dedicated to a particular customer or carrier that Level 3 uses for transmission between wire centers or switches owned by BellSouth and within the same LATA, including those instances where BellSouth has local switching equipment, "reverse collocated" in a non-BellSouth premise, as defined by the FCC rules.

6.1.1.2 Dark Fiber Transport, defined as BellSouth's optical transmission facilities without attached signal regeneration, multiplexing, aggregation or other electronics, between wire centers or switches owned by BellSouth and within the same LATA;

6.1.1.3 Common (Shared) Transport, defined as transmission facilities shared by more than one carrier, including BellSouth, between end office switches, between end office switches and tandem switches, and between tandem switches, in BellSouth's network. Where BellSouth Network Elements are connected by intraoffice wiring, such wiring is provided as part of the Network Element and is not Common (Shared) Transport.

6.1.1.3.1 Notwithstanding any other provision of this Agreement, BellSouth will only provide unbundled access to Common (Shared) Transport to the extent BellSouth is required to provide and is providing unbundled Local Circuit Switching to Level 3.

6.1.2 BellSouth shall:

6.1.2.1 Provide Level 3 exclusive use of Dedicated Transport to a particular customer or carrier, or shared use of the features, functions, and capabilities of interoffice transmission facilities shared by more than one customer or carrier;

6.1.2.2 Provide all technically feasible features, functions, and capabilities of the transport facility;

6.1.2.3 Permit, to the extent technically feasible, Level 3 to connect such interoffice facilities to equipment designated by Level 3, including but not limited to, Level 3's collocated facilities; and

6.1.2.4 Permit, to the extent technically feasible, Level 3 to obtain the functionality provided by BellSouth's digital cross-connect systems.

6.1.3 Technical Requirements of Common (Shared) Transport

6.1.3.1 Common (Shared) Transport provided on DS1, DS3, and STS-1 circuits shall at a minimum meet the performance, availability, jitter, and delay requirements specified for Central Office to Central Office (CO to CO) connections in the applicable industry standards.

6.1.3.2 BellSouth shall be responsible for the engineering, provisioning, and maintenance of the underlying equipment and facilities that are used to provide Common (Shared) Transport.

6.1.3.3 At a minimum, Common (Shared) Transport shall meet all of the requirements set forth in the applicable industry standards.

6.2 **Dedicated Transport**

6.2.1 BellSouth shall offer Dedicated Transport in each of the following ways:

6.2.1.1 As capacity on a shared UNE facility.

6.2.1.2 As a circuit (e.g., DS0, DS1, DS3) dedicated to Level 3.

6.2.2 Dedicated Transport may be provided over facilities such as optical fiber, copper twisted pair, and coaxial cable, and shall include transmission equipment such as line terminating equipment, amplifiers, and regenerators.

6.2.3 Level 3 may obtain a maximum of twelve (12) unbundled dedicated DS3 circuits, or their equivalent, for any single route at the UNE rates set forth in Exhibit A for which dedicated DS3 transport is available as unbundled transport. Additional capacity may be purchased pursuant to the rates, terms and conditions as set forth in the applicable tariff. A route is defined as a transmission path between one of BellSouth's wire centers or switches and another of BellSouth's wire centers or switches. A route between two (2) points may pass through one or more intermediate wire centers or switches. Transmission paths between identical end points are the same "route", irrespective of whether they pass through the same intermediate wire centers or switches, if any.

6.2.4 Any request to re-terminate one end of a circuit will require the issuance of new service and disconnection of the existing service and the applicable charges in Exhibit A shall apply, and the re-terminated circuit shall be considered a new circuit as of the installation date.

6.2.5 If Dedicated Transport is not readily available but can be made available through routine network modifications, as defined in Section 1.8.2 of this Attachment. Level 3 may request BellSouth to perform such routine network modifications. The request may not be used to place fiber.

6.2.6 Technical Requirements

6.2.6.1 The entire designated transmission service (e.g., DS0, DS1, DS3) shall be dedicated to Level 3 designated traffic.

6.2.6.2 For DS1 or DS3 circuits, Dedicated Transport shall at a minimum meet the performance, availability, jitter, and delay requirements specified for Customer Interface to Central Office (CI to CO) connections in the applicable industry standards.

6.2.6.3 BellSouth shall offer the following interface transmission rates for Dedicated Transport:

6.2.6.3.1 DS0 Equivalent;

6.2.6.3.2 DS1;

6.2.6.3.3 DS3; and

6.2.6.3.4 SDH (Synchronous Digital Hierarchy) Standard interface rates are in accordance with International Telecommunications Union (ITU) Recommendation G.707 and Plesiochronous Digital Hierarchy (PDH) rates per ITU Recommendation G.704.

6.2.6.4 BellSouth shall design Dedicated Transport according to its network infrastructure. Level 3 shall specify the termination points for Dedicated Transport.

6.2.6.5 At a minimum, Dedicated Transport shall meet each of the requirements set forth in the applicable industry technical references.

6.2.6.6 BellSouth Technical References:

6.2.6.6.1 TR-TSY-000191 Alarm Indication Signals Requirements and Objectives, Issue 1, May 1986.

6.2.6.6.2 TR 73501 LightGate®Service Interface and Performance Specifications, Issue D, June 1995.

6.2.6.6.3 TR 73525 MegaLink®Service, MegaLink Channel Service and MegaLink Plus Service Interface and Performance Specifications, Issue C, May 1996.

**6.3 Unbundled Channelization (Multiplexing)**

6.3.1 Unbundled Channelization (UC) provides the optional multiplexing capability that will allow a DS1 (1.544 Mbps) or DS3 (44.736 Mbps) or STS-1 (51.84 Mbps) UNE or collocation cross connect to be multiplexed or channelized at a BellSouth central office. Channelization can be accomplished through the use of a multiplexer or a digital cross connect system at the discretion of BellSouth. Once UC has been installed, Level 3 may request channel activation on an as needed basis and BellSouth shall connect the requested facilities via Central Office Channel Interfaces (COCIs). The COCI must be compatible with the lower capacity facility and ordered with the lower capacity facility. This service is available as defined in NECA 4.

6.3.2 BellSouth shall make available the following channelization systems and interfaces:

6.3.2.1 DS1 Channelization System: channelizes a DS1 signal into a maximum of twenty-four (24) DS0s. The following Central Office Channel Interfaces (COCI) are available: Voice Grade, Digital Data and ISDN.

6.3.2.2 DS3 Channelization System: channelizes a DS3 signal into a maximum of twenty-eight (28) DS1s. A DS1 COCI is available with this system.

6.3.2.3 STS-1 Channelization System: channelizes a STS-1 signal into a maximum of twenty-eight (28) DS1s. A DS1 COCI is available with this system.

6.3.2.4 AMI and B8ZS line coding with either Super Frame (SF) and Extended Super Frame (ESF) framing formats will be supported as an optional feature on DS1 facilities.

6.3.3 Technical Requirements

6.3.3.1 In order to assure proper operation with BellSouth provided central office multiplexing functionality, Level 3's channelization equipment must adhere strictly to form and protocol standards. Level 3 must also adhere to such applicable industry standards for the multiplex channel bank, for voice frequency encoding, for various signaling schemes, and for sub rate digital access.

6.3.3.2 TR 73501 LightGate®Service Interface and Performance Specifications, Issue D, June 1995

6.4 **Dark Fiber Transport**

6.4.1 Dark Fiber Transport is strands of optical fiber existing in aerial or underground structure. BellSouth will not provide line terminating elements, regeneration or other electronics necessary for Level 3 to utilize Dark Fiber Transport.

6.4.2 If Dark Fiber Transport is not readily available but can be made available through routine network modifications, as defined in Section 1.8.2 of this Attachment. Level 3 may request BellSouth to perform such routine network modifications. The request may not be used to place fiber.

6.4.3 Requirements

6.4.3.1 BellSouth shall make available Dark Fiber Transport where it exists in BellSouth's network and where, as a result of future building or deployment, it becomes available. Dark Fiber Transport will not be deemed available if (1) it is used by BellSouth for maintenance and repair purposes, (2) it is designated for use pursuant to a firm order placed by another customer, (3) it is restricted for use by all carriers, including BellSouth, because of transmission problems or because it is scheduled for removal due to documented changes to roads and infrastructure, or (4) BellSouth has funded, documented plans to use the fiber within a two-year planning period. BellSouth is not required to place fibers for Dark Fiber Transport if there are none available.

6.4.3.2 Level 3 is solely responsible for testing the quality of the Dark Fiber Transport to determine its usability and performance specifications.

6.4.3.3 BellSouth shall use its best efforts to provide to Level 3 information regarding the location, availability and performance of Dark Fiber Transport within ten (10) business days after receiving a request from Level 3. Within such time period, BellSouth shall send written confirmation of availability of the Dark Fiber Transport.

6.4.3.4 If Bell South determines that Dark Fiber Transport is not available over a particular route, in its response, and upon receipt of acceptable non-disclosure agreement from Level 3, Bell South will provide information regarding: (i) the number of dark fiber strands reserved for maintenance purposes, (ii) the number of fiber strands reserved for Bell South's firm customer orders, (iii) the number of fiber strands otherwise not available for one of the reasons provided in section 6.4.3.1 above, and (iv) the total number of strands on the requested route. In this response, Bell South shall also inform Level 3 if a routine network modification could be implemented to make dark fiber available along the requested route. In its response, Bell South will inform Level 3 if fewer than the requested number of dark fiber strands are available on the requested route. Nothing herein shall be construed to limit Level 3's ability to challenge, at the Commission, BellSouth's determination that dark fiber is unavailable.

6.4.3.5 If the requested Dark Fiber Transport is available, BellSouth shall use its commercially reasonable efforts to provision the Dark Fiber Transport to Level 3 within twenty (20) business days after Level 3 submits a valid, error free LSR. Provisioning includes identification of appropriate connection points (e.g., LGX) to enable Level 3 to connect Level 3 provided transmission media (e.g., optical fiber) or equipment to the Dark Fiber Transport.

## 7 Databases

**7.1** Call Related Databases are the databases set forth in this Attachment, other than OSS, that are used in signaling networks for billing and collection, or the transmission, routing or other provision of a telecommunications service. Notwithstanding anything to the contrary herein, BellSouth shall only provide unbundled access to BellSouth Switched Access (SWA) 8XX Toll Free Dialing Ten Digit Screening Service, Line Information Database (LIDB), Signaling, Signaling Link Transport, Signaling Transfer Points, SS7 AIN Access, Service Control Point\Databases, Local Number Portability Databases, SS7 Network Interconnection, and Calling Name (CNAM) Database Service at the prices set forth herein where BellSouth is required to provide and is providing unbundled access to local circuit switching to Level 3. Notwithstanding the foregoing, Bell South shall provide Level 3 with non-discriminatory access to 911 and E911 databases on an unbundled basis as required by FCC rule 51.319(f) in accordance with Section 11 of this Attachment.

7.2 To the extent unbundled local circuit switching is converted to market based switching pursuant to Section 4.2.2 of this Attachment, BellSouth may, at its discretion, provide access to BellSouth Switched Access (SWA) 8XX Toll Free Dialing Ten Digit Screening Service, LIDB, Signaling, Signaling Link Transport, Signaling Transfer Points, SS7 AIN Access, Service Control Point\Databases, Local Number Portability Databases, SS7 Network Interconnection, Calling Name (CNAM) at market based rates pursuant to a separate agreement or tariff.

**8 BellSouth Switched Access (SWA) 8XX Toll Free Dialing Ten Digit Screening Service**

8.1 The BellSouth SWA 8XX Toll Free Dialing Ten Digit Screening Service database (8XX SCP Database) is a SCP that contains customer record information and the functionality to provide call-handling instructions for 8XX calls. The 8XX SCP IN software stores data downloaded from the national SMS/8XX database and provides the routing instructions in response to queries from the SSP or tandem. The BellSouth SWA 8XX Toll Free Dialing Ten Digit Screening Service (8XX TFD Service) utilizes the 8XX SCP Database to provide identification and routing of the 8XX calls, based on the ten digits dialed. At Level 3's option, 8XX TFD Service is provided with or without POTS number delivery, dialing number delivery, and other optional complex features as selected by Level 3.

8.2 The 8XX SCP Database is designated to receive and respond to queries using the ANSI Specification of Signaling System Seven (SS7) protocol.

**9 Line Information Database**

9.1 LIDB is a transaction-oriented database accessible through Common Channel Signaling (CCS) networks. For access to LIDB, Level 3 must purchase appropriate signaling links pursuant to Section 10 of this Attachment. LIDB contains records associated with End User Line Numbers and Special Billing Numbers. LIDB accepts queries from other Network Elements and provides appropriate responses. The query originator need not be the owner of LIDB data. LIDB queries include functions such as screening billed numbers that provides the ability to accept Collect or Third Number Billing calls and validation of Telephone Line Number based non-proprietary calling cards. The interface for the LIDB functionality is the interface between BellSouth's CCS network and other CCS networks. LIDB also interfaces to administrative systems.

9.2 Technical Requirements

9.2.1 BellSouth will offer to Level 3 any additional capabilities that are developed for LIDB during the life of this Agreement.

9.2.2 BellSouth shall process Level 3's customer records in LIDB at least at parity with BellSouth customer records, with respect to other LIDB functions. BellSouth shall indicate to Level 3 what additional functions (if any) are performed by LIDB in the BellSouth network.

9.2.3 Within two (2) weeks after a request by Level 3, BellSouth shall provide Level 3 with a list of the customer data items, which Level 3 would have to provide in order to support each required LIDB function. The list shall indicate which data items are essential to LIDB function and which are required only to support certain services. For each data item, the list shall show the data formats, the acceptable values of the data item and the meaning of those values.

9.2.4 BellSouth shall provide LIDB systems for which operating deficiencies that would result in calls being blocked shall not exceed thirty (30) minutes per year.

9.2.5 BellSouth shall provide LIDB systems for which operating deficiencies that would not result in calls being blocked shall not exceed twelve (12) hours per year.

9.2.6 BellSouth shall provide LIDB systems for which the LIDB function shall be in overload no more than twelve (12) hours per year.

9.2.7 All additions, updates and deletions of Level 3 data to the LIDB shall be solely at the direction of Level 3. Such direction from Level 3 will not be required where the addition, update or deletion is necessary to perform standard fraud control measures (e.g., calling card auto-deactivation).

9.2.8 BellSouth shall provide priority updates to LIDB for Level 3 data upon Level 3's request (e.g., to support fraud detection), via password-protected telephone card, facsimile, or electronic mail within one hour of notice from the established BellSouth contact.

9.2.9 BellSouth shall provide LIDB systems such that no more than 0.01% of Level 3 customer records will be missing from LIDB, as measured by Level 3 audits. BellSouth will audit Level 3 records in LIDB against Data Base Administration System (DBAS) to identify record mismatches and provide this data to a designated Level 3 contact person to resolve the status of the records and BellSouth will update system appropriately. BellSouth will refer record of mismatches to Level 3 within one (1) business day of audit. Once reconciled records are received back from Level 3, BellSouth will update LIDB the same business day if less than 500 records are received before 1:00PM Central Time. If more than 500 records are received, BellSouth will contact Level 3 to negotiate a time frame for the updates, not to exceed three business days.

9.2.10 BellSouth shall perform backup and recovery of all of Level 3's data in LIDB including sending to LIDB all changes made since the date of the most recent backup copy, in at least the same time frame BellSouth performs backup and recovery of BellSouth data in LIDB for itself. Currently, BellSouth performs backups of the LIDB for itself on a weekly basis; and when a new software release is scheduled, a backup is performed prior to loading the new release.

9.2.11 BellSouth shall provide Level 3 with LIDB reports of data which are missing or contain errors, as well as any misrouted errors, within a reasonable time period as negotiated between Level 3 and BellSouth.

9.2.12 BellSouth shall prevent any access to or use of Level 3 data in LIDB by BellSouth personnel that are outside of established administrative and fraud control personnel, or by any other Party that is not authorized by Level 3 in writing.

9.2.13 BellSouth shall provide Level 3 performance of the LIDB Data Screening function, which allows a LIDB to completely or partially deny specific query

originators access to LIDB data owned by specific data owners, for Customer Data that is part of an NPA-NXX or RAO-0/1XX wholly or partially owned by Level 3 at least at parity with BellSouth Customer Data. BellSouth shall obtain from Level 3 the screening information associated with LIDB Data Screening of Level 3 data in accordance with this requirement. BellSouth currently does not have LIDB Data Screening capabilities. When such capability is available, BellSouth shall offer it to Level 3 under the BFR/NBR process as set forth in Attachment 11.

9.2.14 BellSouth shall accept queries to LIDB associated with Level 3 customer records and shall return responses in accordance with industry standards.

9.2.15 BellSouth shall provide mean processing time at the LIDB within 0.50 seconds under normal conditions as defined in industry standards.

9.2.16 BellSouth shall provide processing time at the LIDB within 1 second for 99% of all messages under normal conditions as defined in industry standards.

9.3 Interface Requirements

9.3.1 BellSouth shall offer LIDB in accordance with the requirements of this subsection.

9.3.2 The interface to LIDB shall be in accordance with the technical references contained within.

9.3.3 The CCS interface to LIDB shall be the standard interface described herein.

9.3.4 The LIDB Data Base interpretation of the ANSI-TCAP messages shall comply with the technical reference herein. Global Title Translation (GTT) shall be maintained in the signaling network in order to support signaling network routing to the LIDB.

9.3.5 The application of the LIDB rates contained in Exhibit A to this Attachment will be based on a Percent CLEC LIDB Usage (PCLU) factor. Level 3 shall provide BellSouth a PCLU. The PCLU will be applied to determine the percentage of total LIDB usage to be billed to the other Party at local rates. Level 3 shall update its PCLU on the first of January, April, July and October and shall send it to BellSouth to be received no later than thirty (30) calendar days after the first of each such month based on local usage for the past three months ending the last day of December, March, June and September, respectively. Requirements associated with PCLU calculation and reporting shall be as set forth in BellSouth's Jurisdictional Factors Reporting Guide, as it is amended from time to time.

## 10 Signaling

10.1 BellSouth shall offer access to signaling and access to BellSouth's signaling databases subject to compatibility testing and at the rates set forth in this Attachment. BellSouth may provide mediated access to BellSouth signaling

systems and databases. Available signaling elements include signaling links, signal transfer points and service control points. Signaling functionality will be available with both A-link and B-link connectivity.

10.2 **Signaling Link Transport**

10.2.1 Signaling Link Transport is a set of two (2) or four (4) dedicated 56 kbps transmission paths between Level 3 designated Signaling Points of Interconnection that provide appropriate physical diversity.

10.2.2 Technical Requirements

10.2.3 Signaling Link Transport shall consist of full duplex mode 56 kbps transmission paths and shall perform in the following two ways:

10.2.3.1 As an "A-link" Signaling Link Transport is a connection between a switch or SCP and a home Signaling Transfer Point switch pair; and

10.2.3.2 As a "B-link" Signaling Link Transport is a connection between two Signaling Transfer Point switch pairs in different company networks (e.g., between two Signaling Transfer Point switch pairs for two CLECs).

10.2.4 Signaling Link Transport shall consist of two (2) or more signaling link layers as follows:

10.2.4.1 An A-link layer shall consist of two (2) links.

10.2.4.2 A B-link layer shall consist of four (4) links.

10.2.4.3 A signaling link layer shall satisfy interoffice and intraoffice diversity of facilities and equipment, such that:

10.2.4.4 No single failure of facilities or equipment causes the failure of both links in an A-link layer (i.e., the links should be provided on a minimum of two (2) separate physical paths end-to-end); and

10.2.4.5 No two (2) concurrent failures of facilities or equipment shall cause the failure of all four (4) links in a B-link layer (i.e., the links should be provided on a minimum of three separate physical paths end-to-end).

10.2.5 Interface Requirements

10.2.5.1 There shall be a DS1 (1.544 Mbps) interface at Level 3's designated SPOIs. Each 56 kbps transmission path shall appear as a DS0 channel within the DS1 interface.

10.3 **Signaling Transfer Points**

10.3.1 A STP is a signaling network function that includes all of the capabilities provided by the signaling transfer point switches (STPS) and their associated signaling links

that enables the exchange of SS7 messages among and between switching elements, database elements and signaling transfer point switches.

10.3.2 Technical Requirements

10.3.2.1 STPs shall provide access to BellSouth Local Switching or Tandem Switching and to BellSouth Service Control Points/Databases connected to BellSouth SS7 network. STPs also provide access to third-party local or tandem switching and third-party-provided STPs.

10.3.2.2 The connectivity provided by STPs shall fully support the functions of all other Network Elements connected to the BellSouth SS7 network. This includes the use of the BellSouth SS7 network to convey messages that neither originate nor terminate at a signaling end point directly connected to the BellSouth SS7 network (i.e., transit messages). When the BellSouth SS7 network is used to convey transit messages, there shall be no alteration of the Integrated Services Digital Network User Part or Transaction Capabilities Application Part (TCAP) user data that constitutes the content of the message.

10.3.2.3 If a BellSouth tandem switch routes traffic, based on dialed or translated digits, on SS7 trunks between a Level 3 local switch and third party local switch, the BellSouth SS7 network shall convey the TCAP messages that are necessary to provide Call Management features (Automatic Callback, Automatic Recall, and Screening List Editing) between Level 3 local STPs and the STPs that provide connectivity with the third party local switch, even if the third party local switch is not directly connected to BellSouth STPs.

10.3.2.4 STPs shall provide all functions of the SCCP necessary for Class 0 (basic connectionless) service as defined in Telcordia ANSI Interconnection Requirements. This includes GTT and SCCP Management procedures, as specified in ANSI T1.112.4. Where the destination signaling point is a Level 3 or third party local or tandem switching system directly connected to BellSouth SS7 network, BellSouth shall perform final GTT of messages to the destination and SCCP Subsystem Management of the destination. In all other cases, BellSouth shall perform intermediate GTT of messages to a gateway pair of STPs in an SS7 network connected with BellSouth SS7 network and shall not perform SCCP Subsystem Management of the destination. If BellSouth performs final GTT to a Level 3 database, then Level 3 agrees to provide BellSouth with the Destination Point Code for Level 3 database.

10.3.2.5 STPs shall provide all functions of the Operations, Maintenance and Administration Part (OMAP) as specified in applicable industry standard technical references, which may include, where available in BellSouth's network, MTP Routing Verification Test (MRVT) and SCCP Routing Verification Test (SRVT).

10.3.2.6 Where the destination signaling point is a BellSouth local or tandem switching system or database, or is a Level 3 or third party local or tandem switching system

directly connected to the BellSouth SS7 network, STPs shall perform MRVT and SRVT to the destination signaling point. In all other cases, STPs shall perform MRVT and SRVT to a gateway pair of STPs in an SS7 network connected with the BellSouth SS7 network. This requirement may be superseded by the specifications for Internetwork MRVT and SRVT when these become approved ANSI standards and available capabilities of BellSouth STPs.

10.4 **SS7**

10.4.1 When technically feasible and upon request by Level 3, SS7 AIN Access shall be made available in association with switching. SS7 AIN Access is the provisioning of AIN 0.1 triggers in an equipped BellSouth local switch and interconnection of the BellSouth SS7 network with Level 3's SS7 network to exchange TCAP queries and responses with a Level 3 SCP.

10.4.2 SS7 AIN Access shall provide Level 3 SCP access to an equipped BellSouth local switch via interconnection of BellSouth's SS7 and Level 3 SS7 Networks. BellSouth shall offer SS7 AIN Access through its STPs. If BellSouth requires a mediation device on any part of its network specific to this form of access, BellSouth must route its messages in the same manner. The interconnection arrangement shall result in the BellSouth local switch recognizing the Level 3 SCP as at least at parity with BellSouth's SCPs in terms of interfaces, performance and capabilities.

10.4.3 Interface Requirements

10.4.3.1 BellSouth shall provide the following STP options to connect Level 3 or Level 3-designated local switching systems to the BellSouth SS7 network:

10.4.3.1.1 An A-link interface from Level 3 local switching systems; and,

10.4.3.1.2 A B-link interface from Level 3 local STPs.

10.4.3.2 Each type of interface shall be provided by one or more layers of signaling links.

10.4.3.3 The Signaling Point of Interconnection for each link shall be located at a cross-connect element in the CO where the BellSouth STP is located. There shall be a DS1 or higher rate transport interface at each of the SPOIs. Each signaling link shall appear as a DS0 channel within the DS1 or higher rate interface.

10.4.3.4 BellSouth shall provide intraoffice diversity between the SPOI and BellSouth STPs so that no single failure of intraoffice facilities or equipment shall cause the failure of both B-links in a layer connecting to a BellSouth STP.

10.4.3.5 STPs shall provide all functions of the MTP as defined in the applicable industry standard technical references.

10.4.4 Message Screening

10.4.4.1 BellSouth shall set message screening parameters so as to accept valid messages from Level 3 local or tandem switching systems destined to any signaling point within BellSouth's SS7 network where the Level 3 switching system has a valid signaling relationship.

10.4.4.2 BellSouth shall set message screening parameters so as to pass valid messages from Level 3 local or tandem switching systems destined to any signaling point or network accessed through BellSouth's SS7 network where the Level 3 switching system has a valid signaling relationship.

10.4.4.3 BellSouth shall set message screening parameters so as to accept and pass/send valid messages destined to and from Level 3 from any signaling point or network interconnected through BellSouth's SS7 network where the Level 3 SCP has a valid signaling relationship.

10.5 **Service Control Points (SCP)/Databases**

10.5.1 Call Related Databases provide the storage of, access to, and manipulation of information required to offer a particular service and/or capability. BellSouth shall provide access to the following Databases: Local Number Portability, LIDB, Toll Free Number Database, Automatic Location Identification/Data Management System, and Calling Name Database. BellSouth also provides access to Service Creation Environment and Service Management System (SCE/SMS) application databases and Directory Assistance.

10.5.2 A SCP is deployed in a SS7 network that executes service application logic in response to SS7 queries sent to it by a switching system also connected to the SS7 network. Service Management Systems provide operational interfaces to allow for provisioning, administration and maintenance of subscriber data and service application data stored in SCPs.

10.5.3 Technical Requirements for SCPs/Databases

10.5.3.1 BellSouth shall provide physical access to SCPs through the SS7 network and protocols with TCAP as the application layer protocol.

10.5.3.2 BellSouth shall provide physical interconnection to databases via industry standard interfaces and protocols (e.g. SS7, ISDN and X.25).

10.5.3.3 The reliability of interconnection options shall be consistent with requirements for diversity and survivability.

10.6 **Local Number Portability Database**

10.6.1 The Permanent Number Portability (PNP) database supplies routing numbers for calls involving numbers that have been ported from one local service provider to another. BellSouth agrees to provide access to the PNP database at rates, terms

and conditions as set forth by BellSouth and in accordance with an effective FCC or Commission directive.

10.7 **SS7 Network Interconnection**

10.7.1 SS7 Network Interconnection is the interconnection of Level 3 local signaling transfer point switches or Level 3 local or tandem switching systems with BellSouth signaling transfer point switches. This interconnection provides connectivity that enables the exchange of SS7 messages among BellSouth switching systems and databases, Level 3 local or tandem switching systems, and other third-party switching systems directly connected to the BellSouth SS7 network.

10.7.2 The connectivity provided by SS7 Network Interconnection shall fully support the functions of BellSouth switching systems and databases and Level 3 or other third-party switching systems with A-link access to the BellSouth SS7 network.

10.7.3 If traffic is routed based on dialed or translated digits between a Level 3 local switching system and a BellSouth or other third-party local switching system, either directly or via a BellSouth tandem switching system, then it is a requirement that the BellSouth SS7 network convey via SS7 Network Interconnection the TCAP messages that are necessary to provide Call Management services (Automatic Callback, Automatic Recall, and Screening List Editing) between the Level 3 local signaling transfer point switches and BellSouth or other third-party local switch.

10.7.4 SS7 Network Interconnection shall provide:

10.7.4.1 Signaling Data Link functions, as specified in ANSI T1.111.2;

10.7.4.2 Signaling Link functions, as specified in ANSI T1.111.3; and

10.7.4.3 Signaling Network Management functions, as specified in ANSI T1.111.4.

10.7.5 SS7 Network Interconnection shall provide all functions of the SCCP necessary for Class 0 (basic connectionless) service as specified in ANSI T1.112. This includes GTT and SCCP Management procedures as specified in ANSI T1.112.4. Where the destination signaling point is a BellSouth switching system or DB, or is another third-party local or tandem switching system directly connected to the BellSouth SS7 network, SS7 Network Interconnection shall include final GTT of messages to the destination and SCCP Subsystem Management of the destination. Where the destination signaling point is a Level 3 local or tandem switching system, SS7 Network Interconnection shall include intermediate GTT of messages to a gateway pair of Level 3 local STPs and shall not include SCCP Subsystem Management of the destination.

10.7.6 SS7 Network Interconnection shall provide all functions of the Integrated Services Digital Network User Part as specified in ANSI T1.113.

10.7.7 SS7 Network Interconnection shall provide all functions of the TCAP as specified in ANSI T1.114.

10.7.8 If Internetwork MRVT and SRVT become approved ANSI standards and available capabilities of BellSouth STPs, SS7 Network Interconnection may provide these functions of the OMAP.

10.7.9 Interface Requirements

10.7.9.1 The following SS7 Network Interconnection interface options are available to connect Level 3 or Level 3-designated local or tandem switching systems or signaling transfer point switches to the BellSouth SS7 network:

10.7.9.1.1 A-link interface from Level 3 local or tandem switching systems; and

10.7.9.1.2 B-link interface from Level 3 STPs.

10.7.9.2 The Signaling Point of Interconnection for each link shall be located at a cross-connect element in the central office where the BellSouth STP is located. There shall be a DS1 or higher rate transport interface at each of the Signaling Points of interconnection. Each signaling link shall appear as a DS0 channel within the DS1 or higher rate interface.

10.7.9.3 BellSouth shall provide intraoffice diversity between the Signaling Points of Interconnection and the BellSouth STP, so that no single failure of intraoffice facilities or equipment shall cause the failure of both B-links in a layer connecting to a BellSouth STP.

10.7.9.4 The protocol interface requirements for SS7 Network Interconnection include the MTP, ISDNUP, SCCP, and TCAP. These protocol interfaces shall conform to the applicable industry standard technical references.

10.7.9.5 BellSouth shall set message screening parameters to accept messages from Level 3 local or tandem switching systems destined to any signaling point in the BellSouth SS7 network with which the Level 3 switching system has a valid signaling relationship.

## 11 Automatic Location Identification/Data Management System (ALI/DMS)

11.1 The ALI/DMS Database contains End User information (including name, address, telephone information, and sometimes special information from the local service provider or End User) used to determine to which PSAP to route the call. The ALI/DMS database is used to provide enhanced routing flexibility for E911. Level 3 will be required to provide BellSouth daily updates to E911 database. Level 3 shall also be responsible for providing BellSouth with complete and accurate data

for submission to the 911/E911 database for the purpose of providing 911/E911 service to its End Users.

11.2 Technical Requirements

11.2.1 BellSouth shall provide Level 3 the capability of providing updates to the ALI/DMS database. BellSouth shall provide error reports from the ALI/DMS database to Level 3 after Level 3 provides End User information for input into the ALI/DMS database.

11.2.2 Level 3 shall conform to the National Emergency Number Association (NENA) recommended standards for LNP and updating the ALI/DMS database.

## 12 Calling Name Database Service

12.1 CNAM is the ability to associate a name with the calling party number, allowing the End User (to which a call is being terminated) to view the calling party's name before the call is answered. The calling party's information is accessed by queries launched to the CNAM database. This service also provides Level 3 the opportunity to load and store its subscriber names in the BellSouth CNAM SCPs.

12.2 Level 3 shall submit to BellSouth a notice of its intent to access and utilize BellSouth CNAM Database Services. Said notice shall be in writing no less than sixty (60) calendar days prior to Level 3's access to BellSouth's CNAM Database Services and shall be addressed to Level 3's Local Contract Manager.

12.3 BellSouth's provision of CNAM Database Services to Level 3 requires interconnection from Level 3 to BellSouth CNAM SCPs. Such interconnections shall be established pursuant to Attachment 3 of this Agreement.

12.4 In order to formulate a CNAM query to be sent to the BellSouth CNAM SCP, Level 3 shall provide its own CNAM SSP. Level 3's CNAM SSPs must be compliant with TR-NWT-001188, "CLASS Calling Name Delivery Generic Requirements".

12.5 If Level 3 elects to access the BellSouth CNAM SCP via a third party CCS7 transport provider, the third party CCS7 provider shall interconnect with the BellSouth CCS7 network according to BellSouth's Common Channel Signaling Interconnection Guidelines and Telcordia's CCS Network Interface Specification document, TR-TSV-000905. In addition, the third party provider shall establish CCS7 interconnection at the BellSouth Local Signal Transfer Points (LSTPs) serving the BellSouth CNAM SCPs that Level 3 desires to query.

12.6 If Level 3 queries the BellSouth CNAM SCP via a third party national SS7 transport provider, the third party SS7 provider shall interconnect with the BellSouth CCS7 network according to BellSouth's Common Channel Signaling Interconnection Guidelines and Telcordia's CCS Network Interface Specification document, TR-TSV-000905. In addition, the third party provider shall establish

SS7 interconnection at one or more of the BellSouth Gateway STPs. The payment of all costs associated with the transport of SS7 signals via a third party will be established by mutual agreement of the Parties and this Agreement shall be amended in accordance with modification of the General Terms and Conditions incorporated herein by this reference.

12.7 The mechanism to be used by Level 3 for initial CNAM record load and/or updates shall be determined by mutual agreement. The initial load and all updates shall be provided by Level 3 in the BellSouth specified format and shall contain records for every working telephone number that can originate phone calls. It is the responsibility of Level 3 to provide accurate information to BellSouth on a current basis.

12.8 Updates to the SMS shall occur no less than once a week, reflect service order activity affecting either name or telephone number, and involve only record additions, deletions or changes.

12.9 Level 3 CNAM records provided for storage in the BellSouth CNAM SCP shall be available, on a SCP query basis only, to all Parties querying the BellSouth CNAM SCP. Further, CNAM service shall be provided by each Party consistent with state and/or federal regulation.

## 13 Service Creation Environment and Service Management System (SCE/SMS) Advanced Intelligent Network Access

13.1 BellSouth's SCE/SMS AIN Access shall provide Level 3 the capability to create service applications in a BellSouth SCE and deploy those applications in a BellSouth SMS to a BellSouth SCP.

13.2 BellSouth's SCE/SMS AIN Access shall provide access to SCE hardware, software, testing and technical support (e.g., help desk, system administrator) resources available to Level 3. Training, documentation, and technical support will address use of SCE and SMS access and administrative functions but will not include support for the creation of a specific service application.

13.3 BellSouth SCP shall partition and protect Level 3 service logic and data from unauthorized access.

13.4 When Level 3 selects SCE/SMS AIN Access, BellSouth shall provide training, documentation, and technical support to enable Level 3 to use BellSouth's SCE/SMS AIN Access to create and administer applications.

13.5 Level 3 access will be provided via remote data connection (e.g., dial-in, ISDN).

13.6 BellSouth shall allow Level 3 to download data forms and/or tables to BellSouth SCP via BellSouth SMS without intervention from BellSouth.

## 14 Operational Support Systems

14.1 BellSouth has developed and made available electronic interfaces by which Level 3 may submit LSRs electronically.

14.2 LSRs submitted by means of one of these electronic interfaces will incur an OSS electronic ordering charge. An individual LSR will be identified for billing purposes by its Purchase Order Number (PON). LSRs submitted by means other than one of these interactive interfaces (mail, fax, courier, etc.) will incur a manual order charge. All OSS charges are specified in Exhibit A of this Attachment.

14.3 Denial/Restoral OSS Charge

14.3.1 In the event Level 3 provides a list of customers to be denied and restored, rather than an LSR, each location on the list will require a separate PON and therefore will be billed as one LSR per location.

14.4 Cancellation OSS Charge

14.4.1 Level 3 will incur an OSS charge for an accepted LSR that is later canceled.

14.5 Supplements or clarifications to a previously billed LSR will not incur another OSS charge.

14.6 Network Elements and Other Services Manual Additive

14.6.1 The Commissions in some states have ordered per element manual additive nonrecurring charges (NRC) for Network Elements and Other Services ordered by means other than one of the interactive interfaces. These ordered Network Elements and Other Services manual additive NRCs will apply in these states, rather than the charge per LSR. The per element charges are listed in Exhibit A.

| UNBUNDLED NETWORK ELEMENTS - Alabama | | | | | | | | | | | | | | | Attachment: 2 | | Exhibit: A | |
|---|---|---|---|---|---|---|---|---|---|---|---|---|---|---|---|---|---|---|
| CATEGORY | RATE ELEMENTS | Interim | Zone | BCS | USOC | RATES ($) | | | | | Svc Order Submitted Elec per LSR | Svc Order Submitted Manually per LSR | Incremental Charge - Manual Svc Order vs. Electronic-1st | Incremental Charge - Manual Svc Order vs. Electronic-Add'l | Incremental Charge - Manual Svc Order vs. Electronic-Disc 1st | Incremental Charge - Manual Svc Order vs. Electronic-Disc Add'l |
| | | | | | | Rec | Nonrecurring | | Nonrecurring Disconnect | | OSS Rates ($) | | | | | |
| | | | | | | | First | Add'l | First | Add'l | SOMEC | SOMAN | SOMAN | SOMAN | SOMAN | SOMAN |
| | The "Zone" shown in the sections for stand-alone loops or loops as part of a combination refers to Geographically Deaveraged UNE Zones. To view Geographically Deaveraged UNE Zone Designations by Central Office, refer to internet Website: http://www.interconnection.bellsouth.com/become_a_clec/html/interconnection.htm | | | | | | | | | | | | | | | |
| OPERATIONAL SUPPORT SYSTEMS (OSS) - "REGIONAL RATES" | | | | | | | | | | | | | | | | |
| | NOTE: (1) CLEC should contact its contract negotiator if it prefers the "state specific" OSS charges as ordered by the State Commissions. The OSS charges currently contained in this rate exhibit are the BellSouth "regional" service ordering charges. CLEC may elect either the state specific Commission ordered rates for the service ordering charges, or CLEC may elect the regional service ordering charge, however, CLEC can not obtain a mixture of the two regardless if CLEC has a interconnection contract established in each of the 9 states. | | | | | | | | | | | | | | | |
| | NOTE: (2) Any element that can be ordered electronically will be billed according to the SOMEC rate listed in this category. Please refer to BellSouth's Local Ordering Handbook (LOH) to determine if a product can be ordered electronically. For those elements that cannot be ordered electronically at present per the LOH, the listed SOMEC rate in this category reflects the charge that would be billed to a CLEC once electronic ordering capabilities come on-line for that element. Otherwise, the manual ordering charge, SOMAN, will be applied to a CLECs bill when it submits an LSR to BellSouth. | | | | | | | | | | | | | | | |
| | OSS - Electronic Service Order Charge, Per Local Service Request (LSR) - UNE Only | | | | SOMEC | | 3.50 | 0.00 | 3.50 | 0.00 | | | | | | |
| | OSS - Manual Service Order Charge, Per Local Service Request (LSR) - UNE Only | | | | SOMAN | | 15.66 | 0.00 | 1.97 | 0.00 | | | | | | |
| UNE SERVICE DATE ADVANCEMENT CHARGE | | | | | | | | | | | | | | | | |
| | NOTE: The Expedite charge will be maintained commensurate with BellSouth's FCC No.1 Tariff, Section 5 as applicable. | | | | | | | | | | | | | | | |
| | UNE Expedite Charge per Circuit or Line Assignable USOC, per Day | | | UAL, UEANL, UCL, UEF, UDF, UEQ, UDL, UENTW, UDN, UEA, UHL, ULC, USL, U1T12, U1T48, U1TD1, U1TD3, U1TDX, U1TO3, U1TS1, U1TVX, UC1BC, UC1BL, UC1CC, UC1CL, UC1DC, UC1DL, UC1EC, UC1EL, UC1FC, UC1FL, UC1GC, UC1GL, UC1HC, UC1HL, UDL12, UDL48, UDLO3, UDLSX, UE3, ULD12, ULD48, ULDD1, ULDD3, ULDDX, ULDO3, ULDS1, ULDVX, UNC1X, UNC3X, UNCDX, UNCNX, UNCSX, UNCVX, UNLD1, UNLD3, UXTD1, UXTD3, UXTS1, U1TUC, U1TUD, U1TUB, U1TUA | SDASP | | 200.00 | | | | | | | | | |
| UNBUNDLED EXCHANGE ACCESS LOOP | | | | | | | | | | | | | | | | |
| | 2-WIRE ANALOG VOICE GRADE LOOP | | | | | | | | | | | | | | | |
| | 2-Wire Analog Voice Grade Loop - Service Level 1- Zone 1 | | 1 | UEANL | UEAL2 | 12.58 | 37.81 | 17.56 | 23.49 | 5.30 | | | | | | |
| | 2-Wire Analog Voice Grade Loop - Service Level 1- Zone 2 | | 2 | UEANL | UEAL2 | 21.05 | 37.81 | 17.56 | 23.49 | 5.30 | | | | | | |
| | 2-Wire Analog Voice Grade Loop - Service Level 1- Zone 3 | | 3 | UEANL | UEAL2 | 34.34 | 37.81 | 17.56 | 23.49 | 5.30 | | | | | | |
| | 2-Wire Analog Voice Grade Loop - Service Level 1- Zone 1 | | 1 | UEANL | UEASL | 12.58 | 37.81 | 17.56 | 23.49 | 5.30 | | | | | | |
| | 2-Wire Analog Voice Grade Loop - Service Level 1- Zone 2 | | 2 | UEANL | UEASL | 21.05 | 37.81 | 17.56 | 23.49 | 5.30 | | | | | | |
| | 2-Wire Analog Voice Grade Loop - Service Level 1- Zone 3 | | 3 | UEANL | UEASL | 34.34 | 37.81 | 17.56 | 23.49 | 5.30 | | | | | | |
| | Unbundled Miscellaneous Rate Element, Tag Loop at End User Premise | | | UEANL | URETL | | 8.33 | 0.83 | | | | | | | | |
| | Loop Testing - Basic 1st Half Hour | | | UEANL | URET1 | | 34.16 | 34.16 | | | | | | | | |
| | Loop Testing - Basic Additional Half Hour | | | UEANL | URETA | | 19.85 | 19.85 | | | | | | | | |

| UNBUNDLED NETWORK ELEMENTS - Alabama | | | | | | | | | | | | | | Attachment: 2 | | Exhibit: A | |
|---|---|---|---|---|---|---|---|---|---|---|---|---|---|---|---|---|---|
| CATEGORY | | RATE ELEMENTS | Interim | Zone | BCS | USOC | RATES ($) | | | | | Svc Order Submitted Elec per LSR | Svc Order Submitted Manually per LSR | Incremental Charge - Manual Svc Order vs. Electronic-1st | Incremental Charge - Manual Svc Order vs. Electronic-Add'l | Incremental Charge - Manual Svc Order vs. Electronic-Disc 1st | Incremental Charge - Manual Svc Order vs. Electronic-Disc Add'l |
| | | | | | | | Rec | Nonrecurring | | Nonrecurring Disconnect | | OSS Rates ($) | | | | | |
| | | | | | | | | First | Add'l | First | Add'l | SOMEC | SOMAN | SOMAN | SOMAN | SOMAN | SOMAN |
| | | CLEC to CLEC Conversion Charge Without Outside Dispatch (UVL-SL1) | | | UEANL | UREWO | | 15.78 | 8.94 | | | | | | | | |
| | | Unbundled Voice Loop, Non-Design Voice Loop, billing for BST providing make-up (Engineering Information - E.I.) | | | UEANL | UEANM | | 13.44 | | | | | | | | | |
| | | Manual Order Coordination for UVL-SL1s (per loop) | | | UEANL | UEAMC | | 8.15 | 8.15 | | | | | | | | |
| | | Order Coordination for Specified Conversion Time for UVL-SL1 (per LSR) | | | UEANL | OCOSL | | 18.09 | | | | | | | | | |
| | 2-WIRE Unbundled COPPER LOOP | | | | | | | | | | | | | | | | |
| | | 2-Wire Unbundled Copper Loop - Non-Designed Zone 1 | | 1 | UEQ | UEQ2X | 11.20 | 34.14 | 15.10 | 21.25 | 4.15 | | | | | | |
| | | 2 Wire Unbundled Copper Loop - Non-Designed - Zone 2 | | 2 | UEQ | UEQ2X | 13.27 | 34.14 | 15.10 | 21.25 | 4.15 | | | | | | |
| | | 2 Wire Unbundled Copper Loop - Non-Designed - Zone 3 | | 3 | UEQ | UEQ2X | 15.07 | 34.14 | 15.10 | 21.25 | 4.15 | | | | | | |
| | | Unbundled Miscellaneous Rate Element, Tag Loop at End User Premise | | | UEQ | URETL | | 8.33 | 0.83 | | | | | | | | |
| | | Manual Order Coordination 2 Wire Unbundled Copper Loop - Non-Designed (per loop) | | | UEQ | USBMC | | 8.15 | | | | | | | | | |
| | | Unbundled Copper Loop, Non-Design Copper Loop, billing for BST providing make-up (Engineering Information - E.I.) | | | UEQ | UEQMU | | 13.44 | | | | | | | | | |
| | | Loop Testing - Basic 1st Half Hour | | | UEQ | URET1 | | 34.16 | 34.16 | | | | | | | | |
| | | Loop Testing - Basic Additional Half Hour | | | UEQ | URETA | | 19.85 | 19.85 | | | | | | | | |
| | | CLEC to CLEC Conversion Charge Without Outside Dispatch (UCL-ND) | | | UEQ | UREWO | | 14.27 | 7.43 | | | | | | | | |
| UNBUNDLED EXCHANGE ACCESS LOOP | | | | | | | | | | | | | | | | | |
| | 2-WIRE ANALOG VOICE GRADE LOOP | | | | | | | | | | | | | | | | |
| | | 2 Wire Analog Voice Grade Loop-Service Level 1-Line Splitting-Zone 1 | | 1 | UEPSR UEPSB | UEALS | 12.58 | 37.81 | 17.56 | 23.49 | 5.30 | | | | | | |
| | | 2 Wire Analog Voice Grade Loop-Service Level 1-Line Splitting-Zone 1 | | 1 | UEPSR UEPSB | UEABS | 12.58 | 37.81 | 17.56 | 23.49 | 5.30 | | | | | | |
| | | 2 Wire Analog Voice Grade Loop- Service Level 1-Line Splitting-Zone 2 | | 2 | UEPSR UEPSB | UEALS | 21.05 | 37.81 | 17.56 | 23.49 | 5.30 | | | | | | |
| | | 2 Wire Analog Voice Grade Loop- Service Level 1-Line Splitting-Zone 2 | | 2 | UEPSR UEPSB | UEABS | 21.05 | 37.81 | 17.56 | 23.49 | 5.30 | | | | | | |
| | | 2 Wire Analog Voice Grade Loop-Service Level 1-Line Splitting-Zone 3 | | 3 | UEPSR UEPSB | UEALS | 34.34 | 37.81 | 17.56 | 23.49 | 5.30 | | | | | | |
| | | 2 Wire Analog Voice Grade Loop-Service Level 1-Line Splitting-Zone 3 | | 3 | UEPSR UEPSB | UEABS | 34.34 | 37.81 | 17.56 | 23.49 | 5.30 | | | | | | |
| UNBUNDLED EXCHANGE ACCESS LOOP | | | | | | | | | | | | | | | | | |
| | 2-WIRE ANALOG VOICE GRADE LOOP | | | | | | | | | | | | | | | | |
| | | 2-Wire Analog Voice Grade Loop - Service Level 2 w/Loop or Ground Start Signaling - Zone 1 | | 1 | UEA | UEAL2 | 14.38 | 88.00 | 55.00 | 47.24 | 7.44 | | | | | | |
| | | 2-Wire Analog Voice Grade Loop - Service Level 2 w/Loop or Ground Start Signaling - Zone 2 | | 2 | UEA | UEAL2 | 22.85 | 88.00 | 55.00 | 47.24 | 7.44 | | | | | | |
| | | 2-Wire Analog Voice Grade Loop - Service Level 2 w/Loop or Ground Start Signaling - Zone 3 | | 3 | UEA | UEAL2 | 36.14 | 88.00 | 55.00 | 47.24 | 7.44 | | | | | | |
| | | Order Coordination for Specified Conversion Time (per LSR) | | | UEA | OCOSL | | 18.09 | | | | | | | | | |
| | | 2-Wire Analog Voice Grade Loop - Service Level 2 w/Reverse Battery Signaling - Zone 1 | | 1 | UEA | UEAR2 | 14.38 | 88.00 | 55.00 | 47.24 | 7.44 | | | | | | |
| | | 2-Wire Analog Voice Grade Loop - Service Level 2 w/Reverse Battery Signaling - Zone 2 | | 2 | UEA | UEAR2 | 22.85 | 88.00 | 55.00 | 47.24 | 7.44 | | | | | | |
| | | 2-Wire Analog Voice Grade Loop - Service Level 2 w/Reverse Battery Signaling - Zone 3 | | 3 | UEA | UEAR2 | 36.14 | 88.00 | 55.00 | 47.24 | 7.44 | | | | | | |
| | | Order Coordination for Specified Conversion Time (per LSR) | | | UEA | OCOSL | | 18.09 | | | | | | | | | |
| | | CLEC to CLEC Conversion Charge without outside dispatch | | | UEA | UREWO | | 87.72 | 36.36 | | | | | | | | |
| | | Loop Tagging - Service Level 2 (SL2) | | | UEA | URETL | | 11.21 | 1.10 | | | | | | | | |
| | 4-WIRE ANALOG VOICE GRADE LOOP | | | | | | | | | | | | | | | | |
| | | 4-Wire Analog Voice Grade Loop - Zone 1 | | 1 | UEA | UEAL4 | 25.34 | 131.97 | 94.51 | 59.14 | 14.50 | | | | | | |
| | | 4-Wire Analog Voice Grade Loop - Zone 2 | | 2 | UEA | UEAL4 | 38.58 | 131.97 | 94.51 | 59.14 | 14.50 | | | | | | |
| | | 4-Wire Analog Voice Grade Loop - Zone 3 | | 3 | UEA | UEAL4 | 60.02 | 131.97 | 94.51 | 59.14 | 14.50 | | | | | | |
| | | Order Coordination for Specified Conversion Time (per LSR) | | | UEA | OCOSL | | 18.09 | | | | | | | | | |
| | | CLEC to CLEC Conversion Charge without outside dispatch | | | UEA | UREWO | | 87.72 | 36.36 | | | | | | | | |

## UNBUNDLED NETWORK ELEMENTS - Alabama

| CATEGORY | RATE ELEMENTS | Interim | Zone | BCS | USOC | RATES ($) | | | | | Svc Order Submitted Elec per LSR | Svc Order Submitted Manually per LSR | Attachment: 2 Incremental Charge - Manual Svc Order vs. Electronic- 1st | Attachment: 2 Incremental Charge - Manual Svc Order vs. Electronic- Add'l | Exhibit: A Incremental Charge - Manual Svc Order vs. Electronic- Disc 1st | Exhibit: A Incremental Charge - Manual Svc Order vs. Electronic- Disc Add'l |
|---|---|---|---|---|---|---|---|---|---|---|---|---|---|---|---|---|
| | | | | | | Rec | Nonrecurring | | Nonrecurring Disconnect | | OSS Rates ($) | | | | | |
| | | | | | | | First | Add'l | First | Add'l | SOMEC | SOMAN | SOMAN | SOMAN | SOMAN | SOMAN |
| 2-WIRE ISDN DIGITAL GRADE LOOP | | | | | | | | | | | | | | | | |
| | 2-Wire ISDN Digital Grade Loop - Zone 1 | | 1 | UDN | U1L2X | 21.88 | 117.24 | 79.77 | 52.88 | 10.54 | | | | | | |
| | 2-Wire ISDN Digital Grade Loop - Zone 2 | | 2 | UDN | U1L2X | 32.85 | 117.24 | 79.77 | 52.88 | 10.54 | | | | | | |
| | 2-Wire ISDN Digital Grade Loop - Zone 3 | | 3 | UDN | U1L2X | 48.55 | 117.24 | 79.77 | 52.88 | 10.54 | | | | | | |
| | Order Coordination For Specified Conversion Time (per LSR) | | | UDN | OCOSL | | 18.09 | | | | | | | | | |
| | CLEC to CLEC Conversion Charge without outside dispatch | | | UDN | UREWO | | 91.63 | 44.16 | | | | | | | | |
| 2-WIRE ASYMMETRICAL DIGITAL SUBSCRIBER LINE (ADSL) COMPATIBLE LOOP | | | | | | | | | | | | | | | | |
| | 2 Wire Unbundled ADSL Loop including manual service inquiry & facility reservation - Zone 1 | | 1 | UAL | UAL2X | 11.01 | 110.00 | 68.00 | 47.24 | 7.44 | | | | | | |
| | 2 Wire Unbundled ADSL Loop including manual service inquiry & facility reservation - Zone 2 | | 2 | UAL | UAL2X | 12.73 | 110.00 | 68.00 | 47.24 | 7.44 | | | | | | |
| | 2 Wire Unbundled ADSL Loop including manual service inquiry & facility reservation - Zone 3 | | 3 | UAL | UAL2X | 14.30 | 110.00 | 68.00 | 47.24 | 7.44 | | | | | | |
| | Order Coordination for Specified Conversion Time (per LSR) | | | UAL | OCOSL | | 18.09 | | | | | | | | | |
| | 2 Wire Unbundled ADSL Loop without manual service inquiry & facility reservaton - Zone 1 | | 1 | UAL | UAL2W | 11.01 | 90.00 | 57.00 | 47.24 | 7.44 | | | | | | |
| | 2 Wire Unbundled ADSL Loop without manual service inquiry & facility reservaton - Zone 2 | | 2 | UAL | UAL2W | 12.73 | 90.00 | 57.00 | 47.24 | 7.44 | | | | | | |
| | 2 Wire Unbundled ADSL Loop without manual service inquiry & facility reservaton - Zone 3 | | 3 | UAL | UAL2W | 14.30 | 90.00 | 57.00 | 47.24 | 7.44 | | | | | | |
| | Order Coordination for Specified Conversion Time (per LSR) | | | UAL | OCOSL | | 18.09 | | | | | | | | | |
| | CLEC to CLEC Conversion Charge without outside dispatch | | | UAL | UREWO | | 86.20 | 40.40 | | | | | | | | |
| 2-WIRE HIGH BIT RATE DIGITAL SUBSCRIBER LINE (HDSL) COMPATIBLE LOOP | | | | | | | | | | | | | | | | |
| | 2 Wire Unbundled HDSL Loop including manual service inquiry & facility reservation - Zone 1 | | 1 | UHL | UHL2X | 8.74 | 110.00 | 68.00 | 47.24 | 7.44 | | | | | | |
| | 2 Wire Unbundled HDSL Loop including manual service inquiry & facility reservation - Zone 2 | | 2 | UHL | UHL2X | 10.17 | 110.00 | 68.00 | 47.24 | 7.44 | | | | | | |
| | 2 Wire Unbundled HDSL Loop including manual service inquiry & facility reservation - Zone 3 | | 3 | UHL | UHL2X | 11.44 | 110.00 | 68.00 | 47.24 | 7.44 | | | | | | |
| | Order Coordination for Specified Conversion Time (per LSR) | | | UHL | OCOSL | | 18.09 | | | | | | | | | |
| | 2 Wire Unbundled HDSL Loop without manual service inquiry and facility reservation - Zone 1 | | 1 | UHL | UHL2W | 8.74 | 90.00 | 57.00 | 47.24 | 7.44 | | | | | | |
| | 2 Wire Unbundled HDSL Loop without manual service inquiry and facility reservation - Zone 2 | | 2 | UHL | UHL2W | 10.17 | 90.00 | 57.00 | 47.24 | 7.44 | | | | | | |
| | 2 Wire Unbundled HDSL Loop without manual service inquiry and facility reservation - Zone 3 | | 3 | UHL | UHL2W | 11.44 | 90.00 | 57.00 | 47.24 | 7.44 | | | | | | |
| | Order Coordination for Specified Conversion Time (per LSR) | | | UHL | OCOSL | | 18.09 | | | | | | | | | |
| | CLEC to CLEC Conversion Charge without outside dispatch | | | UHL | UREWO | | 86.14 | 40.40 | | | | | | | | |
| 4-WIRE HIGH BIT RATE DIGITAL SUBSCRIBER LINE (HDSL) COMPATIBLE LOOP | | | | | | | | | | | | | | | | |
| | 4 Wire Unbundled HDSL Loop including manual service inquiry and facility reservation - Zone 1 | | 1 | UHL | UHL4X | 13.95 | 148.36 | 68.00 | 51.70 | 9.73 | | | | | | |
| | 4-Wire Unbundled HDSL Loop including manual service inquiry and facility reservation - Zone 2 | | 2 | UHL | UHL4X | 15.56 | 148.36 | 68.00 | 51.70 | 9.73 | | | | | | |
| | 4-Wire Unbundled HDSL Loop including manual service inquiry and facility reservation - Zone 3 | | 3 | UHL | UHL4X | 15.25 | 148.36 | 68.00 | 51.70 | 9.73 | | | | | | |
| | Order Coordination for Specified Conversion Time (per LSR) | | | UHL | OCOSL | | 18.09 | | | | | | | | | |
| | 4-Wire Unbundled HDSL Loop without manual service inquiry and facility reservation - Zone 1 | | 1 | UHL | UHL4W | 13.95 | 94.00 | 57.00 | 51.70 | 9.73 | | | | | | |
| | 4-Wire Unbundled HDSL Loop without manual service inquiry and facility reservation - Zone 2 | | 2 | UHL | UHL4W | 15.56 | 94.00 | 57.00 | 51.70 | 9.73 | | | | | | |
| | 4-Wire Unbundled HDSL Loop without manual service inquiry and facility reservation - Zone 3 | | 3 | UHL | UHL4W | 15.25 | 94.00 | 57.00 | 51.70 | 9.73 | | | | | | |
| | Order Coordination for Specified Conversion Time (per LSR) | | | UHL | OCOSL | | 18.09 | | | | | | | | | |
| | CLEC to CLEC Conversion Charge without outside dispatch | | | UHL | UREWO | | 86.14 | 40.40 | | | | | | | | |
| 4-WIRE DS1 DIGITAL LOOP | | | | | | | | | | | | | | | | |
| | 4-Wire DS1 Digital Loop - Zone 1 | | 1 | USL | USLXX | 82.55 | 252.47 | 157.54 | 44.70 | 11.71 | | | | | | |
| | 4-Wire DS1 Digital Loop - Zone 2 | | 2 | USL | USLXX | 154.18 | 252.47 | 157.54 | 44.70 | 11.71 | | | | | | |
| | 4-Wire DS1 Digital Loop - Zone 3 | | 3 | USL | USLXX | 314.52 | 252.47 | 157.54 | 44.70 | 11.71 | | | | | | |
| | Order Coordination for Specified Conversion Time (per LSR) | | | USL | OCOSL | | 18.09 | | | | | | | | | |

## UNBUNDLED NETWORK ELEMENTS - Alabama

| CATEGORY | RATE ELEMENTS | Interim | Zone | BCS | USOC | RATES ($) | | | | | Svc Order Submitted Elec per LSR | Svc Order Submitted Manually per LSR | Attachment: 2 | | Exhibit: A | |
|---|---|---|---|---|---|---|---|---|---|---|---|---|---|---|---|---|
| | | | | | | | | | | | | | Incremental Charge - Manual Svc Order vs. Electronic- 1st | Incremental Charge - Manual Svc Order vs. Electronic- Add'l | Incremental Charge - Manual Svc Order vs. Electronic- Disc 1st | Incremental Charge - Manual Svc Order vs. Electronic- Disc Add'l |
| | | | | | | Rec | Nonrecurring | | Nonrecurring Disconnect | | OSS Rates ($) | | | | | |
| | | | | | | | First | Add'l | First | Add'l | SOMEC | SOMAN | SOMAN | SOMAN | SOMAN | SOMAN |
| | CLEC to CLEC Conversion Charge without outside dispatch | | | USL | UREWO | | 101.09 | 43.05 | | | | | | | | |
| 4-WIRE 19.2, 56 OR 64 KBPS DIGITAL GRADE LOOP | | | | | | | | | | | | | | | | |
| | 4 Wire Unbundled Digital 19.2 Kbps | | 1 | UDL | UDL19 | 26.09 | 126.27 | 88.80 | 59.14 | 14.50 | | | | | | |
| | 4 Wire Unbundled Digital 19.2 Kbps | | 2 | UDL | UDL19 | 35.95 | 126.27 | 88.80 | 59.14 | 14.50 | | | | | | |
| | 4 Wire Unbundled Digital 19.2 Kbps | | 3 | UDL | UDL19 | 37.88 | 126.27 | 88.80 | 59.14 | 14.50 | | | | | | |
| | 4 Wire Unbundled Digital Loop 56 Kbps - Zone 1 | | 1 | UDL | UDL56 | 26.09 | 126.27 | 88.80 | 59.14 | 14.50 | | | | | | |
| | 4 Wire Unbundled Digital Loop 56 Kbps - Zone 2 | | 2 | UDL | UDL56 | 35.95 | 126.27 | 88.80 | 59.14 | 14.50 | | | | | | |
| | 4 Wire Unbundled Digital Loop 56 Kbps - Zone 3 | | 3 | UDL | UDL56 | 37.88 | 126.27 | 88.80 | 59.14 | 14.50 | | | | | | |
| | Order Coordination for Specified Conversion Time (per LSR) | | | UDL | OCOSL | | 18.09 | | | | | | | | | |
| | 4 Wire Unbundled Digital Loop 64 Kbps - Zone 1 | | 1 | UDL | UDL64 | 26.09 | 126.27 | 88.80 | 59.14 | 14.50 | | | | | | |
| | 4 Wire Unbundled Digital Loop 64 Kbps - Zone 2 | | 2 | UDL | UDL64 | 35.95 | 126.27 | 88.80 | 59.14 | 14.50 | | | | | | |
| | 4 Wire Unbundled Digital Loop 64 Kbps - Zone 3 | | 3 | UDL | UDL64 | 37.88 | 126.27 | 88.80 | 59.14 | 14.50 | | | | | | |
| | Order Coordination for Specified Conversion Time (per LSR) | | | UDL | OCOSL | | 18.09 | | | | | | | | | |
| | CLEC to CLEC Conversion Charge without outside dispatch | | | UDL | UREWO | | 102.13 | 49.75 | | | | | | | | |
| 2-WIRE Unbundled COPPER LOOP | | | | | | | | | | | | | | | | |
| | 2-Wire Unbundled Copper Loop-Designed including manual service inquiry & facility reservation - Zone 1 | | 1 | UCL | UCLPB | 11.01 | 112.46 | 65.30 | 47.24 | 7.44 | | | | | | |
| | 2-Wire Unbundled Copper Loop-Designed including manual service inquiry & facility reservation - Zone 2 | | 2 | UCL | UCLPB | 12.73 | 112.46 | 65.30 | 47.24 | 7.44 | | | | | | |
| | 2 Wire Unbundled Copper Loop-Designed including manual service inquiry & facility reservation - Zone 3 | | 3 | UCL | UCLPB | 14.30 | 112.46 | 65.30 | 47.24 | 7.44 | | | | | | |
| | Order Coordination for Unbundled Copper Loops (per loop) | | | UCL | UCLMC | | 8.15 | 8.15 | | | | | | | | |
| | 2-Wire Unbundled Copper Loop-Designed without manual service inquiry and facility reservation - Zone 1 | I | 1 | UCL | UCLPW | 11.01 | 91.46 | 54.30 | 47.24 | 7.44 | | | | | | |
| | 2-Wire Unbundled Copper Loop-Designed without manual service inquiry and facility reservation - Zone 2 | I | 2 | UCL | UCLPW | 12.73 | 91.46 | 54.30 | 47.24 | 7.44 | | | | | | |
| | 2-Wire Unbundled Copper Loop-Designed without manual service inquiry and facility reservation - Zone 3 | I | 3 | UCL | UCLPW | 14.30 | 91.46 | 54.30 | 47.24 | 7.44 | | | | | | |
| | Order Coordination for Unbundled Copper Loops (per loop) | | | UCL | UCLMC | | 8.15 | 8.15 | | | | | | | | |
| | CLEC to CLEC Conversion Charge without outside dispatch (UCL-Des) | | | UCL | UREWO | | 97.23 | 42.48 | | | | | | | | |
| 4-WIRE COPPER LOOP | | | | | | | | | | | | | | | | |
| | 4-Wire Copper Loop-Designed including manual service inquiry and facility reservation - Zone 1 | | 1 | UCL | UCL4S | 17.36 | 135.21 | 88.05 | 51.70 | 9.73 | | | | | | |
| | 4-Wire Copper Loop-Designed including manual service inquiry and facility reservation - Zone 2 | | 2 | UCL | UCL4S | 20.76 | 135.21 | 88.05 | 51.70 | 9.73 | | | | | | |
| | 4-Wire Copper Loop-Designed including manual service inquiry and facility reservation - Zone 3 | | 3 | UCL | UCL4S | 28.21 | 135.21 | 88.05 | 51.70 | 9.73 | | | | | | |
| | Order Coordination for Unbundled Copper Loops (per loop) | | | UCL | UCLMC | | 8.15 | 8.15 | | | | | | | | |
| | 4-Wire Copper Loop-Designed without manual service inquiry and facility reservation - Zone 1 | I | 1 | UCL | UCL4W | 17.36 | 114.21 | 67.05 | 51.70 | 9.73 | | | | | | |
| | 4-Wire Copper Loop-Designed without manual service inquiry and facility reservation - Zone 2 | I | 2 | UCL | UCL4W | 20.76 | 114.21 | 67.05 | 51.70 | 9.73 | | | | | | |
| | 4-Wire Copper Loop-Designed without manual service inquiry and facility reservation - Zone 3 | I | 3 | UCL | UCL4W | 28.21 | 114.21 | 67.05 | 51.70 | 9.73 | | | | | | |
| | Order Coordination for Unbundled Copper Loops (per loop) | | | UCL | UCLMC | | 8.15 | 8.15 | | | | | | | | |
| | CLEC to CLEC conversion Charge without outside dispatch | | | UCL | UREWO | | 97.23 | 42.48 | | | | | | | | |
| LOOP MODIFICATION | | | | | | | | | | | | | | | | |
| | Unbundled Loop Modification, Removal of Load Coils - 2 Wire pair less than or equal to 18k ft. per Unbundled Loop | I | | UAL, UHL, UCL, UEQ, ULS, UEA, UEANL, UEPSR, UEPSB | ULM2L | | 0.00 | 0.00 | | | | | | | | |
| | Unbundled Loop Modification Removal of Load Coils - 4 Wire less than or equal to 18K ft, per Unbundled Loop | I | | UHL, UCL, UEA | ULM4L | | 0.00 | 0.00 | | | | | | | | |
| | Unbundled Loop Modification Removal of Bridged Tap Removal, per unbundled loop | I | | UAL, UHL, UCL, UEQ,ULS,UEA, UEANL, UEPSR, UEPSB | ULMBT | | 32.41 | 32.41 | | | | | | | | |
| SUB-LOOPS | | | | | | | | | | | | | | | | |

## UNBUNDLED NETWORK ELEMENTS - Alabama

| CATEGORY | RATE ELEMENTS | Interim | Zone | BCS | USOC | RATES ($) | | | | | Svc Order Submitted Elec per LSR | Svc Order Submitted Manually per LSR | Attachment: 2 Incremental Charge - Manual Svc Order vs. Electronic- 1st | Attachment: 2 Incremental Charge - Manual Svc Order vs. Electronic- Add'l | Exhibit: A Incremental Charge - Manual Svc Order vs. Electronic- Disc 1st | Exhibit: A Incremental Charge - Manual Svc Order vs. Electronic- Disc Add'l |
|---|---|---|---|---|---|---|---|---|---|---|---|---|---|---|---|---|
| | | | | | | Rec | Nonrecurring | | Nonrecurring Disconnect | | OSS Rates ($) | | | | | |
| | | | | | | | First | Add'l | First | Add'l | SOMEC | SOMAN | SOMAN | SOMAN | SOMAN | SOMAN |
| Sub-Loop Distribution | | | | | | | | | | | | | | | | |
| | Sub-Loop - Per Cross Box Location - CLEC Feeder Facility Set-Up | I | | UEANL | USBSA | | 244.42 | | | | | | | | | |
| | Sub-Loop - Per Cross Box Location - Per 25 Pair Panel Set-Up | I | | UEANL | USBSB | | 22.64 | | | | | | | | | |
| | Sub-Loop - Per Building Equipment Room - CLEC Feeder Facility Set-Up | I | | UEANL | USBSC | | 177.45 | | | | | | | | | |
| | Sub-Loop - Per Building Equipment Room - Per 25 Pair Panel Set-Up | I | | UEANL | USBSD | | 55.15 | | | | | | | | | |
| | Sub-Loop Distribution Per 2-Wire Analog Voice Grade Loop - Zone 1 | | 1 | UEANL | USBN2 | 11.21 | 65.80 | 30.96 | 45.25 | 6.70 | | | | | | |
| | Sub-Loop Distribution Per 2-Wire Analog Voice Grade Loop - Zone 2 | | 2 | UEANL | USBN2 | 11.94 | 65.80 | 30.96 | 45.25 | 6.70 | | | | | | |
| | Sub-Loop Distribution Per 2-Wire Analog Voice Grade Loop - Zone 3 | | 3 | UEANL | USBN2 | 16.86 | 65.80 | 30.96 | 45.25 | 6.70 | | | | | | |
| | Order Coordination for Unbundled Sub-Loops, per sub-loop pair | | | UEANL | USBMC | | 8.15 | 8.15 | | | | | | | | |
| | Sub-Loop Distribution Per 4-Wire Analog Voice Grade Loop - Zone 1 | | 1 | UEANL | USBN4 | 8.46 | 79.03 | 44.19 | 49.71 | 9.07 | | | | | | |
| | Sub-Loop Distribution Per 4-Wire Analog Voice Grade Loop - Zone 2 | | 2 | UEANL | USBN4 | 16.67 | 79.03 | 44.19 | 49.71 | 9.07 | | | | | | |
| | Sub-Loop Distribution Per 4-Wire Analog Voice Grade Loop - Zone 3 | | 3 | UEANL | USBN4 | 32.57 | 79.03 | 44.19 | 49.71 | 9.07 | | | | | | |
| | Order Coordination for Unbundled Sub-Loops, per sub-loop pair | | | UEANL | USBMC | | 8.15 | 8.15 | | | | | | | | |
| | Sub-Loop 2-Wire Intrabuilding Network Cable (INC) | I | | UEANL | USBR2 | 2.27 | 53.01 | 18.17 | 45.25 | 6.70 | | | | | | |
| | Order Coordination for Unbundled Sub-Loops, per sub-loop pair | | | UEANL | USBMC | | 8.15 | 8.15 | | | | | | | | |
| | Sub-Loop 4-Wire Intrabuilding Network Cable (INC) | I | | UEANL | USBR4 | 5.16 | 59.25 | 24.41 | 49.71 | 9.07 | | | | | | |
| | Order Coordination for Unbundled Sub-Loops, per sub-loop pair | | | UEANL | USBMC | | 8.15 | 8.15 | | | | | | | | |
| | Loop Testing - Basic 1st Half Hour | | | UEANL | URET1 | | 34.16 | 34.16 | | | | | | | | |
| | Loop Testing - Basic Additional Half Hour | | | UEANL | URETA | | 19.85 | 19.85 | | | | | | | | |
| | 2 Wire Copper Unbundled Sub-Loop Distribution - Zone 1 | | 1 | UEF | UCS2X | 6.22 | 65.80 | 30.96 | 45.25 | 6.70 | | | | | | |
| | 2 Wire Copper Unbundled Sub-Loop Distribution - Zone 2 | | 2 | UEF | UCS2X | 8.76 | 65.80 | 30.96 | 45.25 | 6.70 | | | | | | |
| | 2 Wire Copper Unbundled Sub-Loop Distribution - Zone 3 | | 3 | UEF | UCS2X | 11.27 | 65.80 | 30.96 | 45.25 | 6.70 | | | | | | |
| | Order Coordination for Unbundled Sub-Loops, per sub-loop pair | | | UEF | USBMC | | 8.15 | 8.15 | | | | | | | | |
| | 4 Wire Copper Unbundled Sub-Loop Distribution - Zone 1 | | 1 | UEF | UCS4X | 6.11 | 79.03 | 44.19 | 49.71 | 9.07 | | | | | | |
| | 4 Wire Copper Unbundled Sub-Loop Distribution - Zone 2 | | 2 | UEF | UCS4X | 12.61 | 79.03 | 44.19 | 49.71 | 9.07 | | | | | | |
| | 4 Wire Copper Unbundled Sub-Loop Distribution - Zone 3 | | 3 | UEF | UCS4X | 15.36 | 79.03 | 44.19 | 49.71 | 9.07 | | | | | | |
| | Order Coordination for Unbundled Sub-Loops, per sub-loop pair | | | UEF | USBMC | | 8.15 | 8.15 | | | | | | | | |
| | Loop Testing - Basic 1st Half Hour | | | UEF | URET1 | | 34.16 | 34.16 | | | | | | | | |
| | Loop Testing - Basic Additional Half Hour | | | UEF | URETA | | 19.85 | 19.85 | | | | | | | | |
| Unbundled Network Terminating Wire (UNTW) | | | | | | | | | | | | | | | | |
| | Unbundled Network Terminating Wire (UNTW) per Pair | | | UENTW | UENPP | 0.40 | 30.01 | | | | | | | | | |
| Network Interface Device (NID) | | | | | | | | | | | | | | | | |
| | Network Interface Device (NID) - 1-2 lines | | | UENTW | UND12 | | 43.23 | 28.38 | | | | | | | | |
| | Network Interface Device (NID) - 1-6 lines | | | UENTW | UND16 | | 63.97 | 49.11 | | | | | | | | |
| | Network Interface Device Cross Connect - 2 W | | | UENTW | UNDC2 | | 5.87 | 5.87 | | | | | | | | |
| | Network Interface Device Cross Connect - 4W | | | UENTW | UNDC4 | | 5.87 | 5.87 | | | | | | | | |
| UNE OTHER, PROVISIONING ONLY - NO RATE | | | | | | | | | | | | | | | | |
| | NID - Dispatch and Service Order for NID installation | | | UENTW | UNDBX | 0.00 | 0.00 | | | | | | | | | |
| | UNTW Circuit Id Establishment, Provisioning Only - No Rate | | | UENTW | UENCE | 0.00 | 0.00 | | | | | | | | | |
| | Unbundled Contract Name, Provisioning Only - No Rate | | | UEANL,UEF,UEQ,UENTW | UNECN | 0.00 | 0.00 | | | | | | | | | |
| UNE OTHER, PROVISIONING ONLY - NO RATE | | | | | | | | | | | | | | | | |

| UNBUNDLED NETWORK ELEMENTS - Alabama | | | | | | | | | | | | | Attachment: 2 | | Exhibit: A | |
|---|---|---|---|---|---|---|---|---|---|---|---|---|---|---|---|---|
| CATEGORY | | RATE ELEMENTS | Interim | Zone | BCS | USOC | RATES ($) | | | | | Svc Order Submitted Elec per LSR | Svc Order Submitted Manually per LSR | Incremental Charge - Manual Svc Order vs. Electronic-1st | Incremental Charge - Manual Svc Order vs. Electronic-Add'l | Incremental Charge - Manual Svc Order vs. Electronic-Disc 1st | Incremental Charge - Manual Svc Order vs. Electronic-Disc Add'l |
| | | | | | | | Rec | Nonrecurring | | Nonrecurring Disconnect | | OSS Rates ($) | | | | | |
| | | | | | | | | First | Add'l | First | Add'l | SOMEC | SOMAN | SOMAN | SOMAN | SOMAN | SOMAN |
| | | Unbundled Contact Name, Provisioning Only - no rate | | | UAL,UCL,UDC,UDL, UDN,UEA,UHL,ULC | UNECN | 0.00 | 0.00 | | | | | | | | | |
| | | Unbundled Sub-Loop Feeder-2 Wire Cross Box Jumper - no rate | | | UEA,UDN,UCL,UDC | USBFQ | 0.00 | 0.00 | | | | | | | | | |
| | | Unbundled Sub-Loop Feeder-4 Wire Cross Box Jumper - no rate | | | UEA,USL,UCL,UDL | USBFR | 0.00 | 0.00 | | | | | | | | | |
| | | Unbundled DS1 Loop - Superframe Format Option - no rate | | | USL | CCOSF | 0.00 | 0.00 | | | | | | | | | |
| | | Unbundled DS1 Loop - Expanded Superframe Format option - no rate | | | USL | CCOEF | 0.00 | 0.00 | | | | | | | | | |
| HIGH CAPACITY UNBUNDLED LOCAL LOOP | | | | | | | | | | | | | | | | | |
| | | High Capacity Unbundled Local Loop - DS3 - Per Mile per month | | | UE3 | 1L5ND | 8.38 | | | | | | | | | | |
| | | High Capacity Unbundled Local Loop - DS3 - Facility Termination per month | | | UE3 | UE3PX | 308.98 | 451.52 | 263.94 | 119.49 | 83.58 | | | | | | |
| | | High Capacity Unbundled Local Loop - STS-1 - Per Mile per month | | | UDLSX | 1L5ND | 8.38 | | | | | | | | | | |
| | | High Capacity Unbundled Local Loop - STS-1 - Facility Termination per month | | | UDLSX | UDLS1 | 319.83 | 451.52 | 263.94 | 119.49 | 83.58 | | | | | | |
| LOOP MAKE-UP | | | | | | | | | | | | | | | | | |
| | | Loop Makeup - Preordering Without Reservation, per working or spare facility queried (Manual). | | | UMK | UMKLW | | 20.00 | 20.00 | | | | | | | | |
| | | Loop Makeup - Preordering With Reservation, per spare facility queried (Manual). | | | UMK | UMKLP | | 21.00 | 21.00 | | | | | | | | |
| | | Loop Makeup--With or Without Reservation, per working or spare facility queried (Mechanized) | | | UMK | UMKMQ | | 0.59 | 0.59 | | | | | | | | |
| LINE SHARING AND LINE SPLITTING | | | | | | | | | | | | | | | | | |
| | NOTE 1: The Line Sharing monthly recurring rates for all installations completed from October 02, 2003 through midnight October 01, 2004 shall be billed as follows: | | | | | | | | | | | | | | | | |
| | NOTE 1: 10/02/2003 – 10/01/2004: 25% of the rate for an unbundled copper loop non-designed ("UCLND") | | | | | | | | | | | | | | | | |
| | NOTE 1: 10/02/2004 – 10/01/2005: 50% of the rate for UCLND | | | | | | | | | | | | | | | | |
| | NOTE 1: 10/02/2005 – 10/01/2006: 75% of the rate for UCLND | | | | | | | | | | | | | | | | |
| | NOTE 1: Above will apply to USOCS: ULSDT and ULSCT | | | | | | | | | | | | | | | | |
| | **NOTE 2: The Line Sharing monthly recurring rates with USOCs ULSDC and ULSCC applies only to circuits installed and inservice on or before October 1, 2003 | | | | | | | | | | | | | | | | |
| | LINE SHARING | | | | | | | | | | | | | | | | |
| | SPLITTERS-CENTRAL OFFICE BASED | | | | | | | | | | | | | | | | |
| | | Line Sharing Splitter, per System 96 Line Capacity | | | ULS | ULSDA | 155.97 | 188.79 | 0.00 | 177.98 | 0.00 | | | | | | |
| | | Line Sharing Splitter, per System 24 Line Capacity | | | ULS | ULSDB | 38.99 | 188.79 | 0.00 | 177.98 | 0.00 | | | | | | |
| | | Line Sharing Splitter, Per System, 8 Line Capacity | | | ULS | ULSD8 | 12.73 | 377.58 | 0.00 | 355.96 | 0.00 | | | | | | |
| | | Line Sharing-DLEC Owned Splitter in CO-CFA activaton-deactivation (per LSOD) | | | ULS | ULSDG | | 86.47 | 0.00 | 49.84 | 0.00 | | | | | | |
| | END USER ORDERING-CENTRAL OFFICE BASED LINE SHARING | | | | | | | | | | | | | | | | |
| | | Line Sharing - per Line Activation (BST Owned splitter) - OBSOLETE see **NOTE 2 | | | ULS | ULSDC | 0.61 | 18.51 | 10.60 | 10.01 | 4.92 | | | | | | |
| | | Line Share Service, TRO per line activation, BST owned splitter - Central Office Located (25% of UCLND) - please see NOTE 1 (E:10/2/2003) | | | ULS | ULSDT | 2.80 | 18.51 | 10.60 | 10.01 | 4.92 | | | | | | |
| | | Line Share Service, TRO per line activation, BST owned splitter - Central Office Located (50% of UCLND) - please see NOTE 1 (E:10/2/2004) | | | ULS | ULSDT | 5.60 | 18.51 | 10.60 | 10.01 | 4.92 | | | | | | |
| | | Line Share Service, TRO per line activation, BST owned splitter - Central Office Located (75% of UCLND) - please see NOTE 1 (E:10/2/2005) | | | ULS | ULSDT | 8.40 | 18.51 | 10.60 | 10.01 | 4.92 | | | | | | |
| | | Line Sharing - per Subsequent Activity per Line Rearrangement(BST Owned Splitter | | | ULS | ULSDS | | 16.39 | 8.19 | | | | | | | | |
| | | Line Sharing - per Subsequent Activity per Line Rearrangement(DLEC Owned Splitter | | | ULS | ULSCS | | 16.39 | 8.19 | | | | | | | | |
| | | Line Sharing - per Line Activation (DLEC owned Splitter) - OBSOLETE see **NOTE 2 | | | ULS | ULSCC | 0.61 | 47.44 | 19.31 | 20.02 | 9.83 | | | | | | |

## UNBUNDLED NETWORK ELEMENTS - Alabama

| CATEGORY | RATE ELEMENTS | Interim | Zone | BCS | USOC | RATES ($) | | | | | Svc Order Submitted Elec per LSR | Svc Order Submitted Manually per LSR | Attachment: 2 | | Exhibit: A | |
|---|---|---|---|---|---|---|---|---|---|---|---|---|---|---|---|---|
| | | | | | | | | | | | | | Incremental Charge - Manual Svc Order vs. Electronic-1st | Incremental Charge - Manual Svc Order vs. Electronic-Add'l | Incremental Charge - Manual Svc Order vs. Electronic-Disc 1st | Incremental Charge - Manual Svc Order vs. Electronic-Disc Add'l |
| | | | | | | Rec | Nonrecurring | | Nonrecurring Disconnect | | OSS Rates ($) | | | | | |
| | | | | | | | First | Add'l | First | Add'l | SOMEC | SOMAN | SOMAN | SOMAN | SOMAN | SOMAN |
| | Line Share Service, TRO per line activation, CLEC owned splitter - Central Office Located (25% of UCLND) - please see NOTE 1 (E:10/2/2003) | | | ULS | ULSCT | 2.80 | 47.44 | 19.31 | 20.02 | 9.83 | | | | | | |
| | Line Share Service, TRO per line activation, CLEC owned splitter - Central Office Located (50% of UCLND) - please see NOTE 1 (E:10/2/2004) | | | ULS | ULSCT | 5.60 | 47.44 | 19.31 | 20.02 | 9.83 | | | | | | |
| | Line Share Service, TRO per line activation, CLEC owned splitter - Central Office Located (75% of UCLND) - please see NOTE 1 (E:10/2/2005) | | | ULS | ULSCT | 8.40 | 47.44 | 19.31 | 20.02 | 9.83 | | | | | | |
| | **LINE SPLITTING** | | | | | | | | | | | | | | | |
| | **END USER ORDERING-CENTRAL OFFICE BASED** | | | | | | | | | | | | | | | |
| | Line Splitting - per line activation DLEC owned splitter | | | UEPSR UEPSB | UREOS | 0.61 | | | | | | | | | | |
| | Line Splitting - per line activation BST owned - physical | | | UEPSR UEPSB | UREBP | 0.61 | 37.01 | 21.19 | 20.02 | 9.83 | | | | | | |
| | Line Splitting - per line activation BST owned - virtual | | | UEPSR UEPSB | UREBV | 0.61 | 37.01 | 21.19 | 20.02 | 9.83 | | | | | | |
| | **MAINTENANCE** | | | | | | | | | | | | | | | |
| | No Trouble Found - per 1/2 hour increments - Basic | | | | | | 80.00 | 55.00 | | | | | | | | |
| | No Trouble Found - per 1/2 hour increments - Overtime | | | | | | 120.00 | 82.50 | | | | | | | | |
| | No Trouble Found - per 1/2 hour increments - Premium | | | | | | 160.00 | 110.00 | | | | | | | | |
| **UNBUNDLED DEDICATED TRANSPORT** | | | | | | | | | | | | | | | | |
| | **INTEROFFICE CHANNEL - DEDICATED TRANSPORT** | | | | | | | | | | | | | | | |
| | Interoffice Channel - Dedicated Transport - 2-Wire Voice Grade - Per Mile per month | | | U1TVX | 1L5XX | 0.008838 | | | | | | | | | | |
| | Interoffice Channel - Dedicated Transport- 2- Wire Voice Grade - Facility Termination | | | U1TVX | U1TV2 | 21.13 | 40.54 | 27.41 | 16.74 | 6.90 | | | | | | |
| | Interoffice Channel - Dedicated Transpor t- 2-Wire Voice Grade Rev Bat. - Per Mile per month | | | U1TVX | 1L5XX | 0.008838 | | | | | | | | | | |
| | Interoffice Channel - Dedicated Transport- 2- Wire VG Rev Bat. - Facility Termination | | | U1TVX | U1TR2 | 21.13 | 40.54 | 27.41 | 16.74 | 6.90 | | | | | | |
| | Interoffice Channel - Dedicated Transport - 4-Wire Voice Grade - Per Mile per month | | | U1TVX | 1L5XX | 0.008838 | | | | | | | | | | |
| | Interoffice Channel - Dedicated Transport - 4- Wire Voice Grade - Facility Termination | | | U1TVX | U1TV4 | 18.73 | 40.54 | 27.41 | 16.74 | 6.90 | | | | | | |
| | Interoffice Channel - Dedicated Transport - 56 kbps - per mile per month | | | U1TDX | 1L5XX | 0.008838 | | | | | | | | | | |
| | Interoffice Channel - Dedicated Transport - 56 kbps - Facility Termination | | | U1TDX | U1TD5 | 15.12 | 40.54 | 27.41 | 16.74 | 6.90 | | | | | | |
| | Interoffice Channel - Dedicated Transport - 64 kbps - per mile per month | | | U1TDX | 1L5XX | 0.008838 | | | | | | | | | | |
| | Interoffice Channel - Dedicated Transport - 64 kbps - Facility Termination | | | U1TDX | U1TD6 | 15.12 | 40.54 | 27.41 | 16.74 | 6.90 | | | | | | |
| | Interoffice Channel - Dedicated Channel - DS1 - Per Mile per month | | | U1TD1 | 1L5XX | 0.18 | | | | | | | | | | |
| | Interoffice Channel - Dedicated Tranport - DS1 - Facility Termination | | | U1TD1 | U1TF1 | 60.16 | 89.27 | 81.81 | 16.35 | 14.44 | | | | | | |
| | Interoffice Channel - Dedicated Transport - DS3 - Per Mile per month | | | U1TD3 | 1L5XX | 4.09 | | | | | | | | | | |
| | Interoffice Channel - Dedicated Transport - DS3 - Facility Termination per month | | | U1TD3 | U1TF3 | 703.52 | 278.75 | 162.76 | 60.20 | 28.46 | | | | | | |
| | Interoffice Channel - Dedicated Transport - STS-1 - Per Mile per month | | | U1TS1 | 1L5XX | 4.09 | | | | | | | | | | |
| | Interoffice Channel - Dedicated Transport - STS-1 - Facility Termination | | | U1TS1 | U1TFS | 701.37 | 278.75 | 162.76 | 60.20 | 28.46 | | | | | | |
| **DARK FIBER** | | | | | | | | | | | | | | | | |
| | Dark Fiber, Four Fiber Strands, Per Route Mile or Fraction Thereof per month - Interoffice Channel | | | UDF, UDFCX | 1L5DF | 23.29 | | | | | | | | | | |
| | NRC Dark Fiber - Interoffice Channel | | | UDF, UDFCX | UDF14 | | 639.09 | 137.87 | 317.06 | 197.66 | | | | | | |
| | Dark Fiber, Four Fiber Strands, Per Route Mile or Fraction Thereof per month - Local Loop | | | UDF, UDFCX | 1L5DL | 60.32 | | | | | | | | | | |
| | NRC Dark Fiber - Local Loop | | | UDF, UDFCX | UDFL4 | | 639.09 | 137.87 | 317.06 | 197.66 | | | | | | |

| UNBUNDLED NETWORK ELEMENTS - Alabama | | | | | | | | | | | | | | Attachment: 2 | | Exhibit: A | |
|---|---|---|---|---|---|---|---|---|---|---|---|---|---|---|---|---|---|
| CATEGORY | | RATE ELEMENTS | Interim | Zone | BCS | USOC | RATES ($) | | | | | Svc Order Submitted Elec per LSR | Svc Order Submitted Manually per LSR | Incremental Charge - Manual Svc Order vs. Electronic-1st | Incremental Charge - Manual Svc Order vs. Electronic-Add'l | Incremental Charge - Manual Svc Order vs. Electronic-Disc 1st | Incremental Charge - Manual Svc Order vs. Electronic-Disc Add'l |
| | | | | | | | Rec | Nonrecurring | | Nonrecurring Disconnect | | OSS Rates ($) | | | | | |
| | | | | | | | | First | Add'l | First | Add'l | SOMEC | SOMAN | SOMAN | SOMAN | SOMAN | SOMAN |
| 8XX ACCESS TEN DIGIT SCREENING | | | | | | | | | | | | | | | | | |
| | | 8XX Access Ten Digit Screening, Per Call | | | OHD | | 0.00056 | | | | | | | | | | |
| | | 8XX Access Ten Digit Screening, Reservation Charge Per 8XX Number Reserved | | | OHD | N8R1X | | 2.58 | 0.44 | | | | | | | | |
| | | 8XX Access Ten Digit Screening, Per 8XX No. Established W/O POTS Translations | | | OHD | | | 5.94 | 0.81 | 4.57 | 0.54 | | | | | | |
| | | 8XX Access Ten Digit Screening, Per 8XX No. Established With POTS Translations | | | OHD | N8FTX | | 5.94 | 0.81 | 4.57 | 0.54 | | | | | | |
| | | 8XX Access Ten Digit Screening, Customized Area of Service Per 8XX Number | | | OHD | N8FCX | | 2.58 | 1.29 | | | | | | | | |
| | | 8XX Access Ten Digit Screening, Multiple InterLATA CXR Routing Per CXR Requested Per 8XX No. | | | OHD | N8FMX | | 3.02 | 1.73 | | | | | | | | |
| | | 8XX Access Ten Digit Screening, Change Charge Per Request | | | OHD | N8FAX | | 3.02 | 0.44 | | | | | | | | |
| | | 8XX Access Ten Digit Screening, Call Handling and Destination Features | | | OHD | N8FDX | | 2.58 | | | | | | | | | |
| | | 8XX Access Ten Digit Screening, w/ 8FL No. Delivery | | | OHD | | 0.000565 | | | | | | | | | | |
| | | 8XX Access Ten Digit Screening, w/ POTS No. Delivery | | | OHD | | 0.000565 | | | | | | | | | | |
| LINE INFORMATION DATA BASE ACCESS (LIDB) | | | | | | | | | | | | | | | | | |
| | | LIDB Common Transport Per Query | | | OQT | | 0.00002 | | | | | | | | | | |
| | | LIDB Validation Per Query | | | OQU | | 0.012002 | | | | | | | | | | |
| | | LIDB Originating Point Code Establishment or Change | | | OQT, OQU | NRBPX | | 34.32 | | 42.08 | | | | | | | |
| SIGNALING (CCS7) | | | | | | | | | | | | | | | | | |
| | | CCS7 Signaling Connection, Per 56Kbps Facility | | | | | 15.46 | 35.53 | 35.53 | 16.44 | 16.44 | | | | | | |
| | | CCS7 Signaling Termination, Per STP Port | | | UDB | PT8SX | 130.83 | | | | | | | | | | |
| | | CCS7 Signaling Usage, Per Call Setup Message | | | | | 0.0000142 | | | | | | | | | | |
| | | CCS7 Signaling Usage, Per TCAP Message | | | UDB | | 0.0000569 | | | | | | | | | | |
| | | CCS7 Signaling Connection, Per link (A link) | | | UDB | TPP++ | 15.46 | 35.53 | 35.53 | 16.44 | 16.44 | | | | | | |
| | | CCS7 Signaling Connection, Per link (B link) (also known as D link) | | | UDB | TPP++ | 15.46 | 35.53 | 35.53 | 16.44 | 16.44 | | | | | | |
| | | CCS7 Signaling Usage, Per ISUP Message | | | UDB | | 0.0000142 | | | | | | | | | | |
| | | CCS7 Signaling Usage Surrogate, per link per LATA | | | UDB | STU56 | 650.33 | | | | | | | | | | |
| | | CCS7 Signaling Point Code, per Originating Point Code Establishment or Change, per STP affected | | | UDB | CCAPO | | 29.01 | 29.01 | 35.57 | 35.57 | | | | | | |
| E911 SERVICE | | | | | | | | | | | | | | | | | |
| | | Local Channel - Dedicated - 2-wr Voice Grade | | | | | 13.97 | 193.10 | 33.17 | 36.64 | 3.20 | | | | | | |
| | | Interoffice Transport - Dedicated - 2-wr Voice Grade Per Mile | | | | | 0.008838 | | | | | | | | | | |
| | | Interoffice Transport - Dedicated - 2-wr Voice Grade Per Facility Termination | | | | | 21.13 | 40.54 | 27.41 | 16.74 | 6.90 | | | | | | |
| | | Local Channel - Dedicated - DS1 - Zone 1 | | | | | 35.76 | 177.47 | 153.72 | 22.19 | 15.26 | | | | | | |
| | | Local Channel - Dedicated - DS1 - Zone 2 | | | | | 49.98 | 177.47 | 153.72 | 22.19 | 15.26 | | | | | | |
| | | Local Channel - Dedicated - DS1 - Zone 3 | | | | | 107.63 | 177.47 | 153.72 | 22.19 | 15.26 | | | | | | |
| | | Interoffice Transport - Dedicated - DS1 Per Mile | | | | | 0.18 | | | | | | | | | | |
| | | Interoffice Transport - Dedicated - DS1 Per Facility Termination | | | | | 60.16 | 89.27 | 81.81 | 16.35 | 14.44 | | | | | | |
| CALLING NAME (CNAM) SERVICE | | | | | | | | | | | | | | | | | |
| | | CNAM For DB Owners - Service Establishment | | | OQV | | | 22.95 | | 21.11 | | | | | | | |
| | | CNAM For Non DB Owners - Service Establishment | | | OQV | | | 22.95 | | 21.11 | | | | | | | |
| | | CNAM For DB Owners - Service Provisioning With Point Code Establishment | | | OQV | | | 990.88 | 732.84 | 268.93 | 197.74 | | | | | | |
| | | CNAM For Non DB Owners - Service Provisioning With Point Code Establishment | | | OQV | | | 342.33 | 245.14 | 275.25 | 197.74 | | | | | | |
| | | CNAM for DB Owners, Per Query | | | OQV | | 0.000902 | | | | | | | | | | |
| | | CNAM for Non DB Owners, Per Query | | | OQV | | 0.000902 | | | | | | | | | | |
| SELECTIVE ROUTING | | | | | | | | | | | | | | | | | |
| | | Selective Routing Per Unique Line Class Code Per Request Per Switch | | | | | | 84.70 | 84.70 | 14.11 | 14.11 | | | | | | |
| VIRTUAL COLLOCATION | | | | | | | | | | | | | | | | | |
| | | Virtual Collocation-2 Wire Cross Connects (Loop) for Line Splitting | | | UEPSR UEPSB | VE1LS | 0.03 | 12.30 | 11.80 | 6.03 | 5.44 | | | | | | |

| UNBUNDLED NETWORK ELEMENTS - Alabama | | | | | | | | | | | | | | Attachment: 2 | | Exhibit: A | |
|---|---|---|---|---|---|---|---|---|---|---|---|---|---|---|---|---|---|
| CATEGORY | RATE ELEMENTS | Interim | Zone | BCS | USOC | RATES ($) | | | | | Svc Order Submitted Elec per LSR | Svc Order Submitted Manually per LSR | Incremental Charge - Manual Svc Order vs. Electronic-1st | Incremental Charge - Manual Svc Order vs. Electronic-Add'l | Incremental Charge - Manual Svc Order vs. Electronic-Disc 1st | Incremental Charge - Manual Svc Order vs. Electronic-Disc Add'l |
| | | | | | | Rec | Nonrecurring | | Nonrecurring Disconnect | | OSS Rates ($) | | | | | |
| | | | | | | | First | Add'l | First | Add'l | SOMEC | SOMAN | SOMAN | SOMAN | SOMAN | SOMAN |
| PHYSICAL COLLOCATION | | | | | | | | | | | | | | | | |
| | Physical Collocation-2 Wire Cross Connects (Loop) for Line Splitting | | | UEPSR UEPSB | PE1LS | 0.03 | 12.30 | 11.80 | 6.03 | 5.44 | | | | | | |
| AIN SELECTIVE CARRIER ROUTING | | | | | | | | | | | | | | | | |
| | Regional Service Establishment | | | SRC | SRCEC | | 101,098.91 | | 8,590.70 | | | | | | | |
| | End Office Establishment | | | SRC | SRCEO | | 169.88 | 169.88 | 1.70 | 1.70 | | | | | | |
| | Query NRC, per query | | | SRC | | 0.002749 | | | | | | | | | | |
| AIN - BELLSOUTH AIN SMS ACCESS SERVICE | | | | | | | | | | | | | | | | |
| | AIN SMS Access Service - Service Establishment, Per State, Initial Setup | | | A1N | CAMSE | | 39.44 | 39.44 | 40.69 | 40.69 | | | | | | |
| | AIN SMS Access Service - Port Connection - Dial/Shared Access | | | A1N | CAMDP | | 7.83 | 7.83 | 9.09 | 9.09 | | | | | | |
| | AIN SMS Access Service - Port Connection - ISDN Access | | | A1N | CAM1P | | 7.83 | 7.83 | 9.09 | 9.09 | | | | | | |
| | AIN SMS Access Service - User Identification Codes - Per User ID Code | | | A1N | CAMAU | | 35.00 | 35.00 | 27.06 | 27.06 | | | | | | |
| | AIN SMS Access Service - Security Card, Per User ID Code, Initial or Replacement | | | A1N | CAMRC | | 41.88 | 41.88 | 11.71 | 11.71 | | | | | | |
| | AIN SMS Access Service - Storage, Per Unit (100 Kilobytes) | | | | | 0.002188 | | | | | | | | | | |
| | AIN SMS Access Service - Session, Per Minute | | | | | 0.59 | | | | | | | | | | |
| | AIN SMS Access Service - Company Performed Session, Per Minute | | | | | 0.73 | | | | | | | | | | |
| AIN - BELLSOUTH AIN TOOLKIT SERVICE | | | | | | | | | | | | | | | | |
| | AIN Toolkit Service - Service Establishment Charge, Per State, Initial Setup | | | CAM | BAPSC | | 39.44 | 39.44 | 40.69 | 40.69 | | | | | | |
| | AIN Toolkit Service - Training Session, Per Customer | | | | BAPVX | | 4,202.17 | 4,202.17 | | | | | | | | |
| | AIN Toolkit Service - Trigger Access Charge, Per Trigger, Per DN, Term. Attempt | | | | BAPTT | | 7.83 | 7.83 | 9.09 | 9.09 | | | | | | |
| | AIN Toolkit Service - Trigger Access Charge, Per Trigger, Per DN, Off-Hook Delay | | | | BAPTD | | 7.83 | 7.83 | 9.09 | 9.09 | | | | | | |
| | AIN Toolkit Service - Trigger Access Charge, Per Trigger, Per DN, Off-Hook Immediate | | | | BAPTM | | 7.83 | 7.83 | 9.09 | 9.09 | | | | | | |
| | AIN Toolkit Service - Trigger Access Charge, Per Trigger, Per DN, 10-Digit PODP | | | | BAPTO | | 34.47 | 34.47 | 14.36 | 14.36 | | | | | | |
| | AIN Toolkit Service - Trigger Access Charge, Per Trigger, Per DN, CDP | | | | BAPTC | | 34.47 | 34.47 | 14.36 | 14.36 | | | | | | |
| | AIN Toolkit Service - Trigger Access Charge, Per Trigger, Per DN, Feature Code | | | | BAPTF | | 34.47 | 34.47 | 14.36 | 14.36 | | | | | | |
| | AIN Toolkit Service - Query Charge, Per Query | | | | | 0.05 | | | | | | | | | | |
| | AIN Toolkit Service - Type 1 Node Charge, Per AIN Toolkit Subscription, Per Node, Per Query | | | | | 0.00582 | | | | | | | | | | |
| | AIN Toolkit Service - SCP Storage Charge, Per SMS Access Account, Per 100 Kilobytes | | | | | 0.05 | | | | | | | | | | |
| | AIN Toolkit Service - Monthly report - Per AIN Toolkit Service Subscription | | | CAM | BAPMS | 10.17 | 7.83 | 7.83 | 5.50 | 5.50 | | | | | | |
| | AIN Toolkit Service - Special Study - Per AIN Toolkit Service Subscription | | | CAM | BAPLS | 2.87 | 8.66 | 8.66 | | | | | | | | |
| | AIN Toolkit Service - Call Event Report - Per AIN Toolkit Service Subscription | | | CAM | BAPDS | 7.39 | 7.83 | 7.83 | 5.50 | 5.50 | | | | | | |
| | AIN Toolkit Service - Call Event Special Study - Per AIN Toolkit Service Subscription | | | CAM | BAPES | 0.10 | 8.66 | 8.66 | | | | | | | | |
| ENHANCED EXTENDED LINK (EELs) | | | | | | | | | | | | | | | | |
| | NOTE: The monthly recurring and non-recurring charges below will apply and the Switch-As-Is Charge will not apply for UNE combinations provisioned as ' Ordinarily Combined' Network Elements. | | | | | | | | | | | | | | | |
| | NOTE: The monthly recurring and the Switch-As-Is Charge and not the non-recurring charges below will apply for UNE combinations provisioned as ' Currently Combined' Network Elements. | | | | | | | | | | | | | | | |
| | EXTENTED 2-WIRE VOICE GRADE EXTENDED LOOP WITH DEDICATED DS1 INTEROFFICE TRANSPORT | | | | | | | | | | | | | | | |
| | First 2-Wire VG Loop (SL2) in Combination - Zone 1 | | 1 | UNCVX | UEAL2 | 14.38 | 88.00 | 55.00 | 47.24 | 7.44 | | | | | | |
| | First 2-Wire VG Loop (SL2) in Combination - Zone 2 | | 2 | UNCVX | UEAL2 | 22.85 | 88.00 | 55.00 | 47.24 | 7.44 | | | | | | |
| | First 2-Wire VG Loop (SL2) in Combination - Zone 3 | | 3 | UNCVX | UEAL2 | 36.14 | 88.00 | 55.00 | 47.24 | 7.44 | | | | | | |
| | Interoffice Transport - Dedicated - DS1 combination - Per Mile per month | | | UNC1X | 1L5XX | 0.18 | | | | | | | | | | |

## UNBUNDLED NETWORK ELEMENTS - Alabama

| CATEGORY | RATE ELEMENTS | Interim | Zone | BCS | USOC | RATES ($) | | | | | Svc Order Submitted Elec per LSR | Svc Order Submitted Manually per LSR | Attachment: 2 Incremental Charge - Manual Svc Order vs. Electronic-1st | Attachment: 2 Incremental Charge - Manual Svc Order vs. Electronic-Add'l | Exhibit: A Incremental Charge - Manual Svc Order vs. Electronic-Disc 1st | Exhibit: A Incremental Charge - Manual Svc Order vs. Electronic-Disc Add'l |
|---|---|---|---|---|---|---|---|---|---|---|---|---|---|---|---|---|
| | | | | | | Rec | Nonrecurring | | Nonrecurring Disconnect | | OSS Rates ($) | | | | | |
| | | | | | | | First | Add'l | First | Add'l | SOMEC | SOMAN | SOMAN | SOMAN | SOMAN | SOMAN |
| | Interoffice Transport - Dedicated - DS1 combination - Facility Termination per month | | | UNC1X | U1TF1 | 60.16 | 89.27 | 81.81 | 16.35 | 14.44 | | | | | | |
| | 1/0 Channelization System in combination Per Month | | | UNC1X | MQ1 | 101.06 | 91.04 | 62.57 | 10.54 | 9.79 | | | | | | |
| | Voice Grade COCI - Per Month | | | UNCVX | 1D1VG | 0.53 | 6.58 | 4.72 | | | | | | | | |
| | Each Additional 2-Wire VG Loop (SL 2) in Combination - Zone 1 | | 1 | UNCVX | UEAL2 | 14.38 | 88.00 | 55.00 | 47.24 | 7.44 | | | | | | |
| | Each Additional 2-Wire VG Loop (SL 2) in Combination - Zone 2 | | 2 | UNCVX | UEAL2 | 22.85 | 88.00 | 55.00 | 47.24 | 7.44 | | | | | | |
| | Each Additional 2-Wire VG Loop (SL 2) in Combination - Zone 3 | | 3 | UNCVX | UEAL2 | 36.14 | 88.00 | 55.00 | 47.24 | 7.44 | | | | | | |
| | Voice Grade COCI - Per Month | | | UNCVX | 1D1VG | 0.53 | 6.58 | 4.72 | | | | | | | | |
| | Nonrecurring Currently Combined Network Elements Switch -As-Is Charge | | | UNC1X | UNCCC | | 5.59 | 5.59 | 6.98 | 6.98 | | | | | | |
| | **EXTENDED 4-WIRE VOICE GRADE EXTENDED LOOP WITH DEDICATED DS1 INTEROFFICE TRANSPORT** | | | | | | | | | | | | | | | |
| | First 4-Wire Analog Voice Grade Loop in Combination - Zone 1 | | 1 | UNCVX | UEAL4 | 25.34 | 131.97 | 94.51 | 59.14 | 14.50 | | | | | | |
| | First 4-Wire Analog Voice Grade Loop in Combination - Zone 2 | | 2 | UNCVX | UEAL4 | 38.58 | 131.97 | 94.51 | 59.14 | 14.50 | | | | | | |
| | First 4-Wire Analog Voice Grade Loop in Combination - Zone 3 | | 3 | UNCVX | UEAL4 | 60.02 | 131.97 | 94.51 | 59.14 | 14.50 | | | | | | |
| | Interoffice Transport - Dedicated - DS1 combination - Per Mile Per Month | | | UNC1X | 1L5XX | 0.18 | | | | | | | | | | |
| | Interoffice Transport - Dedicated - DS1 - Facility Termination Per Month | | | UNC1X | U1TF1 | 60.16 | 89.27 | 81.81 | 16.35 | 14.44 | | | | | | |
| | 1/0 Channel System in combination Per Month | | | UNC1X | MQ1 | 101.06 | 91.04 | 62.57 | 10.54 | 9.79 | | | | | | |
| | Voice Grade COCI in combination - per month | | | UNCVX | 1D1VG | 0.53 | 6.58 | 4.72 | | | | | | | | |
| | Additional 4-Wire Analog Voice Grade Loop in same DS1 Interoffice Transport Combination - Zone 1 | | 1 | UNCVX | UEAL4 | 25.34 | 131.97 | 94.51 | 59.14 | 14.50 | | | | | | |
| | Additional 4-Wire Analog Voice Grade Loop in same DS1 Interoffice Transport Combination - Zone 2 | | 2 | UNCVX | UEAL4 | 38.58 | 131.97 | 94.51 | 59.14 | 14.50 | | | | | | |
| | Additional 4-Wire Analog Voice Grade Loop in same DS1 Interoffice Transport Combination - Zone 3 | | 3 | UNCVX | UEAL4 | 60.02 | 131.97 | 94.51 | 59.14 | 14.50 | | | | | | |
| | Additional Voice Grade COCI in combination - per month | | | UNCVX | 1D1VG | 0.53 | 6.58 | 4.72 | | | | | | | | |
| | Nonrecurring Currently Combined Network Elements Switch -As-Is Charge | | | UNC1X | UNCCC | | 5.59 | 5.59 | 6.98 | 6.98 | | | | | | |
| | **EXTENDED 4-WIRE 56 KBPS EXTENDED DIGITAL LOOP WITH DEDICATED DS1 INTEROFFICE TRANSPORT** | | | | | | | | | | | | | | | |
| | First 4-Wire 56Kbps Digital Grade Loop in Combination - Zone 1 | | 1 | UNCDX | UDL56 | 26.09 | 126.27 | 88.80 | 59.14 | 14.50 | | | | | | |
| | First 4-Wire 56Kbps Digital Grade Loop in Combination - Zone 2 | | 2 | UNCDX | UDL56 | 35.95 | 126.27 | 88.80 | 59.14 | 14.50 | | | | | | |
| | First 4-Wire 56Kbps Digital Grade Loop in Combination - Zone 3 | | 3 | UNCDX | UDL56 | 37.88 | 126.27 | 88.80 | 59.14 | 14.50 | | | | | | |
| | Interoffice Transport - Dedicated - DS1 combination - Per Mile Per Month | | | UNC1X | 1L5XX | 0.18 | | | | | | | | | | |
| | Interoffice Transport - Dedicated - DS1 - combination Facility Termination Per Month | | | UNC1X | U1TF1 | 60.16 | 89.27 | 81.81 | 16.35 | 14.44 | | | | | | |
| | 1/0 Channel System in combination Per Month | | | UNC1X | MQ1 | 101.06 | 91.04 | 62.57 | 10.54 | 9.79 | | | | | | |
| | OCU-DP COCI (data) per month (2.4-64kbs) | | | UNCDX | 1D1DD | 1.12 | 6.58 | 4.72 | | | | | | | | |
| | Additional 4-Wire 56Kbps Digital Grade Loop in same DS1 Interoffice Transport Combination - Zone 1 | | 1 | UNCDX | UDL56 | 26.09 | 126.27 | 88.80 | 59.14 | 14.50 | | | | | | |
| | Additional 4-Wire 56Kbps Digital Grade Loop in same DS1 Interoffice Transport Combination - Zone 2 | | 2 | UNCDX | UDL56 | 35.95 | 126.27 | 88.80 | 59.14 | 14.50 | | | | | | |
| | Additional 4-Wire 56Kbps Digital Grade Loop in same DS1 Interoffice Transport Combination - Zone 3 | | 3 | UNCDX | UDL56 | 37.88 | 126.27 | 88.80 | 59.14 | 14.50 | | | | | | |
| | Additional OCU-DP COCI (data) - In combination per month (2.4-64kbs) | | | UNCDX | 1D1DD | 1.12 | 6.58 | 4.72 | | | | | | | | |
| | Nonrecurring Currently Combined Network Elements Switch -As-Is Charge | | | UNC1X | UNCCC | | 5.59 | 5.59 | 6.98 | 6.98 | | | | | | |
| | **EXTENDED 4-WIRE 64 KBPS EXTENDED DIGITAL LOOP WITH DEDICATED DS1 INTEROFFICE TRANSPORT** | | | | | | | | | | | | | | | |

## UNBUNDLED NETWORK ELEMENTS - Alabama

| CATEGORY | RATE ELEMENTS | Interim | Zone | BCS | USOC | RATES ($) | | | | | Svc Order Submitted Elec per LSR | Svc Order Submitted Manually per LSR | Attachment: 2 Incremental Charge - Manual Svc Order vs. Electronic- 1st | Attachment: 2 Incremental Charge - Manual Svc Order vs. Electronic- Add'l | Exhibit: A Incremental Charge - Manual Svc Order vs. Electronic- Disc 1st | Exhibit: A Incremental Charge - Manual Svc Order vs. Electronic- Disc Add'l |
|---|---|---|---|---|---|---|---|---|---|---|---|---|---|---|---|---|
| | | | | | | Rec | Nonrecurring | | Nonrecurring Disconnect | | OSS Rates ($) | | | | | |
| | | | | | | | First | Add'l | First | Add'l | SOMEC | SOMAN | SOMAN | SOMAN | SOMAN | SOMAN |
| | First 4-Wire 64Kbps Digital Grade Loop in Combination - Zone 1 | | 1 | UNCDX | UDL64 | 26.09 | 126.27 | 88.80 | 59.14 | 14.50 | | | | | | |
| | First 4-Wire 64Kbps Digital Grade Loop in Combination - Zone 2 | | 2 | UNCDX | UDL64 | 35.95 | 126.27 | 88.80 | 59.14 | 14.50 | | | | | | |
| | First 4-Wire 64Kbps Digital Grade Loop in Combination - Zone 3 | | 3 | UNCDX | UDL64 | 37.88 | 126.27 | 88.80 | 59.14 | 14.50 | | | | | | |
| | Interoffice Transport - Dedicated - DS1 combination - Per Mile Per Month | | | UNC1X | 1L5XX | 0.18 | | | | | | | | | | |
| | Interoffice Transport - Dedicated - DS1 combination - Facility Termination Per Month | | | UNC1X | U1TF1 | 60.16 | 89.27 | 81.81 | 16.35 | 14.44 | | | | | | |
| | 1/0 Channel System in combination Per Month | | | UNC1X | MQ1 | 101.06 | 91.04 | 62.57 | 10.54 | 9.79 | | | | | | |
| | OCU-DP COCI (data) - in combination - per month (2.4-64kbs) | | | UNCDX | 1D1DD | 1.12 | 6.58 | 4.72 | | | | | | | | |
| | Additional 4-Wire 64Kbps Digital Grade Loop in same DS1 Interoffice Transport Combination - Zone 1 | | 1 | UNCDX | UDL64 | 26.09 | 126.27 | 88.80 | 59.14 | 14.50 | | | | | | |
| | Additional 4-Wire 64Kbps Digital Grade Loop in same DS1 Interoffice Transport Combination - Zone 2 | | 2 | UNCDX | UDL64 | 35.95 | 126.27 | 88.80 | 59.14 | 14.50 | | | | | | |
| | Additional 4-Wire 64Kbps Digital Grade Loop in same DS1 Interoffice Transport Combination - Zone 3 | | 3 | UNCDX | UDL64 | 37.88 | 126.27 | 88.80 | 59.14 | 14.50 | | | | | | |
| | Additional OCU-DP COCI (data) - in combination - per month (2.4-64kbs) | | | UNCDX | 1D1DD | 1.12 | 6.58 | 4.72 | | | | | | | | |
| | Nonrecurring Currently Combined Network Elements Switch -As-Is Charge | | | UNC1X | UNCCC | | 5.59 | 5.59 | 6.98 | 6.98 | | | | | | |
| **EXTENDED 4-WIRE DS1 DIGITAL EXTENDED LOOP WITH DEDICATED DS1 INTEROFFICE TRANSPORT** | | | | | | | | | | | | | | | | |
| | 4-Wire DS1 Digital Loop in Combination - Zone 1 | | 1 | UNC1X | USLXX | 82.55 | 252.47 | 157.54 | 44.70 | 11.71 | | | | | | |
| | 4-Wire DS1 Digital Loop in Combination - Zone 2 | | 2 | UNC1X | USLXX | 154.18 | 252.47 | 157.54 | 44.70 | 11.71 | | | | | | |
| | 4-Wire DS1 Digital Loop in Combination - Zone 3 | | 3 | UNC1X | USLXX | 314.52 | 252.47 | 157.54 | 44.70 | 11.71 | | | | | | |
| | Interoffice Transport - Dedicated - DS1 combination - Per Mile Per Month | | | UNC1X | 1L5XX | 0.18 | | | | | | | | | | |
| | Interoffice Transport - Dedicated - DS1 combination - Facility Termination Per Month | | | UNC1X | U1TF1 | 60.16 | 89.27 | 81.81 | 16.35 | 14.44 | | | | | | |
| | Nonrecurring Currently Combined Network Elements Switch -As-Is Charge | | | UNC1X | UNCCC | | 5.59 | 5.59 | 6.98 | 6.98 | | | | | | |
| **EXTENDED 4-WIRE DS1 DIGITAL EXTENDED LOOP WITH DEDICATED DS3 INTEROFFICE TRANSPORT** | | | | | | | | | | | | | | | | |
| | First DS1Loop in Combination - Zone 1 | | 1 | UNC1X | USLXX | 82.55 | 252.47 | 157.54 | 44.70 | 11.71 | | | | | | |
| | First DS1Loop in Combination - Zone 2 | | 2 | UNC1X | USLXX | 154.18 | 252.47 | 157.54 | 44.70 | 11.71 | | | | | | |
| | First DS1Loop in Combination - Zone 3 | | 3 | UNC1X | USLXX | 314.52 | 252.47 | 157.54 | 44.70 | 11.71 | | | | | | |
| | Interoffice Transport - Dedicated - DS3 combination - Per Mile Per Month | | | UNC3X | 1L5XX | 4.09 | | | | | | | | | | |
| | Interoffice Transport - Dedicated - DS3 - Facility Termination per month | | | UNC3X | U1TF3 | 703.52 | 278.75 | 162.76 | 60.20 | 58.46 | | | | | | |
| | 3/1 Channel System in combination per month | | | UNC3X | MQ3 | 166.13 | 178.14 | 93.97 | 33.26 | 31.83 | | | | | | |
| | DS1 COCI in combination per month | | | UNC1X | UC1D1 | 12.70 | 6.58 | 4.72 | | | | | | | | |
| | Additional DS1Loop in DS3 Interoffice Transport Combination - Zone 1 | | 1 | UNC1X | USLXX | 82.55 | 252.47 | 157.54 | 44.70 | 11.71 | | | | | | |
| | Additional DS1Loop in DS3 Interoffice Transport Combination - Zone 2 | | 2 | UNC1X | USLXX | 154.18 | 252.47 | 157.54 | 44.70 | 11.71 | | | | | | |
| | Additional DS1Loop in DS3 Interoffice Transport Combination - Zone 3 | | 3 | UNC1X | USLXX | 314.52 | 252.47 | 157.54 | 44.70 | 11.71 | | | | | | |
| | Additoinal DS1 COCI in combination per month | | | UNC1X | UC1D1 | 12.70 | 6.58 | 4.72 | | | | | | | | |
| | Nonrecurring Currently Combined Network Elements Switch -As-Is Charge | | | UNC3X | UNCCC | | 5.59 | 5.59 | 6.98 | 6.98 | | | | | | |
| **EXTENDED 2-WIRE VOICE GRADE EXTENDED LOOP/ 2 WIRE VOICE GRADE INTEROFFICE TRANSPORT** | | | | | | | | | | | | | | | | |
| | 2-WireVG Loop in combination - Zone 1 | | 1 | UNCVX | UEAL2 | 14.38 | 88.00 | 55.00 | 47.24 | 7.44 | | | | | | |
| | 2-WireVG Loop in combination - Zone 2 | | 2 | UNCVX | UEAL2 | 22.85 | 88.00 | 55.00 | 47.24 | 7.44 | | | | | | |
| | 2-WireVG Loop in combination - Zone 3 | | 3 | UNCVX | UEAL2 | 36.14 | 88.00 | 55.00 | 47.24 | 7.44 | | | | | | |
| | Interoffice Transport - 2-wire VG - Dedicated- Per Mile Per Month | | | UNCVX | 1L5XX | 0.008838 | | | | | | | | | | |
| | Interoffice Transport - 2-wire VG - Dedicated - Facility Termination per month | | | UNCVX | U1TV2 | 21.13 | 40.54 | 27.41 | 16.74 | 6.90 | | | | | | |

## UNBUNDLED NETWORK ELEMENTS - Alabama

Attachment: 2 | Exhibit: A

| CATEGORY | RATE ELEMENTS | Interim | Zone | BCS | USOC | RATES ($) | | | | | Svc Order Submitted Elec per LSR | Svc Order Submitted Manually per LSR | Incremental Charge - Manual Svc Order vs. Electronic- 1st | Incremental Charge - Manual Svc Order vs. Electronic- Add'l | Incremental Charge - Manual Svc Order vs. Electronic- Disc 1st | Incremental Charge - Manual Svc Order vs. Electronic- Disc Add'l |
|---|---|---|---|---|---|---|---|---|---|---|---|---|---|---|---|---|
| | | | | | | Rec | Nonrecurring | | Nonrecurring Disconnect | | OSS Rates ($) | | | | | |
| | | | | | | | First | Add'l | First | Add'l | SOMEC | SOMAN | SOMAN | SOMAN | SOMAN | SOMAN |
| | Nonrecurring Currently Combined Network Elements Switch -As-Is Charge | | | UNCVX | UNCCC | | 5.59 | 5.59 | 6.98 | 6.98 | | | | | | |
| | **EXTENDED 4-WIRE VOICE GRADE EXTENDED LOOP/ 4 WIRE VOICE GRADE INTEROFFICE TRANSPORT** | | | | | | | | | | | | | | | |
| | 4-WireVG Loop in combination - Zone 1 | | 1 | UNCVX | UEAL4 | 25.34 | 131.97 | 94.51 | 59.14 | 14.50 | | | | | | |
| | 4-WireVG Loop in combination - Zone 2 | | 2 | UNCVX | UEAL4 | 38.58 | 131.97 | 94.51 | 59.14 | 14.50 | | | | | | |
| | 4-WireVG Loop in combination - Zone 3 | | 3 | UNCVX | UEAL4 | 60.02 | 131.97 | 94.51 | 59.14 | 14.50 | | | | | | |
| | Interoffice Transport - 4-wire VG - Dedicated - Per Mile Per Month | | | UNCVX | 1L5XX | 0.008838 | | | | | | | | | | |
| | Interoffice Transport - 4-wire VG - Dedicated - Facility Termination per month | | | UNCVX | U1TV4 | 18.73 | 40.54 | 27.41 | 16.74 | 6.90 | | | | | | |
| | Nonrecurring Currently Combined Network Elements Switch -As-Is Charge | | | UNCVX | UNCCC | | 5.59 | 5.59 | 6.98 | 6.98 | | | | | | |
| | **EXTENDED DS3 DIGITAL EXTENDED LOOP WITH DEDICATED DS3 INTEROFFICE TRANSPORT** | | | | | | | | | | | | | | | |
| | DS3 Local Loop in combination - per mile per month | | | UNC3X | 1L5ND | 8.38 | | | | | | | | | | |
| | DS3 Local Loop in combination - Facility Termination per month | | | UNC3X | UE3PX | 308.98 | 451.52 | 263.94 | 119.49 | 83.58 | | | | | | |
| | Interoffice Transport - Dedicated - DS3 - Per Mile per month | | | UNC3X | 1L5XX | 4.09 | | | | | | | | | | |
| | Interoffice Transport - Dedicated - DS3 combination - Facility Termination per per month | | | UNC3X | U1TF3 | 703.52 | 278.75 | 162.76 | 60.20 | 58.46 | | | | | | |
| | Nonrecurring Currently Combined Network Elements Switch -As-Is Charge | | | UNC3X | UNCCC | | 5.59 | 5.59 | 6.98 | 6.98 | | | | | | |
| | **EXTENDED STS-1 DIGITAL EXTENDED LOOP WITH DEDICATED STS-1 INTEROFFICE TRANSPORT** | | | | | | | | | | | | | | | |
| | STS-1 Local Loip in combination - per mile per month | | | UNCSX | 1L5ND | 8.38 | | | | | | | | | | |
| | STS-1 Local Loop in combination - Facility Termination per month | | | UNCSX | UDLS1 | 319.83 | 451.52 | 263.94 | 119.49 | 83.58 | | | | | | |
| | Interoffice Transport - Dedicated - STS-1 combination - per mile per month | | | UNCSX | 1L5XX | 4.09 | | | | | | | | | | |
| | Interoffice Transport - Dedicated - STS-1 combination - Facility Termination per month | | | UNCSX | U1TFS | 701.37 | 278.75 | 162.76 | 60.20 | 58.46 | | | | | | |
| | Nonrecurring Currently Combined Network Elements Switch -As-Is Charge | | | UNCSX | UNCCC | | 5.59 | 5.59 | 6.98 | 6.98 | | | | | | |
| | **EXTENDED 2-WIRE ISDN EXTENDED LOOP WITH DS1 INTEROFFICE TRANSPORT** | | | | | | | | | | | | | | | |
| | First 2-Wire ISDN Loop in Combination - Zone 1 | | 1 | UNCNX | U1L2X | 21.88 | 117.24 | 79.77 | 52.88 | 10.54 | | | | | | |
| | First 2-Wire ISDN Loop in Combination - Zone 2 | | 2 | UNCNX | U1L2X | 32.85 | 117.24 | 79.77 | 52.88 | 10.54 | | | | | | |
| | First 2-Wire ISDN Loop in Combination - Zone 3 | | 3 | UNCNX | U1L2X | 48.55 | 117.24 | 79.77 | 52.88 | 10.54 | | | | | | |
| | Interoffice Transport - Dedicated - DS1 combination - per mile per month | | | UNC1X | 1L5XX | 0.18 | | | | | | | | | | |
| | Interoffice Transport - Dedicated - DS1 combination - Facility Termination per month | | | UNC1X | U1TF1 | 60.16 | 89.27 | 81.81 | 16.35 | 14.44 | | | | | | |
| | 1/0 Channel System in combination - per month | | | UNC1X | MQ1 | 101.06 | 91.04 | 62.57 | 10.54 | 9.79 | | | | | | |
| | 2-wire ISDN COCI (BRITE) - in combination - per month | | | UNCNX | UC1CA | 2.41 | 6.58 | 4.72 | | | | | | | | |
| | Additional 2-wire ISDN Loop in same DS1Interoffice Transport Combination - Zone 1 | | 1 | UNCNX | U1L2X | 21.88 | 117.24 | 79.77 | 52.88 | 10.54 | | | | | | |
| | Additional 2-wire ISDN Loop in same DS1Interoffice Transport Combination - Zone 2 | | 2 | UNCNX | U1L2X | 32.85 | 117.24 | 79.77 | 52.88 | 10.54 | | | | | | |
| | Additional 2-wire ISDN Loop in same DS1Interoffice Transport Combination - Zone 3 | | 3 | UNCNX | U1L2X | 48.55 | 117.24 | 79.77 | 52.88 | 10.54 | | | | | | |
| | Additional 2-wire ISDN COCI (BRITE) - in combination- per month | | | UNCNX | UC1CA | 2.41 | 6.58 | 4.72 | | | | | | | | |
| | Nonrecurring Currently Combined Network Elements Switch -As-Is Charge | | | UNC1X | UNCCC | | 5.59 | 5.59 | 6.98 | 6.98 | | | | | | |
| | **EXTENDED 4-WIRE DS1 DIGITAL EXTENDED LOOP WITH DEDICATED STS-1 INTEROFFICE TRANSPORT** | | | | | | | | | | | | | | | |
| | First DS1 Loop Combination - Zone 1 | | 1 | UNC1X | USLXX | 82.55 | 252.47 | 157.54 | 44.70 | 11.71 | | | | | | |
| | First DS1 Loop Combination - Zone 2 | | 2 | UNC1X | USLXX | 154.18 | 252.47 | 157.54 | 44.70 | 11.71 | | | | | | |
| | First DS1 Loop Combination - Zone 3 | | 3 | UNC1X | USLXX | 314.52 | 252.47 | 157.54 | 44.70 | 11.71 | | | | | | |
| | Interoffice Transport - Dedicated - STS-1 combination - Per Mile Per Month | | | UNCSX | 1L5XX | 4.09 | | | | | | | | | | |
| | Interoffice Transport - Dedicated - STS-1 combination - Facility Termination per month | | | UNCSX | U1TFS | 701.37 | 278.75 | 162.76 | 60.20 | 58.46 | | | | | | |

## UNBUNDLED NETWORK ELEMENTS - Alabama

| CATEGORY | RATE ELEMENTS | Interim | Zone | BCS | USOC | RATES ($) | | | | | Svc Order Submitted Elec per LSR | Svc Order Submitted Manually per LSR | Attachment: 2 Incremental Charge - Manual Svc Order vs. Electronic-1st | Attachment: 2 Incremental Charge - Manual Svc Order vs. Electronic-Add'l | Exhibit: A Incremental Charge - Manual Svc Order vs. Electronic-Disc 1st | Exhibit: A Incremental Charge - Manual Svc Order vs. Electronic-Disc Add'l |
|---|---|---|---|---|---|---|---|---|---|---|---|---|---|---|---|---|
| | | | | | | Rec | Nonrecurring | | Nonrecurring Disconnect | | OSS Rates ($) | | | | | |
| | | | | | | | First | Add'l | First | Add'l | SOMEC | SOMAN | SOMAN | SOMAN | SOMAN | SOMAN |
| | 3/1 Channel System in combination per month | | | UNCSX | MQ3 | 166.13 | 178.14 | 93.97 | 33.26 | 31.83 | | | | | | |
| | DS1 COCI in combination per month | | | UNC1X | UC1D1 | 12.70 | 6.58 | 4.72 | | | | | | | | |
| | Additional DS1Loop in the same STS-1 Interoffice Transport Combination - Zone 1 | | 1 | UNC1X | USLXX | 82.55 | 252.47 | 157.54 | 44.70 | 11.71 | | | | | | |
| | Additional DS1Loop in the same STS-1 Interoffice Transport Combination - Zone 2 | | 2 | UNC1X | USLXX | 154.18 | 252.47 | 157.54 | 44.70 | 11.71 | | | | | | |
| | Additional DS1Loop in the same STS-1 Interoffice Transport Combination - Zone 3 | | 3 | UNC1X | USLXX | 314.52 | 252.47 | 157.54 | 44.70 | 11.71 | | | | | | |
| | DS1 COCI in combination per month | | | UNC1X | UC1D1 | 12.70 | 6.58 | 4.72 | | | | | | | | |
| | Nonrecurring Currently Combined Network Elements Switch -As-Is Charge | | | UNCSX | UNCCC | | 5.59 | 5.59 | 6.98 | 6.98 | | | | | | |
| | **EXTENDED 4-WIRE 56 KBPS DIGITAL EXTENDED LOOP WITH 56 KBPS INTEROFFICE TRANSPORT** | | | | | | | | | | | | | | | |
| | 4-wire 56 kbps Local Loop in combination - Zone 1 | | 1 | UNCDX | UDL56 | 26.09 | 126.27 | 88.80 | 59.14 | 14.50 | | | | | | |
| | 4-wire 56 kbps Local Loop in combination - Zone 2 | | 2 | UNCDX | UDL56 | 35.95 | 126.27 | 88.80 | 59.14 | 14.50 | | | | | | |
| | 4-wire 56 kbps Local Loop in combination - Zone 3 | | 3 | UNCDX | UDL56 | 37.88 | 126.27 | 88.80 | 59.14 | 14.50 | | | | | | |
| | Interoffice Transport - Dedicated - 4-wire 56 kbps combination - Per Mile per month | | | UNCDX | 1L5XX | 0.008838 | | | | | | | | | | |
| | Interoffice Transport - Dedicated - 4-wire 56 kbps combination - Facility Termination per month | | | UNCDX | U1TD5 | 15.12 | 40.54 | 27.41 | 16.74 | 6.90 | | | | | | |
| | Nonrecurring Currently Combined Network Elements Switch -As-Is Charge | | | UNCDX | UNCCC | | 5.59 | 5.59 | 6.98 | 6.98 | | | | | | |
| | **EXTENDED 4-WIRE 64 KBPS DIGITAL EXTENDED LOOP WITH 64 KBPS INTEROFFICE TRANSPORT** | | | | | | | | | | | | | | | |
| | 4-wire 64 kbps Lcoal Loop in Combination - Zone 1 | | 1 | UNCDX | UDL64 | 26.09 | 126.27 | 88.80 | 59.14 | 14.50 | | | | | | |
| | 4-wire 64 kbps Lcoal Loop in Combination - Zone 2 | | 2 | UNCDX | UDL64 | 35.95 | 126.27 | 88.80 | 59.14 | 14.50 | | | | | | |
| | 4-wire 64 kbps Lcoal Loop in Combination - Zone 3 | | 3 | UNCDX | UDL64 | 37.88 | 126.27 | 88.80 | 59.14 | 14.50 | | | | | | |
| | Interoffice Transport - Dedicated - 4-wire 64 kbps combination - Per Mile per month | | | UNCDX | 1L5XX | 0.008838 | | | | | | | | | | |
| | Interoffice Transport - Dedicated - 4-wire 64 kbps combination - Facility Termination per month | | | UNCDX | U1TD6 | 15.12 | 40.54 | 27.41 | 16.74 | 6.90 | | | | | | |
| | Nonrecurring Currently Combined Network Elements Switch -As-Is Charge | | | UNCDX | UNCCC | | 5.59 | 5.59 | 6.98 | 6.98 | | | | | | |
| | **EXTENDED 2-WIRE VOICE GRADE LOOP WITH DS1 INTEROFFICE TRANSPORT w/ 3/1 MUX** | | | | | | | | | | | | | | | |
| | First 2-wire VG Loop (SL2) in Combination - Zone 1 | | 1 | UNCVX | UEAL2 | 14.38 | 88.00 | 55.00 | 47.24 | 7.44 | | | | | | |
| | First 2-wire VG Loop (SL2) in Combination - Zone 2 | | 2 | UNCVX | UEAL2 | 22.85 | 88.00 | 55.00 | 47.24 | 7.44 | | | | | | |
| | First 2-wire VG Loop (SL2) in Combination - Zone 3 | | 3 | UNCVX | UEAL2 | 36.14 | 88.00 | 55.00 | 47.24 | 7.44 | | | | | | |
| | First Interoffice Transport - Dedicated - DS1 combination - Per Mile | | | UNC1X | 1L5XX | 0.18 | | | | | | | | | | |
| | First Interoffice Transport - Dedicated - DS1 combination - Facility Termination per month | | | UNC1X | U1TF1 | 60.16 | 89.27 | 81.81 | 16.35 | 14.44 | | | | | | |
| | Per each DS1 Channelization System Per Month | | | UNC1X | MQ1 | 101.06 | 91.04 | 62.57 | 10.54 | 9.79 | | | | | | |
| | Per each Voice Grade COCI - Per Month per month | | | UNCVX | 1D1VG | 0.53 | 6.58 | 4.72 | | | | | | | | |
| | 3/1 Channel System in combination per month | | | UNC3X | MQ3 | 166.13 | 178.14 | 93.97 | 33.26 | 31.83 | | | | | | |
| | Per each DS1 COCI in combination per month | | | UNC1X | UC1D1 | 12.70 | 6.58 | 4.72 | | | | | | | | |
| | Each Additional 2-Wire VG Loop(SL 2) in the same DS1 Interoffice Transport Combination - Zone 1 | | 1 | UNCVX | UEAL2 | 14.38 | 88.00 | 55.00 | 47.24 | 7.44 | | | | | | |
| | Each Additional 2-Wire VG Loop(SL2) in the same DS1 Interoffice Transport Combination - Zone 2 | | 2 | UNCVX | UEAL2 | 22.85 | 88.00 | 55.00 | 47.24 | 7.44 | | | | | | |
| | Each Additional 2-Wire VG Loop(SL2) in the same DS1 Interoffice Transport Combination - Zone 3 | | 3 | UNCVX | UEAL2 | 36.14 | 88.00 | 55.00 | 47.24 | 7.44 | | | | | | |
| | Each Additional Voice Grade COCI - in combination - per month | | | UNCVX | 1D1VG | 0.53 | 6.58 | 4.72 | | | | | | | | |
| | Each Additional DS1 Interoffice Channel per mile in same 3/1 Channel System per month | | | UNC1X | 1L5XX | 0.18 | | | | | | | | | | |
| | Each Additional DS1 Interoffice Channel Facility Termination in same 3/1 Channel System per month | | | UNC1X | U1TF1 | 60.16 | 89.27 | 81.81 | 16.35 | 14.44 | | | | | | |
| | Each Additional DS1 COCI combination per month | | | UNC1X | UC1D1 | 12.70 | 6.58 | 4.72 | | | | | | | | |
| | Nonrecurring Currently Combined Network Elements Switch -As-Is Charge | | | UNC1X | UNCCC | | 5.59 | 5.59 | 6.98 | 6.98 | | | | | | |
| | **EXTENDED 4-WIRE VOICE GRADE LOOP WITH DEDICATED DS1 INTEROFFICE TRANSPORT w/ 3/1 MUX** | | | | | | | | | | | | | | | |

## UNBUNDLED NETWORK ELEMENTS - Alabama

| CATEGORY | RATE ELEMENTS | Interim | Zone | BCS | USOC | RATES ($) | | | | | Svc Order Submitted Elec per LSR | Svc Order Submitted Manually per LSR | Attachment: 2 Incremental Charge - Manual Svc Order vs. Electronic- 1st | Attachment: 2 Incremental Charge - Manual Svc Order vs. Electronic- Add'l | Exhibit: A Incremental Charge - Manual Svc Order vs. Electronic- Disc 1st | Exhibit: A Incremental Charge - Manual Svc Order vs. Electronic- Disc Add'l |
|---|---|---|---|---|---|---|---|---|---|---|---|---|---|---|---|---|
| | | | | | | Rec | Nonrecurring | | Nonrecurring Disconnect | | OSS Rates ($) | | | | | |
| | | | | | | | First | Add'l | First | Add'l | SOMEC | SOMAN | SOMAN | SOMAN | SOMAN | SOMAN |
| | First 4-Wire Analog Voice Grade Local Loop in Combination - Zone 1 | | 1 | UNCVX | UEAL4 | 25.34 | 131.97 | 94.51 | 59.14 | 14.50 | | | | | | |
| | First 4-Wire Analog Voice Grade Local Loop in Combination - Zone 2 | | 2 | UNCVX | UEAL4 | 38.58 | 131.97 | 94.51 | 59.14 | 14.50 | | | | | | |
| | First 4-Wire Analog Voice Grade Local Loop in Combination - Zone 3 | | 3 | UNCVX | UEAL4 | 60.02 | 131.97 | 94.51 | 59.14 | 14.50 | | | | | | |
| | First Interoffice Transport - Dedicated - DS1 combination - Per Mile Per Month | | | UNC1X | 1L5XX | 0.18 | | | | | | | | | | |
| | First Interoffice Transport - Dedicated - DS1 - Facility Termination Per Month | | | UNC1X | U1TF1 | 60.16 | 89.27 | 81.81 | 16.35 | 14.44 | | | | | | |
| | Per each 1/0 Channel System in combination Per Month | | | UNC1X | MQ1 | 101.06 | 91.04 | 62.57 | 10.54 | 9.79 | | | | | | |
| | Per each Voice Grade COCI in combination - per month | | | UNCVX | 1D1VG | 0.53 | 6.58 | 4.72 | | | | | | | | |
| | 3/1 Channel System in combination per month | | | UNC3X | MQ3 | 166.13 | 178.14 | 93.97 | 33.26 | 31.83 | | | | | | |
| | Per each DS1 COCI in combination per month | | | UNC1X | UC1D1 | 12.70 | 6.58 | 4.72 | | | | | | | | |
| | Additional 4-Wire Analog Voice Grade Loop in same DS1 Interoffice Transport Combination - Zone 1 | | 1 | UNCVX | UEAL4 | 25.34 | 131.97 | 94.51 | 59.14 | 14.50 | | | | | | |
| | Additional 4-Wire Analog Voice Grade Loop in same DS1 Interoffice Transport Combination - Zone 2 | | 2 | UNCVX | UEAL4 | 38.58 | 131.97 | 94.51 | 59.14 | 14.50 | | | | | | |
| | Additional 4-Wire Analog Voice Grade Loop in same DS1 Interoffice Transport Combination - Zone 3 | | 3 | UNCVX | UEAL4 | 60.02 | 131.97 | 94.51 | 59.14 | 14.50 | | | | | | |
| | Each Additional DS1 Interoffice Channel per mile in same 3/1 Channel System per month | | | UNC1X | 1L5XX | 0.18 | | | | | | | | | | |
| | Each Additional DS1 Interoffice Channel Facility Termination in same 3/1 Channel System per month | | | UNC1X | U1TF1 | 60.16 | 89.27 | 81.81 | 16.35 | 14.44 | | | | | | |
| | Additional Voice Grade COCI - in combination - per month | | | UNCVX | 1D1VG | 0.53 | 6.58 | 4.72 | | | | | | | | |
| | Nonrecurring Currently Combined Network Elements Switch -As-Is Charge | | | UNC1X | UNCCC | | 5.59 | 5.59 | 6.98 | 6.98 | | | | | | |
| | **EXTENDED 4-WIRE 56 KBPS DIGITAL LOOP WITH DEDICATED DS1 INTEROFFICE TRANSPORT w/ 3/1 MUX** | | | | | | | | | | | | | | | |
| | First 4-Wire 56Kbps Digital Grade Local Loop in Combination - Zone 1 | | 1 | UNCDX | UDL56 | 26.09 | 126.27 | 88.80 | 59.14 | 14.50 | | | | | | |
| | First 4-Wire 56Kbps Digital Grade Local Loop in Combination - Zone 2 | | 2 | UNCDX | UDL56 | 35.95 | 126.27 | 88.80 | 59.14 | 14.50 | | | | | | |
| | First 4-Wire 56Kbps Digital Grade Local Loop in Combination - Zone 3 | | 3 | UNCDX | UDL56 | 37.88 | 126.27 | 88.80 | 59.14 | 14.50 | | | | | | |
| | First Interoffice Transport - Dedicated - DS1 combination - Per Mile Per Month | | | UNC1X | 1L5XX | 0.18 | | | | | | | | | | |
| | First Interoffice Transport - Dedicated - DS1 - combination Facility Termination Per Month | | | UNC1X | U1TF1 | 60.16 | 89.27 | 81.81 | 16.35 | 14.44 | | | | | | |
| | Per each 1/0 Channel System in combination Per Month | | | UNC1X | MQ1 | 101.06 | 91.04 | 62.57 | 10.54 | 9.79 | | | | | | |
| | Per each OCU-DP COCI (data) COCI per month (2.4-64kbs) | | | UNCDX | 1D1DD | 1.12 | 6.58 | 4.72 | | | | | | | | |
| | 3/1 Channel System in combination per month | | | UNC3X | MQ3 | 166.13 | 178.14 | 93.97 | 33.26 | 31.83 | | | | | | |
| | Per each DS1 COCI in combination per month | | | UNC1X | UC1D1 | 12.70 | 6.58 | 4.72 | | | | | | | | |
| | Additional 4-Wire 56Kbps Digital Grade Loop in same DS1 Interoffice Transport Combination - Zone 1 | | 1 | UNCDX | UDL56 | 26.09 | 126.27 | 88.80 | 59.14 | 14.50 | | | | | | |
| | Additional 4-Wire 56Kbps Digital Grade Loop in same DS1 Interoffice Transport Combination - Zone 2 | | 2 | UNCDX | UDL56 | 35.95 | 126.27 | 88.80 | 59.14 | 14.50 | | | | | | |
| | Additional 4-Wire 56Kbps Digital Grade Loop in same DS1 Interoffice Transport Combination - Zone 3 | | 3 | UNCDX | UDL56 | 37.88 | 126.27 | 88.80 | 59.14 | 14.50 | | | | | | |
| | OCU-DP COCI (data) COCI in combination per month (2.4-64kbs) | | | UNCDX | 1D1DD | 1.12 | 6.58 | 4.72 | | | | | | | | |
| | Each Additional DS1 Interoffice Channel per mile in same 3/1 Channel System per month | | | UNC1X | 1L5XX | 0.18 | | | | | | | | | | |
| | Each Additional DS1 Interoffice Channel Facility Termination in same 3/1 Channel System per month | | | UNC1X | U1TF1 | 60.16 | 89.27 | 81.81 | 16.35 | 14.44 | | | | | | |
| | Each Additional DS1 COCI in the same 3/1 channel system combination per month | | | UNC1X | UC1D1 | 12.70 | 6.58 | 4.72 | | | | | | | | |
| | Nonrecurring Currently Combined Network Elements Switch -As-Is Charge | | | UNC1X | UNCCC | | 5.59 | 5.59 | 6.98 | 6.98 | | | | | | |
| | **EXTENDED 4-WIRE 64 KBPS DIGITAL LOOP WITH DEDICATED DS1 INTEROFFICE TRANSPORT w/ 3/1 MUX** | | | | | | | | | | | | | | | |

## UNBUNDLED NETWORK ELEMENTS - Alabama

| CATEGORY | | RATE ELEMENTS | Interim | Zone | BCS | USOC | RATES ($) | | | | | Svc Order Submitted Elec per LSR | Svc Order Submitted Manually per LSR | Attachment: 2 Incremental Charge - Manual Svc Order vs. Electronic-1st | Attachment: 2 Incremental Charge - Manual Svc Order vs. Electronic-Add'l | Exhibit: A Incremental Charge - Manual Svc Order vs. Electronic-Disc 1st | Exhibit: A Incremental Charge - Manual Svc Order vs. Electronic-Disc Add'l |
|---|---|---|---|---|---|---|---|---|---|---|---|---|---|---|---|---|---|
| | | | | | | | Rec | Nonrecurring | | Nonrecurring Disconnect | | OSS Rates ($) | | | | | |
| | | | | | | | | First | Add'l | First | Add'l | SOMEC | SOMAN | SOMAN | SOMAN | SOMAN | SOMAN |
| | | First 4-Wire 64Kbps Digital Grade Loop in a DS1 Interoffice Transport Combination - Zone 1 | | 1 | UNCDX | UDL64 | 26.09 | 126.27 | 88.80 | 59.14 | 14.50 | | | | | | |
| | | First 4-Wire 64Kbps Digital Grade Loop in a DS1 Interoffice Transport Combination - Zone 2 | | 2 | UNCDX | UDL64 | 35.95 | 126.27 | 88.80 | 59.14 | 14.50 | | | | | | |
| | | First 4-Wire 64Kbps Digital Grade Loop in a DS1 Interoffice Transport Combination - Zone 3 | | 3 | UNCDX | UDL64 | 37.88 | 126.27 | 88.80 | 59.14 | 14.50 | | | | | | |
| | | First Interoffice Transport - Dedicated - DS1 combination - Per Mile Per Month | | | UNC1X | 1L5XX | 0.18 | | | | | | | | | | |
| | | First Interoffice Transport - Dedicated - DS1 combination - Facility Termination Per Month | | | UNC1X | U1TF1 | 60.16 | 89.27 | 81.81 | 16.35 | 14.44 | | | | | | |
| | | Per each Channel System 1/0 in combination Per Month | | | UNC1X | MQ1 | 101.06 | 91.04 | 62.57 | 10.54 | 9.79 | | | | | | |
| | | Per each OCU-DP COCI (data) in combination - per month (2.4-64kbs) | | | UNCDX | 1D1DD | 1.12 | 6.58 | 4.72 | | | | | | | | |
| | | 3/1 Channel System in combination per month | | | UNC3X | MQ3 | 166.13 | 178.14 | 93.97 | 33.26 | 31.83 | | | | | | |
| | | Per each DS1 COCI in combination per month | | | UNC1X | UC1D1 | 12.70 | 6.58 | 4.72 | | | | | | | | |
| | | Additional 4-Wire 64Kbps Digital Grade Loop in same DS1 Interoffice Transport Combination - Zone 1 | | 1 | UNCDX | UDL64 | 26.09 | 126.27 | 88.80 | 59.14 | 14.50 | | | | | | |
| | | Additional 4-Wire 64Kbps Digital Grade Loop in same DS1 Interoffice Transport Combination - Zone 2 | | 2 | UNCDX | UDL64 | 35.95 | 126.27 | 88.80 | 59.14 | 14.50 | | | | | | |
| | | Additional 4-Wire 64Kbps Digital Grade Loop in same DS1 Interoffice Transport Combination - Zone 3 | | 3 | UNCDX | UDL64 | 37.88 | 126.27 | 88.80 | 59.14 | 14.50 | | | | | | |
| | | Additional OCU-DP COCI (data) - DS1 to DS0 Channel System combination - per month (2.4-64kbs) | | | UNCDX | 1D1DD | 1.12 | 6.58 | 4.72 | | | | | | | | |
| | | Each Additional DS1 Interoffice Channel per mile in same 3/1 Channel System per month | | | UNC1X | 1L5XX | 0.18 | | | | | | | | | | |
| | | Each Additional DS1 Interoffice Channel Facility Termination in same 3/1 Channel System per month | | | UNC1X | U1TF1 | 60.16 | 89.27 | 81.81 | 16.35 | 14.44 | | | | | | |
| | | Each Additional DS1 COCI in the same 3/1 channel system combination per month | | | UNC1X | UC1D1 | 12.70 | 6.58 | 4.72 | | | | | | | | |
| | | Nonrecurring Currently Combined Network Elements Switch -As-Is Charge | | | UNC1X | UNCCC | | 5.59 | 5.59 | 6.98 | 6.98 | | | | | | |
| | **EXTENDED 2-WIRE ISDN LOOP WITH DS1 INTEROFFICE TRANSPORT w/ 3/1 MUX** | | | | | | | | | | | | | | | | |
| | | First 2-Wire ISDN Loop in a DS1 Interoffice Combination Transport - Zone 1 | | 1 | UNCNX | U1L2X | 21.88 | 117.24 | 79.77 | 52.88 | 10.54 | | | | | | |
| | | First 2-Wire ISDN Loop in a DS1 Interoffice Combination Transport - Zone 2 | | 2 | UNCNX | U1L2X | 32.85 | 117.24 | 79.77 | 52.88 | 10.54 | | | | | | |
| | | First 2-Wire ISDN Loop in a DS1 Interoffice Combination Transport - Zone 3 | | 3 | UNCNX | U1L2X | 48.55 | 117.24 | 79.77 | 52.88 | 10.54 | | | | | | |
| | | First Interoffice Transport - Dedicated - DS1 combination - Per Mile per month | | | UNC1X | 1L5XX | 0.18 | | | | | | | | | | |
| | | First Interoffice Transport - Dedicated - DS1 combination - Facility Termination per month | | | UNC1X | U1TF1 | 60.16 | 89.27 | 81.81 | 16.35 | 14.44 | | | | | | |
| | | Per each Channel System 1/0 in combination - per month | | | UNC1X | MQ1 | 101.06 | 91.04 | 62.57 | 10.54 | 9.79 | | | | | | |
| | | Per each 2-wire ISDN COCI (BRITE) in combination - per month | | | UNCNX | UC1CA | 2.41 | 6.58 | 4.72 | | | | | | | | |
| | | 3/1 Channel System in combination per month | | | UNC3X | MQ3 | 166.13 | 178.14 | 93.97 | 33.26 | 31.83 | | | | | | |
| | | Per each DS1 COCI in combination per month | | | UNC1X | UC1D1 | 12.70 | 6.58 | 4.72 | | | | | | | | |
| | | Additional 2-wire ISDN Loop in same DS1Interoffice Transport Combination - Zone 1 | | 1 | UNCNX | U1L2X | 21.88 | 117.24 | 79.77 | 52.88 | 10.54 | | | | | | |
| | | Additional 2-wire ISDN Loop in same DS1Interoffice Transport Combination - Zone 2 | | 2 | UNCNX | U1L2X | 32.85 | 117.24 | 79.77 | 52.88 | 10.54 | | | | | | |
| | | Additional 2-wire ISDN Loop in same DS1Interoffice Transport Combination - Zone 3 | | 3 | UNCNX | U1L2X | 48.55 | 117.24 | 79.77 | 52.88 | 10.54 | | | | | | |
| | | Additional 2-wire ISDN COCI (BRITE) in same 1/0 channel system combination- per month | | | UNCNX | UC1CA | 2.41 | 6.58 | 4.72 | | | | | | | | |
| | | Each Additional DS1 Interoffice Channel per mile in same 3/1 Channel System per month | | | UNC1X | 1L5XX | 0.18 | | | | | | | | | | |
| | | Each Additional DS1 Interoffice Channel Facility Termination in same 3/1 Channel System per month | | | UNC1X | U1TF1 | 60.16 | 89.27 | 81.81 | 16.35 | 14.44 | | | | | | |

| UNBUNDLED NETWORK ELEMENTS - Alabama | | | | | | | | | | | | | Attachment: 2 | | Exhibit: A | |
|---|---|---|---|---|---|---|---|---|---|---|---|---|---|---|---|---|
| CATEGORY | RATE ELEMENTS | Interim | Zone | BCS | USOC | RATES ($) | | | | | Svc Order Submitted Elec per LSR | Svc Order Submitted Manually per LSR | Incremental Charge - Manual Svc Order vs. Electronic-1st | Incremental Charge - Manual Svc Order vs. Electronic-Add'l | Incremental Charge - Manual Svc Order vs. Electronic-Disc 1st | Incremental Charge - Manual Svc Order vs. Electronic-Disc Add'l |
| | | | | | | Rec | Nonrecurring | | Nonrecurring Disconnect | | OSS Rates ($) | | | | | |
| | | | | | | | First | Add'l | First | Add'l | SOMEC | SOMAN | SOMAN | SOMAN | SOMAN | SOMAN |
| | Each Additional DS1 COCI in the same 3/1 channel system combination per month | | | UNC1X | UC1D1 | 12.70 | 6.58 | 4.72 | | | | | | | | |
| | Nonrecurring Currently Combined Network Elements Switch -As-Is Charge | | | UNC1X | UNCCC | | 5.59 | 5.59 | 6.98 | 6.98 | | | | | | |
| | **EXTENDED 4-WIRE DS1 LOOP WITH DEDICATED DS1 INTEROFFICE TRANSPORT w/ 3/1 MUX** | | | | | | | | | | | | | | | |
| | First 4-wire DS1 Digital Lcoal Loop in Combination - Zone 1 | | 1 | UNC1X | USLXX | 82.55 | 252.47 | 157.54 | 44.70 | 11.71 | | | | | | |
| | First 4-wire DS1 Digital Lcoal Loop in Combination - Zone 2 | | 2 | UNC1X | USLXX | 154.18 | 252.47 | 157.54 | 44.70 | 11.71 | | | | | | |
| | First 4-wire DS1 Digital Lcoal Loop in Combination - Zone 3 | | 3 | UNC1X | USLXX | 314.52 | 252.47 | 157.54 | 44.70 | 11.71 | | | | | | |
| | First Interoffice Transport - Dedicated - DS1 combination - Per Mile Per Month | | | UNC1X | 1L5XX | 0.18 | | | | | | | | | | |
| | First Interoffice Transport - Dedicated - DS1 combination - Facility Termination Per Month | | | UNC1X | U1TF1 | 60.16 | 89.27 | 81.81 | 16.35 | 14.44 | | | | | | |
| | 3/1 Channel System in combination per month | | | UNC3X | MQ3 | 166.13 | 178.14 | 93.97 | 33.26 | 31.83 | | | | | | |
| | Per each DS1 COCI combination per month | | | UNC1X | UC1D1 | 12.70 | 6.58 | 4.72 | | | | | | | | |
| | Each Additional DS1 Interoffice Channel per mile in same 3/1 Channel System per month | | | UNC1X | 1L5XX | 0.18 | | | | | | | | | | |
| | Each Additional DS1 Interoffice Channel Facility Termination in same 3/1 Channel System per month | | | UNC1X | U1TF1 | 60.16 | 89.27 | 81.81 | 16.35 | 14.44 | | | | | | |
| | Each Additional DS1 COCI in the same 3/1 channel system combination per month | | | UNC1X | UC1D1 | 12.70 | 6.58 | 4.72 | | | | | | | | |
| | Additional 4-Wire DS1 Digital Local Loop in Combination - Zone 1 | | 1 | UNC1X | USLXX | 82.55 | 252.47 | 157.54 | 44.70 | 11.71 | | | | | | |
| | Additional 4-Wire DS1 Digital Local Loop in Combination - Zone 2 | | 2 | UNC1X | USLXX | 154.18 | 252.47 | 157.54 | 44.70 | 11.71 | | | | | | |
| | Additional 4-Wire DS1 Digital Local Loop in Combination - Zone 3 | | 3 | UNC1X | USLXX | 314.52 | 252.47 | 157.54 | 44.70 | 11.71 | | | | | | |
| | Nonrecurring Currently Combined Network Elements Switch -As-Is Charge | | | UNC1X | UNCCC | | 5.59 | 5.59 | 6.98 | 6.98 | | | | | | |
| | **EXTENDED 4-WIRE 56 KBPS DIGITAL EXTENDED LOOP WITH DS0 INTEROFFICE TRANSPORT** | | | | | | | | | | | | | | | |
| | First 4-wire 56 kbps Local Loop in combination - Zone 1 | | 1 | UNCDX | UDL56 | 26.09 | 126.27 | 88.80 | 59.14 | 14.50 | | | | | | |
| | First 4-wire 56 kbps Local Loop in combination - Zone 2 | | 2 | UNCDX | UDL56 | 35.95 | 126.27 | 88.80 | 59.14 | 14.50 | | | | | | |
| | First 4-wire 56 kbps Local Loop in combination - Zone 3 | | 3 | UNCDX | UDL56 | 37.88 | 126.27 | 88.80 | 59.14 | 14.50 | | | | | | |
| | First 4-wiree 56 kbps Interoffice Transport - Dedicated - Per Mile per month | | | UNCDX | 1L5XX | 0.008838 | | | | | | | | | | |
| | First 4-wire 56 kbps Interoffice Transport - Dedicated - Facility Termination per month | | | UNCDX | U1TD5 | 15.12 | 40.54 | 27.41 | 16.74 | 6.90 | | | | | | |
| | Nonrecurring Currently Combined Network Elements Switch -As-Is Charge | | | UNCDX | UNCCC | | 5.59 | 5.59 | 6.98 | 6.98 | | | | | | |
| | **EXTENDED 4-WIRE 64 KBPS DIGITAL EXTENDED LOOP WITH DS0 INTEROFFICE TRANSPORT** | | | | | | | | | | | | | | | |
| | First 4-wire 64 kbps Local Loop in combination - Zone 1 | | 1 | UNCDX | UDL64 | 26.09 | 126.27 | 88.80 | 59.14 | 14.50 | | | | | | |
| | First 4-wire 64 kbps Local Loop in combination - Zone 2 | | 2 | UNCDX | UDL64 | 35.95 | 126.27 | 88.80 | 59.14 | 14.50 | | | | | | |
| | First 4-wire 64 kbps Local Loop in combination - Zone 3 | | 3 | UNCDX | UDL64 | 37.88 | 126.27 | 88.80 | 59.14 | 14.50 | | | | | | |
| | First I4-wire 65 kbps Interoffice Transport - Dedicated - Per Mile per month | | | UNCDX | 1L5XX | 0.008838 | | | | | | | | | | |
| | First 4-wire 64 kbps Interoffice Transport - Dedicated - Facility Termination per month | | | UNCDX | U1TD6 | 15.12 | 40.54 | 27.41 | 16.74 | 6.90 | | | | | | |
| | Nonrecurring Currently Combined Network Elements Switch -As-Is Charge | | | UNCDX | UNCCC | | 5.59 | 5.59 | 6.98 | 6.98 | | | | | | |
| **ADDITIONAL NETWORK ELEMENTS** | | | | | | | | | | | | | | | | |
| | **When used as a part of a currently combined facility, the non-recurrng charges do not apply, but a Switch As Is charge does apply.** | | | | | | | | | | | | | | | |
| | **When used as ordinarily combined network elements in All States, the non-recurring charges apply and the Switch As Is Charge does not.** | | | | | | | | | | | | | | | |
| | **Nonrecurring Currently Combined Network Elements "Switch As Is" Charge (One applies to each combination)** | | | | | | | | | | | | | | | |
| | Nonrecurring Currently Combined Network Elements Switch -As-Is Charge - 2 wire/4-Wire VG | | | UNCVX | UNCCC | | 5.59 | 5.59 | 6.98 | 6.98 | | | | | | |
| | Nonrecurring Currently Combined Network Elements Switch -As-Is Charge - 56/64 kbps | | | UNCDX | UNCCC | | 5.59 | 5.59 | 6.98 | 6.98 | | | | | | |
| | Nonrecurring Currently Combined Network Elements Switch -As-Is Charge - DS1 | | | UNC1X | UNCCC | | 5.59 | 5.59 | 6.98 | 6.98 | | | | | | |

| UNBUNDLED NETWORK ELEMENTS - Alabama | | | | | | | | | | | | | | Attachment: 2 | | Exhibit: A | |
|---|---|---|---|---|---|---|---|---|---|---|---|---|---|---|---|---|---|
| CATEGORY | RATE ELEMENTS | Interim | Zone | BCS | USOC | RATES ($) | | | | | Svc Order Submitted Elec per LSR | Svc Order Submitted Manually per LSR | Incremental Charge - Manual Svc Order vs. Electronic-1st | Incremental Charge - Manual Svc Order vs. Electronic-Add'l | Incremental Charge - Manual Svc Order vs. Electronic-Disc 1st | Incremental Charge - Manual Svc Order vs. Electronic-Disc Add'l |
| | | | | | | Rec | Nonrecurring | | Nonrecurring Disconnect | | OSS Rates ($) | | | | | |
| | | | | | | | First | Add'l | First | Add'l | SOMEC | SOMAN | SOMAN | SOMAN | SOMAN | SOMAN |
| | Nonrecurring Currently Combined Network Elements Switch -As-Is Charge - DS3 | | | UNC3X | UNCCC | | 5.59 | 5.59 | 6.98 | 6.98 | | | | | | |
| | Nonrecurring Currently Combined Network Elements Switch -As-Is Charge - STS1 | | | UNCSX | UNCCC | | 5.59 | 5.59 | 6.98 | 6.98 | | | | | | |
| | **Optional Features & Functions:** | | | | | | | | | | | | | | | |
| | Clear Channel Capability Extended Frame Option - per DS1 | I | | U1TD1, ULDD1,UNC1X | CCOEF | | 0I | 0I | 0I | 0I | | | | | | |
| | Clear Channel Capability Super FrameOption - per DS1 | I | | U1TD1, ULDD1,UNC1X | CCOSF | | 0I | 0I | 0I | 0I | | | | | | |
| | Clear Channel Capability (SF/ESF) Option - Subsequent Activity - per DS1 | I | | ULDD1, U1TD1, UNC1X, USL | NRCCC | | 184.85S | 23.81S | 1.99S | 0.7741S | | | | | | |
| | C-bit Parity Option - Subsequent Activity - per DS3 | I | | U1TD3, ULDD3, UE3, UNC3X | NRCC3 | | 219.13S | 7.67S | 0.7355S | 0S | | | | | | |
| | **MULTIPLEXERS** | | | | | | | | | | | | | | | |
| | DS1 to DS0 Channel System per month | | | UNC1X | MQ1 | 101.06 | 91.04 | 62.57 | 10.54 | 9.79 | | | | | | |
| | OCU-DP COCI (data) - DS1 to DS0 Channel System - per month (2.4-64kbs) used for a Local Loop | | | UDL | 1D1DD | 1.12 | 6.58 | 4.72 | 0.00 | 0.00 | | | | | | |
| | OCU-DP COCI (data) - DS1 to DS0 Channel System - per month (2.4-64kbs) used for connection to a channelized DS1 Local Channel in the same SWC as collocation | | | U1TUD | 1D1DD | 1.12 | 6.58 | 4.72 | 0.00 | 0.00 | | | | | | |
| | 2-wire ISDN COCI (BRITE) - DS1 to DS0 Channel Systsem - per month for a Local Loop | | | UDN | UC1CA | 2.41 | 6.58 | 4.72 | 0.00 | 0.00 | | | | | | |
| | 2-wire ISDN COCI (BRITE) - DS1 to DS0 Channel Systsem - per month used for connection to a channelized DS1 Local Channel in the same SWC as collocation | | | U1TUB | UC1CA | 2.41 | 6.58 | 4.72 | 0.00 | 0.00 | | | | | | |
| | Voice Grade COCI - DS1 to DS0 Channel System - per month used for a Local Loop | | | UEA | 1D1VG | 0.53 | 6.58 | 4.72 | 0.00 | 0.00 | | | | | | |
| | Voice Grade COCI - DS1 to DS0 Channel System - per month used for connection to a channelized DS1 Local Channel in the same SWC as collocation | | | U1TUC | 1D1VG | 0.53 | 6.58 | 4.72 | 0.00 | 0.00 | | | | | | |
| | DS3 to DS1 Channel System per month | | | UNC3X | MQ3 | 166.13 | 178.14 | 93.97 | 33.26 | 31.83 | | | | | | |
| | STS-1 to DS1 Channel System per month | | | UNCSX | MQ3 | 166.13 | 178.14 | 93.97 | 33.26 | 31.83 | | | | | | |
| | DS1 COCI used with Loop per month | | | USL | UC1D1 | 12.70 | 6.58 | 4.72 | 0.00 | 0.00 | | | | | | |
| | DS1 COCI (used for connection to a channelized DS1 Local Channel in the same SWC as collocation) per month | | | U1TUA | UC1D1 | 12.70 | 6.58 | 4.72 | 0.00 | 0.00 | | | | | | |
| | DS1 COCI used with Interoffice Channel per month | | | U1TD1 | UC1D1 | 12.70 | 6.58 | 4.72 | 0.00 | 0.00 | | | | | | |
| | DS3 Interface Unit (DS1 COCI) used with Local Channel per month | | | ULDD1 | UC1D1 | 12.70 | 6.58 | 4.72 | 0.00 | 0.00 | | | | | | |
| **UNBUNDLED LOCAL EXCHANGE SWITCHING(PORTS)** | | | | | | | | | | | | | | | | |
| | **Exchange Ports** | | | | | | | | | | | | | | | |
| | **NOTE: Although the Port Rate includes all available features in GA, KY, LA & TN, the desired features will need to be ordered using retail USOCs** | | | | | | | | | | | | | | | |
| | **2-WIRE VOICE GRADE LINE PORT RATES (RES)** | | | | | | | | | | | | | | | |
| | Exchange Ports - 2-Wire Analog Line Port- Res. | | | UEPSR | UEPRL | 1.38 | 2.38 | 2.27 | 1.42 | 1.33 | | | | | | |
| | Exchange Ports - 2-Wire Analog Line Port with Caller ID - Res. | | | UEPSR | UEPRC | 1.38 | 2.38 | 2.27 | 1.42 | 1.33 | | | | | | |
| | Exchange Ports - 2-Wire Analog Line Port outgoing only - Res. | | | UEPSR | UEPRO | 1.38 | 2.38 | 2.27 | 1.42 | 1.33 | | | | | | |
| | Exchange Ports - 2-Wire VG unbundled AL extended local dialing parity Port with Caller ID - Res. | | | UEPSR | UEPAR | 1.38 | 2.38 | 2.27 | 1.42 | 1.33 | | | | | | |
| | Exchange Ports - 2-Wire VG unbundled res, low usage line port with Caller ID (LUM) | | | UEPSR | UEPAP | 1.38 | 2.38 | 2.27 | 1.42 | 1.33 | | | | | | |
| | Exchange Ports - 2-Wire VG Alabama Residence Dialing Plan without Caller Id | | | UEPSR | UEPWA | 1.38 | 2.38 | 2.27 | 1.42 | 1.33 | | | | | | |
| | 2-Wire voice unbundled Low Usage Line Port without Caller ID Capability | | | UEPSR | UEPRT | 1.38 | 2.38 | 2.27 | 1.42 | 1.33 | | | | | | |
| | Subsequent Activity | | | UEPSR | USASC | 0.00 | 0.00 | 0.00 | | | | | | | | |
| | **FEATURES** | | | | | | | | | | | | | | | |
| | All Available Vertical Features | | | UEPSR | UEPVF | 1.98 | 0.00 | 0.00 | | | | | | | | |
| | **2-WIRE VOICE GRADE LINE PORT RATES (BUS)** | | | | | | | | | | | | | | | |

| UNBUNDLED NETWORK ELEMENTS - Alabama | | | | | | | | | | | | | | Attachment: 2 | | Exhibit: A | |
|---|---|---|---|---|---|---|---|---|---|---|---|---|---|---|---|---|---|
| CATEGORY | RATE ELEMENTS | Interim | Zone | BCS | USOC | RATES ($) | | | | | Svc Order Submitted Elec per LSR | Svc Order Submitted Manually per LSR | Incremental Charge - Manual Svc Order vs. Electronic-1st | Incremental Charge - Manual Svc Order vs. Electronic-Add'l | Incremental Charge - Manual Svc Order vs. Electronic-Disc 1st | Incremental Charge - Manual Svc Order vs. Electronic-Disc Add'l |
| | | | | | | Rec | Nonrecurring | | Nonrecurring Disconnect | | OSS Rates ($) | | | | | |
| | | | | | | | First | Add'l | First | Add'l | SOMEC | SOMAN | SOMAN | SOMAN | SOMAN | SOMAN |
| | Exchange Ports - 2-Wire Analog Line Port without Caller ID - Bus | | | UEPSB | UEPBL | 1.38 | 2.38 | 2.27 | 1.42 | 1.33 | | | | | | |
| | Exchange Ports - 2-Wire VG unbundled Line Port with unbundled port with Caller+E484 ID - Bus. | | | UEPSB | UEPBC | 1.38 | 2.38 | 2.27 | 1.42 | 1.33 | | | | | | |
| | Exchange Ports - 2-Wire Analog Line Port outgoing only - Bus. | | | UEPSB | UEPBO | 1.38 | 2.38 | 2.27 | 1.42 | 1.33 | | | | | | |
| | Exchange Ports - 2-Wire VG unbundled AL extended local dialing parity Port with Caller ID - Bus. | | | UEPSB | UEPAW | 1.38 | 2.38 | 2.27 | 1.42 | 1.33 | | | | | | |
| | Exhange Ports - 2-Wire VG unbundled incoming only port with Caller ID - Bus | | | UEPSB | UEPB1 | 1.38 | 2.38 | 2.27 | 1.42 | 1.33 | | | | | | |
| | Exchange Ports - 2-Wire Voice Alabama Business Dialing Plan without Caller ID | | | UEPSB | UEPWB | 1.38 | 2.38 | 2.27 | 1.42 | 1.33 | | | | | | |
| | 2-Wire voice unbundled Incoming Only Port without Caller ID Capability | | | UEPSB | UEPBE | 1.38 | 2.38 | 2.27 | 1.42 | 1.33 | | | | | | |
| | Subsequent Activity | | | UEPSB | USASC | 0.00 | 0.00 | 0.00 | | | | | | | | |
| FEATURES | | | | | | | | | | | | | | | | |
| | All Available Vertical Features | | | UEPSB | UEPVF | 1.98 | 0.00 | 0.00 | | | | | | | | |
| EXCHANGE PORT RATES (DID & PBX) | | | | | | | | | | | | | | | | |
| | 2-Wire VG Unbundled 2-Way PBX Trunk - Res | | | UEPSE | UEPRD | 1.38 | 31.27 | 14.85 | 13.94 | 0.90 | | | | | | |
| | 2-Wire VG Line Side Unbundled 2-Way PBX Trunk - Bus | | | UEPSP | UEPPC | 1.38 | 31.27 | 14.85 | 13.94 | 0.90 | | | | | | |
| | 2-Wire VG Line Side Unbundled Outward PBX Trunk - Bus | | | UEPSP | UEPPO | 1.38 | 31.27 | 14.85 | 13.94 | 0.90 | | | | | | |
| | 2-Wire VG Line Side Unbundled Incoming PBX Trunk - Bus | | | UEPSP | UEPP1 | 1.38 | 31.27 | 14.85 | 13.94 | 0.90 | | | | | | |
| | 2-Wire Analog Long Distance Terminal PBX Trunk - Bus | | | UEPSP | UEPLD | 1.38 | 31.27 | 14.85 | 13.94 | 0.90 | | | | | | |
| | 2-Wire Voice Unbundled 2-Way PBX Alabama Calling Port | | | UEPSP | UEPA2 | 1.38 | 31.27 | 14.85 | 13.94 | 0.90 | | | | | | |
| | 2-Wire Voice Unbundled PBX LD Terminal Ports | | | UEPSP | UEPLD | 1.38 | 31.27 | 14.85 | 13.94 | 0.90 | | | | | | |
| | 2-Wire Vice Unbundled 2-Way PBX Usage Port | | | UEPSP | UEPXA | 1.38 | 31.27 | 14.85 | 13.94 | 0.90 | | | | | | |
| | 2-Wire Voice Unbundled PBX Toll Terminal Hotel Ports | | | UEPSP | UEPXB | 1.38 | 31.27 | 14.85 | 13.94 | 0.90 | | | | | | |
| | 2-Wire Voice Unbundled PBX LD DDD Terminals Port | | | UEPSP | UEPXC | 1.38 | 31.27 | 14.85 | 13.94 | 0.90 | | | | | | |
| | 2-Wire Voice Unbundled PBX LD Terminal Switchboard Port | | | UEPSP | UEPXD | 1.38 | 31.27 | 14.85 | 13.94 | 0.90 | | | | | | |
| | 2-Wire Voice Unbundled PBX LD Terminal Switchboard IDD Capable Port | | | UEPSP | UEPXE | 1.38 | 31.27 | 14.85 | 13.94 | 0.90 | | | | | | |
| | 2-Wire Voice Unbundled 2-Way PBX Hotel/Hospital Economy Administrative Calling Port | | | UEPSP | UEPXL | 1.38 | 31.27 | 14.85 | 13.94 | 0.90 | | | | | | |
| | 2-Wire Voice Unbundled 2-Way PBX Hotel/Hospital Economy Room Calling Port | | | UEPSP | UEPXM | 1.38 | 31.27 | 14.85 | 13.94 | 0.90 | | | | | | |
| | 2-Wire Voice Unbundled 1-Way Outgoing PBX Hotel/Hospital Discount Room Calling Port | | | UEPSP | UEPXO | 1.38 | 31.27 | 14.85 | 13.94 | 0.90 | | | | | | |
| | 2-Wire Voice Unbundled 1-Way Outgoing PBX Measured Port | | | UEPSP | UEPXS | 1.38 | 31.27 | 14.85 | 13.94 | 0.90 | | | | | | |
| | Subsequent Activity | | | UEPSP | USASC | 0.00 | 0.00 | 0.00 | | | | | | | | |
| FEATURES | | | | | | | | | | | | | | | | |
| | All Available Vertical Features | | | UEPSP UEPSE | UEPVF | 1.98 | 0.00 | 0.00 | | | | | | | | |
| EXCHANGE PORT RATES (COIN) | | | | | | | | | | | | | | | | |
| | Exchange Ports - Coin Port | | | | | 1.38 | 2.38 | 2.27 | 1.42 | 1.33 | | | | | | |
| NOTE: Transmission/usage charges associated with POTS circuit switched usage will also apply to circuit switched voice and/or circuit switched data transmission by B-Channels associated with 2-wire ISDN ports. | | | | | | | | | | | | | | | | |
| NOTE: Access to B Channel or D Channel Packet capabilities will be available only through BFR/New Business Request Process. Rates for the packet capabilities will be determined via the Bona Fide Request/New Business Request Process. | | | | | | | | | | | | | | | | |
| UNBUNDLED LOCAL EXCHANGE SWITCHING(PORTS) | | | | | | | | | | | | | | | | |
| EXCHANGE PORT RATES | | | | | | | | | | | | | | | | |
| The DS1 Port rates below for 4-Wire DDITS Trunk Port and 4-Wire ISDN Port in this rate exhibit apply to the embedded base in place as of 10/2/03 until 4/1/04. After 4/1/04 these rates shall revert to tariff rates or a separate agreement. | | | | | | | | | | | | | | | | |
| Requests for 4-Wire DDITS Trunk Ports with 4-Wire ISDN DS1 Ports after the effective date of this amendment shall be provided pursuant to a separate agreement or tariff at BellSouth's discretion. | | | | | | | | | | | | | | | | |
| | Exchange Ports - 2-Wire DID Port | | | UEPEX | UEPP2 | 8.05 | 119.31 | 18.74 | 59.90 | 3.76 | | | | | | |
| | Exchange Ports - DDITS Port - 4-Wire DS1 Port with DID capability (E:4/1/2004) | | | UEPDD | UEPDD | 60.09 | 202.02 | 95.69 | 72.59 | 2.46 | | | | | | |
| | Exchange Ports - 2-Wire ISDN Port (See Notes below.) | | | UEPTX, UEPSX | U1PMA | 9.79 | 72.77 | 52.99 | 47.79 | 10.74 | | | | | | |
| | All Features Offered | | | UEPTX, UEPSX | UEPVF | 1.98 | 0.00 | 0.00 | | | | | | | | |
| | Exchange Ports - 2-Wire ISDN Port -- Channel Profiles | | | UEPTX, UEPSX | U1UMA | 0.00 | 0.00 | 0.00 | | | | | | | | |
| NOTE: Transmission/usage charges associated with POTS circuit switched usage will also apply to circuit switched voice and/or circuit switched data transmission by B-Channels associated with 2-wire ISDN ports. | | | | | | | | | | | | | | | | |
| NOTE: Access to B Channel or D Channel Packet capabilities will be available only through BFR/New Business Request Process. Rates for the packet capabilities will be determined via the Bona Fide Request/New Business Request Process. | | | | | | | | | | | | | | | | |
| EXCHANGE PORT RATES (continued) | | | | | | | | | | | | | | | | |

| UNBUNDLED NETWORK ELEMENTS - Alabama | | | | | | | | | | | | | Attachment: 2 | | Exhibit: A | |
|---|---|---|---|---|---|---|---|---|---|---|---|---|---|---|---|---|
| CATEGORY | RATE ELEMENTS | Interim | Zone | BCS | USOC | RATES ($) | | | | | Svc Order Submitted Elec per LSR | Svc Order Submitted Manually per LSR | Incremental Charge - Manual Svc Order vs. Electronic-1st | Incremental Charge - Manual Svc Order vs. Electronic-Add'l | Incremental Charge - Manual Svc Order vs. Electronic-Disc 1st | Incremental Charge - Manual Svc Order vs. Electronic-Disc Add'l |
| | | | | | | Rec | Nonrecurring | | Nonrecurring Disconnect | | OSS Rates ($) | | | | | |
| | | | | | | | First | Add'l | First | Add'l | SOMEC | SOMAN | SOMAN | SOMAN | SOMAN | SOMAN |
| | Exchange Ports - 4-Wire ISDN DS1 Port with Detailed E911 Locator Capability (E:4/1/2004) | | | UEPEX | UEPEX | 84.32 | 203.81 | 101.56 | 79.18 | 20.06 | | | | | | |
| | Exchange Ports - 4-Wire ISDN DS1 Port (E:4/1/2004) | | | UEPDX | UEPDX | 84.32 | 203.81 | 101.56 | 79.18 | 20.06 | | | | | | |
| | Physical Collocation - DS1 Cross-Connects | | | UEPEX UEPDX | PE1P1 | 1.11 | 22.03 | 15.93 | 6.40 | 5.79 | | | | | | |
| | Virtual collocation - Special Access & UNE, cross-connect per DS1 | | | UEPEX UEPDX | CNC1X | 1.11 | 22.03 | 15.93 | 6.40 | 5.79 | | | | | | |
| **Detailed E911 with Locator Capability (required with UEPEX port)** | | | | | | | | | | | | | | | | |
| | Unbundled Exchange Ports, 4-Wire ISDN DS1 Port - E911 Locator Capability - Initial Profile Establishment per CLEC per State | | | UEPEX | UEP1A | 0.00 | 1,804.00 | | 156.08 | | | | | | | |
| | Unbundled Exchange Ports, 4-Wire ISDN DS1 Port - E911 Locator Capability - Subsequent Profile Changes, Additions, Deletions | | | UEPEX | UEP1B | 0.00 | 175.14 | | | | | | | | | |
| **New or Additional PRI Telephone Numbers** | | | | | | | | | | | | | | | | |
| | Unbundled Exchange Ports, 4-Wire ISDN DS1 Port - E911 Locator Capability 2-way Telephone Numbers, per number in E911 profile [New or Additional] | | | UEPEX | UEP1C | 0.0697 | 0.49 | | | | | | | | | |
| | Unbundled Exchange Ports, 4-Wire ISDN DS1 Port - E911 Locator Capability - Outdial Telephone Numbers, per number in E911 profile [New or Additional] | | | UEPEX | UEP1D | 0.0697 | 11.51 | | | | | | | | | |
| | Unbundled Exchange Ports, 4-Wire ISDN DS1 Port - Inward Telephone Numbers - Inward Data Only Option [New or Additional] | | | UEPDX | UEP1E | 0.00 | 0.049 | | | | | | | | | |
| | Exchange Ports - 4-Wire ISDN DS1 Port - Subsequent [New] Inward Tel Numbers [Customer Testing Purposes] | | | UEPEX | PR7ZT | 0.00 | 23.02 | | | | | | | | | |
| **LOCAL NUMBER PORTABILITY** | | | | | | | | | | | | | | | | |
| | Local Number Portability (1 per port) | | | UEPEX UEPDX | LNPCN | 1.75 | | | | | | | | | | |
| **INTERFACE (Provsioning Only)** | | | | | | | | | | | | | | | | |
| | Voice/Data | | | UEPEX | PR71V | 0.00 | 0.00 | 0.00 | | | | | | | | |
| | Digital Data | | | UEPEX | PR71D | 0.00 | 0.00 | 0.00 | | | | | | | | |
| | Inward Data | | | UEPDX | PR71E | 0.00 | 0.00 | 0.00 | | | | | | | | |
| **New or Additional Channel** | | | | | | | | | | | | | | | | |
| | New or Additional - Voice/Data "B" Channel | | | UEPEX | PR7BV | 0.00 | 14.53 | | | | | | | | | |
| | New or Additional - Digital Data "B" Channel | | | UEPEX | PR7BF | 0.00 | 14.53 | | | | | | | | | |
| | New or Additional Inward Data "B" Channel | | | UEPDX | PR7BD | 0.00 | 14.53 | | | | | | | | | |
| | New or Additional Useage Sensitive Voice Data "B" Channel | | | UEPEX | PR7BS | 0.00 | 14.53 | | | | | | | | | |
| | New or Additional Useage Sensitive Digital Data "B" Channel | | | UEPEX | PR7BU | 0.00 | 14.53 | | | | | | | | | |
| | New or Additional PRI "D" Channel | | | UEPEX | PR7EX | 0.00 | 14.53 | | | | | | | | | |
| **CALL TYPES** | | | | | | | | | | | | | | | | |
| | Inward | | | UEPEX UEPDX | PR7C1 | 0.00 | 0.00 | 0.00 | | | | | | | | |
| | Outward | | | UEPEX | PR7CO | 0.00 | 0.00 | 0.00 | | | | | | | | |
| | Two-way | | | UEPEX | PR7CC | 0.00 | 0.00 | 0.00 | | | | | | | | |
| **UNBUNDLED PORT with REMOTE CALL FORWARDING CAPABILITY** | | | | | | | | | | | | | | | | |
| **UNBUNDLED REMOTE CALL FORWARDING SERVICE - RESIDENCE** | | | | | | | | | | | | | | | | |
| | Unbundled Remote Call Forwarding Service, Area Calling, Res | | | UEPVR | UERAC | 1.38 | 2.38 | 2.27 | 1.42 | 1.33 | | | | | | |
| | Unbundled Remote Call Forwarding Service, Local Calling - Res | | | UEPVR | UERLC | 1.38 | 2.38 | 2.27 | 1.42 | 1.33 | | | | | | |
| | Unbundled Remote Call Forwarding Service, InterLATA - Res | | | UEPVR | UERTE | 1.38 | 2.38 | 2.27 | 1.42 | 1.33 | | | | | | |
| | Unbundled Remote Call Forwarding Service, IntraLATA - Res | | | UEPVR | UERTR | 1.38 | 2.38 | 2.27 | 1.42 | 1.33 | | | | | | |
| **Non-Recurring** | | | | | | | | | | | | | | | | |
| | Unbundled Remote Call Forwarding Service - Conversion - Switch-as-is | | | UEPVR | USAC2 | | 0.10 | 0.10 | | | | | | | | |
| | Unbundled Remote Call Forwarding Service - Conversion with allowed change (PIC and LPIC) | | | UEPVR | USACC | | 0.10 | 0.10 | | | | | | | | |
| **UNBUNDLED REMOTE CALL FORWARDING - Bus** | | | | | | | | | | | | | | | | |
| | Unbundled Remote Call Forwarding Service, Area Calling - Bus | | | UEPVB | UERAC | 1.38 | 2.38 | 2.27 | 1.42 | 1.33 | | | | | | |
| | Unbundled Remote Call Forwarding Service, Local Calling - Bus | | | UEPVB | UERLC | 1.38 | 2.38 | 2.27 | 1.42 | 1.33 | | | | | | |

| UNBUNDLED NETWORK ELEMENTS - Alabama | | | | | | | | | | | | | | Attachment: 2 | | Exhibit: A | |
|---|---|---|---|---|---|---|---|---|---|---|---|---|---|---|---|---|---|
| CATEGORY | RATE ELEMENTS | Interim | Zone | BCS | USOC | RATES ($) | | | | | Svc Order Submitted Elec per LSR | Svc Order Submitted Manually per LSR | Incremental Charge - Manual Svc Order vs. Electronic-1st | Incremental Charge - Manual Svc Order vs. Electronic-Add'l | Incremental Charge - Manual Svc Order vs. Electronic-Disc 1st | Incremental Charge - Manual Svc Order vs. Electronic-Disc Add'l |
| | | | | | | Rec | Nonrecurring | | Nonrecurring Disconnect | | OSS Rates ($) | | | | | |
| | | | | | | | First | Add'l | First | Add'l | SOMEC | SOMAN | SOMAN | SOMAN | SOMAN | SOMAN |
| | Unbundled Remote Call Forwarding Service, InterLATA - Bus | | | UEPVB | UERTE | 1.38 | 2.38 | 2.27 | 1.42 | 1.33 | | | | | | |
| | Unbundled Remote Call Forwarding Service, IntraLATA - Bus | | | UEPVB | UERTR | 1.38 | 2.38 | 2.27 | 1.42 | 1.33 | | | | | | |
| | Unbundled Remote Call Forwarding Service Expanded and Exception Local Calling | | | UEPVB | UERVJ | 1.38 | 2.38 | 2.27 | 1.42 | 1.33 | | | | | | |
| Non-Recurring | | | | | | | | | | | | | | | | |
| | Unbundled Remote Call Forwarding Service - Conversion - Switch-as-is | | | UEPVB | USAC2 | | 0.10 | 0.10 | | | | | | | | |
| | Unbundled Remote Call Forwarding Service - Conversion with allowed change (PIC and LPIC) | | | UEPVB | USACC | | 0.10 | 0.10 | | | | | | | | |
| UNBUNDLED LOCAL SWITCHING, PORT USAGE | | | | | | | | | | | | | | | | |
| End Office Switching (Port Usage) | | | | | | | | | | | | | | | | |
| | End Office Switching Function, Per MOU | | | | | 0.0007025 | | | | | | | | | | |
| | End Office Trunk Port - Shared, Per MOU | | | | | 0.0001638 | | | | | | | | | | |
| Tandem Switching (Port Usage) (Local or Access Tandem) | | | | | | | | | | | | | | | | |
| | Tandem Switching Function Per MOU | | | | | 0.000095 | | | | | | | | | | |
| | Tandem Trunk Port - Shared, Per MOU | | | | | 0.0002015 | | | | | | | | | | |
| | Tandem Switching Function Per MOU (Melded) | | | | | 0.000040993 | | | | | | | | | | |
| | Tandem Trunk Port - Shared, Per MOU (Melded) | | | | | 0.000086947 | | | | | | | | | | |
| | Melded Factor: 43.15% of the Tandem Rate | | | | | | | | | | | | | | | |
| Common Transport | | | | | | | | | | | | | | | | |
| | Common Transport - Per Mile, Per MOU | | | | | 0.0000023 | | | | | | | | | | |
| | Common Transport - Facilities Termination Per MOU | | | | | 0.0003224 | | | | | | | | | | |
| UNBUNDLED PORT/LOOP COMBINATIONS - COST BASED RATES | | | | | | | | | | | | | | | | |
| Cost Based Rates are applied where BellSouth is required by FCC and/or State Commission rule to provide Unbundled Local Switching or Switch Ports. | | | | | | | | | | | | | | | | |
| Features shall apply to the Unbundled Port/Loop Combination - Cost Based Rate section in the same manner as they are applied to the Stand-Alone Unbundled Port section of this Rate Exhibit. | | | | | | | | | | | | | | | | |
| End Office and Tandem Switching Usage and Common Transport Usage rates in the Port section of this rate exhibit shall apply to all combinations of loop/port network elements except for UNE Coin Port/Loop Combinations. | | | | | | | | | | | | | | | | |
| The first and additional Port nonrecurring charges apply to Not Currently Combined Combos. For Currently Combined Combos the nonrecurring charges shall be those identified in the Nonrecurring - Currently Combined sections. | | | | | | | | | | | | | | | | |
| 2-WIRE VOICE GRADE LOOP WITH 2-WIRE LINE PORT (RES) | | | | | | | | | | | | | | | | |
| UNE Port/Loop Combination Rates | | | | | | | | | | | | | | | | |
| | 2-Wire VG Loop/Port Combo - Zone 1 | | 1 | | | 12.70 | | | | | | | | | | |
| | 2-Wire VG Loop/Port Combo - Zone 2 | | 2 | | | 21.19 | | | | | | | | | | |
| | 2-Wire VG Loop/Port Combo - Zone 3 | | 3 | | | 34.80 | | | | | | | | | | |
| UNE Loop Rates | | | | | | | | | | | | | | | | |
| | 2-Wire Voice Grade Loop (SL1) - Zone 1 | | 1 | UEPRX | UEPLX | 11.55 | | | | | | | | | | |
| | 2-Wire Voice Grade Loop (SL1) - Zone 2 | | 2 | UEPRX | UEPLX | 20.04 | | | | | | | | | | |
| | 2-Wire Voice Grade Loop (SL1) - Zone 3 | | 3 | UEPRX | UEPLX | 33.65 | | | | | | | | | | |
| 2-Wire Voice Grade Line Port Rates (Res) | | | | | | | | | | | | | | | | |
| | 2-Wire voice unbundled port - residence | | | UEPRX | UEPRL | 1.15 | 40.19 | 19.83 | 24.91 | 6.63 | | | | | | |
| | 2-Wire voice unbundled port with Caller ID - res | | | UEPRX | UEPRC | 1.15 | 40.19 | 19.83 | 24.91 | 6.63 | | | | | | |
| | 2-Wire voice unbundled port outgoing only - res | | | UEPRX | UEPRO | 1.15 | 40.19 | 19.83 | 24.91 | 6.63 | | | | | | |
| | 2-Wire voice Grade unbundled Alabama extended local dialing parity port with Caller ID - res | | | UEPRX | UEPAR | 1.15 | 40.19 | 19.83 | 24.91 | 6.63 | | | | | | |
| | 2-Wire voice unbundles res, low usage line port with Caller ID (LUM) | | | UEPRX | UEPAP | 1.15 | 40.19 | 19.83 | 24.91 | 6.63 | | | | | | |
| | 2-Wire Voice Unbundled Alabama Residence Dialing Plan without Caller ID | | | UEPRX | UEPWA | 1.15 | 40.19 | 19.83 | 24.91 | 6.63 | | | | | | |
| | 2-Wire voice unbundled Low Usage Line Port without Caller ID Capability | | | UEPRX | UEPRT | 1.15 | 40.19 | 19.83 | 24.91 | 6.63 | | | | | | |
| FEATURES | | | | | | | | | | | | | | | | |
| | All Features Offered | | | UEPRX | UEPVF | 1.98 | 0.00 | 0.00 | | | | | | | | |
| LOCAL NUMBER PORTABILITY | | | | | | | | | | | | | | | | |
| | Local Number Portability (1 per port) | | | UEPRX | LNPCX | 0.35 | | | | | | | | | | |
| NONRECURRING CHARGES (NRCs) - CURRENTLY COMBINED | | | | | | | | | | | | | | | | |
| | 2-Wire Voice Grade Loop / Line Port Combination - Conversion - Switch-as-is | | | UEPRX | USAC2 | | 0.10 | 0.10 | | | | | | | | |
| | 2-Wire Voice Grade Loop / Line Port Combination - Conversion - Switch with change | | | UEPRX | USACC | | 0.10 | 0.10 | | | | | | | | |
| ADDITIONAL NRCs | | | | | | | | | | | | | | | | |

## UNBUNDLED NETWORK ELEMENTS - Alabama

| CATEGORY | RATE ELEMENTS | Interim | Zone | BCS | USOC | RATES ($) | | | | | Svc Order Submitted Elec per LSR | Svc Order Submitted Manually per LSR | Attachment: 2 Incremental Charge - Manual Svc Order vs. Electronic- 1st | Attachment: 2 Incremental Charge - Manual Svc Order vs. Electronic- Add'l | Exhibit: A Incremental Charge - Manual Svc Order vs. Electronic- Disc 1st | Exhibit: A Incremental Charge - Manual Svc Order vs. Electronic- Disc Add'l |
|---|---|---|---|---|---|---|---|---|---|---|---|---|---|---|---|---|
| | | | | | | Rec | Nonrecurring | | Nonrecurring Disconnect | | OSS Rates ($) | | | | | |
| | | | | | | | First | Add'l | First | Add'l | SOMEC | SOMAN | SOMAN | SOMAN | SOMAN | SOMAN |
| | 2-Wire Voice Grade Loop/Line Port Combination - Subsequent Activity | | | UEPRX | USAS2 | 0.00 | 0.00 | 0.00 | | | | | | | | |
| | Unbundled Miscellaneous Rate Element, Tag Loop at End User Premise | | | UEPRX | URETL | | 8.33 | 0.83 | | | | | | | | |
| | **OFF/ON PREMISES EXTENSION CHANNELS** | | | | | | | | | | | | | | | |
| | 2 Wire Analog Voice Grade Extension Loop – Non-Design | | 1 | UEPRX | UEAEN | 12.58 | 37.81 | 17.56 | 23.49 | 5.30 | | | | | | |
| | 2 Wire Analog Voice Grade Extension Loop – Non-Design | | 2 | UEPRX | UEAEN | 21.05 | 37.81 | 17.56 | 23.49 | 5.30 | | | | | | |
| | 2 Wire Analog Voice Grade Extension Loop – Non-Design | | 3 | UEPRX | UEAEN | 34.34 | 37.81 | 17.56 | 23.49 | 5.30 | | | | | | |
| | 2 Wire Analog Voice Grade Extension Loop – Design | | 1 | UEPRX | UEAED | 14.38 | 88.00 | 55.00 | 47.24 | 7.44 | | | | | | |
| | 2 Wire Analog Voice Grade Extension Loop – Design | | 2 | UEPRX | UEAED | 22.85 | 88.00 | 55.00 | 47.24 | 7.44 | | | | | | |
| | 2 Wire Analog Voice Grade Extension Loop – Design | | 3 | UEPRX | UEAED | 36.14 | 88.00 | 55.00 | 47.24 | 7.44 | | | | | | |
| | **INTEROFFICE TRANSPORT** | | | | | | | | | | | | | | | |
| | Interoffice Transport - Dedicated - 2 Wire Voice Grade - Facility Termination | | | UEPRX | U1TV2 | 21.13 | 40.54 | 27.41 | 16.74 | 6.90 | | | | | | |
| | Interoffice Transport - Dedicated - 2 Wire Voice Grade - Per Mile or Fraction Mile | | | UEPRX | U1TVM | 0.008838 | 0.00 | 0.00 | | | | | | | | |
| | **2-WIRE VOICE GRADE LOOP WITH 2-WIRE LINE PORT (BUS)** | | | | | | | | | | | | | | | |
| | **UNE Port/Loop Combination Rates** | | | | | | | | | | | | | | | |
| | 2-Wire VG Loop/Port Combo - Zone 1 | | 1 | | | 12.70 | | | | | | | | | | |
| | 2-Wire VG Loop/Port Combo - Zone 2 | | 2 | | | 21.19 | | | | | | | | | | |
| | 2-Wire VG Loop/Port Combo - Zone 3 | | 3 | | | 34.80 | | | | | | | | | | |
| | **UNE Loop Rates** | | | | | | | | | | | | | | | |
| | 2-Wire Voice Grade Loop (SL1) - Zone 1 | | 1 | UEPBX | UEPLX | 11.55 | | | | | | | | | | |
| | 2-Wire Voice Grade Loop (SL1) - Zone 2 | | 2 | UEPBX | UEPLX | 20.04 | | | | | | | | | | |
| | 2-Wire Voice Grade Loop (SL1) - Zone 3 | | 3 | UEPBX | UEPLX | 33.65 | | | | | | | | | | |
| | **2-Wire Voice Grade Line Port (Bus)** | | | | | | | | | | | | | | | |
| | 2-Wire voice unbundled port without Caller ID - bus | | | UEPBX | UEPBL | 1.15 | 40.19 | 19.83 | 24.91 | 6.63 | | | | | | |
| | 2-Wire voice unbundled port with Caller + E484 ID - bus | | | UEPBX | UEPBC | 1.15 | 40.19 | 19.83 | 24.91 | 6.63 | | | | | | |
| | 2-Wire voice unbundled port outgoing only - bus | | | UEPBX | UEPBO | 1.15 | 40.19 | 19.83 | 24.91 | 6.63 | | | | | | |
| | 2-Wire voice Grade unbundled Alabama extended local dialing parity port with Caller ID - bus | | | UEPBX | UEPAW | 1.15 | 40.19 | 19.83 | 24.91 | 6.63 | | | | | | |
| | 2-Wire voice unbundled incoming only port with Caller ID - Bus | | | UEPBX | UEPB1 | 1.15 | 40.19 | 19.83 | 24.91 | 6.63 | | | | | | |
| | 2-Wire Voice Unbundled Alabama Business Dialing Plan without Caller ID | | | UEPBX | UEPWB | 1.15 | 40.19 | 19.83 | 24.91 | 6.63 | | | | | | |
| | 2-Wire voice unbundled Incoming Only Port without Caller ID Capability | | | UEPBX | UEPBE | 1.15 | 40.19 | 19.83 | 24.91 | 6.63 | | | | | | |
| | **LOCAL NUMBER PORTABILITY** | | | | | | | | | | | | | | | |
| | Local Number Portability (1 per port) | | | UEPBX | LNPCX | 0.35 | | | | | | | | | | |
| | **FEATURES** | | | | | | | | | | | | | | | |
| | All Features Offered | | | UEPBX | UEPVF | 1.98 | 0.00 | 0.00 | | | | | | | | |
| | **NONRECURRING CHARGES (NRCs) - CURRENTLY COMBINED** | | | | | | | | | | | | | | | |
| | 2-Wire Voice Grade Loop / Line Port Combination - Conversion - Switch-as-is | | | UEPBX | USAC2 | | 0.10 | 0.10 | | | | | | | | |
| | 2-Wire Voice Grade Loop / Line Port Combination - Conversion - Switch with change | | | UEPBX | USACC | | 0.10 | 0.10 | | | | | | | | |
| | **ADDITIONAL NRCs** | | | | | | | | | | | | | | | |
| | 2-Wire Voice Grade Loop/Line Port Combination - Subsequent Activity | | | UEPBX | USAS2 | | 0.00 | 0.00 | | | | | | | | |
| | Unbundled Miscellaneous Rate Element, Tag Loop at End User Premise | | | UEPBX | URETL | | 8.33 | 0.83 | | | | | | | | |
| | **OFF/ON PREMISES EXTENSION CHANNELS** | | | | | | | | | | | | | | | |
| | 2 Wire Analog Voice Grade Extension Loop – Non-Design | | 1 | UEPBX | UEAEN | 12.58 | 37.81 | 17.56 | 23.49 | 5.30 | | | | | | |
| | 2 Wire Analog Voice Grade Extension Loop – Non-Design | | 2 | UEPBX | UEAEN | 21.05 | 37.81 | 17.56 | 23.49 | 5.30 | | | | | | |
| | 2 Wire Analog Voice Grade Extension Loop – Non-Design | | 3 | UEPBX | UEAEN | 34.34 | 37.81 | 17.56 | 23.49 | 5.30 | | | | | | |
| | 2 Wire Analog Voice Grade Extension Loop – Design | | 1 | UEPBX | UEAED | 14.38 | 88.00 | 55.00 | 47.24 | 7.44 | | | | | | |
| | 2 Wire Analog Voice Grade Extension Loop – Design | | 2 | UEPBX | UEAED | 22.85 | 88.00 | 55.00 | 47.24 | 7.44 | | | | | | |
| | 2 Wire Analog Voice Grade Extension Loop – Design | | 3 | UEPBX | UEAED | 36.14 | 88.00 | 55.00 | 47.24 | 7.44 | | | | | | |
| | **INTEROFFICE TRANSPORT** | | | | | | | | | | | | | | | |

## UNBUNDLED NETWORK ELEMENTS - Alabama

| CATEGORY | RATE ELEMENTS | Interim | Zone | BCS | USOC | RATES ($) | | | | | Svc Order Submitted Elec per LSR | Svc Order Submitted Manually per LSR | Attachment: 2 | | Exhibit: A | |
|---|---|---|---|---|---|---|---|---|---|---|---|---|---|---|---|---|
| | | | | | | | | | | | | | Incremental Charge - Manual Svc Order vs. Electronic-1st | Incremental Charge - Manual Svc Order vs. Electronic-Add'l | Incremental Charge - Manual Svc Order vs. Electronic-Disc 1st | Incremental Charge - Manual Svc Order vs. Electronic-Disc Add'l |
| | | | | | | Rec | Nonrecurring | | Nonrecurring Disconnect | | OSS Rates ($) | | | | | |
| | | | | | | | First | Add'l | First | Add'l | SOMEC | SOMAN | SOMAN | SOMAN | SOMAN | SOMAN |
| | Interoffice Transport - Dedicated - 2 Wire Voice Grade - Facility Termination | | | UEPBX | U1TV2 | 21.13 | 40.54 | 27.41 | 16.74 | 6.90 | | | | | | |
| | Interoffice Transport - Dedicated - 2 Wire Voice Grade - Per Mile or Fraction Mile | | | UEPBX | U1TVM | 0.008838 | 0.00 | 0.00 | | | | | | | | |
| **2-WIRE VOICE GRADE LOOP WITH 2-WIRE LINE PORT (RES - PBX)** | | | | | | | | | | | | | | | | |
| **UNE Port/Loop Combination Rates** | | | | | | | | | | | | | | | | |
| | 2-Wire VG Loop/Port Combo - Zone 1 | | 1 | | | 12.70 | | | | | | | | | | |
| | 2-Wire VG Loop/Port Combo - Zone 2 | | 2 | | | 21.19 | | | | | | | | | | |
| | 2-Wire VG Loop/Port Combo - Zone 3 | | 3 | | | 34.80 | | | | | | | | | | |
| **UNE Loop Rates** | | | | | | | | | | | | | | | | |
| | 2-Wire Voice Grade Loop (SL 1) - Zone 1 | | 1 | UEPRG | UEPLX | 11.55 | | | | | | | | | | |
| | 2-Wire Voice Grade Loop (SL 1) - Zone 2 | | 2 | UEPRG | UEPLX | 20.04 | | | | | | | | | | |
| | 2-Wire Voice Grade Loop (SL 1) - Zone 3 | | 3 | UEPRG | UEPLX | 33.65 | | | | | | | | | | |
| **2-Wire Voice Grade Line Port Rates (RES - PBX)** | | | | | | | | | | | | | | | | |
| | 2-Wire VG Unbundled Combination 2-Way PBX Trunk Port - Res | | | UEPRG | UEPRD | 1.15 | 69.08 | 32.41 | 37.43 | 6.20 | | | | | | |
| **LOCAL NUMBER PORTABILITY** | | | | | | | | | | | | | | | | |
| | Local Number Portability (1 per port) | | | UEPRG | LNPCP | 3.15 | 0.00 | 0.00 | | | | | | | | |
| **FEATURES** | | | | | | | | | | | | | | | | |
| | All Features Offered | | | UEPRG | UEPVF | 1.98 | 0.00 | 0.00 | | | | | | | | |
| **NONRECURRING CHARGES (NRCs) - CURRENTLY COMBINED** | | | | | | | | | | | | | | | | |
| | 2-Wire Voice Grade Loop/ Line Port Combination (PBX) - Conversion - Switch-As-Is | | | UEPRG | USAC2 | | 7.91 | 1.90 | | | | | | | | |
| | 2-Wire Voice Grade Loop/ Line Port Combination (PBX) - Conversion - Switch with Change | | | UEPRG | USACC | | 7.81 | 1.90 | | | | | | | | |
| **ADDITIONAL NRCs** | | | | | | | | | | | | | | | | |
| | 2-Wire Voice Grade Loop/ Line Port Combination (PBX) - Subsequent Activity | | | UEPRG | USAS2 | 0.00 | 0.00 | 0.00 | | | | | | | | |
| | PBX Subsequent Activity - Change/Rearrange Multiline Hunt Group | | | | | | 7.32 | 7.32 | | | | | | | | |
| | Unbundled Miscellaneous Rate Element, Tag Loop at End User Premise | | | UEPRG | URETL | | 8.33 | 0.83 | | | | | | | | |
| **OFF/ON PREMISES EXTENSION CHANNELS** | | | | | | | | | | | | | | | | |
| | Local Channel Voice grade, per termination | | 1 | UEPRG | P2JHX | 14.38 | 88.00 | 55.00 | 47.24 | 7.44 | | | | | | |
| | Local Channel Voice grade, per termination | | 2 | UEPRG | P2JHX | 22.85 | 88.00 | 55.00 | 47.24 | 7.44 | | | | | | |
| | Local Channel Voice grade, per termination | | 3 | UEPRG | P2JHX | 36.14 | 88.00 | 55.00 | 47.24 | 7.44 | | | | | | |
| | Non-Wire Direct Serve Channel Voice Grade | | 1 | UEPRG | SDD2X | 22.41 | 131.60 | 61.92 | 90.50 | 13.40 | | | | | | |
| | Non-Wire Direct Serve Channel Voice Grade | | 2 | UEPRG | SDD2X | 23.88 | 131.60 | 61.92 | 90.50 | 13.40 | | | | | | |
| | Non-Wire Direct Serve Channel Voice Grade | | 3 | UEPRG | SDD2X | 33.72 | 131.60 | 61.92 | 90.50 | 13.40 | | | | | | |
| **INTEROFFICE TRANSPORT** | | | | | | | | | | | | | | | | |
| | Interoffice Transport - Dedicated - 2 Wire Voice Grade - Facility Termination | | | UEPRG | U1TV2 | 21.13 | 40.54 | 27.41 | 16.74 | 6.90 | | | | | | |
| | Interoffice Transport - Dedicated - 2 Wire Voice Grade - Per Mile or Fraction Mile | | | UEPRG | U1TVM | 0.008838 | 0.00 | 0.00 | | | | | | | | |
| **2-WIRE VOICE GRADE LOOP WITH 2-WIRE LINE PORT (BUS - PBX)** | | | | | | | | | | | | | | | | |
| **UNE Port/Loop Combination Rates** | | | | | | | | | | | | | | | | |
| | 2-Wire VG Loop/Port Combo - Zone 1 | | 1 | | | 12.70 | | | | | | | | | | |
| | 2-Wire VG Loop/Port Combo - Zone 2 | | 2 | | | 21.19 | | | | | | | | | | |
| | 2-Wire VG Loop/Port Combo - Zone 3 | | 3 | | | 34.80 | | | | | | | | | | |
| **UNE Loop Rates** | | | | | | | | | | | | | | | | |
| | 2-Wire Voice Grade Loop (SL 1) - Zone 1 | | 1 | UEPPX | UEPLX | 11.55 | | | | | | | | | | |
| | 2-Wire Voice Grade Loop (SL 1) - Zone 2 | | 2 | UEPPX | UEPLX | 20.04 | | | | | | | | | | |
| | 2-Wire Voice Grade Loop (SL 1) - Zone 3 | | 3 | UEPPX | UEPLX | 33.65 | | | | | | | | | | |
| **2-Wire Voice Grade Line Port Rates (BUS - PBX)** | | | | | | | | | | | | | | | | |
| | Line Side Unbundled Combination 2-Way PBX Trunk Port - Bus | | | UEPPX | UEPPC | 1.15 | 69.08 | 32.41 | 37.43 | 6.20 | | | | | | |
| | Line Side Unbundled Outward PBX Trunk Port - Bus | | | UEPPX | UEPPO | 1.15 | 69.08 | 32.41 | 37.43 | 6.20 | | | | | | |
| | Line Side Unbundled Incoming PBX Trunk Port - Bus | | | UEPPX | UEPP1 | 1.15 | 69.08 | 32.41 | 37.43 | 6.20 | | | | | | |

## UNBUNDLED NETWORK ELEMENTS - Alabama

| CATEGORY | RATE ELEMENTS | Interim | Zone | BCS | USOC | RATES ($) | | | | | Svc Order Submitted Elec per LSR | Svc Order Submitted Manually per LSR | Attachment: 2 Incremental Charge - Manual Svc Order vs. Electronic-1st | Attachment: 2 Incremental Charge - Manual Svc Order vs. Electronic-Add'l | Exhibit: A Incremental Charge - Manual Svc Order vs. Electronic-Disc 1st | Exhibit: A Incremental Charge - Manual Svc Order vs. Electronic-Disc Add'l |
|---|---|---|---|---|---|---|---|---|---|---|---|---|---|---|---|---|
| | | | | | | Rec | Nonrecurring | | Nonrecurring Disconnect | | OSS Rates ($) | | | | | |
| | | | | | | | First | Add'l | First | Add'l | SOMEC | SOMAN | SOMAN | SOMAN | SOMAN | SOMAN |
| | 2-Wire Voice Unbundled 2-Way Combination PBX Alabama Calling Port | | | UEPPX | UEPA2 | 1.15 | 69.08 | 32.41 | 37.43 | 6.20 | | | | | | |
| | 2-Wire Voice Unbundled PBX LD Terminal Ports | | | UEPPX | UEPLD | 1.15 | 69.08 | 32.41 | 37.43 | 6.20 | | | | | | |
| | 2-Wire Voice Unbundled 2-Way Combination PBX Usage Port | | | UEPPX | UEPXA | 1.15 | 69.08 | 32.41 | 37.43 | 6.20 | | | | | | |
| | 2-Wire Voice Unbundled PBX Toll Terminal Hotel Ports | | | UEPPX | UEPXB | 1.15 | 69.08 | 32.41 | 37.43 | 6.20 | | | | | | |
| | 2-Wire Voice Unbundled PBX LD DDD Terminals Port | | | UEPPX | UEPXC | 1.15 | 69.08 | 32.41 | 37.43 | 6.20 | | | | | | |
| | 2-Wire Voice Unbundled PBX LD Terminal Switchboard Port | | | UEPPX | UEPXD | 1.15 | 69.08 | 32.41 | 37.43 | 6.20 | | | | | | |
| | 2-Wire Voice Unbundled PBX LD Terminal Switchboard IDD Capable Port | | | UEPPX | UEPXE | 1.15 | 69.08 | 32.41 | 37.43 | 6.20 | | | | | | |
| | 2-Wire Voice Unbundled 2-Way PBX Hotel/Hospital Economy Administrative Calling Port | | | UEPPX | UEPXL | 1.15 | 69.08 | 32.41 | 37.43 | 6.20 | | | | | | |
| | 2-Wire Voice Unbundled 2-Way PBX Hotel/Hospital Economy Room Calling Port | | | UEPPX | UEPXM | 1.15 | 69.08 | 32.41 | 37.43 | 6.20 | | | | | | |
| | 2-Wire Voice Unbundled 1-Way Outgoing PBX Hotel/Hospital Discount Room Calling Port | | | UEPPX | UEPXO | 1.15 | 69.08 | 32.41 | 37.43 | 6.20 | | | | | | |
| | 2-Wire Voice Unbundled 1-Way Outgoing PBX Measured Port | | | UEPPX | UEPXS | 1.15 | 69.08 | 32.41 | 37.43 | 6.20 | | | | | | |
| **LOCAL NUMBER PORTABILITY** | | | | | | | | | | | | | | | | |
| | Local Number Portability (1 per port) | | | UEPPX | LNPCP | 3.15 | 0.00 | 0.00 | | | | | | | | |
| **FEATURES** | | | | | | | | | | | | | | | | |
| | All Features Offered | | | UEPPX | UEPVF | 1.98 | 0.00 | 0.00 | | | | | | | | |
| **NONRECURRING CHARGES (NRCs) - CURRENTLY COMBINED** | | | | | | | | | | | | | | | | |
| | 2-Wire Voice Grade Loop/ Line Port Combination (PBX) - Conversion - Switch-As-Is | | | UEPPX | USAC2 | | 7.91 | 1.90 | | | | | | | | |
| | 2-Wire Voice Grade Loop/ Line Port Combination (PBX) - Conversion - Switch with Change | | | UEPPX | USACC | | 7.91 | 1.90 | | | | | | | | |
| **ADDITIONAL NRCs** | | | | | | | | | | | | | | | | |
| | 2-Wire Voice Grade Loop/ Line Port Combination (PBX) - Subsequent Activity | | | UEPPX | USAS2 | 0.00 | 0.00 | 0.00 | | | | | | | | |
| | PBX Subsequent Activity - Change/Rearrange Multiline Hunt Group | | | | | | 7.32 | 7.32 | | | | | | | | |
| | Unbundled Miscellaneous Rate Element, Tag Loop at End User Premise | | | UEPPX | URETL | | 8.33 | 0.83 | | | | | | | | |
| **OFF/ON PREMISES EXTENSION CHANNELS** | | | | | | | | | | | | | | | | |
| | Local Channel Voice grade, per termination | | 1 | UEPPX | P2JHX | 14.38 | 88.00 | 55.00 | 47.24 | 7.44 | | | | | | |
| | Local Channel Voice grade, per termination | | 2 | UEPPX | P2JHX | 22.85 | 88.00 | 55.00 | 47.24 | 7.44 | | | | | | |
| | Local Channel Voice grade, per termination | | 3 | UEPPX | P2JHX | 36.14 | 88.00 | 55.00 | 47.24 | 7.44 | | | | | | |
| | Non-Wire Direct Serve Channel Voice Grade | | 1 | UEPPX | SDD2X | 22.41 | 131.60 | 61.92 | 90.50 | 13.40 | | | | | | |
| | Non-Wire Direct Serve Channel Voice Grade | | 2 | UEPPX | SDD2X | 23.88 | 131.60 | 61.92 | 90.50 | 13.40 | | | | | | |
| | Non-Wire Direct Serve Channel Voice Grade | | 3 | UEPPX | SDD2X | 33.72 | 131.60 | 61.92 | 90.50 | 13.40 | | | | | | |
| **INTEROFFICE TRANSPORT** | | | | | | | | | | | | | | | | |
| | Interoffice Transport - Dedicated - 2 Wire Voice Grade - Facility Termination | | | UEPPX | U1TV2 | 21.13 | 40.54 | 27.41 | 16.74 | 6.90 | | | | | | |
| | Interoffice Transport - Dedicated - 2 Wire Voice Grade - Per Mile or Fraction Mile | | | UEPPX | U1TVM | 0.008838 | 0.00 | 0.00 | | | | | | | | |
| **2-WIRE VOICE GRADE LOOP WITH 2-WIRE ANALOG LINE COIN PORT** | | | | | | | | | | | | | | | | |
| **UNE Port/Loop Combination Rates** | | | | | | | | | | | | | | | | |
| | 2-Wire VG Coin Port/Loop Combo – Zone 1 | | 1 | | | 12.70 | | | | | | | | | | |
| | 2-Wire VG Coin Port/Loop Combo – Zone 2 | | 2 | | | 21.19 | | | | | | | | | | |
| | 2-Wire VG Coin Port/Loop Combo – Zone 3 | | 3 | | | 34.80 | | | | | | | | | | |
| **UNE Loop Rates** | | | | | | | | | | | | | | | | |
| | 2-Wire Voice Grade Loop (SL1) - Zone 1 | | 1 | UEPCO | UEPLX | 11.55 | | | | | | | | | | |
| | 2-Wire Voice Grade Loop (SL1) - Zone 2 | | 2 | UEPCO | UEPLX | 20.04 | | | | | | | | | | |
| | 2-Wire Voice Grade Loop (SL1) - Zone 3 | | 3 | UEPCO | UEPLX | 33.65 | | | | | | | | | | |
| **2-Wire Voice Grade Line Ports (COIN)** | | | | | | | | | | | | | | | | |
| | 2-Wire Coin 2-Way without Operator Screening and without Blocking (AL, KY, LA, MS) | | | UEPCO | UEPRF | 1.15 | 40.19 | 19.83 | 24.91 | 6.63 | | | | | | |
| | 2-Wire Coin 2-Way with Operator Screening (AL, KY) | | | UEPCO | UEPRE | 1.15 | 40.19 | 19.83 | 24.91 | 6.63 | | | | | | |
| | 2-Wire Coin 2-Way with Operator Screening and Blocking: 011, 900/976, 1+DDD (AL, KY, LA, MS) | | | UEPCO | UEPRA | 1.15 | 40.19 | 19.83 | 24.91 | 6.63 | | | | | | |

| UNBUNDLED NETWORK ELEMENTS - Alabama | | | | | | | | | | | | | | Attachment: 2 | | Exhibit: A | |
|---|---|---|---|---|---|---|---|---|---|---|---|---|---|---|---|---|---|
| CATEGORY | RATE ELEMENTS | Interim | Zone | BCS | USOC | RATES ($) | | | | | Svc Order Submitted Elec per LSR | Svc Order Submitted Manually per LSR | Incremental Charge - Manual Svc Order vs. Electronic-1st | Incremental Charge - Manual Svc Order vs. Electronic-Add'l | Incremental Charge - Manual Svc Order vs. Electronic-Disc 1st | Incremental Charge - Manual Svc Order vs. Electronic-Disc Add'l |
| | | | | | | Rec | Nonrecurring | | Nonrecurring Disconnect | | OSS Rates ($) | | | | | |
| | | | | | | | First | Add'l | First | Add'l | SOMEC | SOMAN | SOMAN | SOMAN | SOMAN | SOMAN |
| | 2-Wire Coin 2-Way with Operator Screening and 011 Blocking (AL, LA, MS) | | | UEPCO | UEPRB | 1.15 | 40.19 | 19.83 | 24.91 | 6.63 | | | | | | |
| | 2-Wire Coin 2-Way with Operator Screening & Blocking: 900/976, 1+DDD, 011+, & Local (AL, KY, LA, MS) | | | UEPCO | UEPCD | 1.15 | 40.19 | 19.83 | 24.91 | 6.63 | | | | | | |
| | 2-Wire Coin Outward with Operator Screening and 011 Blocking (AL, FL) | | | UEPCO | UEPRK | 1.15 | 40.19 | 19.83 | 24.91 | 6.63 | | | | | | |
| | 2-Wire Coin Outward with Operator Screening and Blocking: 011, 900/976, 1+DDD (AL, KY, LA, MS) | | | UEPCO | UEPRH | 1.15 | 40.19 | 19.83 | 24.91 | 6.63 | | | | | | |
| | 2-Wire Coin Outward Operator Screening & Blocking: 900/976, 1+DDD, 011+, and Local (AL, KY, LA, MS) | | | UEPCO | UEPCN | 1.15 | 40.19 | 19.83 | 24.91 | 6.63 | | | | | | |
| | 2-Wire 2-Way Smartline with 900/976 (all states except LA) | | | UEPCO | UEPCK | 1.15 | 40.19 | 19.83 | 24.91 | 6.63 | | | | | | |
| | 2-Wire Coin Outward Smartline with 900/976 (all states except LA) | | | UEPCO | UEPCR | 1.15 | 40.19 | 19.83 | 24.91 | 6.63 | | | | | | |
| **ADDITIONAL UNE COIN PORT/LOOP (RC)** | | | | | | | | | | | | | | | | | |
| | UNE Coin Port/Loop Combo Usage (Flat Rate) | | | UEPCO | URECU | 1.56 | 0.00 | 0.00 | 0.00 | 0.00 | | | | | | |
| **LOCAL NUMBER PORTABILITY** | | | | | | | | | | | | | | | | | |
| | Local Number Portability (1 per port) | | | UEPCO | LNPCX | 0.35 | | | | | | | | | | |
| **NONRECURRING CHARGES - CURRENTLY COMBINED** | | | | | | | | | | | | | | | | | |
| | 2-Wire Voice Grade Loop / Line Port Combination - Conversion - Switch-as-is | | | UEPCO | USAC2 | | 0.10 | 0.10 | | | | | | | | |
| | 2-Wire Voice Grade Loop / Line Port Combination - Conversion - Switch with change | | | UEPCO | USACC | | 0.10 | 0.10 | | | | | | | | |
| **ADDITIONAL NRCs** | | | | | | | | | | | | | | | | | |
| | 2-Wire Voice Grade Loop/Line Port Combination - Subsequent Activity | | | UEPCO | USAS2 | | 0.00 | 0.00 | | | | | | | | |
| | Unbundled Miscellaneous Rate Element, Tag Loop at End User Premise | | | UEPCO | URETL | | 8.33 | 0.83 | | | | | | | | |
| **2-WIRE VOICE LOOP/ 2WIRE VOICE GRADE IO TRANSPORT/ 2-WIRE LINE PORT (RES)** | | | | | | | | | | | | | | | | | |
| **UNE Port/Loop Combination Rates** | | | | | | | | | | | | | | | | | |
| | 2-Wire VG Loop/IO Tranport/Port Combo - Zone 1 | | 1 | | | 15.76 | | | | | | | | | | |
| | 2-Wire VG Loop/IO Tranport/Port Combo - Zone 2 | | 2 | | | 24.23 | | | | | | | | | | |
| | 2-Wire VG Loop/IO Tranport/Port Combo - Zone 3 | | 3 | | | 37.52 | | | | | | | | | | |
| **UNE Loop Rates** | | | | | | | | | | | | | | | | | |
| | 2-Wire Voice Grade Loop (SL2) - Zone 1 | | 1 | UEPFR | UECF2 | 14.38 | | | | | | | | | | |
| | 2-Wire Voice Grade Loop (SL2) - Zone 2 | | 2 | UEPFR | UECF2 | 22.85 | | | | | | | | | | |
| | 2-Wire Voice Grade Loop (SL2) - Zone 3 | | 3 | UEPFR | UECF2 | 36.14 | | | | | | | | | | |
| **2-Wire Voice Grade Line Port Rates (Res)** | | | | | | | | | | | | | | | | | |
| | 2-Wire voice unbundled port - residence | | | UEPFR | UEPRL | 1.38 | 90.38 | 57.27 | 48.66 | 8.77 | | | | | | |
| | 2-Wire voice unbundled port with Caller ID - res | | | UEPFR | UEPRC | 1.38 | 90.38 | 57.27 | 48.66 | 8.77 | | | | | | |
| | 2-Wire voice unbundled port outgoing only - res | | | UEPFR | UEPRO | 1.38 | 90.38 | 57.27 | 48.66 | 8.77 | | | | | | |
| | 2-Wire voice Grade unbundled Alabama extended local dialing parity port with Caller ID - res | | | UEPFR | UEPAR | 1.38 | 90.38 | 57.27 | 48.66 | 8.77 | | | | | | |
| | 2-Wire voice unbundles res, low usage line port with Caller ID (LUM) | | | UEPFR | UEPAP | 1.38 | 90.38 | 57.27 | 48.66 | 8.77 | | | | | | |
| | 2-Wire Voice Unbundled Alabama Residence Dialing Plan without Caller ID | | | UEPFR | UEPWA | 1.38 | 90.38 | 57.27 | 48.66 | 8.77 | | | | | | |
| **INTEROFFICE TRANSPORT** | | | | | | | | | | | | | | | | | |
| | Interoffice Transport - Dedicated - 2 Wire Voice Grade - Facility Termination | | | UEPFR | U1TV2 | 21.13 | 40.54 | 27.41 | 16.74 | 6.90 | | | | | | |
| | Interoffice Transport - Dedicated - 2 Wire Voice Grade - Per Mile or Fraction Mile | | | UEPFR | 1L5XX | 0.008838 | | | | | | | | | | |
| **FEATURES** | | | | | | | | | | | | | | | | | |
| | All Features Offered | | | UEPFR | UEPVF | 1.98 | 0.00 | 0.00 | | | | | | | | |
| **LOCAL NUMBER PORTABILITY** | | | | | | | | | | | | | | | | | |
| | Local Number Portability (1 per port) | | | UEPFR | LNPCX | 0.35 | | | | | | | | | | |
| **NONRECURRING CHARGES (NRCs) - CURRENTLY COMBINED** | | | | | | | | | | | | | | | | | |
| | 2-Wire Loop / Dedicated IO Transport / 2 Wire Line Port Combination - Conversion - Switch-as-is | | | UEPFR | USAC2 | | 8.48 | 1.87 | | | | | | | | |

## UNBUNDLED NETWORK ELEMENTS - Alabama

| CATEGORY | RATE ELEMENTS | Interim | Zone | BCS | USOC | RATES ($) | | | | | Svc Order Submitted Elec per LSR | Svc Order Submitted Manually per LSR | Attachment: 2 | | Exhibit: A | |
|---|---|---|---|---|---|---|---|---|---|---|---|---|---|---|---|---|
| | | | | | | | | | | | | | Incremental Charge - Manual Svc Order vs. Electronic-1st | Incremental Charge - Manual Svc Order vs. Electronic-Add'l | Incremental Charge - Manual Svc Order vs. Electronic-Disc 1st | Incremental Charge - Manual Svc Order vs. Electronic-Disc Add'l |
| | | | | | | Rec | Nonrecurring | | Nonrecurring Disconnect | | OSS Rates ($) | | | | | |
| | | | | | | | First | Add'l | First | Add'l | SOMEC | SOMAN | SOMAN | SOMAN | SOMAN | SOMAN |
| | 2-Wire Loop / Dedicated IO Transport / 2 Wire Line Port Combination - Conversion - Switch-With-Change | | | UEPFR | USACC | | 8.48 | 1.87 | | | | | | | | |
| | Unbundled Miscellaneous Rate Element, Tag Designed Loop at End User Premise | | | UEPFR | URETN | | 11.21 | 1.10 | | | | | | | | |
| **2-WIRE VOICE LOOP/ 2WIRE VOICE GRADE IO TRANSPORT/ 2-WIRE LINE PORT (BUS)** | | | | | | | | | | | | | | | | |
| **UNE Port/Loop Combination Rates** | | | | | | | | | | | | | | | | |
| | 2-Wire VG Loop/IO Tranport/Port Combo - Zone 1 | | 1 | | | 15.76 | | | | | | | | | | |
| | 2-Wire VG Loop/IO Tranport/Port Combo - Zone 2 | | 2 | | | 24.23 | | | | | | | | | | |
| | 2-Wire VG Loop/IO Tranport/Port Combo - Zone 3 | | 3 | | | 37.52 | | | | | | | | | | |
| **UNE Loop Rates** | | | | | | | | | | | | | | | | |
| | 2-Wire Voice Grade Loop (SL2) - Zone 1 | | 1 | UEPFB | UECF2 | 14.38 | | | | | | | | | | |
| | 2-Wire Voice Grade Loop (SL2) - Zone 2 | | 2 | UEPFB | UECF2 | 22.85 | | | | | | | | | | |
| | 2-Wire Voice Grade Loop (SL2) - Zone 3 | | 3 | UEPFB | UECF2 | 36.14 | | | | | | | | | | |
| **2-Wire Voice Grade Line Port (Bus)** | | | | | | | | | | | | | | | | |
| | 2-Wire voice unbundled port without Caller ID - bus | | | UEPFB | UEPBL | 1.38 | 90.38 | 57.27 | 48.66 | 8.77 | | | | | | |
| | 2-Wire voice unbundled port with Caller + E484 ID - bus | | | UEPFB | UEPBC | 1.38 | 90.38 | 57.27 | 48.66 | 8.77 | | | | | | |
| | 2-Wire voice unbundled port outgoing only - bus | | | UEPFB | UEPBO | 1.38 | 90.38 | 57.27 | 48.66 | 8.77 | | | | | | |
| | 2-Wire voice Grade unbundled Alabama extended local dialing parity port with Caller ID - bus | | | UEPFB | UEPAW | 1.38 | 90.38 | 57.27 | 48.66 | 8.77 | | | | | | |
| | 2-Wire voice unbundled incoming only port with Caller ID - Bus | | | UEPFB | UEPB1 | 1.38 | 90.38 | 57.27 | 48.66 | 8.77 | | | | | | |
| | 2-Wire Voice Unbundled Alabama Business Dialing Plan without Caller ID | | | UEPFB | UEPWB | 1.38 | 90.38 | 57.27 | 48.66 | 8.77 | | | | | | |
| **LOCAL NUMBER PORTABILITY** | | | | | | | | | | | | | | | | |
| | Local Number Portability (1 per port) | | | UEPFB | LNPCX | 0.35 | | | | | | | | | | |
| **INTEROFFICE TRANSPORT** | | | | | | | | | | | | | | | | |
| | Interoffice Transport - Dedicated - 2 Wire Voice Grade - Facility Termination | | | UEPFB | U1TV2 | 21.13 | 40.54 | 27.41 | 16.74 | 6.90 | | | | | | |
| | Interoffice Transport - Dedicated - 2 Wire Voice Grade - Per Mile or Fraction Mile | | | UEPFB | 1L5XX | 0.008838 | | | | | | | | | | |
| **FEATURES** | | | | | | | | | | | | | | | | |
| | All Features Offered | | | UEPFB | UEPVF | 1.98 | 0.00 | 0.00 | | | | | | | | |
| **NONRECURRING CHARGES (NRCs) - CURRENTLY COMBINED** | | | | | | | | | | | | | | | | |
| | 2-Wire Loop / Dedicated IO Transport / 2 Wire Line Port Combination - Conversion - Switch-as-is | | | UEPFB | USAC2 | | 8.48 | 1.87 | | | | | | | | |
| | 2-Wire Loop / Dedicated IO Transport / 2 Wire Line Port Combination - Conversion - Switch with change | | | UEPFB | USACC | | 8.48 | 1.87 | | | | | | | | |
| | Unbundled Miscellaneous Rate Element, Tag Designed Loop at End User Premise | | | UEPFB | URETN | | 11.21 | 1.10 | | | | | | | | |
| **2-WIRE VOICE LOOP/ 2WIRE VOICE GRADE IO TRANSPORT/ 2-WIRE LINE PORT (PBX)** | | | | | | | | | | | | | | | | |
| **UNE Port/Loop Combination Rates** | | | | | | | | | | | | | | | | |
| | 2-Wire VG Loop/IO Tranport/Port Combo - Zone 1 | | 1 | | | 15.76 | | | | | | | | | | |
| | 2-Wire VG Loop/IO Tranport/Port Combo - Zone 2 | | 2 | | | 24.23 | | | | | | | | | | |
| | 2-Wire VG Loop/IO Tranport/Port Combo - Zone 3 | | 3 | | | 37.52 | | | | | | | | | | |
| **UNE Loop Rates** | | | | | | | | | | | | | | | | |
| | 2-Wire Voice Grade Loop (SL2) - Zone 1 | | 1 | UEPFP | UECF2 | 14.38 | | | | | | | | | | |
| | 2-Wire Voice Grade Loop (SL2) - Zone 2 | | 2 | UEPFP | UECF2 | 22.85 | | | | | | | | | | |
| | 2-Wire Voice Grade Loop (SL2) - Zone 3 | | 3 | UEPFP | UECF2 | 36.14 | | | | | | | | | | |
| **2-Wire Voice Grade Line Port Rates (BUS - PBX)** | | | | | | | | | | | | | | | | |
| | Line Side Unbundled Combination 2-Way PBX Trunk Port - Bus | | | UEPFP | UEPPC | 1.38 | 119.27 | 69.85 | 61.18 | 8.34 | | | | | | |
| | Line Side Unbundled Outward PBX Trunk Port - Bus | | | UEPFP | UEPPO | 1.38 | 119.27 | 69.85 | 61.18 | 8.34 | | | | | | |
| | Line Side Unbundled Incoming PBX Trunk Port - Bus | | | UEPFP | UEPP1 | 1.38 | 119.27 | 69.85 | 61.18 | 8.34 | | | | | | |
| | 2-Wire Voice Unbundled 2-Way Combination PBX Alabama Calling Port | | | UEPFP | UEPA2 | 1.38 | 119.27 | 69.85 | 61.18 | 8.34 | | | | | | |
| | 2-Wire Voice Unbundled PBX LD Terminal Ports | | | UEPFP | UEPLD | 1.38 | 119.27 | 69.85 | 61.18 | 8.34 | | | | | | |
| | 2-Wire Voice Unbundled 2-Way Combination PBX Usage Port | | | UEPFP | UEPXA | 1.38 | 119.27 | 69.85 | 61.18 | 8.34 | | | | | | |
| | 2-Wire Voice Unbundled PBX Toll Terminal Hotel Ports | | | UEPFP | UEPXB | 1.38 | 119.27 | 69.85 | 61.18 | 8.34 | | | | | | |
| | 2-Wire Voice Unbundled PBX LD DDD Terminals Port | | | UEPFP | UEPXC | 1.38 | 119.27 | 69.85 | 61.18 | 8.34 | | | | | | |
| | 2-Wire Voice Unbundled PBX LD Terminal Switchboard Port | | | UEPFP | UEPXD | 1.38 | 119.27 | 69.85 | 61.18 | 8.34 | | | | | | |

## UNBUNDLED NETWORK ELEMENTS - Alabama

| CATEGORY | RATE ELEMENTS | Interim | Zone | BCS | USOC | RATES ($) | | | | | Svc Order Submitted Elec per LSR | Svc Order Submitted Manually per LSR | Attachment: 2 | | Exhibit: A | |
|---|---|---|---|---|---|---|---|---|---|---|---|---|---|---|---|---|
| | | | | | | | | | | | | | Incremental Charge - Manual Svc Order vs. Electronic- 1st | Incremental Charge - Manual Svc Order vs. Electronic- Add'l | Incremental Charge - Manual Svc Order vs. Electronic- Disc 1st | Incremental Charge - Manual Svc Order vs. Electronic- Disc Add'l |
| | | | | | | Rec | Nonrecurring | | Nonrecurring Disconnect | | OSS Rates ($) | | | | | |
| | | | | | | | First | Add'l | First | Add'l | SOMEC | SOMAN | SOMAN | SOMAN | SOMAN | SOMAN |
| | 2-Wire Voice Unbundled PBX LD Terminal Switchboard IDD Capable Port | | | UEPFP | UEPXE | 1.38 | 119.27 | 69.85 | 61.18 | 8.34 | | | | | | |
| | 2-Wire Voice Unbundled 2-Way PBX Hotel/Hospital Economy Administrative Calling Port | | | UEPFP | UEPXL | 1.38 | 119.27 | 69.85 | 61.18 | 8.34 | | | | | | |
| | 2-Wire Voice Unbundled 2-Way PBX Hotel/Hospital Economy Room Calling Port | | | UEPFP | UEPXM | 1.38 | 119.27 | 69.85 | 61.18 | 8.34 | | | | | | |
| | 2-Wire Voice Unbundled 1-Way Outgoing PBX Hotel/Hospital Discount Room Calling Port | | | UEPFP | UEPXO | 1.38 | 119.27 | 69.85 | 61.18 | 8.34 | | | | | | |
| | 2-Wire Voice Unbundled 1-Way Outgoing PBX Measured Port | | | UEPFP | UEPXS | 1.38 | 119.27 | 69.85 | 61.18 | 8.34 | | | | | | |
| **LOCAL NUMBER PORTABILITY** | | | | | | | | | | | | | | | | |
| | Local Number Portability (1 per port) | | | UEPFP | LNPCP | 3.15 | 0.00 | 0.00 | | | | | | | | |
| **INTEROFFICE TRANSPORT** | | | | | | | | | | | | | | | | |
| | Interoffice Transport - Dedicated - 2 Wire Voice Grade - Facility Termination | | | UEPFP | U1TV2 | 21.13 | 40.54 | 27.41 | 16.74 | 6.90 | | | | | | |
| | Interoffice Transport - Dedicated - 2 Wire Voice Grade - Per Mile or Fraction Mile | | | UEPFP | 1L5XX | 0.008838 | | | | | | | | | | |
| **FEATURES** | | | | | | | | | | | | | | | | |
| | All Features Offered | | | UEPFP | UEPVF | 1.98 | 0.00 | 0.00 | | | | | | | | |
| **NONRECURRING CHARGES (NRCs) - CURRENTLY COMBINED** | | | | | | | | | | | | | | | | |
| | 2-Wire Loop / Dedicated IO Transport / 2 Wire Line Port Combination - Conversion - Switch-as-is | | | UEPFP | USAC2 | | 8.48 | 1.87 | | | | | | | | |
| | 2-Wire Loop / Dedicated IO Transport / 2 Wire Line Port Combination - Conversion - Switch with change | | | UEPFP | USACC | | 8.48 | 1.87 | | | | | | | | |
| | Unbundled Miscellaneous Rate Element, Tag Designed Loop at End User Premise | | | UEPFP | URETN | | 11.21 | 1.10 | | | | | | | | |
| **UNBUNDLED PORT/LOOP COMBINATIONS - COST BASED RATES** | | | | | | | | | | | | | | | | |
| **2-WIRE VOICE GRADE LOOP- BUS ONLY - WITH 2-WIRE DID TRUNK PORT** | | | | | | | | | | | | | | | | |
| **UNE Port/Loop Combination Rates** | | | | | | | | | | | | | | | | |
| | 2-Wire VG Loop/2-Wire DID Trunk Port Combo - UNE Zone 1 | | 1 | | | 22.40 | | | | | | | | | | |
| | 2-Wire VG Loop/2-Wire DID Trunk Port Combo - UNE Zone 2 | | 2 | | | 30.88 | | | | | | | | | | |
| | 2-Wire VG Loop/2-Wire DID Trunk Port Combo - UNE Zone 3 | | 3 | | | 44.17 | | | | | | | | | | |
| **UNE Loop Rates** | | | | | | | | | | | | | | | | |
| | 2-Wire Analog Voice Grade Loop - (SL2) - UNE Zone 1 | | 1 | UEPPX | UECD1 | 14.38 | | | | | | | | | | |
| | 2-Wire Analog Voice Grade Loop - (SL2) - UNE Zone 2 | | 2 | UEPPX | UECD1 | 22.85 | | | | | | | | | | |
| | 2-Wire Analog Voice Grade Loop - (SL2) - UNE Zone 3 | | 3 | UEPPX | UECD1 | 36.14 | | | | | | | | | | |
| **UNE Port Rate** | | | | | | | | | | | | | | | | |
| | Exchange Ports - 2-Wire DID Port | | | UEPPX | UEPD1 | 8.02 | 207.31 | 73.74 | 107.14 | 11.20 | | | | | | |
| **NONRECURRING CHARGES - CURRENTLY COMBINED** | | | | | | | | | | | | | | | | |
| | 2-Wire Voice Grade Loop / 2-Wire DID Trunk Port Combination - Switch-as-is | | | UEPPX | USAC1 | | 7.31 | 1.87 | | | | | | | | |
| | 2-Wire Voice Grade Loop / 2-Wire DID Trunk Port Conversion with BellSouth Allowable Changes | | | UEPPX | USA1C | | 7.31 | 1.87 | | | | | | | | |
| **ADDITIONAL NRCs** | | | | | | | | | | | | | | | | |
| | 2-Wire DID Subsequent Activity - Add Trunks, Per Trunk | | | UEPPX | USAS1 | | 26.78 | 26.78 | | | | | | | | |
| | Unbundled Miscellaneous Rate Element, Tag Designed Loop at End User Premise | | | UEPPX | URETN | | 11.21 | 1.10 | | | | | | | | |
| **Telephone Number/Trunk Group Establisment Charges** | | | | | | | | | | | | | | | | |
| | DID Trunk Termination (One Per Port) | | | UEPPX | NDT | 0.00 | 0.00 | 0.00 | | | | | | | | |
| | Additional DID Numbers for each Group of 20 DID Numbers | | | UEPPX | ND4 | 0.00 | 0.00 | 0.00 | | | | | | | | |
| | DID Numbers, Non- consecutive DID Numbers , Per Number | | | UEPPX | ND5 | 0.00 | 0.00 | 0.00 | | | | | | | | |
| | Reserve Non-Consecutive DID numbers | | | UEPPX | ND6 | 0.00 | 0.00 | 0.00 | | | | | | | | |
| | Reserve DID Numbers | | | UEPPX | NDV | 0.00 | 0.00 | 0.00 | | | | | | | | |
| **LOCAL NUMBER PORTABILITY** | | | | | | | | | | | | | | | | |
| | Local Number Portability (1 per port) | | | UEPPX | LNPCP | 3.15 | 0.00 | 0.00 | | | | | | | | |
| **2-WIRE ISDN DIGITAL GRADE LOOP WITH 2-WIRE ISDN DIGITAL LINE SIDE PORT** | | | | | | | | | | | | | | | | |
| **UNE Port/Loop Combination Rates** | | | | | | | | | | | | | | | | |
| | 2W ISDN Digital Grade Loop/2W ISDN Digital Line Side Port - UNE Zone 1 | | 1 | UEPPB | UEPPR | 27.28 | | | | | | | | | | |

| UNBUNDLED NETWORK ELEMENTS - Alabama | | | | | | | | | | | | | | Attachment: 2 | | Exhibit: A | |
|---|---|---|---|---|---|---|---|---|---|---|---|---|---|---|---|---|---|
| CATEGORY | RATE ELEMENTS | Interim | Zone | BCS | USOC | RATES ($) | | | | | Svc Order Submitted Elec per LSR | Svc Order Submitted Manually per LSR | Incremental Charge - Manual Svc Order vs. Electronic-1st | Incremental Charge - Manual Svc Order vs. Electronic-Add'l | Incremental Charge - Manual Svc Order vs. Electronic-Disc 1st | Incremental Charge - Manual Svc Order vs. Electronic-Disc Add'l |
| | | | | | | Rec | Nonrecurring | | Nonrecurring Disconnect | | OSS Rates ($) | | | | | |
| | | | | | | | First | Add'l | First | Add'l | SOMEC | SOMAN | SOMAN | SOMAN | SOMAN | SOMAN |
| | 2W ISDN Digital Grade Loop/2W ISDN Digital Line Side Port - UNE Zone 2 | | 2 | UEPPB UEPPR | | 37.86 | | | | | | | | | | |
| | 2W ISDN Digital Grade Loop/2W ISDN Digital Line Side Port - UNE Zone 3 | | 3 | UEPPB UEPPR | | 53.84 | | | | | | | | | | |
| **UNE Loop Rates** | | | | | | | | | | | | | | | | |
| | 2-Wire ISDN Digital Grade Loop - UNE Zone 1 | | 1 | UEPPB UEPPR | USL2X | 19.03 | | | | | | | | | | |
| | 2-Wire ISDN Digital Grade Loop - UNE Zone 2 | | 2 | UEPPB UEPPR | USL2X | 29.62 | | | | | | | | | | |
| | 2-Wire ISDN Digital Grade Loop - UNE Zone 3 | | 3 | UEPPB UEPPR | USL2X | 45.60 | | | | | | | | | | |
| **UNE Port Rate** | | | | | | | | | | | | | | | | |
| | Exchange Port - 2-Wire ISDN Line Side Port | | | UEPPB UEPPR | UEPPB | 8.24 | 190.01 | 132.76 | 100.67 | 21.28 | | | | | | |
| **NONRECURRING CHARGES - CURRENTLY COMBINED** | | | | | | | | | | | | | | | | |
| | 2-Wire ISDN Digital Grade Loop / 2-Wire ISDN Line Side Port Combination - Conversion | | | UEPPB UEPPR | USACB | 0.00 | 38.51 | 27.02 | | | | | | | | |
| **ADDITIONAL NRCs** | | | | | | | | | | | | | | | | |
| | Unbundled Miscellaneous Rate Element, Tag Designed Loop at End User Premise | | | UEPPB UEPPR | URETN | | 11.21 | 1.10 | | | | | | | | |
| | Unbundled Miscellaneous Rate Element, Tag Loop at End User Premise | | | UEPPB UEPPR | URETL | | 8.33 | 0.83 | | | | | | | | |
| **LOCAL NUMBER PORTABILITY** | | | | | | | | | | | | | | | | |
| | Local Number Portability (1 per port) | | | UEPPB UEPPR | LNPCX | 0.35 | 0.00 | 0.00 | | | | | | | | |
| **B-CHANNEL USER PROFILE ACCESS:** | | | | | | | | | | | | | | | | |
| | CVS/CSD (DMS/5ESS) | | | UEPPB UEPPR | U1UCA | 0.00 | 0.00 | 0.00 | | | | | | | | |
| | CVS (EWSD) | | | UEPPB UEPPR | U1UCB | 0.00 | 0.00 | 0.00 | | | | | | | | |
| | CSD | | | UEPPB UEPPR | U1UCC | 0.00 | 0.00 | 0.00 | | | | | | | | |
| **B-CHANNEL AREA PLUS USER PROFILE ACCESS: (AL,KY,LA,MS SC,MS, & TN)** | | | | | | | | | | | | | | | | |
| | CVS/CSD (DMS/5ESS) | | | UEPPB UEPPR | U1UCD | 0.00 | 0.00 | 0.00 | | | | | | | | |
| | CVS (EWSD) | | | UEPPB UEPPR | U1UCE | 0.00 | 0.00 | 0.00 | | | | | | | | |
| | CSD | | | UEPPB UEPPR | U1UCF | 0.00 | 0.00 | 0.00 | | | | | | | | |
| **USER TERMINAL PROFILE** | | | | | | | | | | | | | | | | |
| | User Terminal Profile (EWSD only) | | | UEPPB UEPPR | U1UMA | 0.00 | 0.00 | 0.00 | | | | | | | | |
| **VERTICAL FEATURES** | | | | | | | | | | | | | | | | |
| | All Vertical Features - One per Channel B User Profile | | | UEPPB UEPPR | UEPVF | 1.98 | 0.00 | 0.00 | | | | | | | | |
| **INTEROFFICE CHANNEL MILEAGE** | | | | | | | | | | | | | | | | |
| | Interoffice Channel mileage each, including first mile and facilities termination | | | UEPPB UEPPR | M1GNC | 21.13 | 40.54 | 27.41 | 16.74 | 6.90 | | | | | | |
| | Interoffice Channel mileage each, additional mile | | | UEPPB UEPPR | M1GNM | 0.008838 | 0.00 | 0.00 | | | | | | | | |
| **4-WIRE DS1 DIGITAL LOOP WITH 4-WIRE ISDN DS1 DIGITAL TRUNK PORT** | | | | | | | | | | | | | | | | |
| **The UNE-P DS1 combination rates below for 4-Wire DS1 Digital Loop with 4-Wire ISDN DS1 Digital Trunk Port in this rate exhibit apply to the embedded base in place as of 10/2/03 until 4/1/04. After 4/1/04 these rates shall revert to tariff rates or a separate agreement.** | | | | | | | | | | | | | | | | |
| **Requests for 4-Wire DS1 Digital Loop with 4-Wire ISDN DS1 Digital Trunk Port after the effective date of this amendment shall be provided pursuant to a separate agreement or tariff at BellSouth's discretion.** | | | | | | | | | | | | | | | | |
| **UNE Port/Loop Combination Rates** | | | | | | | | | | | | | | | | |
| | 4W DS1 Digital Loop/4W ISDN DS1 Digital Trunk Port - UNE Zone 1 | | 1 | UEPPP | | 166.87 | | | | | | | | | | |
| | 4W DS1 Digital Loop/4W ISDN DS1 Digital Trunk Port - UNE Zone 2 | | 2 | UEPPP | | 238.50 | | | | | | | | | | |
| | 4W DS1 Digital Loop/4W ISDN DS1 Digital Trunk Port - UNE Zone 3 | | 3 | UEPPP | | 398.85 | | | | | | | | | | |
| **UNE Loop Rates** | | | | | | | | | | | | | | | | |
| | 4-Wire DS1 Digital Loop - UNE Zone 1 | | 1 | UEPPP | USL4P | 82.55 | | | | | | | | | | |
| | 4-Wire DS1 Digital Loop - UNE Zone 2 | | 2 | UEPPP | USL4P | 154.18 | | | | | | | | | | |
| | 4-Wire DS1 Digital Loop - UNE Zone 3 | | 3 | UEPPP | USL4P | 314.52 | | | | | | | | | | |
| **UNE Port Rate** | | | | | | | | | | | | | | | | |
| | Exchange Ports - 4-Wire ISDN DS1 Port (E:4/1/2004) | | | UEPPP | UEPPP | 84.32 | 456.28 | 259.10 | 123.88 | 31.77 | | | | | | |
| **NONRECURRING CHARGES - CURRENTLY COMBINED** | | | | | | | | | | | | | | | | |
| | 4-Wire DS1 Digital Loop / 4-Wire ISDN DS1 Digital Trunk Port Combination - Conversion -Switch-as-is (E:4/1/2004) | | | UEPPP | USACP | 0.00 | 119.07 | 78.56 | | | | | | | | |
| **ADDITIONAL NRCs** | | | | | | | | | | | | | | | | |

| UNBUNDLED NETWORK ELEMENTS - Alabama | | | | | | | | | | | | | Attachment: 2 | | Exhibit: A | |
|---|---|---|---|---|---|---|---|---|---|---|---|---|---|---|---|---|
| CATEGORY | RATE ELEMENTS | Interim | Zone | BCS | USOC | RATES ($) | | | | | Svc Order Submitted Elec per LSR | Svc Order Submitted Manually per LSR | Incremental Charge - Manual Svc Order vs. Electronic-1st | Incremental Charge - Manual Svc Order vs. Electronic-Add'l | Incremental Charge - Manual Svc Order vs. Electronic-Disc 1st | Incremental Charge - Manual Svc Order vs. Electronic-Disc Add'l |
| | | | | | | Rec | Nonrecurring | | Nonrecurring Disconnect | | OSS Rates ($) | | | | | |
| | | | | | | | First | Add'l | First | Add'l | SOMEC | SOMAN | SOMAN | SOMAN | SOMAN | SOMAN |
| | 4-Wire DS1 Loop/4-W ISDN Digtl Trk Port - Subsqt Actvy-Inward/two way Tel Nos. (except NC) | | | UEPPP | PR7TF | | 0.49 | | | | | | | | | |
| | 4-Wire DS1 Loop / 4-Wire ISDN DS1 Digital Trunk Port - Outward Tel Numbers (All States except NC) | | | UEPPP | PR7TO | | 11.51 | | | | | | | | | |
| | 4-Wire DS1 Loop / 4-Wire ISDN DS1 Digital Trk Port - Subsequent Inward Tel Numbers | | | UEPPP | PR7ZT | | 23.02 | | | | | | | | | |
| | **LOCAL NUMBER PORTABILITY** | | | | | | | | | | | | | | | |
| | Local Number Portability (1 per port) | | | UEPPP | LNPCN | 1.75 | | | | | | | | | | |
| | **INTERFACE (Provsioning Only)** | | | | | | | | | | | | | | | |
| | Voice/Data | | | UEPPP | PR71V | 0.00 | 0.00 | 0.00 | | | | | | | | |
| | Digital Data | | | UEPPP | PR71D | 0.00 | 0.00 | 0.00 | | | | | | | | |
| | Inward Data | | | UEPPP | PR71E | 0.00 | 0.00 | 0.00 | | | | | | | | |
| | **New or Additional "B" Channel** | | | | | | | | | | | | | | | |
| | New or Additional - Voice/Data B Channel | | | UEPPP | PR7BV | 0.00 | 14.53 | | | | | | | | | |
| | New or Additional - Digital Data B Channel | | | UEPPP | PR7BF | 0.00 | 14.53 | | | | | | | | | |
| | New or Additional Inward Data B Channel | | | UEPPP | PR7BD | 0.00 | 14.53 | | | | | | | | | |
| | **CALL TYPES** | | | | | | | | | | | | | | | |
| | Inward | | | UEPPP | PR7C1 | 0.00 | 0.00 | 0.00 | | | | | | | | |
| | Outward | | | UEPPP | PR7CO | 0.00 | 0.00 | 0.00 | | | | | | | | |
| | Two-way | | | UEPPP | PR7CC | 0.00 | 0.00 | 0.00 | | | | | | | | |
| | **Interoffice Channel Mileage** | | | | | | | | | | | | | | | |
| | Fixed Each Including First Mile | | | UEPPP | 1LN1A | 60.34 | 89.27 | 81.81 | 16.35 | 14.44 | | | | | | |
| | Each Airline-Fractional Additional Mile | | | UEPPP | 1LN1B | 0.18 | | | | | | | | | | |
| | **4-WIRE DS1 DIGITAL LOOP WITH 4-WIRE DDITS TRUNK PORT** | | | | | | | | | | | | | | | |
| | **The UNE-P DS1 combination rates below for 4-Wire DS1 Digital Loop with 4-Wire DDITS Trunk Port in this rate exhibit apply to the embedded base in place as of 10/2/03 until 4/1/04. After 4/1/04 these rates shall revert to tariff rates or a separate agreement.** | | | | | | | | | | | | | | | |
| | **Requests for 4-Wire DS1 Digital Loop with 4-Wire DDITS after the effective date of this amendment shall be provided pursuant to a separate agreement or tariff at BellSouth's discretion.** | | | | | | | | | | | | | | | |
| | **UNE Port/Loop Combination Rates** | | | | | | | | | | | | | | | |
| | 4W DS1 Digital Loop/4W DDITS Trunk Port - UNE Zone 1 | | 1 | UEPDC | | 142.64 | | | | | | | | | | |
| | 4W DS1 Digital Loop/4W DDITS Trunk Port - UNE Zone 2 | | 2 | UEPDC | | 214.26 | | | | | | | | | | |
| | 4W DS1 Digital Loop/4W DDITS Trunk Port - UNE Zone 3 | | 3 | UEPDC | | 374.61 | | | | | | | | | | |
| | **UNE Loop Rates** | | | | | | | | | | | | | | | |
| | 4-Wire DS1 Digital Loop - UNE Zone 1 | | 1 | UEPDC | USLDC | 82.55 | | | | | | | | | | |
| | 4-Wire DS1 Digital Loop - UNE Zone 2 | | 2 | UEPDC | USLDC | 154.18 | | | | | | | | | | |
| | 4-Wire DS1 Digital Loop - UNE Zone 3 | | 3 | UEPDC | USLDC | 314.52 | | | | | | | | | | |
| | **UNE Port Rate** | | | | | | | | | | | | | | | |
| | 4-Wire DDITS Digital Trunk Port (E:4/1/2004) | | | UEPDC | UDD1T | 60.09 | 454.49 | 253.23 | 117.29 | 14.17 | | | | | | |
| | **NONRECURRING CHARGES - CURRENTLY COMBINED** | | | | | | | | | | | | | | | |
| | 4-Wire DS1 Digital Loop / 4-Wire DDITS Trunk Port Combination - Switch-as-is (E:4/1/2004) | | | UEPDC | USAC4 | | 129.49 | 67.02 | | | | | | | | |
| | 4-Wire DS1 Digital Loop / 4-Wire DDITS Trunk Port Combination - Conversion with DS1 Changes (E:4/1/2004) | | | UEPDC | USAWA | | 129.49 | 67.02 | | | | | | | | |
| | 4-Wire DS1 Digital Loop / 4-Wire DDITS Trunk Port Combination - Conversion with Change - Trunk (E:4/1/2004) | | | UEPDC | USAWB | | 129.49 | 67.02 | | | | | | | | |
| | **ADDITIONAL NRCs** | | | | | | | | | | | | | | | |
| | 4-Wire DS1 Loop / 4-Wire DDITS Trunk Port - NRC - Subsequent Channel Activation/Chan - 2-Way Trunk | | | UEPDC | UDTTA | | 14.48 | 14.48 | | | | | | | | |
| | 4-Wire DS1 Loop / 4-Wire DDITS Trunk Port - Subsequent Channel Activation/Chan - 1-Way Outward Trunk | | | UEPDC | UDTTB | | 14.48 | 14.48 | | | | | | | | |
| | 4-Wire DS1 Loop / 4-Wire DDITS Trunk Port - Subsqnt Channel Activation/Chan Inward Trunk w/out DID | | | UEPDC | UDTTC | | 14.48 | 14.48 | | | | | | | | |
| | 4-Wire DS1 Loop / 4-Wire DDITS Trunk Port - Subsqnt Chan Activation Per Chan - Inward Trunk with DID | | | UEPDC | UDTTD | | 14.48 | 14.48 | | | | | | | | |
| | 4-Wire DS1 Loop / 4-Wire DDITS Trunk Port - Subsqnt Chan Activation / Chan - 2-Way DID w User Trans | | | UEPDC | UDTTE | | 14.48 | 14.48 | | | | | | | | |
| | **BIPOLAR 8 ZERO SUBSTITUTION** | | | | | | | | | | | | | | | |
| | B8ZS -Superframe Format | | | UEPDC | CCOSF | | 0.00i | 600.00s | | | | | | | | |
| | B8ZS - Extended Superframe Format | | | UEPDC | CCOEF | | 0.00i | 600.00s | | | | | | | | |
| | **Alternate Mark Inversion** | | | | | | | | | | | | | | | |
| | AMI -Superframe Format | | | UEPDC | MCOSF | | 0.00 | 0.00 | | | | | | | | |

| UNBUNDLED NETWORK ELEMENTS - Alabama | | | | | | | | | | | | | | Attachment: 2 | | Exhibit: A | |
|---|---|---|---|---|---|---|---|---|---|---|---|---|---|---|---|---|---|
| CATEGORY | RATE ELEMENTS | Interim | Zone | BCS | USOC | RATES ($) | | | | | Svc Order Submitted Elec per LSR | Svc Order Submitted Manually per LSR | Incremental Charge - Manual Svc Order vs. Electronic-1st | Incremental Charge - Manual Svc Order vs. Electronic-Add'l | Incremental Charge - Manual Svc Order vs. Electronic-Disc 1st | Incremental Charge - Manual Svc Order vs. Electronic-Disc Add'l |
| | | | | | | Rec | Nonrecurring | | Nonrecurring Disconnect | | OSS Rates ($) | | | | | |
| | | | | | | | First | Add'l | First | Add'l | SOMEC | SOMAN | SOMAN | SOMAN | SOMAN | SOMAN |
| | AMI - Extended SuperFrame Format | | | UEPDC | MCOPO | | 0.00 | 0.00 | | | | | | | | |
| | **Telephone Number/Trunk Group Establisment Charges** | | | | | | | | | | | | | | | |
| | Telephone Number for 2-Way Trunk Group | | | UEPDC | UDTGX | 0.00 | | | | | | | | | | |
| | Telephone Number for 1-Way Outward Trunk Group | | | UEPDC | UDTGY | 0.00 | | | | | | | | | | |
| | Telephone Number for 1-Way Inward Trunk Group Without DID | | | UEPDC | UDTGZ | 0.00 | | | | | | | | | | |
| | DID Numbers for each Group of 20 DID Numbers | | | UEPDC | ND4 | 0.00 | 0.00 | | | | | | | | | |
| | DID Numbers, Non- consecutive DID Numbers , Per Number | | | UEPDC | ND5 | 0.00 | | | | | | | | | | |
| | Reserve Non-Consecutive DID Nos. | | | UEPDC | ND6 | 0.00 | 0.00 | 0.00 | | | | | | | | |
| | Reserve DID Numbers | | | UEPDC | NDV | 0.00 | 0.00 | 0.00 | | | | | | | | |
| | **Dedicated DS1 (Interoffice Channel Mileage) - FX/FCO for 4-Wire DS1 Digital Loop with 4-Wire DDITS Trunk Port** | | | | | | | | | | | | | | | |
| | Interoffice Channel Mileage - Fixed rate 0-8 miles (Facilities Termination) | | | UEPDC | 1LNO1 | 60.16 | 89.27 | 81.81 | 16.35 | 14.44 | | | | | | |
| | Interoffice Channel Mileage - Additional rate per mile - 0-8 miles | | | UEPDC | 1LNOA | 0.18 | 0.00 | 0.00 | | | | | | | | |
| | Interoffice Channel Mileage - Fixed rate 9-25 miles (Facilities Termination) | | | UEPDC | 1LNO2 | 0.00 | 0.00 | 0.00 | | | | | | | | |
| | Interoffice Channel Mileage - Additional rate per mile - 9-25 miles | | | UEPDC | 1LNOB | 0.18 | 0.00 | 0.00 | | | | | | | | |
| | Interoffice Channel Mileage - Fixed rate 25+ miles (Facilities Termination) | | | UEPDC | 1LNO3 | 0.00 | 0.00 | 0.00 | 0.00 | | | | | | | |
| | Interoffice Channel Mileage - Additional rate per mile - 25+ miles | | | UEPDC | 1LNOC | 0.18 | 0.00 | 0.00 | | | | | | | | |
| | Local Number Portability, per DS0 Activated | | | UEPDC | LNPCP | 3.15 | 0.00 | 0.00 | 0.00 | | | | | | | |
| | Central Office Terminating Point | | | UEPDC | CTG | 0.00 | | | | | | | | | | |
| | **4-WIRE DS1 LOOP WITH CHANNELIZATION WITH PORT** | | | | | | | | | | | | | | | |
| | **System is 1 DS1 Loop, 1 D4 Channel Bank, and up to 24 Feature Activations** | | | | | | | | | | | | | | | |
| | **Each System can have up to 24 combinations of rates depending on type and number of ports used** | | | | | | | | | | | | | | | |
| | **The UNE-P DS1 combination rates below for 4-Wire DS1 Loop with Channelization with Port in this rate exhibit apply to the embedded base in place as of 10/2/03 until 4/1/04. After 4/1/04 these rates shall revert to tariff rates or a separate agreement.** | | | | | | | | | | | | | | | |
| | **Requests for 4-Wire DS1 Loop with Channelization with Port after the effective date of this amendment shall be provided pursuant to a separate agreement or tariff at BellSouth's discretion.** | | | | | | | | | | | | | | | |
| | **UNE DS1 Loop** | | | | | | | | | | | | | | | |
| | 4-Wire DS1 Loop - UNE Zone 1 | | 1 | UEPMG | USLDC | 82.55 | 0.00 | 0.00 | | | | | | | | |
| | 4-Wire DS1 Loop - UNE Zone 2 | | 2 | UEPMG | USLDC | 154.18 | 0.00 | 0.00 | | | | | | | | |
| | 4-Wire DS1 Loop - UNE Zone 3 | | 3 | UEPMG | USLDC | 314.52 | 0.00 | 0.00 | | | | | | | | |
| | **UNE DSO Channelization Capacities (D4 Channel Bank Configurations)** | | | | | | | | | | | | | | | |
| | 24 DSO Channel Capacity - 1 per DS1 | | | UEPMG | VUM24 | 101.40 | 0.00 | 0.00 | | | | | | | | |
| | 48 DSO Channel Capacity - 1 per 2 DS1s | | | UEPMG | VUM48 | 202.80 | 0.00 | 0.00 | | | | | | | | |
| | 96 DSO Channel Capacity -1per 4 DS1s | | | UEPMG | VUM96 | 405.60 | 0.00 | 0.00 | | | | | | | | |
| | 144 DS0 Channel Capacity - 1 per 6 DS1s | | | UEPMG | VUM14 | 608.40 | 0.00 | 0.00 | | | | | | | | |
| | 192 DS0 Channel Capacity -1 per 8 DS1s | | | UEPMG | VUM19 | 811.20 | 0.00 | 0.00 | | | | | | | | |
| | 240 DS0 Channel Capacity - 1 per 10 DS1s | | | UEPMG | VUM2O | 1,014.00 | 0.00 | 0.00 | | | | | | | | |
| | 288 DS0 Channel Capacity - 1 per 12 DS1s | | | UEPMG | VUM28 | 1,216.80 | 0.00 | 0.00 | | | | | | | | |
| | 384 DS0 Channel Capacity - 1 per 16 DS1s | | | UEPMG | VUM38 | 1,622.40 | 0.00 | 0.00 | | | | | | | | |
| | 480 DS0 Channel Capacity - 1 per 20 DS1s | | | UEPMG | VUM4O | 2,028.00 | 0.00 | 0.00 | | | | | | | | |
| | 576 DS0 Channel Capacity -1 per 24 DS1s | | | UEPMG | VUM57 | 2,433.60 | 0.00 | 0.00 | | | | | | | | |
| | 672 DS0 Channel Capacity - 1 per 28 DS1s | | | UEPMG | VUM67 | 2,839.20 | 0.00 | 0.00 | | | | | | | | |
| | **Non-Recurring Charges (NRC) Associated with 4-Wire DS1 Loop with Channeliztion with Port - Conversion Charge Based on a System** | | | | | | | | | | | | | | | |
| | **A Minimum System configuration is One (1) DS1, One (1) D4 Channel Bank, and Up To 24 DSO Ports with Feature Activations.** | | | | | | | | | | | | | | | |
| | **Multiples of this configuration functioning as one are considered Add'l after the minimum system configuration is counted.** | | | | | | | | | | | | | | | |
| | NRC - Conversion (Currently Combined) with or without BellSouth Allowed Changes | | | UEPMG | USAC4 | 0.00 | 150.48 | 8.36 | | | | | | | | |
| | **System Additions at End User Locations Where 4-Wire DS1 Loop with Channelization with Port Combination Currently Exists and** | | | | | | | | | | | | | | | |
| | **New (Not Currently Combined) in all states, except in Density Zone 1 of Top 8 MSA's** | | | | | | | | | | | | | | | |
| | 1 DS1/D4 Channel Bank - Additionally Add NRC for each Port and Assoc Fea Activation (E:4/1/2004) | | | UEPMG | VUMD4 | 0.00 | 716.11 | 468.04 | 148.75 | 17.65 | | | | | | |
| | **Bipolar 8 Zero Substitution** | | | | | | | | | | | | | | | |
| | Clear Channel Capability Format, superframe - Subsequent Activity Only | | | UEPMG | CCOSF | 0.00 | 0.00i | 600.00s | | | | | | | | |
| | Clear Channel Capability Format - Extended Superframe - Subsequent Activity Only | | | UEPMG | CCOEF | 0.00 | 0.00i | 600.00s | | | | | | | | |

| UNBUNDLED NETWORK ELEMENTS - Alabama | | | | | | | | | | | | | | Attachment: 2 | | Exhibit: A | |
|---|---|---|---|---|---|---|---|---|---|---|---|---|---|---|---|---|---|
| CATEGORY | RATE ELEMENTS | Interim | Zone | BCS | USOC | RATES ($) | | | | | Svc Order Submitted Elec per LSR | Svc Order Submitted Manually per LSR | Incremental Charge - Manual Svc Order vs. Electronic-1st | Incremental Charge - Manual Svc Order vs. Electronic-Add'l | Incremental Charge - Manual Svc Order vs. Electronic-Disc 1st | Incremental Charge - Manual Svc Order vs. Electronic-Disc Add'l |
| | | | | | | Rec | Nonrecurring | | Nonrecurring Disconnect | | OSS Rates ($) | | | | | |
| | | | | | | | First | Add'l | First | Add'l | SOMEC | SOMAN | SOMAN | SOMAN | SOMAN | SOMAN |
| Alternate Mark Inversion (AMI) | | | | | | | | | | | | | | | | |
| | Superframe Format | | | UEPMG | MCOSF | 0.00 | 0.00 | 0.00 | | | | | | | | |
| | Extended Superframe Format | | | UEPMG | MCOPO | 0.00 | 0.00 | 0.00 | | | | | | | | |
| Exchange Ports Associated with 4-Wire DS1 Loop with Channelization with Port | | | | | | | | | | | | | | | | |
| Exchange Ports | | | | | | | | | | | | | | | | |
| | Line Side Combination Channelized PBX Trunk Port - Business (E:4/1/2004) | | | UEPPX | UEPCX | 1.15 | 0.00 | 0.00 | 0.00 | 0.00 | | | | | | |
| | Line Side Outward Channelized PBX Trunk Port - Business (E:4/1/2004) | | | UEPPX | UEPOX | 1.15 | 0.00 | 0.00 | 0.00 | 0.00 | | | | | | |
| | Line Side Inward Only Channelized PBX Trunk Port without DID (E:4/1/2004) | | | UEPPX | UEP1X | 1.15 | 0.00 | 0.00 | 0.00 | 0.00 | | | | | | |
| | 2-Wire Trunk Side Unbundled Channelized DID Trunk Port (E:4/1/2004) | | | UEPPX | UEPDM | 8.05 | 0.00 | 0.00 | 0.00 | 0.00 | | | | | | |
| | Unbundled Exchange Ports, 2-Wire Channelized – Outdial – (AL, KY, LA, MS, & TN)(Conversion from Network Access Service) (E:4/1/2004) | | | UEPPX | UEPCY | 1.15 | | | | | | | | | | |
| | Unbundled Exchange Ports, 2-Wire Channelized – Combination (AL, KY, LA, MS, & TN) (Conversion from Network Access Service) (E:4/1/2004) | | | UEPPX | UEPCT | 1.15 | | | | | | | | | | |
| | 2-Wire Channelized PBX Area Calling Service Combination Port (AL Only) (E:4/1/2004) | | | UEPPX | UEPA4 | 1.15 | 0.00 | 0.00 | | | | | | | | |
| | 2 Wire Channelized PBX Area Calling Service Outgoing Only Port (AL Only) (E:4/1/2004) | | | UEPPX | UEPA3 | 1.15 | 0.00 | 0.00 | | | | | | | | |
| Feature Activations - Unbundled Loop Concentration | | | | | | | | | | | | | | | | |
| | Feature (Service) Activation for each Line Port Terminated in D4 Bank | | | UEPPX | 1PQWM | 0.56 | 54.55 | | | | | | | | | |
| | Feature (Service) Activation for each Trunk Port Terminated in D4 Bank | | | UEPPX | 1PQWU | 0.56 | 77.03 | | | | | | | | | |
| Telephone Number/ Group Establishment Charges for DID Service | | | | | | | | | | | | | | | | |
| | DID Trunk Termination (1 per Port) | | | UEPPX | NDT | 0.00 | 0.00 | 0.00 | | | | | | | | |
| | DID Numbers - groups of 20 - Valid all States | | | UEPPX | ND4 | 0.00 | 0.00 | 0.00 | | | | | | | | |
| | Non-Consecutive DID Numbers - per number | | | UEPPX | ND5 | 0.00 | 0.00 | 0.00 | | | | | | | | |
| | Reserve Non-Consecutive DID Numbers | | | UEPPX | ND6 | 0.00 | 0.00 | 0.00 | | | | | | | | |
| | Reserve DID Numbers | | | UEPPX | NDV | 0.00 | 0.00 | 0.00 | | | | | | | | |
| Local Number Portability | | | | | | | | | | | | | | | | |
| | Local Number Portability - 1 per port | | | UEPPX | LNPCP | 3.15 | 0.00 | 0.00 | | | | | | | | |
| FEATURES - Vertical and Optional | | | | | | | | | | | | | | | | |
| Local Switching Features Offered with Line Side Ports Only | | | | | | | | | | | | | | | | |
| | All Features Available | | | UEPPX | UEPVF | 1.98 | 0.00 | 0.00 | | | | | | | | |
| UNBUNDLED CENTREX PORT/LOOP COMBINATIONS - COST BASED RATES | | | | | | | | | | | | | | | | |
| 1. Cost Based Rates are applied where BellSouth is required by FCC and/or State Commission rule to provide Unbundled Local Switching or Switch Ports. | | | | | | | | | | | | | | | | |
| 2. Features shall apply to the Unbundled Port/Loop Combination - Cost Based Rate section in the same manner as they are applied to the Stand-Alone Unbundled Port section of this Rate Exhibit. | | | | | | | | | | | | | | | | |
| 3. End Office and Tandem Switching Usage and Common Transport Usage rates in the Port section of this rate exhibit shall apply to all combinations of loop/port network elements except for UNE Coin Port/Loop Combinations. | | | | | | | | | | | | | | | | |
| 4. The first and additional Port nonrecurring charges apply to Not Currently Combined Combos. For Currently Combined Combos, the nonrecurring charges shall be those identified in the Nonrecurring - Currently Combined sections. Additional NRCs may apply also and are categorized accordingly. | | | | | | | | | | | | | | | | |
| 5. Market Rates for Unbundled Centrex Port/Loop Combination will be negotiated on an Individual Case Basis, until further notice. | | | | | | | | | | | | | | | | |
| UNE-P CENTREX - 1AESS - (Valid in AL,FL,GA,KY,LA,MS,&TN only) | | | | | | | | | | | | | | | | |
| 2-Wire VG Loop/2-Wire Voice Grade Port (Centrex) Combo | | | | | | | | | | | | | | | | |
| UNE Port/Loop Combination Rates (Non-Design) | | | | | | | | | | | | | | | | |
| | 2-Wire VG Loop/2-Wire Voice Grade Port (Centrex) Port Combo - Non-Design | | 1 | UEP91 | | 12.70 | | | | | | | | | | |
| | 2-Wire VG Loop/2-Wire Voice Grade Port (Centrex)Port Combo - Non-Design | | 2 | UEP91 | | 21.19 | | | | | | | | | | |
| | 2-Wire VG Loop/2-Wire Voice Grade Port (Centrex)Port Combo - Non-Design | | 3 | UEP91 | | 34.80 | | | | | | | | | | |
| UNE Port/Loop Combination Rates (Design) | | | | | | | | | | | | | | | | |
| | 2-Wire VG Loop/2-Wire Voice Grade Port (Centrex) Port Combo - Design | | 1 | UEP91 | | 15.53 | | | | | | | | | | |

| UNBUNDLED NETWORK ELEMENTS - Alabama | | | | | | | | | | | | | | Attachment: 2 | | Exhibit: A | |
|---|---|---|---|---|---|---|---|---|---|---|---|---|---|---|---|---|---|
| CATEGORY | RATE ELEMENTS | Interim | Zone | BCS | USOC | RATES ($) | | | | | Svc Order Submitted Elec per LSR | Svc Order Submitted Manually per LSR | Incremental Charge - Manual Svc Order vs. Electronic-1st | Incremental Charge - Manual Svc Order vs. Electronic-Add'l | Incremental Charge - Manual Svc Order vs. Electronic-Disc 1st | Incremental Charge - Manual Svc Order vs. Electronic-Disc Add'l |
| | | | | | | Rec | Nonrecurring | | Nonrecurring Disconnect | | OSS Rates ($) | | | | | |
| | | | | | | | First | Add'l | First | Add'l | SOMEC | SOMAN | SOMAN | SOMAN | SOMAN | SOMAN |
| | 2-Wire VG Loop/2-Wire Voice Grade Port (Centrex)Port Combo - Design | | 2 | UEP91 | | 24.00 | | | | | | | | | | |
| | 2-Wire VG Loop/2-Wire Voice Grade Port (Centrex)Port Combo - Design | | 3 | UEP91 | | 37.29 | | | | | | | | | | |
| **UNE Loop Rate** | | | | | | | | | | | | | | | | |
| | 2-Wire Voice Grade Loop (SL 1) - Zone 1 | | 1 | UEP91 | UECS1 | 11.55 | | | | | | | | | | |
| | 2-Wire Voice Grade Loop (SL 1) - Zone 2 | | 2 | UEP91 | UECS1 | 20.04 | | | | | | | | | | |
| | 2-Wire Voice Grade Loop (SL 1) - Zone 3 | | 3 | UEP91 | UECS1 | 33.65 | | | | | | | | | | |
| | 2-Wire Voice Grade Loop (SL 2) - Zone 1 | | 1 | UEP91 | UECS2 | 14.38 | | | | | | | | | | |
| | 2-Wire Voice Grade Loop (SL 2) - Zone 2 | | 2 | UEP91 | UECS2 | 22.85 | | | | | | | | | | |
| | 2-Wire Voice Grade Loop (SL 2) - Zone 3 | | 3 | UEP91 | UECS2 | 36.14 | | | | | | | | | | |
| **UNE Ports** | | | | | | | | | | | | | | | | |
| **All States (Except North Carolina and Sout Carolina)** | | | | | | | | | | | | | | | | |
| | 2-Wire Voice Grade Port (Centrex ) Basic Local Area | | | UEP91 | UEPYA | 1.15 | 40.19 | 19.83 | 24.91 | 6.63 | | | | | | |
| | 2-Wire Voice Grade Port (Centrex 800 termination)Basic Local Area | | | UEP91 | UEPYB | 1.15 | 40.19 | 19.83 | 24.91 | 6.63 | | | | | | |
| | 2-Wire Voice Grade Port (Centrex with Caller ID)Note1 Basic Local Area | | | UEP91 | UEPYH | 1.15 | 40.19 | 19.83 | 24.91 | 6.63 | | | | | | |
| | 2-Wire Voice Grade Port (Centrex from diff Serving Wire Center) Note 2, 3 Basic Local Area | | | UEP91 | UEPYM | 1.15 | 90.38 | 57.27 | 48.66 | 8.77 | | | | | | |
| | 2-Wire Voice Grade Port, Diff Serving Wire Center - 800 Service Term - Basic Local Area | | | UEP91 | UEPYZ | 1.15 | 90.38 | 57.27 | 48.66 | 8.77 | | | | | | |
| | 2-Wire Voice Grade Port terminated in on Megalink or equivalent - Basic Local Area | | | UEP91 | UEPY9 | 1.15 | 40.19 | 19.83 | 24.91 | 6.63 | | | | | | |
| | 2-Wire Voice Grade Port Terminated on 800 Service Term - Basic Local Area | | | UEP91 | UEPY2 | 1.15 | 40.19 | 19.83 | 24.91 | 6.63 | | | | | | |
| **AL, KY, LA, MS, & TN Only** | | | | | | | | | | | | | | | | |
| | 2-Wire Voice Grade Port (Centrex ) | | | UEP91 | UEPQA | 1.15 | 40.19 | 19.83 | 24.91 | 6.63 | | | | | | |
| | 2-Wire Voice Grade Port (Centrex 800 termination) | | | UEP91 | UEPQB | 1.15 | 40.19 | 19.83 | 24.91 | 6.63 | | | | | | |
| | 2-Wire Voice Grade Port (Centrex with Caller ID)1 | | | UEP91 | UEPQH | 1.15 | 40.19 | 19.83 | 24.91 | 6.63 | | | | | | |
| | 2-Wire Voice Grade Port (Centrex from diff Serving Wire Center)2,3 | | | UEP91 | UEPQM | 1.15 | 90.38 | 57.27 | 48.66 | 8.77 | | | | | | |
| | 2-Wire Voice Grade Port, Diff Serving Wire Center - 2,3 - 800 Service Term | | | UEP91 | UEPQZ | 1.15 | 90.38 | 57.27 | 48.66 | 8.77 | | | | | | |
| | 2-Wire Voice Grade Port terminated in on Megalink or equivalent | | | UEP91 | UEPQ9 | 1.15 | 40.19 | 19.83 | 24.91 | 6.63 | | | | | | |
| | 2-Wire Voice Grade Port Terminated on 800 Service Term | | | UEP91 | UEPQ2 | 1.15 | 40.19 | 19.83 | 24.91 | 6.63 | | | | | | |
| **Local Switching** | | | | | | | | | | | | | | | | |
| | Centrex Intercom Funtionality, per port | | | UEP91 | URECS | 0.5488 | | | | | | | | | | |
| **Local Number Portability** | | | | | | | | | | | | | | | | |
| | Local Number Portability (1 per port) | | | UEP91 | LNPCC | 0.35 | | | | | | | | | | |
| **Features** | | | | | | | | | | | | | | | | |
| | All Standard Features Offered, per port | | | UEP91 | UEPVF | 1.98 | | | | | | | | | | |
| | All Select Features Offered, per port | | | UEP91 | UEPVS | 0.00 | 405.52 | | | | | | | | | |
| | All Centrex Control Features Offered, per port | | | UEP91 | UEPVC | 1.98 | | | | | | | | | | |
| **NARS** | | | | | | | | | | | | | | | | |
| | Unbundled Network Access Register - Combination | | | UEP91 | UARCX | 0.00 | 0.00 | 0.00 | 0.00 | 0.00 | | | | | | |
| | Unbundled Network Access Register - Indial | | | UEP91 | UAR1X | 0.00 | 0.00 | 0.00 | 0.00 | 0.00 | | | | | | |
| | Unbundled Network Access Register - Outdial | | | UEP91 | UAROX | 0.00 | 0.00 | 0.00 | 0.00 | 0.00 | | | | | | |
| **Miscellaneous Terminations** | | | | | | | | | | | | | | | | |
| **2-Wire Trunk Side** | | | | | | | | | | | | | | | | |
| | Trunk Side Terminations, each | | | UEP91 | CENA6 | 8.05 | 119.31 | 18.74 | 59.90 | 3.76 | | | | | | |
| **Interoffice Channel Mileage - 2-Wire** | | | | | | | | | | | | | | | | |
| | Interoffice Channel Facilities Termination - Voice Grade | | | UEP91 | M1GBC | 21.13 | 40.54 | 27.41 | 16.74 | 6.90 | | | | | | |
| | Interoffice Channel mileage, per mile or fraction of mile | | | UEP91 | M1GBM | 0.008838 | | | | | | | | | | |
| **Feature Activations (DS0) Centrex Loops on Channelized DS1 Service** | | | | | | | | | | | | | | | | |
| **D4 Channel Bank Feature Activations** | | | | | | | | | | | | | | | | |
| | Feature Activation on D-4 Channel Bank Centrex Loop Slot | | | UEP91 | 1PQWS | 0.56 | | | | | | | | | | |

| UNBUNDLED NETWORK ELEMENTS - Alabama | | | | | | | | | | | | | Attachment: 2 | | Exhibit: A | |
|---|---|---|---|---|---|---|---|---|---|---|---|---|---|---|---|---|
| CATEGORY | RATE ELEMENTS | Interim | Zone | BCS | USOC | RATES ($) | | | | | Svc Order Submitted Elec per LSR | Svc Order Submitted Manually per LSR | Incremental Charge - Manual Svc Order vs. Electronic-1st | Incremental Charge - Manual Svc Order vs. Electronic-Add'l | Incremental Charge - Manual Svc Order vs. Electronic-Disc 1st | Incremental Charge - Manual Svc Order vs. Electronic-Disc Add'l |
| | | | | | | Rec | Nonrecurring | | Nonrecurring Disconnect | | OSS Rates ($) | | | | | |
| | | | | | | | First | Add'l | First | Add'l | SOMEC | SOMAN | SOMAN | SOMAN | SOMAN | SOMAN |
| | Feature Activation on D-4 Channel Bank FX line Side Loop Slot | | | UEP91 | 1PQW6 | 0.56 | | | | | | | | | | |
| | Feature Activation on D-4 Channel Bank FX Trunk Side Loop Slot | | | UEP91 | 1PQW7 | 0.56 | | | | | | | | | | |
| | Feature Activation on D-4 Channel Bank Centrex Loop Slot - Different Wire Center | | | UEP91 | 1PQWP | 0.56 | | | | | | | | | | |
| | Feature Activation on D-4 Channel Bank Private Line Loop Slot | | | UEP91 | 1PQWV | 0.56 | | | | | | | | | | |
| | Feature Activation on D-4 Channel Bank Tjie Line/Trunk Loop Slot | | | UEP91 | 1PQWQ | 0.56 | | | | | | | | | | |
| | Feature Activation on D-4 Channel Bank WATS Loop Slot | | | UEP91 | 1PQWA | 0.56 | | | | | | | | | | |
| | **Non-Recurring Charges (NRC) Associated with UNE-P Centrex** | | | | | | | | | | | | | | | |
| | Conversion - Currently Combined Switch-As-Is with allowed changes, per port | | | UEP91 | USAC2 | | 0.10 | 0.10 | | | | | | | | |
| | Conversion of Existing Centrex Common Block | | | UEP91 | USACN | | 37.75 | 16.58 | | | | | | | | |
| | New Centrex Standard Common Block | | | UEP91 | M1ACS | 0.00 | 667.21 | | | | | | | | | |
| | New Centrex Customized Common Block | | | UEP91 | M1ACC | 0.00 | 667.21 | | | | | | | | | |
| | Secondary Block, per Block | | | UEP91 | M2CC1 | 0.00 | 78.02 | | | | | | | | | |
| | NAR Establishment Charge, Per Occasion | | | UEP91 | URECA | 0.00 | 72.73 | | | | | | | | | |
| | **Additional Non-Recurring Charges (NRC)** | | | | | | | | | | | | | | | |
| | Unbundled Miscellaneous Rate Element, Tag Loop at End Use Premise | | | UEP91 | URETL | | 8.33 | 0.83 | | | | | | | | |
| | Unbundled Miscellaneous Rate Element, Tag Design Loop at End Use Premise | | | UEP91 | URETN | | 11.21 | 1.10 | | | | | | | | |
| | **UNE-P CENTREX - 5ESS (Valid in All States)** | | | | | | | | | | | | | | | |
| | **2-Wire VG Loop/2-Wire Voice Grade Port (Centrex) Combo** | | | | | | | | | | | | | | | |
| | **UNE Port/Loop Combination Rates (Non-Design)** | | | | | | | | | | | | | | | |
| | 2-Wire VG Loop/2-Wire Voice Grade Port (Centrex) Port Combo - Non-Design | | 1 | UEP95 | | 12.70 | | | | | | | | | | |
| | 2-Wire VG Loop/2-Wire Voice Grade Port (Centrex)Port Combo - Non-Design | | 2 | UEP95 | | 21.19 | | | | | | | | | | |
| | 2-Wire VG Loop/2-Wire Voice Grade Port (Centrex)Port Combo - Non-Design | | 3 | UEP95 | | 34.80 | | | | | | | | | | |
| | **UNE Port/Loop Combination Rates (Design)** | | | | | | | | | | | | | | | |
| | 2-Wire VG Loop/2-Wire Voice Grade Port (Centrex) Port Combo - Design | | 1 | UEP95 | | 15.53 | | | | | | | | | | |
| | 2-Wire VG Loop/2-Wire Voice Grade Port (Centrex)Port Combo - Design | | 2 | UEP95 | | 24.00 | | | | | | | | | | |
| | 2-Wire VG Loop/2-Wire Voice Grade Port (Centrex)Port Combo - Design | | 3 | UEP95 | | 37.29 | | | | | | | | | | |
| | **UNE Loop Rate** | | | | | | | | | | | | | | | |
| | 2-Wire Voice Grade Loop (SL 1) - Zone 1 | | 1 | UEP95 | UECS1 | 11.55 | | | | | | | | | | |
| | 2-Wire Voice Grade Loop (SL 1) - Zone 2 | | 2 | UEP95 | UECS1 | 20.04 | | | | | | | | | | |
| | 2-Wire Voice Grade Loop (SL 1) - Zone 3 | | 3 | UEP95 | UECS1 | 33.65 | | | | | | | | | | |
| | 2-Wire Voice Grade Loop (SL 2) - Zone 1 | | 1 | UEP95 | UECS2 | 14.38 | | | | | | | | | | |
| | 2-Wire Voice Grade Loop (SL 2) - Zone 2 | | 2 | UEP95 | UECS2 | 22.85 | | | | | | | | | | |
| | 2-Wire Voice Grade Loop (SL 2) - Zone 3 | | 3 | UEP95 | UECS2 | 36.14 | | | | | | | | | | |
| | **UNE Port Rate** | | | | | | | | | | | | | | | |
| | **All States** | | | | | | | | | | | | | | | |
| | 2-Wire Voice Grade Port (Centrex ) Basic Local Area | | | UEP95 | UEPYA | 1.15 | 40.19 | 19.83 | 24.91 | 6.63 | | | | | | |
| | 2-Wire Voice Grade Port (Centrex 800 termination) | | | UEP95 | UEPYB | 1.15 | 40.19 | 19.83 | 24.91 | 6.63 | | | | | | |
| | 2-Wire Voice Grade Port (Centrex with Caller ID)1Basic Local Area | | | UEP95 | UEPYH | 1.15 | 40.19 | 19.83 | 24.91 | 6.63 | | | | | | |
| | 2-Wire Voice Grade Port (Centrex from diff Serving Wire Center)2,3 Basic Local Area | | | UEP95 | UEPYM | 1.15 | 90.38 | 57.27 | 48.66 | 8.77 | | | | | | |
| | 2-Wire Voice Grade Port, Diff Serving Wire Center 2,3 - 800 Service Term - Basic Local Area | | | UEP95 | UEPYZ | 1.15 | 90.38 | 57.27 | 48.66 | 8.77 | | | | | | |
| | 2-Wire Voice Grade Port terminated in on Megalink or equivalent - Basic Local Area | | | UEP95 | UEPY9 | 1.15 | 40.19 | 19.83 | 24.91 | 6.63 | | | | | | |

| UNBUNDLED NETWORK ELEMENTS - Alabama | | | | | | | | | | | | | | Attachment: 2 | | Exhibit: A | |
|---|---|---|---|---|---|---|---|---|---|---|---|---|---|---|---|---|---|
| CATEGORY | RATE ELEMENTS | Interim | Zone | BCS | USOC | RATES ($) | | | | | Svc Order Submitted Elec per LSR | Svc Order Submitted Manually per LSR | Incremental Charge - Manual Svc Order vs. Electronic-1st | Incremental Charge - Manual Svc Order vs. Electronic-Add'l | Incremental Charge - Manual Svc Order vs. Electronic-Disc 1st | Incremental Charge - Manual Svc Order vs. Electronic-Disc Add'l |
| | | | | | | Rec | Nonrecurring | | Nonrecurring Disconnect | | OSS Rates ($) | | | | | |
| | | | | | | | First | Add'l | First | Add'l | SOMEC | SOMAN | SOMAN | SOMAN | SOMAN | SOMAN |
| | 2-Wire Voice Grade Port Terminated on 800 Service Term - Basic Local Area | | | UEP95 | UEPY2 | 1.15 | 40.19 | 19.83 | 24.91 | 6.63 | | | | | | |
| AL, KY, LA, MS, SC, & TN Only | | | | | | | | | | | | | | | | |
| | 2-Wire Voice Grade Port (Centrex ) | | | UEP95 | UEPQA | 1.15 | 40.19 | 19.83 | 24.91 | 6.63 | | | | | | |
| | 2-Wire Voice Grade Port (Centrex 800 termination) | | | UEP95 | UEPQB | 1.15 | 40.19 | 19.83 | 24.91 | 6.63 | | | | | | |
| | 2-Wire Voice Grade Port (Centrex with Caller ID)1 | | | UEP95 | UEPQH | 1.15 | 40.19 | 19.83 | 24.91 | 6.63 | | | | | | |
| | 2-Wire Voice Grade Port (Centrex from diff Serving Wire Center)2,3 | | | UEP95 | UEPQM | 1.15 | 90.38 | 57.27 | 48.66 | 8.77 | | | | | | |
| | 2-Wire Voice Grade Port, Diff Serving Wire Center - 800 Service Term 2,3 | | | UEP95 | UEPQZ | 1.15 | 90.38 | 57.27 | 48.66 | 8.77 | | | | | | |
| | 2-Wire Voice Grade Port terminated in on Megalink or equivalent | | | UEP95 | UEPQ9 | 1.15 | 40.19 | 19.83 | 24.91 | 6.63 | | | | | | |
| | 2-Wire Voice Grade Port Terminated on 800 Service Term | | | UEP95 | UEPQ2 | 1.15 | 40.19 | 19.83 | 24.91 | 6.63 | | | | | | |
| Local Switching | | | | | | | | | | | | | | | | |
| | Centrex Intercom Funtionality, per port | | | UEP95 | URECS | 0.5488 | | | | | | | | | | |
| Local Number Portability | | | | | | | | | | | | | | | | |
| | Local Number Portability (1 per port) | | | UEP95 | LNPCC | 0.35 | | | | | | | | | | |
| Features | | | | | | | | | | | | | | | | |
| | All Standard Features Offered, per port | | | UEP95 | UEPVF | 1.98 | | | | | | | | | | |
| | All Select Features Offered, per port | | | UEP95 | UEPVS | 0.00 | 405.52 | | | | | | | | | |
| | All Centrex Control Features Offered, per port | | | UEP95 | UEPVC | 1.98 | | | | | | | | | | |
| NARS | | | | | | | | | | | | | | | | |
| | Unbundled Network Access Register - Combination | | | UEP95 | UARCX | 0.00 | 0.00 | 0.00 | 0.00 | 0.00 | | | | | | |
| | Unbundled Network Access Register - Indial | | | UEP95 | UAR1X | 0.00 | 0.00 | 0.00 | 0.00 | 0.00 | | | | | | |
| | Unbundled Network Access Register - Outdial | | | UEP95 | UAROX | 0.00 | 0.00 | 0.00 | 0.00 | 0.00 | | | | | | |
| Miscellaneous Terminations | | | | | | | | | | | | | | | | |
| 2-Wire Trunk Side | | | | | | | | | | | | | | | | |
| | Trunk Side Terminations, each | | | UEP95 | CEND6 | 8.05 | 119.31 | 18.74 | 59.90 | 3.76 | | | | | | |
| 4-Wire Digital (1.544 Megabits) | | | | | | | | | | | | | | | | |
| | DS1 Circuit Terminations, each | | | UEP95 | M1HD1 | 60.09 | 202.02 | 95.69 | 72.59 | 2.46 | | | | | | |
| | DS0 Channels Activated, each | | | UEP95 | M1HDO | 0.00 | 14.48 | | | | | | | | | |
| Interoffice Channel Mileage - 2-Wire | | | | | | | | | | | | | | | | |
| | Interoffice Channel Facilities Termination | | | UEP95 | M1GBC | 21.13 | 40.54 | 27.41 | 16.74 | 6.90 | | | | | | |
| | Interoffice Channel mileage, per mile or fraction of mile | | | UEP95 | M1GBM | 0.008838 | | | | | | | | | | |
| Feature Activations (DS0) Centrex Loops on Channelized DS1 Service | | | | | | | | | | | | | | | | |
| D4 Channel Bank Feature Activations | | | | | | | | | | | | | | | | |
| | Feature Activation on D-4 Channel Bank Centrex Loop Slot | | | UEP95 | 1PQWS | 0.56 | | | | | | | | | | |
| | Feature Activation on D-4 Channel Bank FX line Side Loop Slot | | | UEP95 | 1PQW6 | 0.56 | | | | | | | | | | |
| | Feature Activation on D-4 Channel Bank FX Trunk Side Loop Slot | | | UEP95 | 1PQW7 | 0.56 | | | | | | | | | | |
| | Feature Activation on D-4 Channel Bank Centrex Loop Slot - Different Wire Center | | | UEP95 | 1PQWP | 0.56 | | | | | | | | | | |
| | Feature Activation on D-4 Channel Bank Private Line Loop Slot | | | UEP95 | 1PQWV | 0.56 | | | | | | | | | | |
| | Feature Activation on D-4 Channel Bank Tjie Line/Trunk Loop Slot | | | UEP95 | 1PQWQ | 0.56 | | | | | | | | | | |
| | Feature Activation on D-4 Channel Bank WATS Loop Slot | | | UEP95 | 1PQWA | 0.56 | | | | | | | | | | |
| Non-Recurring Charges (NRC) Associated with UNE-P Centrex | | | | | | | | | | | | | | | | |
| | NRC Conversion Currently Combined Switch-As-Is with allowed changes, per port | | | UEP95 | USAC2 | | 0.10 | 0.10 | | | | | | | | |
| | Conversion of Existing Centrex Common Block, each | | | UEP95 | USACN | | 37.75 | 16.58 | | | | | | | | |
| | New Centrex Standard Common Block | | | UEP95 | M1ACS | 0.00 | 667.21 | | | | | | | | | |
| | New Centrex Customized Common Block | | | UEP95 | M1ACC | 0.00 | 667.21 | | | | | | | | | |
| | NAR Establishment Charge, Per Occasion | | | UEP95 | URECA | 0.00 | 72.73 | | | | | | | | | |
| Additional Non-Recurring Charges (NRC) | | | | | | | | | | | | | | | | |
| | Unbundled Miscellaneous Rate Element, Tag Loop at End Use Premise | | | UEP95 | URETL | | 8.33 | 0.83 | | | | | | | | |

| UNBUNDLED NETWORK ELEMENTS - Alabama | | | | | | | | | | | | | | Attachment: 2 | | Exhibit: A | |
|---|---|---|---|---|---|---|---|---|---|---|---|---|---|---|---|---|---|
| CATEGORY | RATE ELEMENTS | Interim | Zone | BCS | USOC | RATES ($) | | | | | Svc Order Submitted Elec per LSR | Svc Order Submitted Manually per LSR | Incremental Charge - Manual Svc Order vs. Electronic-1st | Incremental Charge - Manual Svc Order vs. Electronic-Add'l | Incremental Charge - Manual Svc Order vs. Electronic-Disc 1st | Incremental Charge - Manual Svc Order vs. Electronic-Disc Add'l |
| | | | | | | Rec | Nonrecurring | | Nonrecurring Disconnect | | OSS Rates ($) | | | | | |
| | | | | | | | First | Add'l | First | Add'l | SOMEC | SOMAN | SOMAN | SOMAN | SOMAN | SOMAN |
| | Unbundled Miscellaneous Rate Element, Tag Design Loop at End Use Premise | | | UEP95 | URETN | | 11.21 | 1.10 | | | | | | | | |
| | **UNE-P CENTREX - DMS100 (Valid in All States)** | | | | | | | | | | | | | | | |
| | **2-Wire VG Loop/2-Wire Voice Grade Port (Centrex) Combo** | | | | | | | | | | | | | | | |
| | **UNE Port/Loop Combination Rates (Non-Design)** | | | | | | | | | | | | | | | |
| | 2-Wire VG Loop/2-Wire Voice Grade Port (Centrex) Port Combo - Non-Design | | 1 | UEP9D | | 12.70 | | | | | | | | | | |
| | 2-Wire VG Loop/2-Wire Voice Grade Port (Centrex)Port Combo - Non-Design | | 2 | UEP9D | | 21.19 | | | | | | | | | | |
| | 2-Wire VG Loop/2-Wire Voice Grade Port (Centrex)Port Combo - Non-Design | | 3 | UEP9D | | 34.80 | | | | | | | | | | |
| | **UNE Port/Loop Combination Rates (Design)** | | | | | | | | | | | | | | | |
| | 2-Wire VG Loop/2-Wire Voice Grade Port (Centrex) Port Combo - Design | | 1 | UEP9D | | 15.53 | | | | | | | | | | |
| | 2-Wire VG Loop/2-Wire Voice Grade Port (Centrex)Port Combo - Design | | 2 | UEP9D | | 24.00 | | | | | | | | | | |
| | 2-Wire VG Loop/2-Wire Voice Grade Port (Centrex)Port Combo - Design | | 3 | UEP9D | | 37.29 | | | | | | | | | | |
| | **UNE Loop Rate** | | | | | | | | | | | | | | | |
| | 2-Wire Voice Grade Loop (SL 1) - Zone 1 | | 1 | UEP9D | UECS1 | 11.55 | | | | | | | | | | |
| | 2-Wire Voice Grade Loop (SL 1) - Zone 2 | | 2 | UEP9D | UECS1 | 20.04 | | | | | | | | | | |
| | 2-Wire Voice Grade Loop (SL 1) - Zone 3 | | 3 | UEP9D | UECS1 | 33.65 | | | | | | | | | | |
| | 2-Wire Voice Grade Loop (SL 2) - Zone 1 | | 1 | UEP9D | UECS2 | 14.38 | | | | | | | | | | |
| | 2-Wire Voice Grade Loop (SL 2) - Zone 2 | | 2 | UEP9D | UECS2 | 22.85 | | | | | | | | | | |
| | 2-Wire Voice Grade Loop (SL 2) - Zone 3 | | 3 | UEP9D | UECS2 | 36.14 | | | | | | | | | | |
| | **UNE Port Rate** | | | | | | | | | | | | | | | |
| | **ALL STATES** | | | | | | | | | | | | | | | |
| | 2-Wire Voice Grade Port (Centrex ) Basic Local Area | | | UEP9D | UEPYA | 1.15 | 40.19 | 19.83 | 24.91 | 6.63 | | | | | | |
| | 2-Wire Voice Grade Port (Centrex 800 termination)Basic Local Area | | | UEP9D | UEPYB | 1.15 | 40.19 | 19.83 | 24.91 | 6.63 | | | | | | |
| | 2-Wire Voice Grade Port (Centrex / EBS-PSET)3Basic Local Area | | | UEP9D | UEPYC | 1.15 | 40.19 | 19.83 | 24.91 | 6.63 | | | | | | |
| | 2-Wire Voice Grade Port (Centrex / EBS-M5009)3Basic Local Area | | | UEP9D | UEPYD | 1.15 | 40.19 | 19.83 | 24.91 | 6.63 | | | | | | |
| | 2-Wire Voice Grade Port (Centrex / EBS-M5209))3 Basic Local Area | | | UEP9D | UEPYE | 1.15 | 40.19 | 19.83 | 24.91 | 6.63 | | | | | | |
| | 2-Wire Voice Grade Port (Centrex / EBS-M5112))3 Basic Local Area | | | UEP9D | UEPYF | 1.15 | 40.19 | 19.83 | 24.91 | 6.63 | | | | | | |
| | 2-Wire Voice Grade Port (Centrex / EBS-M5312))3Basic Local Area | | | UEP9D | UEPYG | 1.15 | 40.19 | 19.83 | 24.91 | 6.63 | | | | | | |
| | 2-Wire Voice Grade Port (Centrex / EBS-M5008))3 Basic Local Area | | | UEP9D | UEPYT | 1.15 | 40.19 | 19.83 | 24.91 | 6.63 | | | | | | |
| | 2-Wire Voice Grade Port (Centrex / EBS-M5208))3 Basic Local Area | | | UEP9D | UEPYU | 1.15 | 40.19 | 19.83 | 24.91 | 6.63 | | | | | | |
| | 2-Wire Voice Grade Port (Centrex / EBS-M5216))3 Basic Local Area | | | UEP9D | UEPYV | 1.15 | 40.19 | 19.83 | 24.91 | 6.63 | | | | | | |
| | 2-Wire Voice Grade Port (Centrex / EBS-M5316))3 Basic Local Area | | | UEP9D | UEPY3 | 1.15 | 40.19 | 19.83 | 24.91 | 6.63 | | | | | | |
| | 2-Wire Voice Grade Port (Centrex with Caller ID) Basic Local Area | | | UEP9D | UEPYH | 1.15 | 40.19 | 19.83 | 24.91 | 6.63 | | | | | | |
| | 2-Wire Voice Grade Port (Centrex/Caller ID/Msg Wtg Lamp Indication))4 Basic Local Area | | | UEP9D | UEPYW | 1.15 | 40.19 | 19.83 | 24.91 | 6.63 | | | | | | |
| | 2-Wire Voice Grade Port (Centrex/Msg Wtg Lamp Indication))4 Basic Local Area | | | UEP9D | UEPYJ | 1.15 | 40.19 | 19.83 | 24.91 | 6.63 | | | | | | |
| | 2-Wire Voice Grade Port (Centrex from diff Serving Wire Center) 2,3-Basic Local Area | | | UEP9D | UEPYM | 1.15 | 90.38 | 57.27 | 48.66 | 8.77 | | | | | | |
| | 2-Wire Voice Grade Port (Centrex/differ SWC /EBS-PSET)2,3,4 Basic Local Area | | | UEP9D | UEPYO | 1.15 | 90.38 | 57.27 | 48.66 | 8.77 | | | | | | |

## UNBUNDLED NETWORK ELEMENTS - Alabama

| CATEGORY | | RATE ELEMENTS | Interim | Zone | BCS | USOC | RATES ($) | | | | | Svc Order Submitted Elec per LSR | Svc Order Submitted Manually per LSR | Attachment: 2 | | Exhibit: A | |
|---|---|---|---|---|---|---|---|---|---|---|---|---|---|---|---|---|---|
| | | | | | | | | | | | | | | Incremental Charge - Manual Svc Order vs. Electronic- 1st | Incremental Charge - Manual Svc Order vs. Electronic- Add'l | Incremental Charge - Manual Svc Order vs. Electronic- Disc 1st | Incremental Charge - Manual Svc Order vs. Electronic- Disc Add'l |
| | | | | | | | Rec | Nonrecurring | | Nonrecurring Disconnect | | OSS Rates ($) | | | | | |
| | | | | | | | | First | Add'l | First | Add'l | SOMEC | SOMAN | SOMAN | SOMAN | SOMAN | SOMAN |
| | | 2-Wire Voice Grade Port (Centrex/differ SWC /EBS-M5009)2,3,4 Basic Local Area | | | UEP9D | UEPYP | 1.15 | 90.38 | 57.27 | 48.66 | 8.77 | | | | | | |
| | | 2-Wire Voice Grade Port (Centrex/differ SWC /EBS-5209)2,3,4 Basic Local Area | | | UEP9D | UEPYQ | 1.15 | 90.38 | 57.27 | 48.66 | 8.77 | | | | | | |
| | | 2-Wire Voice Grade Port (Centrex/differ SWC /EBS-M5112)2,3,4 Basic Local Area | | | UEP9D | UEPYR | 1.15 | 90.38 | 57.27 | 48.66 | 8.77 | | | | | | |
| | | 2-Wire Voice Grade Port (Centrex/differ SWC /EBS-M5312)2,3,4 Basic Local Area | | | UEP9D | UEPYS | 1.15 | 90.38 | 57.27 | 48.66 | 8.77 | | | | | | |
| | | 2-Wire Voice Grade Port (Centrex/differ SWC /EBS-M5008)2,3,4 Basic Local Area | | | UEP9D | UEPY4 | 1.15 | 90.38 | 57.27 | 48.66 | 8.77 | | | | | | |
| | | 2-Wire Voice Grade Port (Centrex/differ SWC /EBS-M5208)2, 3 Basic Local Area | | | UEP9D | UEPY5 | 1.15 | 90.38 | 57.27 | 48.66 | 8.77 | | | | | | |
| | | 2-Wire Voice Grade Port (Centrex/differ SWC /EBS-M5216)2,3,4 Basic Local Area | | | UEP9D | UEPY6 | 1.15 | 90.38 | 57.27 | 48.66 | 8.77 | | | | | | |
| | | 2-Wire Voice Grade Port (Centrex/differ SWC /EBS-M5316)2,3,4 Basic Local Area | | | UEP9D | UEPY7 | 1.15 | 90.38 | 57.27 | 48.66 | 8.77 | | | | | | |
| | | 2-Wire Voice Grade Port, Diff Serving Wire Center - 800 Service Term 2,3 | | | UEP9D | UEPYZ | 1.15 | 90.38 | 57.27 | 48.66 | 8.77 | | | | | | |
| | | 2-Wire Voice Grade Port terminated in on Megalink or equivalent Basic Local Area | | | UEP9D | UEPY9 | 1.15 | 40.19 | 19.83 | 24.91 | 6.63 | | | | | | |
| | | 2-Wire Voice Grade Port Terminated on 800 Service Term Basic Local Area | | | UEP9D | UEPY2 | 1.15 | 40.19 | 19.83 | 24.91 | 6.63 | | | | | | |
| | AL, KY, LA, MS, SC, & TN Only | | | | | | | | | | | | | | | | |
| | | 2-Wire Voice Grade Port (Centrex) | | | UEP9D | UEPQA | 1.15 | 40.19 | 19.83 | 24.91 | 6.63 | | | | | | |
| | | 2-Wire Voice Grade Port (Centrex 800 termination) | | | UEP9D | UEPQB | 1.15 | 40.19 | 19.83 | 24.91 | 6.63 | | | | | | |
| | | 2-Wire Voice Grade Port (Centrex / EBS-PSET)4 | | | UEP9D | UEPQC | 1.15 | 40.19 | 19.83 | 24.91 | 6.63 | | | | | | |
| | | 2-Wire Voice Grade Port (Centrex / EBS-M5009)4 | | | UEP9D | UEPQD | 1.15 | 40.19 | 19.83 | 24.91 | 6.63 | | | | | | |
| | | 2-Wire Voice Grade Port (Centrex / EBS-M5209)4 | | | UEP9D | UEPQE | 1.15 | 40.19 | 19.83 | 24.91 | 6.63 | | | | | | |
| | | 2-Wire Voice Grade Port (Centrex / EBS-M5112)4 | | | UEP9D | UEPQF | 1.15 | 40.19 | 19.83 | 24.91 | 6.63 | | | | | | |
| | | 2-Wire Voice Grade Port (Centrex / EBS-M5312)4 | | | UEP9D | UEPQG | 1.15 | 40.19 | 19.83 | 24.91 | 6.63 | | | | | | |
| | | 2-Wire Voice Grade Port (Centrex / EBS-M5008)4 | | | UEP9D | UEPQT | 1.15 | 40.19 | 19.83 | 24.91 | 6.63 | | | | | | |
| | | 2-Wire Voice Grade Port (Centrex / EBS-M5208)4 | | | UEP9D | UEPQU | 1.15 | 40.19 | 19.83 | 24.91 | 6.63 | | | | | | |
| | | 2-Wire Voice Grade Port (Centrex / EBS-M5216)4 | | | UEP9D | UEPQV | 1.15 | 40.19 | 19.83 | 24.91 | 6.63 | | | | | | |
| | | 2-Wire Voice Grade Port (Centrex / EBS-M5316)4 | | | UEP9D | UEPQ3 | 1.15 | 40.19 | 19.83 | 24.91 | 6.63 | | | | | | |
| | | 2-Wire Voice Grade Port (Centrex with Caller ID) | | | UEP9D | UEPQH | 1.15 | 40.19 | 19.83 | 24.91 | 6.63 | | | | | | |
| | | 2-Wire Voice Grade Port (Centrex/Caller ID/Msg Wtg Lamp Indication)4 | | | UEP9D | UEPQW | 1.15 | 40.19 | 19.83 | 24.91 | 6.63 | | | | | | |
| | | 2-Wire Voice Grade Port (Centrex/Msg Wtg Lamp Indication)4 | | | UEP9D | UEPQJ | 1.15 | 40.19 | 19.83 | 24.91 | 6.63 | | | | | | |
| | | 2-Wire Voice Grade Port (Centrex from diff Serving Wire Center) 2,3 | | | UEP9D | UEPQM | 1.15 | 90.38 | 57.27 | 48.66 | 8.77 | | | | | | |
| | | 2-Wire Voice Grade Port (Centrex/differ SWC /EBS-PSET)2,3,4 | | | UEP9D | UEPQO | 1.15 | 90.38 | 57.27 | 48.66 | 8.77 | | | | | | |
| | | 2-Wire Voice Grade Port (Centrex/differ SWC /EBS-M5009)2,3,4 | | | UEP9D | UEPQP | 1.15 | 90.38 | 57.27 | 48.66 | 8.77 | | | | | | |
| | | 2-Wire Voice Grade Port (Centrex/differ SWC /EBS-5209)2,3,4 | | | UEP9D | UEPQQ | 1.15 | 90.38 | 57.27 | 48.66 | 8.77 | | | | | | |
| | | 2-Wire Voice Grade Port (Centrex/differ SWC /EBS-M5112)2,3,4 | | | UEP9D | UEPQR | 1.15 | 90.38 | 57.27 | 48.66 | 8.77 | | | | | | |
| | | 2-Wire Voice Grade Port (Centrex/differ SWC /EBS-M5312)2,3,4 | | | UEP9D | UEPQS | 1.15 | 90.38 | 57.27 | 48.66 | 8.77 | | | | | | |
| | | 2-Wire Voice Grade Port (Centrex/differ SWC /EBS-M5008)2,3,4 | | | UEP9D | UEPQ4 | 1.15 | 90.38 | 57.27 | 48.66 | 8.77 | | | | | | |
| | | 2-Wire Voice Grade Port (Centrex/differ SWC /EBS-M5208)2,3,4 | | | UEP9D | UEPQ5 | 1.15 | 90.38 | 57.27 | 48.66 | 8.77 | | | | | | |
| | | 2-Wire Voice Grade Port (Centrex/differ SWC /EBS-M5216)2,3,4 | | | UEP9D | UEPQ6 | 1.15 | 90.38 | 57.27 | 48.66 | 8.77 | | | | | | |
| | | 2-Wire Voice Grade Port (Centrex/differ SWC /EBS-M5316)2,3,4 | | | UEP9D | UEPQ7 | 1.15 | 90.38 | 57.27 | 48.66 | 8.77 | | | | | | |

| UNBUNDLED NETWORK ELEMENTS - Alabama | | | | | | | | | | | | | | Attachment: 2 | | Exhibit: A | |
|---|---|---|---|---|---|---|---|---|---|---|---|---|---|---|---|---|---|
| CATEGORY | RATE ELEMENTS | Interim | Zone | BCS | USOC | RATES ($) | | | | | Svc Order Submitted Elec per LSR | Svc Order Submitted Manually per LSR | Incremental Charge - Manual Svc Order vs. Electronic-1st | Incremental Charge - Manual Svc Order vs. Electronic-Add'l | Incremental Charge - Manual Svc Order vs. Electronic-Disc 1st | Incremental Charge - Manual Svc Order vs. Electronic-Disc Add'l |
| | | | | | | Rec | Nonrecurring | | Nonrecurring Disconnect | | OSS Rates ($) | | | | | |
| | | | | | | | First | Add'l | First | Add'l | SOMEC | SOMAN | SOMAN | SOMAN | SOMAN | SOMAN |
| | 2-Wire Voice Grade Port, Diff Serving Wire Center - 800 Service Term 2,3 | | | UEP9D | UEPQZ | 1.15 | 90.38 | 57.27 | 48.66 | 8.77 | | | | | | |
| | 2-Wire Voice Grade Port terminated in on Megalink or equivalent | | | UEP9D | UEPQ9 | 1.15 | 40.19 | 19.83 | 24.91 | 6.63 | | | | | | |
| | 2-Wire Voice Grade Port Terminated on 800 Service Term | | | UEP9D | UEPQ2 | 1.15 | 40.19 | 19.83 | 24.91 | 6.63 | | | | | | |
| **Local Switching** | | | | | | | | | | | | | | | | |
| | Centrex Intercom Funtionality, per port | | | UEP9D | URECS | 0.5488 | | | | | | | | | | |
| **Local Number Portability** | | | | | | | | | | | | | | | | |
| | Local Number Portability (1 per port) | | | UEP9D | LNPCC | 0.35 | | | | | | | | | | |
| **Features** | | | | | | | | | | | | | | | | |
| | All Standard Features Offered, per port | | | UEP9D | UEPVF | 1.98 | | | | | | | | | | |
| | All Select Features Offered, per port | | | UEP9D | UEPVS | 0.00 | 405.52 | | | | | | | | | |
| | All Centrex Control Features Offered, per port | | | UEP9D | UEPVC | 1.98 | | | | | | | | | | |
| **NARS** | | | | | | | | | | | | | | | | |
| | Unbundled Network Access Register - Combination | | | UEP9D | UARCX | 0.00 | 0.00 | 0.00 | 0.00 | 0.00 | | | | | | |
| | Unbundled Network Access Register - Inward | | | UEP9D | UAR1X | 0.00 | 0.00 | 0.00 | 0.00 | 0.00 | | | | | | |
| | Unbundled Network Access Register - Outdial | | | UEP9D | UAROX | 0.00 | 0.00 | 0.00 | 0.00 | 0.00 | | | | | | |
| **Miscellaneous Terminations** | | | | | | | | | | | | | | | | |
| **2-Wire Trunk Side** | | | | | | | | | | | | | | | | |
| | Trunk Side Terminations, each | | | UEP9D | CEND6 | 8.05 | 119.31 | 18.74 | 59.90 | 3.76 | | | | | | |
| **4-Wire Digital (1.544 Megabits)** | | | | | | | | | | | | | | | | |
| | DS1 Circuit Terminations, each | | | UEP9D | M1HD1 | 60.09 | 202.02 | 95.69 | 72.59 | 2.46 | | | | | | |
| | DS0 Channels Activiated per Channel | | | UEP9D | M1HDO | 0.00 | 14.48 | | | | | | | | | |
| **Interoffice Channel Mileage - 2-Wire** | | | | | | | | | | | | | | | | |
| | Interoffice Channel Facilities Termination | | | UEP9D | M1GBC | 21.13 | 40.54 | 27.41 | 16.74 | 6.90 | | | | | | |
| | Interoffice Channel mileage, per mile or fraction of mile | | | UEP9D | M1GBM | 0.008838 | | | | | | | | | | |
| **Feature Activations (DS0) Centrex Loops on Channelized DS1 Service** | | | | | | | | | | | | | | | | |
| **D4 Channel Bank Feature Activations** | | | | | | | | | | | | | | | | |
| | Feature Activation on D-4 Channel Bank Centrex Loop Slot | | | UEP9D | 1PQWS | 0.56 | | | | | | | | | | |
| | Feature Activation on D-4 Channel Bank FX line Side Loop Slot | | | UEP9D | 1PQW6 | 0.56 | | | | | | | | | | |
| | Feature Activation on D-4 Channel Bank FX Trunk Side Loop Slot | | | UEP9D | 1PQW7 | 0.56 | | | | | | | | | | |
| | Feature Activation on D-4 Channel Bank Centrex Loop Slot - Different Wire Center | | | UEP9D | 1PQWP | 0.56 | | | | | | | | | | |
| | Feature Activation on D-4 Channel Bank Private Line Loop Slot | | | UEP9D | 1PQWV | 0.56 | | | | | | | | | | |
| | Feature Activation on D-4 Channel Bank Tjie Line/Trunk Loop Slot | | | UEP9D | 1PQWQ | 0.56 | | | | | | | | | | |
| | Feature Activation on D-4 Channel Bank WATS Loop Slot | | | UEP9D | 1PQWA | 0.56 | | | | | | | | | | |
| **Non-Recurring Charges (NRC) Associated with UNE-P Centrex** | | | | | | | | | | | | | | | | |
| | NRC Conversion Currently Combined Switch-As-Is with allowed changes, per port | | | UEP9D | USAC2 | | 0.10 | 0.10 | | | | | | | | |
| | Conversion of existing Centrex Common Block, each | | | UEP9D | USACN | | 37.75 | 16.58 | | | | | | | | |
| | New Centrex Standard Common Block | | | UEP9D | M1ACS | 0.00 | 667.21 | | | | | | | | | |
| | New Centrex Customized Common Block | | | UEP9D | M1ACC | 0.00 | 667.21 | | | | | | | | | |
| | NAR Establishment Charge, Per Occasion | | | UEP9D | URECA | 0.00 | 72.73 | | | | | | | | | |
| **Additional Non-Recurring Charges (NRC)** | | | | | | | | | | | | | | | | |
| | Unbundled Miscellaneous Rate Element, Tag Loop at End Use Premise | | | UEP9D | URETL | | 8.33 | 0.83 | | | | | | | | |
| | Unbundled Miscellaneous Rate Element, Tag Design Loop at End Use Premise | | | UEP9D | URETN | | 11.21 | 1.10 | | | | | | | | |
| **UNE-P CENTREX - EWSD (Valid in AL, FL, KY, LA, MS & TN)** | | | | | | | | | | | | | | | | |
| **2-Wire VG Loop/2-Wire Voice Grade Port (Centrex) Combo** | | | | | | | | | | | | | | | | |
| **UNE Port/Loop Combination Rates (Non-Design)** | | | | | | | | | | | | | | | | |
| | 2-Wire VG Loop/2-Wire Voice Grade Port (Centrex) Port Combo - Non-Design | | 1 | UEP9E | | 12.70 | | | | | | | | | | |
| | 2-Wire VG Loop/2-Wire Voice Grade Port (Centrex)Port Combo - Non-Design | | 2 | UEP9E | | 21.19 | | | | | | | | | | |

| UNBUNDLED NETWORK ELEMENTS - Alabama | | | | | | | | | | | | | | Attachment: 2 | | Exhibit: A | |
|---|---|---|---|---|---|---|---|---|---|---|---|---|---|---|---|---|---|
| CATEGORY | RATE ELEMENTS | Interim | Zone | BCS | USOC | RATES ($) | | | | | Svc Order Submitted Elec per LSR | Svc Order Submitted Manually per LSR | Incremental Charge - Manual Svc Order vs. Electronic-1st | Incremental Charge - Manual Svc Order vs. Electronic-Add'l | Incremental Charge - Manual Svc Order vs. Electronic-Disc 1st | Incremental Charge - Manual Svc Order vs. Electronic-Disc Add'l |
| | | | | | | Rec | Nonrecurring | | Nonrecurring Disconnect | | OSS Rates ($) | | | | | |
| | | | | | | | First | Add'l | First | Add'l | SOMEC | SOMAN | SOMAN | SOMAN | SOMAN | SOMAN |
| | 2-Wire VG Loop/2-Wire Voice Grade Port (Centrex)Port Combo - Non-Design | | 3 | UEP9E | | 34.80 | | | | | | | | | | |
| **UNE Port/Loop Combination Rates (Design)** | | | | | | | | | | | | | | | | |
| | 2-Wire VG Loop/2-Wire Voice Grade Port (Centrex) Port Combo - Design | | 1 | UEP9E | | 15.53 | | | | | | | | | | |
| | 2-Wire VG Loop/2-Wire Voice Grade Port (Centrex)Port Combo - Design | | 2 | UEP9E | | 24.00 | | | | | | | | | | |
| | 2-Wire VG Loop/2-Wire Voice Grade Port (Centrex)Port Combo - Design | | 3 | UEP9E | | 37.29 | | | | | | | | | | |
| **UNE Loop Rate** | | | | | | | | | | | | | | | | |
| | 2-Wire Voice Grade Loop (SL 1) - Zone 1 | | 1 | UEP9E | UECS1 | 11.55 | | | | | | | | | | |
| | 2-Wire Voice Grade Loop (SL 1) - Zone 2 | | 2 | UEP9E | UECS1 | 20.04 | | | | | | | | | | |
| | 2-Wire Voice Grade Loop (SL 1) - Zone 3 | | 3 | UEP9E | UECS1 | 33.65 | | | | | | | | | | |
| | 2-Wire Voice Grade Loop (SL 2) - Zone 1 | | 1 | UEP9E | UECS2 | 14.38 | | | | | | | | | | |
| | 2-Wire Voice Grade Loop (SL 2) - Zone 2 | | 2 | UEP9E | UECS2 | 22.85 | | | | | | | | | | |
| | 2-Wire Voice Grade Loop (SL 2) - Zone 3 | | 3 | UEP9E | UECS2 | 36.14 | | | | | | | | | | |
| **UNE Port Rate** | | | | | | | | | | | | | | | | |
| **AL, FL, KY, LA, MS, & TN only** | | | | | | | | | | | | | | | | |
| | 2-Wire Voice Grade Port (Centrex ) Basic Local Area | | | UEP9E | UEPYA | 1.15 | 40.19 | 19.83 | 24.91 | 6.63 | | | | | | |
| | 2-Wire Voice Grade Port (Centrex 800 termination)Basic Local Area | | | UEP9E | UEPYB | 1.15 | 40.19 | 19.83 | 24.91 | 6.63 | | | | | | |
| | 2-Wire Voice Grade Port (Centrex with Caller ID)1Basic Local Area | | | UEP9E | UEPYH | 1.15 | 40.19 | 19.83 | 24.91 | 6.63 | | | | | | |
| | 2-Wire Voice Grade Port (Centrex from diff Serving Wire Center)2,3 Basic Local Area | | | UEP9E | UEPYM | 1.15 | 90.38 | 57.27 | 48.66 | 8.77 | | | | | | |
| | 2-Wire Voice Grade Port, Diff Serving Wire Center 2,3 - 800 Service Term - Basic Local Area | | | UEP9E | UEPYZ | 1.15 | 90.38 | 57.27 | 48.66 | 8.77 | | | | | | |
| | 2-Wire Voice Grade Port terminated in on Megalink or equivalent - Basic Local Area | | | UEP9E | UEPY9 | 1.15 | 40.19 | 19.83 | 24.91 | 6.63 | | | | | | |
| | 2-Wire Voice Grade Port Terminated on 800 Service Term - Basic Local Area | | | UEP9E | UEPY2 | 1.15 | 40.19 | 19.83 | 24.91 | 6.63 | | | | | | |
| **AL, KY, LA, MS, & TN Only** | | | | | | | | | | | | | | | | |
| | 2-Wire Voice Grade Port (Centrex ) | | | UEP9E | UEPQA | 1.15 | 40.19 | 19.83 | 24.91 | 6.63 | | | | | | |
| | 2-Wire Voice Grade Port (Centrex 800 termination) | | | UEP9E | UEPQB | 1.15 | 40.19 | 19.83 | 24.91 | 6.63 | | | | | | |
| | 2-Wire Voice Grade Port (Centrex with Caller ID)1 | | | UEP9E | UEPQH | 1.15 | 40.19 | 19.83 | 24.91 | 6.63 | | | | | | |
| | 2-Wire Voice Grade Port (Centrex from diff Serving Wire Center)2,3 | | | UEP9E | UEPQM | 1.15 | 90.38 | 57.27 | 48.66 | 8.77 | | | | | | |
| | 2-Wire Voice Grade Port, Diff Serving Wire Center 2,3 - 800 Service Term | | | UEP9E | UEPQZ | 1.15 | 90.38 | 57.27 | 48.66 | 8.77 | | | | | | |
| | 2-Wire Voice Grade Port terminated in on Megalink or equivalent | | | UEP9E | UEPQ9 | 1.15 | 40.19 | 19.83 | 24.91 | 6.63 | | | | | | |
| | 2-Wire Voice Grade Port Terminated on 800 Service Term | | | UEP9E | UEPQ2 | 1.15 | 40.19 | 19.83 | 24.91 | 6.63 | | | | | | |
| **Local Switching** | | | | | | | | | | | | | | | | |
| | Centrex Intercom Funtionality, per port | | | UEP9E | URECS | 0.5488 | | | | | | | | | | |
| **Local Number Portability** | | | | | | | | | | | | | | | | |
| | Local Number Portability (1 per port) | | | UEP9E | LNPCC | 0.35 | | | | | | | | | | |
| **Features** | | | | | | | | | | | | | | | | |
| | All Standard Features Offered, per port | | | UEP9E | UEPVF | 1.98 | | | | | | | | | | |
| | All Select Features Offered, per port | | | UEP9E | UEPVS | 0.00 | 405.52 | | | | | | | | | |
| | All Centrex Control Features Offered, per port | | | UEP9E | UEPVC | 1.98 | | | | | | | | | | |
| **NARS** | | | | | | | | | | | | | | | | |
| | Unbundled Network Access Register - Combination | | | UEP9E | UARCX | 0.00 | 0.00 | 0.00 | 0.00 | 0.00 | | | | | | |
| | Unbundled Network Access Register - Indial | | | UEP9E | UAR1X | 0.00 | 0.00 | 0.00 | 0.00 | 0.00 | | | | | | |
| | Unbundled Network Access Register - Outdial | | | UEP9E | UAROX | 0.00 | 0.00 | 0.00 | 0.00 | 0.00 | | | | | | |
| **Miscellaneous Terminations** | | | | | | | | | | | | | | | | |
| **2-Wire Trunk Side** | | | | | | | | | | | | | | | | |
| | Trunk Side Terminations, each | | | UEP9E | CEND6 | 8.05 | 119.31 | 18.74 | 59.90 | 3.76 | | | | | | |
| **4-Wire Digital (1.544 Megabits)** | | | | | | | | | | | | | | | | |
| | DS1 Circuit Terminations, each | | | UEP9E | M1HD1 | 60.09 | 202.02 | 95.69 | 72.59 | 2.46 | | | | | | |

| UNBUNDLED NETWORK ELEMENTS - Alabama | | | | | | | | | | | | | Attachment: 2 | | Exhibit: A | |
|---|---|---|---|---|---|---|---|---|---|---|---|---|---|---|---|---|
| CATEGORY | RATE ELEMENTS | Interim | Zone | BCS | USOC | RATES ($) | | | | | Svc Order Submitted Elec per LSR | Svc Order Submitted Manually per LSR | Incremental Charge - Manual Svc Order vs. Electronic-1st | Incremental Charge - Manual Svc Order vs. Electronic-Add'l | Incremental Charge - Manual Svc Order vs. Electronic-Disc 1st | Incremental Charge - Manual Svc Order vs. Electronic-Disc Add'l |
| | | | | | | Rec | Nonrecurring | | Nonrecurring Disconnect | | OSS Rates ($) | | | | | |
| | | | | | | | First | Add'l | First | Add'l | SOMEC | SOMAN | SOMAN | SOMAN | SOMAN | SOMAN |
| | DS0 Channel Activated Per Channel | | | UEP9E | M1HDO | 0.00 | 14.48 | | | | | | | | | |
| Interoffice Channel Mileage - 2-Wire | | | | | | | | | | | | | | | | |
| | Interoffice Channel Facilities Termination | | | UEP9E | M1GBC | 21.13 | 40.54 | 27.41 | 16.74 | 6.90 | | | | | | |
| | Interoffice Channel mileage, per mile or fraction of mile | | | UEP9E | M1GBM | 0.008838 | | | | | | | | | | |
| Feature Activations (DS0) Centrex Loops on Channelized DS1 Service | | | | | | | | | | | | | | | | |
| D4 Channel Bank Feature Activations | | | | | | | | | | | | | | | | |
| | Feature Activation on D-4 Channel Bank Centrex Loop Slot | | | UEP9E | 1PQWS | 0.56 | | | | | | | | | | |
| | Feature Activation on D-4 Channel Bank FX line Side Loop Slot | | | UEP9E | 1PQW6 | 0.56 | | | | | | | | | | |
| | Feature Activation on D-4 Channel Bank FX Trunk Side Loop Slot | | | UEP9E | 1PQW7 | 0.56 | | | | | | | | | | |
| | Feature Activation on D-4 Channel Bank Centrex Loop Slot - Different Wire Center | | | UEP9E | 1PQWP | 0.56 | | | | | | | | | | |
| | Feature Activation on D-4 Channel Bank Private Line Loop Slot | | | UEP9E | 1PQWV | 0.56 | | | | | | | | | | |
| | Feature Activation on D-4 Channel Bank Tjie Line/Trunk Loop Slot | | | UEP9E | 1PQWQ | 0.56 | | | | | | | | | | |
| | Feature Activation on D-4 Channel Bank WATS Loop Slot | | | UEP9E | 1PQWA | 0.56 | | | | | | | | | | |
| Non-Recurring Charges (NRC) Associated with UNE-P Centrex | | | | | | | | | | | | | | | | |
| | NRC Conversion Currently Combined Switch-As-Is with allowed changes, per port | | | UEP9E | USAC2 | | 0.10 | 0.10 | | | | | | | | |
| | Conversion of Existing Centrex Common Block, each | | | UEP9E | USACN | | 37.75 | 16.58 | | | | | | | | |
| | New Centrex Standard Common Block | | | UEP9E | M1ACS | 0.00 | 667.21 | | | | | | | | | |
| | New Centrex Customized Common Block | | | UEP9E | M1ACC | 0.00 | 667.21 | | | | | | | | | |
| | NAR Establishment Charge, Per Occasion | | | UEP9E | URECA | 0.00 | 72.73 | | | | | | | | | |
| Additional Non-Recurring Charges (NRC) | | | | | | | | | | | | | | | | |
| | Unbundled Miscellaneous Rate Element, Tag Loop at End Use Premise | | | UEP9E | URETL | | 8.33 | 0.83 | | | | | | | | |
| | Unbundled Miscellaneous Rate Element, Tag Design Loop at End Use Premise | | | UEP9E | URETN | | 11.21 | 1.10 | | | | | | | | |
| UNE-P CENTREX - DCO - Valid in AL, KY, LA, MS, & TN) | | | | | | | | | | | | | | | | |
| 2-Wire VG Loop/2-Wire Voice Grade Port (Centrex) Combo | | | | | | | | | | | | | | | | |
| UNE Port/Loop Combination Rates (Non-Design) | | | | | | | | | | | | | | | | |
| | 2-Wire VG Loop/2-Wire Voice Grade Port (Centrex) Port Combo - Non-Design | | 1 | UEP93 | | 12.70 | | | | | | | | | | |
| | 2-Wire VG Loop/2-Wire Voice Grade Port (Centrex)Port Combo - Non-Design | | 2 | UEP93 | | 21.19 | | | | | | | | | | |
| | 2-Wire VG Loop/2-Wire Voice Grade Port (Centrex)Port Combo - Non-Design | | 3 | UEP93 | | 34.80 | | | | | | | | | | |
| UNE Port/Loop Combination Rates (Design) | | | | | | | | | | | | | | | | |
| | 2-Wire VG Loop/2-Wire Voice Grade Port (Centrex) Port Combo - Design | | 1 | UEP93 | | 15.53 | | | | | | | | | | |
| | 2-Wire VG Loop/2-Wire Voice Grade Port (Centrex)Port Combo - Design | | 2 | UEP93 | | 24.00 | | | | | | | | | | |
| | 2-Wire VG Loop/2-Wire Voice Grade Port (Centrex)Port Combo - Design | | 3 | UEP93 | | 37.29 | | | | | | | | | | |
| UNE Loop Rate | | | | | | | | | | | | | | | | |
| | 2-Wire Voice Grade Loop (SL 1) - Zone 1 | | 1 | UEP93 | UECS1 | 11.55 | | | | | | | | | | |
| | 2-Wire Voice Grade Loop (SL 1) - Zone 2 | | 2 | UEP93 | UECS1 | 20.04 | | | | | | | | | | |
| | 2-Wire Voice Grade Loop (SL 1) - Zone 3 | | 3 | UEP93 | UECS1 | 33.65 | | | | | | | | | | |
| | 2-Wire Voice Grade Loop (SL 2) - Zone 1 | | 1 | UEP93 | UECS2 | 14.38 | | | | | | | | | | |
| | 2-Wire Voice Grade Loop (SL 2) - Zone 2 | | 2 | UEP93 | UECS2 | 22.85 | | | | | | | | | | |
| | 2-Wire Voice Grade Loop (SL 2) - Zone 3 | | 3 | UEP93 | UECS2 | 36.14 | | | | | | | | | | |
| UNE Port Rate | | | | | | | | | | | | | | | | |
| AL, KY, LA, MS, & TN only | | | | | | | | | | | | | | | | |
| | 2-Wire Voice Grade Port (Centrex ) Basic Local Area | | | UEP93 | UEPYA | 1.15 | 40.19 | 19.83 | 24.91 | 6.63 | | | | | | |
| | 2-Wire Voice Grade Port (Centrex 800 termination)Basic Local Area | | | UEP93 | UEPYB | 1.15 | 40.19 | 19.83 | 24.91 | 6.63 | | | | | | |

## UNBUNDLED NETWORK ELEMENTS - Alabama

| CATEGORY | RATE ELEMENTS | Interim | Zone | BCS | USOC | RATES ($) | | | | | Svc Order Submitted Elec per LSR | Svc Order Submitted Manually per LSR | Attachment: 2 Incremental Charge - Manual Svc Order vs. Electronic- 1st | Attachment: 2 Incremental Charge - Manual Svc Order vs. Electronic- Add'l | Exhibit: A Incremental Charge - Manual Svc Order vs. Electronic- Disc 1st | Exhibit: A Incremental Charge - Manual Svc Order vs. Electronic- Disc Add'l |
|---|---|---|---|---|---|---|---|---|---|---|---|---|---|---|---|---|
| | | | | | | Rec | Nonrecurring | | Nonrecurring Disconnect | | OSS Rates ($) | | | | | |
| | | | | | | | First | Add'l | First | Add'l | SOMEC | SOMAN | SOMAN | SOMAN | SOMAN | SOMAN |
| | 2-Wire Voice Grade Port (Centrex with Caller ID)1Basic Local Area | | | UEP93 | UEPYH | 1.15 | 40.19 | 19.83 | 24.91 | 6.63 | | | | | | |
| | 2-Wire Voice Grade Port (Centrex from diff Serving Wire Center)2,3 Basic Local Area | | | UEP93 | UEPYM | 1.15 | 90.38 | 57.27 | 48.66 | 8.77 | | | | | | |
| | 2-Wire Voice Grade Port, Diff Serving Wire Center - 2,3 - 800 Service Term - Basic Local Area | | | UEP93 | UEPYZ | 1.15 | 90.38 | 57.27 | 48.66 | 8.77 | | | | | | |
| | 2-Wire Voice Grade Port terminated in on Megalink or equivalent - Basic Local Area | | | UEP93 | UEPY9 | 1.15 | 40.19 | 19.83 | 24.91 | 6.63 | | | | | | |
| | 2-Wire Voice Grade Port Terminated on 800 Service Term - Basic Local Area | | | UEP93 | UEPY2 | 1.15 | 40.19 | 19.83 | 24.91 | 6.63 | | | | | | |
| | 2-Wire Voice Grade Port (Centrex ) | | | UEP93 | UEPQA | 1.15 | 40.19 | 19.83 | 24.91 | 6.63 | | | | | | |
| | 2-Wire Voice Grade Port (Centrex 800 termination) | | | UEP93 | UEPQB | 1.15 | 40.19 | 19.83 | 24.91 | 6.63 | | | | | | |
| | 2-Wire Voice Grade Port (Centrex with Caller ID)1 | | | UEP93 | UEPQH | 1.15 | 40.19 | 19.83 | 24.91 | 6.63 | | | | | | |
| | 2-Wire Voice Grade Port (Centrex from diff Serving Wire Center)2,3 | | | UEP93 | UEPQM | 1.15 | 90.38 | 57.27 | 48.66 | 8.77 | | | | | | |
| | 2-Wire Voice Grade Port, Diff Serving Wire Center - 2,3 -800 Service Term | | | UEP93 | UEPQZ | 1.15 | 90.38 | 57.27 | 48.66 | 8.77 | | | | | | |
| | 2-Wire Voice Grade Port terminated in on Megalink or equivalent | | | UEP93 | UEPQ9 | 1.15 | 40.19 | 19.83 | 24.91 | 6.63 | | | | | | |
| | 2-Wire Voice Grade Port Terminated on 800 Service Term | | | UEP93 | UEPQ2 | 1.15 | 40.19 | 19.83 | 24.91 | 6.63 | | | | | | |
| **Local Switching** | | | | | | | | | | | | | | | | |
| | Centrex Intercom Funtionality, per port | | | UEP93 | URECS | 0.5488 | | | | | | | | | | |
| **Local Number Portability** | | | | | | | | | | | | | | | | |
| | Local Number Portability (1 per port) | | | UEP93 | LNPCC | 0.35 | | | | | | | | | | |
| **Features** | | | | | | | | | | | | | | | | |
| | All Standard Features Offered, per port | | | UEP93 | UEPVF | 1.98 | | | | | | | | | | |
| | All Centrex Control Features Offered, per port | | | UEP93 | UEPVC | 1.98 | | | | | | | | | | |
| **NARS** | | | | | | | | | | | | | | | | |
| | Unbundled Network Access Register - Combination | | | UEP93 | UARCX | 0.00 | 0.00 | 0.00 | 0.00 | 0.00 | | | | | | |
| | Unbundled Network Access Register - Indial | | | UEP93 | UAR1X | 0.00 | 0.00 | 0.00 | 0.00 | 0.00 | | | | | | |
| | Unbundled Network Access Register - Outdial | | | UEP93 | UAROX | 0.00 | 0.00 | 0.00 | 0.00 | 0.00 | | | | | | |
| **Miscellaneous Terminations** | | | | | | | | | | | | | | | | |
| **2-Wire Trunk Side** | | | | | | | | | | | | | | | | |
| | Trunk Side Terminations, each | | | UEP93 | CEND6 | 8.05 | 119.31 | 18.74 | 59.90 | 3.76 | | | | | | |
| **4-Wire Digital (1.544 Megabits)** | | | | | | | | | | | | | | | | |
| | DS1 Circuit Terminations, each | | | UEP93 | M1HD1 | 60.09 | 202.02 | 95.69 | 72.59 | 2.46 | | | | | | |
| | DS0 Channels Activated, Per Channel | | | UEP93 | M1HDO | 0.00 | 14.48 | | | | | | | | | |
| **Interoffice Channel Mileage - 2-Wire** | | | | | | | | | | | | | | | | |
| | Interoffice Channel Facilities Termination | | | UEP93 | M1GBC | 21.13 | 40.54 | 27.41 | 16.74 | 6.90 | | | | | | |
| | Interoffice Channel mileage, per mile or fraction of mile | | | UEP93 | M1GBM | 0.008838 | | | | | | | | | | |
| **Feature Activations (DS0) Centrex Loops on Channelized DS1 Service** | | | | | | | | | | | | | | | | |
| **D4 Channel Bank Feature Activations** | | | | | | | | | | | | | | | | |
| | Feature Activation on D-4 Channel Bank Centrex Loop Slot | | | UEP93 | 1PQWS | 0.56 | | | | | | | | | | |
| | Feature Activation on D-4 Channel Bank FX Line Side Loop Slot | | | UEP93 | 1PQW6 | 0.56 | | | | | | | | | | |
| | Feature Activation on D-4 Channel Bank FX Trunk Side Loop Slot | | | UEP93 | 1PQW7 | 0.56 | | | | | | | | | | |
| | Feature Activation on D-4 Channel Bank Centrex Loop Slot - Different Wire Center | | | UEP93 | 1PQWP | 0.56 | | | | | | | | | | |
| | Feature Activation on D-4 Channel Bank Private Line Loop Slot | | | UEP93 | 1PQWV | 0.56 | | | | | | | | | | |
| | Feature Activation on D-4 Channel Bank Tie Line/Trunk Loop Slot | | | UEP93 | 1PQWQ | 0.56 | | | | | | | | | | |
| | Feature Activation on D-4 Channel Bank WATS Loop Slot | | | UEP93 | 1PQWA | 0.56 | | | | | | | | | | |
| **Non-Recurring Charges (NRC) Associated with UNE-P Centrex** | | | | | | | | | | | | | | | | |
| | NRC Conversion Currently Combined Switch-As-Is with allowed changes, per port | | | UEP93 | USAC2 | | 0.10 | 0.10 | | | | | | | | |
| | Conversion of Existing Centrex Common Block, each | | | UEP93 | USACN | | 37.75 | 16.58 | | | | | | | | |
| | New Centrex Standard Common Block | | | UEP93 | M1ACS | 0.00 | 667.21 | | | | | | | | | |

| UNBUNDLED NETWORK ELEMENTS - Alabama | | | | | | | | | | | | | Attachment: 2 | | Exhibit: A | |
|---|---|---|---|---|---|---|---|---|---|---|---|---|---|---|---|---|
| CATEGORY | RATE ELEMENTS | Interim | Zone | BCS | USOC | RATES ($) | | | | | Svc Order Submitted Elec per LSR | Svc Order Submitted Manually per LSR | Incremental Charge - Manual Svc Order vs. Electronic-1st | Incremental Charge - Manual Svc Order vs. Electronic-Add'l | Incremental Charge - Manual Svc Order vs. Electronic-Disc 1st | Incremental Charge - Manual Svc Order vs. Electronic-Disc Add'l |
| | | | | | | Rec | Nonrecurring | | Nonrecurring Disconnect | | OSS Rates ($) | | | | | |
| | | | | | | | First | Add'l | First | Add'l | SOMEC | SOMAN | SOMAN | SOMAN | SOMAN | SOMAN |
| | New Centrex Customized Common Block | | | UEP93 | M1ACC | 0.00 | 667.21 | | | | | | | | | |
| | NAR Establishment Charge, Per Occasion | | | UEP93 | URECA | 0.00 | 72.73 | | | | | | | | | |
| **Additional Non-Recurring Charges (NRC)** | | | | | | | | | | | | | | | | |
| | Unbundled Miscellaneous Rate Element, Tag Loop at End Use Premise | | | UEP93 | URETL | | 8.33 | 0.83 | | | | | | | | |
| | Unbundled Miscellaneous Rate Element, Tag Design Loop at End Use Premise | | | UEP93 | URETN | | 11.21 | 1.10 | | | | | | | | |
| **Note 1 - Required Port for Centrex Control in 1AESS, 5ESS & EWSD** | | | | | | | | | | | | | | | | |
| **Note 2 - Requres Interoffice Channel Mileage** | | | | | | | | | | | | | | | | |
| **Note 3 - Installation is combination of Installation charge for SL2 Loop and Port** | | | | | | | | | | | | | | | | |
| **Note 4 - Requires Specific Customer Premises Equipment** | | | | | | | | | | | | | | | | |
| **Note: Rates displaying an "R" in Interim column are interim and subject to rate true-up as set forth in General Terms and Conditions.** | | | | | | | | | | | | | | | | |

CCCS 165 of 1253

| UNBUNDLED NETWORK ELEMENTS - Florida | | | | | | | | | | | | | | Attachment: 2 | | Exhibit: A | |
|---|---|---|---|---|---|---|---|---|---|---|---|---|---|---|---|---|---|
| CATEGORY | RATE ELEMENTS | Interim | Zone | BCS | USOC | RATES ($) | | | | | Svc Order Submitted Elec per LSR | Svc Order Submitted Manually per LSR | Incremental Charge - Manual Svc Order vs. Electronic- 1st | Incremental Charge - Manual Svc Order vs. Electronic- Add'l | Incremental Charge - Manual Svc Order vs. Electronic- Disc 1st | Incremental Charge - Manual Svc Order vs. Electronic- Disc Add'l |
| | | | | | | Rec | Nonrecurring | | Nonrecurring Disconnect | | OSS Rates ($) | | | | | |
| | | | | | | | First | Add'l | First | Add'l | SOMEC | SOMAN | SOMAN | SOMAN | SOMAN | SOMAN |
| | The "Zone" shown in the sections for stand-alone loops or loops as part of a combination refers to Geographically Deaveraged UNE Zones. To view Geographically Deaveraged UNE Zone Designations by Central Office, refer to Internet Website: http://www.interconnection.bellsouth.com/become_a_clec/html/interconnection.htm | | | | | | | | | | | | | | | |
| OPERATIONAL SUPPORT SYSTEMS (OSS) - "REGIONAL RATES" | | | | | | | | | | | | | | | | | |
| | NOTE: (1) CLEC should contact its contract negotiator if it prefers the "state specific" OSS charges as ordered by the State Commissions. The OSS charges currently contained in this rate exhibit are the BellSouth "regional" service ordering charges. CLEC may elect either the state specific Commission ordered rates for the service ordering charges, or CLEC may elect the regional service ordering charge, however, CLEC can not obtain a mixture of the two regardless if CLEC has a interconnection contract established in each of the 9 states. | | | | | | | | | | | | | | | |
| | NOTE: (2) Any element that can be ordered electronically will be billed according to the SOMEC rate listed in this category. Please refer to BellSouth's Local Ordering Handbook (LOH) to determine if a product can be ordered electronically. For those elements that cannot be ordered electronically at present per the LOH, the listed SOMEC rate in this category reflects the charge that would be billed to a CLEC once electronic ordering capabilities come on-line for that element. Otherwise, the manual ordering charge, SOMAN, will be applied to a CLECs bill when it submits an LSR to BellSouth. | | | | | | | | | | | | | | | |
| | OSS - Electronic Service Order Charge, Per Local Service Request (LSR) - UNE Only | | | | SOMEC | | 3.50 | 0.00 | 3.50 | 0.00 | | | | | | |
| | OSS - Manual Service Order Charge, Per Local Service Request (LSR) - UNE Only | | | | SOMAN | | 11.90 | 0.00 | 1.83 | 0.00 | | | | | | |
| UNE SERVICE DATE ADVANCEMENT CHARGE | | | | | | | | | | | | | | | | | |
| | NOTE: The Expedite charge will be maintained commensurate with BellSouth's FCC No.1 Tariff, Section 5 as applicable. | | | | | | | | | | | | | | | |
| | UNE Expedite Charge per Circuit or Line Assignable USOC, per Day | | | UAL, UEANL, UCL, UEF, UDF, UEQ, UDL, UENTW, UDN, UEA, UHL, ULC, USL, U1T12, U1T48, U1TD1, U1TD3, U1TDX, U1TO3, U1TS1, U1TVX, UC1BC, UC1BL, UC1CC, UC1CL, UC1DC, UC1DL, UC1EC, UC1EL, UC1FC, UC1FL, UC1GC, UC1GL, UC1HC, UC1HL, UDL12, UDL48, UDLO3, UDLSX, UE3, ULD12, ULD48, ULDD1, ULDD3, ULDDX, ULDO3, ULDS1, ULDVX, UNC1X, UNC3X, UNCDX, UNCNX, UNCSX, UNCVX, UNLD1, UNLD3, UXTD1, UXTD3, UXTS1, U1TUC, U1TUD, U1TUB, U1TUA | SDASP | | 200.00 | | | | | | | | | |
| UNBUNDLED EXCHANGE ACCESS LOOP | | | | | | | | | | | | | | | | | |
| | 2-WIRE ANALOG VOICE GRADE LOOP | | | | | | | | | | | | | | | | |
| | 2-Wire Analog Voice Grade Loop - Service Level 1- Zone 1 | | 1 | UEANL | UEAL2 | 10.69 | 49.57 | 22.83 | 25.62 | 6.57 | | | | | | |
| | 2-Wire Analog Voice Grade Loop - Service Level 1- Zone 2 | | 2 | UEANL | UEAL2 | 15.20 | 49.57 | 22.83 | 25.62 | 6.57 | | | | | | |
| | 2-Wire Analog Voice Grade Loop - Service Level 1- Zone 3 | | 3 | UEANL | UEAL2 | 26.97 | 49.57 | 22.83 | 25.62 | 6.57 | | | | | | |
| | 2-Wire Analog Voice Grade Loop - Service Level 1- Zone 1 | | 1 | UEANL | UEASL | 10.69 | 49.57 | 22.83 | 25.62 | 6.57 | | | | | | |
| | 2-Wire Analog Voice Grade Loop - Service Level 1- Zone 2 | | 2 | UEANL | UEASL | 15.20 | 49.57 | 22.83 | 25.62 | 6.57 | | | | | | |
| | 2-Wire Analog Voice Grade Loop - Service Level 1- Zone 3 | | 3 | UEANL | UEASL | 26.97 | 49.57 | 22.83 | 25.62 | 6.57 | | | | | | |
| | Unbundled Miscellaneous Rate Element, Tag Loop at End User Premise | | | UEANL | URETL | | 8.33 | 0.83 | | | | | | | | |
| | Loop Testing - Basic 1st Half Hour | | | UEANL | URET1 | | 48.65 | 48.65 | | | | | | | | |
| | Loop Testing - Basic Additional Half Hour | | | UEANL | URETA | | 23.95 | 23.95 | | | | | | | | |

| UNBUNDLED NETWORK ELEMENTS - Florida | | | | | | | | | | | | | | Attachment: 2 | | Exhibit: A | |
|---|---|---|---|---|---|---|---|---|---|---|---|---|---|---|---|---|---|
| CATEGORY | RATE ELEMENTS | Interim | Zone | BCS | USOC | RATES ($) | | | | | Svc Order Submitted Elec per LSR | Svc Order Submitted Manually per LSR | Incremental Charge - Manual Svc Order vs. Electronic-1st | Incremental Charge - Manual Svc Order vs. Electronic-Add'l | Incremental Charge - Manual Svc Order vs. Electronic-Disc 1st | Incremental Charge - Manual Svc Order vs. Electronic-Disc Add'l |
| | | | | | | Rec | Nonrecurring | | Nonrecurring Disconnect | | OSS Rates ($) | | | | | |
| | | | | | | | First | Add'l | First | Add'l | SOMEC | SOMAN | SOMAN | SOMAN | SOMAN | SOMAN |
| | CLEC to CLEC Conversion Charge Without Outside Dispatch (UVL-SL1) | | | UEANL | UREWO | | 15.78 | 8.94 | | | | | | | | |
| | Unbundled Voice Loop, Non-Design Voice Loop, billing for BST providing make-up (Engineering Information - E.I.) | | | UEANL | UEANM | | 13.49 | | | | | | | | | |
| | Manual Order Coordination for UVL-SL1s (per loop) | | | UEANL | UEAMC | | 9.00 | 9.00 | | | | | | | | |
| | Order Coordination for Specified Conversion Time for UVL-SL1 (per LSR) | | | UEANL | OCOSL | | 23.02 | | | | | | | | | |
| | **2-WIRE Unbundled COPPER LOOP** | | | | | | | | | | | | | | | |
| | 2-Wire Unbundled Copper Loop - Non-Designed Zone 1 | | 1 | UEQ | UEQ2X | 7.69 | 44.98 | 20.90 | 24.88 | 6.45 | | | | | | |
| | 2 Wire Unbundled Copper Loop - Non-Designed - Zone 2 | | 2 | UEQ | UEQ2X | 10.92 | 44.98 | 20.90 | 24.88 | 6.45 | | | | | | |
| | 2 Wire Unbundled Copper Loop - Non-Designed - Zone 3 | | 3 | UEQ | UEQ2X | 19.38 | 44.98 | 20.90 | 24.88 | 6.45 | | | | | | |
| | Unbundled Miscellaneous Rate Element, Tag Loop at End User Premise | | | UEQ | URETL | | 8.33 | 0.83 | | | | | | | | |
| | Manual Order Coordination 2 Wire Unbundled Copper Loop - Non-Designed (per loop) | | | UEQ | USBMC | | 9.00 | | | | | | | | | |
| | Unbundled Copper Loop, Non-Design Cooper Loop, billing for BST providing make-up (Engineering Information - E.I.) | | | UEQ | UEQMU | | 13.49 | | | | | | | | | |
| | Loop Testing - Basic 1st Half Hour | | | UEQ | URET1 | | 48.65 | 48.65 | | | | | | | | |
| | Loop Testing - Basic Additional Half Hour | | | UEQ | URETA | | 23.95 | 23.95 | | | | | | | | |
| | CLEC to CLEC Conversion Charge Without Outside Dispatch (UCL-ND) | | | UEQ | UREWO | | 14.27 | 7.43 | | | | | | | | |
| **UNBUNDLED EXCHANGE ACCESS LOOP** | | | | | | | | | | | | | | | | |
| | **2-WIRE ANALOG VOICE GRADE LOOP** | | | | | | | | | | | | | | | |
| | 2 Wire Analog Voice Grade Loop-Service Level 1-Line Splitting-Zone 1 | | 1 | UEPSR UEPSB | UEALS | 10.69 | 49.57 | 22.83 | 25.62 | 6.57 | | | | | | |
| | 2 Wire Analog Voice Grade Loop-Service Level 1-Line Splitting-Zone 1 | | 1 | UEPSR UEPSB | UEABS | 10.69 | 49.57 | 22.83 | 25.62 | 6.57 | | | | | | |
| | 2 Wire Analog Voice Grade Loop- Service Level 1-Line Splitting-Zone 2 | | 2 | UEPSR UEPSB | UEALS | 15.20 | 49.57 | 22.83 | 25.62 | 6.57 | | | | | | |
| | 2 Wire Analog Voice Grade Loop- Service Level 1-Line Splitting-Zone 2 | | 2 | UEPSR UEPSB | UEABS | 15.20 | 49.57 | 22.83 | 25.62 | 6.57 | | | | | | |
| | 2 Wire Analog Voice Grade Loop-Service Level 1-Line Splitting-Zone 3 | | 3 | UEPSR UEPSB | UEALS | 26.97 | 49.57 | 22.83 | 25.62 | 6.57 | | | | | | |
| | 2 Wire Analog Voice Grade Loop-Service Level 1-Line Splitting-Zone 3 | | 3 | UEPSR UEPSB | UEABS | 26.97 | 49.57 | 22.83 | 25.62 | 6.57 | | | | | | |
| **UNBUNDLED EXCHANGE ACCESS LOOP** | | | | | | | | | | | | | | | | |
| | **2-WIRE ANALOG VOICE GRADE LOOP** | | | | | | | | | | | | | | | |
| | 2-Wire Analog Voice Grade Loop - Service Level 2 w/Loop or Ground Start Signaling - Zone 1 | | 1 | UEA | UEAL2 | 12.24 | 135.75 | 82.47 | 63.53 | 12.01 | | | | | | |
| | 2-Wire Analog Voice Grade Loop - Service Level 2 w/Loop or Ground Start Signaling - Zone 2 | | 2 | UEA | UEAL2 | 17.40 | 135.75 | 82.47 | 63.53 | 12.01 | | | | | | |
| | 2-Wire Analog Voice Grade Loop - Service Level 2 w/Loop or Ground Start Signaling - Zone 3 | | 3 | UEA | UEAL2 | 30.87 | 135.75 | 82.47 | 63.53 | 12.01 | | | | | | |
| | Order Coordination for Specified Conversion Time (per LSR) | | | UEA | OCOSL | | 23.02 | | | | | | | | | |
| | 2-Wire Analog Voice Grade Loop - Service Level 2 w/Reverse Battery Signaling - Zone 1 | | 1 | UEA | UEAR2 | 12.24 | 135.75 | 82.47 | 63.53 | 12.01 | | | | | | |
| | 2-Wire Analog Voice Grade Loop - Service Level 2 w/Reverse Battery Signaling - Zone 2 | | 2 | UEA | UEAR2 | 17.40 | 135.75 | 82.47 | 63.53 | 12.01 | | | | | | |
| | 2-Wire Analog Voice Grade Loop - Service Level 2 w/Reverse Battery Signaling - Zone 3 | | 3 | UEA | UEAR2 | 30.87 | 135.75 | 82.47 | 63.53 | 12.01 | | | | | | |
| | Order Coordination for Specified Conversion Time (per LSR) | | | UEA | OCOSL | | 23.02 | | | | | | | | | |
| | CLEC to CLEC Conversion Charge without outside dispatch | | | UEA | UREWO | | 87.71 | 36.35 | | | | | | | | |
| | Loop Tagging - Service Level 2 (SL2) | | | UEA | URETL | | 11.21 | 1.10 | | | | | | | | |
| | **4-WIRE ANALOG VOICE GRADE LOOP** | | | | | | | | | | | | | | | |
| | 4-Wire Analog Voice Grade Loop - Zone 1 | | 1 | UEA | UEAL4 | 18.89 | 167.86 | 115.15 | 67.08 | 15.56 | | | | | | |
| | 4-Wire Analog Voice Grade Loop - Zone 2 | | 2 | UEA | UEAL4 | 26.84 | 167.86 | 115.15 | 67.08 | 15.56 | | | | | | |
| | 4-Wire Analog Voice Grade Loop - Zone 3 | | 3 | UEA | UEAL4 | 47.62 | 167.86 | 115.15 | 67.08 | 15.56 | | | | | | |
| | Order Coordination for Specified Conversion Time (per LSR) | | | UEA | OCOSL | | 23.02 | | | | | | | | | |
| | CLEC to CLEC Conversion Charge without outside dispatch | | | UEA | UREWO | | 87.71 | 36.35 | | | | | | | | |

| UNBUNDLED NETWORK ELEMENTS - Florida | | | | | | | | | | | | | | Attachment: 2 | | Exhibit: A | |
|---|---|---|---|---|---|---|---|---|---|---|---|---|---|---|---|---|---|
| CATEGORY | RATE ELEMENTS | Interim | Zone | BCS | USOC | RATES ($) | | | | | Svc Order Submitted Elec per LSR | Svc Order Submitted Manually per LSR | Incremental Charge - Manual Svc Order vs. Electronic-1st | Incremental Charge - Manual Svc Order vs. Electronic-Add'l | Incremental Charge - Manual Svc Order vs. Electronic-Disc 1st | Incremental Charge - Manual Svc Order vs. Electronic-Disc Add'l |
| | | | | | | Rec | Nonrecurring | | Nonrecurring Disconnect | | OSS Rates ($) | | | | | |
| | | | | | | | First | Add'l | First | Add'l | SOMEC | SOMAN | SOMAN | SOMAN | SOMAN | SOMAN |
| | 2-WIRE ISDN DIGITAL GRADE LOOP | | | | | | | | | | | | | | | |
| | 2-Wire ISDN Digital Grade Loop - Zone 1 | | 1 | UDN | U1L2X | 19.28 | 147.69 | 94.41 | 62.23 | 10.71 | | | | | | |
| | 2-Wire ISDN Digital Grade Loop - Zone 2 | | 2 | UDN | U1L2X | 27.40 | 147.69 | 94.41 | 62.23 | 10.71 | | | | | | |
| | 2-Wire ISDN Digital Grade Loop - Zone 3 | | 3 | UDN | U1L2X | 48.62 | 147.69 | 94.41 | 62.23 | 10.71 | | | | | | |
| | Order Coordination For Specified Conversion Time (per LSR) | | | UDN | OCOSL | | 23.02 | | | | | | | | | |
| | CLEC to CLEC Conversion Charge without outside dispatch | | | UDN | UREWO | | 91.61 | 44.15 | | | | | | | | |
| | 2-WIRE ASYMMETRICAL DIGITAL SUBSCRIBER LINE (ADSL) COMPATIBLE LOOP | | | | | | | | | | | | | | | |
| | 2 Wire Unbundled ADSL Loop including manual service inquiry & facility reservation - Zone 1 | | 1 | UAL | UAL2X | 8.30 | 149.53 | 103.85 | 75.05 | 15.63 | | | | | | |
| | 2 Wire Unbundled ADSL Loop including manual service inquiry & facility reservation - Zone 2 | | 2 | UAL | UAL2X | 11.80 | 149.53 | 103.85 | 75.05 | 15.63 | | | | | | |
| | 2 Wire Unbundled ADSL Loop including manual service inquiry & facility reservation - Zone 3 | | 3 | UAL | UAL2X | 20.94 | 149.53 | 103.85 | 75.05 | 15.63 | | | | | | |
| | Order Coordination for Specified Conversion Time (per LSR) | | | UAL | OCOSL | | 23.02 | | | | | | | | | |
| | 2 Wire Unbundled ADSL Loop without manual service inquiry & facility reservaton - Zone 1 | | 1 | UAL | UAL2W | 8.30 | 124.83 | 71.12 | 60.64 | 9.12 | | | | | | |
| | 2 Wire Unbundled ADSL Loop without manual service inquiry & facility reservaton - Zone 2 | | 2 | UAL | UAL2W | 11.80 | 124.83 | 71.12 | 60.64 | 9.12 | | | | | | |
| | 2 Wire Unbundled ADSL Loop without manual service inquiry & facility reservaton - Zone 3 | | 3 | UAL | UAL2W | 20.94 | 124.83 | 71.12 | 60.64 | 9.12 | | | | | | |
| | Order Coordination for Specified Conversion Time (per LSR) | | | UAL | OCOSL | | 23.02 | | | | | | | | | |
| | CLEC to CLEC Conversion Charge without outside dispatch | | | UAL | UREWO | | 86.19 | 40.39 | | | | | | | | |
| | 2-WIRE HIGH BIT RATE DIGITAL SUBSCRIBER LINE (HDSL) COMPATIBLE LOOP | | | | | | | | | | | | | | | |
| | 2 Wire Unbundled HDSL Loop including manual service inquiry & facility reservation - Zone 1 | | 1 | UHL | UHL2X | 7.22 | 159.09 | 113.41 | 75.05 | 15.63 | | | | | | |
| | 2 Wire Unbundled HDSL Loop including manual service inquiry & facility reservation - Zone 2 | | 2 | UHL | UHL2X | 10.26 | 159.09 | 113.41 | 75.05 | 15.63 | | | | | | |
| | 2 Wire Unbundled HDSL Loop including manual service inquiry & facility reservation - Zone 3 | | 3 | UHL | UHL2X | 18.21 | 159.09 | 113.41 | 75.05 | 15.63 | | | | | | |
| | Order Coordination for Specified Conversion Time (per LSR) | | | UHL | OCOSL | | 23.02 | | | | | | | | | |
| | 2 Wire Unbundled HDSL Loop without manual service inquiry and facility reservation - Zone 1 | | 1 | UHL | UHL2W | 7.22 | 134.40 | 80.69 | 60.64 | 9.12 | | | | | | |
| | 2 Wire Unbundled HDSL Loop without manual service inquiry and facility reservation - Zone 2 | | 2 | UHL | UHL2W | 10.26 | 134.40 | 80.69 | 60.64 | 9.12 | | | | | | |
| | 2 Wire Unbundled HDSL Loop without manual service inquiry and facility reservation - Zone 3 | | 3 | UHL | UHL2W | 18.21 | 134.40 | 80.69 | 60.64 | 9.12 | | | | | | |
| | Order Coordination for Specified Conversion Time (per LSR) | | | UHL | OCOSL | | 23.02 | | | | | | | | | |
| | CLEC to CLEC Conversion Charge without outside dispatch | | | UHL | UREWO | | 86.12 | 40.39 | | | | | | | | |
| | 4-WIRE HIGH BIT RATE DIGITAL SUBSCRIBER LINE (HDSL) COMPATIBLE LOOP | | | | | | | | | | | | | | | |
| | 4 Wire Unbundled HDSL Loop including manual service inquiry and facility reservation - Zone 1 | | 1 | UHL | UHL4X | 10.86 | 193.31 | 138.98 | 77.15 | 12.61 | | | | | | |
| | 4-Wire Unbundled HDSL Loop including manual service inquiry and facility reservation - Zone 2 | | 2 | UHL | UHL4X | 15.44 | 193.31 | 138.98 | 77.15 | 12.61 | | | | | | |
| | 4-Wire Unbundled HDSL Loop including manual service inquiry and facility reservation - Zone 3 | | 3 | UHL | UHL4X | 27.39 | 193.31 | 138.98 | 77.15 | 12.61 | | | | | | |
| | Order Coordination for Specified Conversion Time (per LSR) | | | UHL | OCOSL | | 23.02 | | | | | | | | | |
| | 4-Wire Unbundled HDSL Loop without manual service inquiry and facility reservation - Zone 1 | | 1 | UHL | UHL4W | 10.86 | 168.62 | 115.47 | 62.74 | 11.22 | | | | | | |
| | 4-Wire Unbundled HDSL Loop without manual service inquiry and facility reservation - Zone 2 | | 2 | UHL | UHL4W | 15.44 | 168.62 | 115.47 | 62.74 | 11.22 | | | | | | |
| | 4-Wire Unbundled HDSL Loop without manual service inquiry and facility reservation - Zone 3 | | 3 | UHL | UHL4W | 27.39 | 168.62 | 115.47 | 62.74 | 11.22 | | | | | | |
| | Order Coordination for Specified Conversion Time (per LSR) | | | UHL | OCOSL | | 23.02 | | | | | | | | | |
| | CLEC to CLEC Conversion Charge without outside dispatch | | | UHL | UREWO | | 86.12 | 40.39 | | | | | | | | |
| | 4-WIRE DS1 DIGITAL LOOP | | | | | | | | | | | | | | | |
| | 4-Wire DS1 Digital Loop - Zone 1 | | 1 | USL | USLXX | 70.74 | 313.75 | 181.48 | 61.22 | 13.53 | | | | | | |
| | 4-Wire DS1 Digital Loop - Zone 2 | | 2 | USL | USLXX | 100.54 | 313.75 | 181.48 | 61.22 | 13.53 | | | | | | |
| | 4-Wire DS1 Digital Loop - Zone 3 | | 3 | USL | USLXX | 178.39 | 313.75 | 181.48 | 61.22 | 13.53 | | | | | | |
| | Order Coordination for Specified Conversion Time (per LSR) | | | USL | OCOSL | | 23.02 | | | | | | | | | |

| UNBUNDLED NETWORK ELEMENTS - Florida | | | | | | | | | | | | | | Attachment: 2 | | Exhibit: A | |
|---|---|---|---|---|---|---|---|---|---|---|---|---|---|---|---|---|---|
| CATEGORY | RATE ELEMENTS | Interim | Zone | BCS | USOC | RATES ($) | | | | | Svc Order Submitted Elec per LSR | Svc Order Submitted Manually per LSR | Incremental Charge - Manual Svc Order vs. Electronic-1st | Incremental Charge - Manual Svc Order vs. Electronic-Add'l | Incremental Charge - Manual Svc Order vs. Electronic-Disc 1st | Incremental Charge - Manual Svc Order vs. Electronic-Disc Add'l |
| | | | | | | Rec | Nonrecurring | | Nonrecurring Disconnect | | OSS Rates ($) | | | | | |
| | | | | | | | First | Add'l | First | Add'l | SOMEC | SOMAN | SOMAN | SOMAN | SOMAN | SOMAN |
| | CLEC to CLEC Conversion Charge without outside dispatch | | | USL | UREWO | | 101.07 | 43.04 | | | | | | | | |
| | **4-WIRE 19.2, 56 OR 64 KBPS DIGITAL GRADE LOOP** | | | | | | | | | | | | | | | |
| | 4 Wire Unbundled Digital 19.2 Kbps | | 1 | UDL | UDL19 | 22.20 | 161.56 | 108.85 | 67.08 | 15.56 | | | | | | |
| | 4 Wire Unbundled Digital 19.2 Kbps | | 2 | UDL | UDL19 | 31.56 | 161.56 | 108.85 | 67.08 | 15.56 | | | | | | |
| | 4 Wire Unbundled Digital 19.2 Kbps | | 3 | UDL | UDL19 | 55.99 | 161.56 | 108.85 | 67.08 | 15.56 | | | | | | |
| | 4 Wire Unbundled Digital Loop 56 Kbps - Zone 1 | | 1 | UDL | UDL56 | 22.20 | 161.56 | 108.85 | 67.08 | 15.56 | | | | | | |
| | 4 Wire Unbundled Digital Loop 56 Kbps - Zone 2 | | 2 | UDL | UDL56 | 31.56 | 161.56 | 108.85 | 67.08 | 15.56 | | | | | | |
| | 4 Wire Unbundled Digital Loop 56 Kbps - Zone 3 | | 3 | UDL | UDL56 | 55.99 | 161.56 | 108.85 | 67.08 | 15.56 | | | | | | |
| | Order Coordination for Specified Conversion Time (per LSR) | | | UDL | OCOSL | | 23.02 | | | | | | | | | |
| | 4 Wire Unbundled Digital Loop 64 Kbps - Zone 1 | | 1 | UDL | UDL64 | 22.20 | 161.56 | 108.85 | 67.08 | 15.56 | | | | | | |
| | 4 Wire Unbundled Digital Loop 64 Kbps - Zone 2 | | 2 | UDL | UDL64 | 31.56 | 161.56 | 108.85 | 67.08 | 15.56 | | | | | | |
| | 4 Wire Unbundled Digital Loop 64 Kbps - Zone 3 | | 3 | UDL | UDL64 | 55.99 | 161.56 | 108.85 | 67.08 | 15.56 | | | | | | |
| | Order Coordination for Specified Conversion Time (per LSR) | | | UDL | OCOSL | | 23.02 | | | | | | | | | |
| | CLEC to CLEC Conversion Charge without outside dispatch | | | UDL | UREWO | | 102.11 | 49.74 | | | | | | | | |
| | **2-WIRE Unbundled COPPER LOOP** | | | | | | | | | | | | | | | |
| | 2-Wire Unbundled Copper Loop-Designed including manual service inquiry & facility reservation - Zone 1 | | 1 | UCL | UCLPB | 8.30 | 148.50 | 102.82 | 75.05 | 15.63 | | | | | | |
| | 2-Wire Unbundled Copper Loop-Designed including manual service inquiry & facility reservation - Zone 2 | | 2 | UCL | UCLPB | 11.80 | 148.50 | 102.82 | 75.05 | 15.63 | | | | | | |
| | 2 Wire Unbundled Copper Loop-Designed including manual service inquiry & facility reservation - Zone 3 | | 3 | UCL | UCLPB | 20.94 | 148.50 | 102.82 | 75.05 | 15.63 | | | | | | |
| | Order Coordination for Unbundled Copper Loops (per loop) | | | UCL | UCLMC | | 9.00 | 9.00 | | | | | | | | |
| | 2-Wire Unbundled Copper Loop-Designed without manual service inquiry and facility reservation - Zone 1 | | 1 | UCL | UCLPW | 8.30 | 123.81 | 70.09 | 60.64 | 9.12 | | | | | | |
| | 2-Wire Unbundled Copper Loop-Designed without manual service inquiry and facility reservation - Zone 2 | | 2 | UCL | UCLPW | 11.80 | 123.81 | 70.09 | 60.64 | 9.12 | | | | | | |
| | 2-Wire Unbundled Copper Loop-Designed without manual service inquiry and facility reservation - Zone 3 | | 3 | UCL | UCLPW | 20.94 | 123.81 | 70.09 | 60.64 | 9.12 | | | | | | |
| | Order Coordination for Unbundled Copper Loops (per loop) | | | UCL | UCLMC | | 9.00 | 9.00 | | | | | | | | |
| | CLEC to CLEC Conversion Charge without outside dispatch (UCL -Des) | | | UCL | UREWO | | 97.21 | 42.47 | | | | | | | | |
| | **4-WIRE COPPER LOOP** | | | | | | | | | | | | | | | |
| | 4-Wire Copper Loop-Designed including manual service inquiry and facility reservation - Zone 1 | | 1 | UCL | UCL4S | 11.83 | 177.87 | 132.76 | 77.15 | 17.73 | | | | | | |
| | 4-Wire Copper Loop-Designed including manual service inquiry and facility reservation - Zone 2 | | 2 | UCL | UCL4S | 16.81 | 177.87 | 132.76 | 77.15 | 17.73 | | | | | | |
| | 4-Wire Copper Loop-Designed including manual service inquiry and facility reservation - Zone 3 | | 3 | UCL | UCL4S | 29.82 | 177.87 | 132.76 | 77.15 | 17.73 | | | | | | |
| | Order Coordination for Unbundled Copper Loops (per loop) | | | UCL | UCLMC | | 9.00 | 9.00 | | | | | | | | |
| | 4-Wire Copper Loop-Designed without manual service inquiry and facility reservation - Zone 1 | | 1 | UCL | UCL4W | 11.83 | 153.18 | 100.03 | 62.74 | 11.22 | | | | | | |
| | 4-Wire Copper Loop-Designed without manual service inquiry and facility reservation - Zone 2 | | 2 | UCL | UCL4W | 16.81 | 153.18 | 100.03 | 62.74 | 11.22 | | | | | | |
| | 4-Wire Copper Loop-Designed without manual service inquiry and facility reservation - Zone 3 | | 3 | UCL | UCL4W | 29.82 | 153.18 | 100.03 | 62.74 | 11.22 | | | | | | |
| | Order Coordination for Unbundled Copper Loops (per loop) | | | UCL | UCLMC | | 9.00 | 9.00 | | | | | | | | |
| | CLEC to CLEC Conversion Charge without outside dispatch | | | UCL | UREWO | | 97.21 | 42.47 | | | | | | | | |
| **LOOP MODIFICATION** | | | | | | | | | | | | | | | | |
| | Unbundled Loop Modification, Removal of Load Coils - 2 Wire pair less than or equal to 18k ft, per Unbundled Loop | | | UAL, UHL, UCL, UEQ, ULS, UEA, UEANL, UEPSR, UEPSB | ULM2L | | 0.00 | 0.00 | | | | | | | | |
| | Unbundled Loop Modification Removal of Load Coils - 4 Wire less than or equal to 18K ft, per Unbundled Loop | | | UHL, UCL, UEA | ULM4L | | 0.00 | 0.00 | | | | | | | | |
| | Unbundled Loop Modification Removal of Bridged Tap Removal, per unbundled loop | | | UAL, UHL, UCL, UEQ, ULS, UEA, UEANL, UEPSR, UEPSB | ULMBT | | 10.52 | 10.52 | | | | | | | | |
| **SUB-LOOPS** | | | | | | | | | | | | | | | | |

CCCS 169 of 1253

## UNBUNDLED NETWORK ELEMENTS - Florida

| CATEGORY | RATE ELEMENTS | Interim | Zone | BCS | USOC | RATES ($) | | | | | Svc Order Submitted Elec per LSR | Svc Order Submitted Manually per LSR | Attachment: 2 Incremental Charge - Manual Svc Order vs. Electronic- 1st | Attachment: 2 Incremental Charge - Manual Svc Order vs. Electronic- Add'l | Exhibit: A Incremental Charge - Manual Svc Order vs. Electronic- Disc 1st | Exhibit: A Incremental Charge - Manual Svc Order vs. Electronic- Disc Add'l |
|---|---|---|---|---|---|---|---|---|---|---|---|---|---|---|---|---|
| | | | | | | Rec | Nonrecurring | | Nonrecurring Disconnect | | OSS Rates ($) | | | | | |
| | | | | | | | First | Add'l | First | Add'l | SOMEC | SOMAN | SOMAN | SOMAN | SOMAN | SOMAN |
| **Sub-Loop Distribution** | | | | | | | | | | | | | | | | |
| | Sub-Loop - Per Cross Box Location - CLEC Feeder Facility Set-Up | I | | UEANL | USBSA | | 487.23 | | | | | | | | | |
| | Sub-Loop - Per Cross Box Location - Per 25 Pair Panel Set-Up | I | | UEANL | USBSB | | 6.25 | | | | | | | | | |
| | Sub-Loop - Per Building Equipment Room - CLEC Feeder Facility Set-Up | I | | UEANL | USBSC | | 169.25 | | | | | | | | | |
| | Sub-Loop - Per Building Equipment Room - Per 25 Pair Panel Set-Up | I | | UEANL | USBSD | | 38.65 | | | | | | | | | |
| | Sub-Loop Distribution Per 2-Wire Analog Voice Grade Loop - Zone 1 | | 1 | UEANL | USBN2 | 6.46 | 60.19 | 21.78 | 47.50 | 5.26 | | | | | | |
| | Sub-Loop Distribution Per 2-Wire Analog Voice Grade Loop - Zone 2 | | 2 | UEANL | USBN2 | 9.18 | 60.19 | 21.78 | 47.50 | 5.26 | | | | | | |
| | Sub-Loop Distribution Per 2-Wire Analog Voice Grade Loop - Zone 3 | | 3 | UEANL | USBN2 | 16.29 | 60.19 | 21.78 | 47.50 | 5.26 | | | | | | |
| | Order Coordination for Unbundled Sub-Loops, per sub-loop pair | | | UEANL | USBMC | | 9.00 | 9.00 | | | | | | | | |
| | Sub-Loop Distribution Per 4-Wire Analog Voice Grade Loop - Zone 1 | | 1 | UEANL | USBN4 | 7.37 | 68.83 | 30.42 | 49.71 | 6.60 | | | | | | |
| | Sub-Loop Distribution Per 4-Wire Analog Voice Grade Loop - Zone 2 | | 2 | UEANL | USBN4 | 10.47 | 68.83 | 30.42 | 49.71 | 6.60 | | | | | | |
| | Sub-Loop Distribution Per 4-Wire Analog Voice Grade Loop - Zone 3 | | 3 | UEANL | USBN4 | 18.58 | 68.83 | 30.42 | 49.71 | 6.60 | | | | | | |
| | Order Coordination for Unbundled Sub-Loops, per sub-loop pair | | | UEANL | USBMC | | 9.00 | 9.00 | | | | | | | | |
| | Sub-Loop 2-Wire Intrabuilding Network Cable (INC) | I | | UEANL | USBR2 | 3.96 | 51.84 | 13.44 | 47.50 | 5.26 | | | | | | |
| | Order Coordination for Unbundled Sub-Loops, per sub-loop pair | | | UEANL | USBMC | | 9.00 | 9.00 | | | | | | | | |
| | Sub-Loop 4-Wire Intrabuilding Network Cable (INC) | I | | UEANL | USBR4 | 9.37 | 55.91 | 17.51 | 49.71 | 6.60 | | | | | | |
| | Order Coordination for Unbundled Sub-Loops, per sub-loop pair | | | UEANL | USBMC | | 9.00 | 9.00 | | | | | | | | |
| | Loop Testing - Basic 1st Half Hour | | | UEANL | URET1 | | 48.65 | 48.65 | | | | | | | | |
| | Loop Testing - Basic Additional Half Hour | | | UEANL | URETA | | 23.95 | 23.95 | | | | | | | | |
| | 2 Wire Copper Unbundled Sub-Loop Distribution - Zone 1 | I | 1 | UEF | UCS2X | 5.15 | 60.19 | 21.78 | 47.50 | 5.26 | | | | | | |
| | 2 Wire Copper Unbundled Sub-Loop Distribution - Zone 2 | I | 2 | UEF | UCS2X | 7.31 | 60.19 | 21.78 | 47.50 | 5.26 | | | | | | |
| | 2 Wire Copper Unbundled Sub-Loop Distribution - Zone 3 | I | 3 | UEF | UCS2X | 12.98 | 60.19 | 21.78 | 47.50 | 5.26 | | | | | | |
| | Order Coordination for Unbundled Sub-Loops, per sub-loop pair | | | UEF | USBMC | | 9.00 | 9.00 | | | | | | | | |
| | 4 Wire Copper Unbundled Sub-Loop Distribution - Zone 1 | I | 1 | UEF | UCS4X | 5.36 | 68.83 | 30.42 | 49.71 | 6.60 | | | | | | |
| | 4 Wire Copper Unbundled Sub-Loop Distribution - Zone 2 | I | 2 | UEF | UCS4X | 7.61 | 68.83 | 30.42 | 49.71 | 6.60 | | | | | | |
| | 4 Wire Copper Unbundled Sub-Loop Distribution - Zone 3 | I | 3 | UEF | UCS4X | 13.51 | 68.83 | 30.42 | 49.71 | 6.60 | | | | | | |
| | Order Coordination for Unbundled Sub-Loops, per sub-loop pair | | | UEF | USBMC | | 9.00 | 9.00 | | | | | | | | |
| | Loop Testing - Basic 1st Half Hour | | | UEF | URET1 | | 48.65 | 48.65 | | | | | | | | |
| | Loop Testing - Basic Additional Half Hour | | | UEF | URETA | | 23.95 | 23.95 | | | | | | | | |
| **Unbundled Network Terminating Wire (UNTW)** | | | | | | | | | | | | | | | | |
| | Unbundled Network Terminating Wire (UNTW) per Pair | | | UENTW | UENPP | 0.4572 | 18.02 | | | | | | | | | |
| **Network Interface Device (NID)** | | | | | | | | | | | | | | | | |
| | Network Interface Device (NID) - 1-2 lines | | | UENTW | UND12 | | 71.49 | 48.87 | | | | | | | | |
| | Network Interface Device (NID) - 1-6 lines | | | UENTW | UND16 | | 113.89 | 89.07 | | | | | | | | |
| | Network Interface Device Cross Connect - 2 W | | | UENTW | UNDC2 | | 7.63 | 7.63 | | | | | | | | |
| | Network Interface Device Cross Connect - 4W | | | UENTW | UNDC4 | | 7.63 | 7.63 | | | | | | | | |
| **UNE OTHER, PROVISIONING ONLY - NO RATE** | | | | | | | | | | | | | | | | |
| | NID - Dispatch and Service Order for NID installation | | | UENTW | UNDBX | 0.00 | 0.00 | | | | | | | | | |
| | UNTW Circuit Id Establishment, Provisioning Only - No Rate | | | UENTW | UENCE | 0.00 | 0.00 | | | | | | | | | |
| | Unbundled Contract Name, Provisioning Only - No Rate | | | UEANL,UEF,UEQ,UENTW | UNECN | 0.00 | 0.00 | | | | | | | | | |
| **UNE OTHER, PROVISIONING ONLY - NO RATE** | | | | | | | | | | | | | | | | |

| UNBUNDLED NETWORK ELEMENTS - Florida | | | | | | | | | | | | | | Attachment: 2 | | Exhibit: A | |
|---|---|---|---|---|---|---|---|---|---|---|---|---|---|---|---|---|---|
| CATEGORY | | RATE ELEMENTS | Interim | Zone | BCS | USOC | RATES ($) | | | | | Svc Order Submitted Elec per LSR | Svc Order Submitted Manually per LSR | Incremental Charge - Manual Svc Order vs. Electronic-1st | Incremental Charge - Manual Svc Order vs. Electronic-Add'l | Incremental Charge - Manual Svc Order vs. Electronic-Disc 1st | Incremental Charge - Manual Svc Order vs. Electronic-Disc Add'l |
| | | | | | | | Rec | Nonrecurring | | Nonrecurring Disconnect | | OSS Rates ($) | | | | | |
| | | | | | | | | First | Add'l | First | Add'l | SOMEC | SOMAN | SOMAN | SOMAN | SOMAN | SOMAN |
| | | Unbundled Contact Name, Provisioning Only - no rate | | | UAL,UCL,UDC,UDL, UDN,UEA,UHL,ULC | UNECN | 0.00 | 0.00 | | | | | | | | | |
| | | Unbundled Sub-Loop Feeder-2 Wire Cross Box Jumper - no rate | | | UEA,UDN,UCL,UDC | USBFQ | 0.00 | 0.00 | | | | | | | | | |
| | | Unbundled Sub-Loop Feeder-4 Wire Cross Box Jumper - no rate | | | UEA,USL,UCL,UDL | USBFR | 0.00 | 0.00 | | | | | | | | | |
| | | Unbundled DS1 Loop - Superframe Format Option - no rate | | | USL | CCOSF | 0.00 | 0.00 | | | | | | | | | |
| | | Unbundled DS1 Loop - Expanded Superframe Format option - no rate | | | USL | CCOEF | 0.00 | 0.00 | | | | | | | | | |
| HIGH CAPACITY UNBUNDLED LOCAL LOOP | | | | | | | | | | | | | | | | | |
| | | High Capacity Unbundled Local Loop - DS3 - Per Mile per month | | | UE3 | 1L5ND | 10.92 | | | | | | | | | | |
| | | High Capacity Unbundled Local Loop - DS3 - Facility Termination per month | | | UE3 | UE3PX | 386.88 | 556.37 | 343.01 | 139.13 | 96.84 | | | | | | |
| | | High Capacity Unbundled Local Loop - STS-1 - Per Mile per month | | | UDLSX | 1L5ND | 10.92 | | | | | | | | | | |
| | | High Capacity Unbundled Local Loop - STS-1 - Facility Termination per month | | | UDLSX | UDLS1 | 426.60 | 556.37 | 343.01 | 139.13 | 96.84 | | | | | | |
| LOOP MAKE-UP | | | | | | | | | | | | | | | | | |
| | | Loop Makeup - Preordering Without Reservation, per working or spare facility queried (Manual). | | | UMK | UMKLW | | 52.17 | 52.17 | | | | | | | | |
| | | Loop Makeup - Preordering With Reservation, per spare facility queried (Manual). | | | UMK | UMKLP | | 55.07 | 55.07 | | | | | | | | |
| | | Loop Makeup--With or Without Reservation, per working or spare facility queried (Mechanized) | | | UMK | UMKMQ | | 0.6784 | 0.6784 | | | | | | | | |
| LINE SHARING AND LINE SPLITTING | | | | | | | | | | | | | | | | | |
| | NOTE 1: The Line Sharing monthly recurring rates for all installations completed from October 02, 2003 through midnight October 01, 2004 shall be billed as follows: | | | | | | | | | | | | | | | | |
| | NOTE 1: 10/02/2003 – 10/01/2004: 25% of the rate for an unbundled copper loop non-designed ("UCLND") | | | | | | | | | | | | | | | | |
| | NOTE 1: 10/02/2004 – 10/01/2005: 50% of the rate for UCLND | | | | | | | | | | | | | | | | |
| | NOTE 1: 10/02/2005 – 10/01/2006: 75% of the rate for UCLND | | | | | | | | | | | | | | | | |
| | NOTE 1: Above will apply to USOCS: ULSDT and ULSCT | | | | | | | | | | | | | | | | |
| | **NOTE 2: The Line Sharing monthly recurring rates with USOCs ULSDC and ULSCC applies only to circuits installed and inservice on or before October 1, 2003 | | | | | | | | | | | | | | | | |
| | LINE SHARING | | | | | | | | | | | | | | | | |
| | SPLITTERS-CENTRAL OFFICE BASED | | | | | | | | | | | | | | | | |
| | | Line Sharing Splitter, per System 96 Line Capacity | | | ULS | ULSDA | 119.72 | 379.13 | 0.00 | 347.90 | 0.00 | | | | | | |
| | | Line Sharing Splitter, per System 24 Line Capacity | | | ULS | ULSDB | 29.93 | 379.13 | 0.00 | 347.90 | 0.00 | | | | | | |
| | | Line Sharing Splitter, Per System, 8 Line Capacity | | | ULS | ULSD8 | 8.33 | 379.13 | 0.00 | 347.90 | 0.00 | | | | | | |
| | | Line Sharing-DLEC Owned Splitter in CO-CFA activaton-deactivation (per LSOD) | | | ULS | ULSDG | | 173.66 | 0.00 | 97.42 | 0.00 | | | | | | |
| | END USER ORDERING-CENTRAL OFFICE BASED LINE SHARING | | | | | | | | | | | | | | | | |
| | | Line Sharing - per Line Activation (BST Owned splitter) - OBSOLETE see **NOTE 2 | | | ULS | ULSDC | 0.61 | 29.68 | 21.28 | 19.57 | 9.61 | | | | | | |
| | | Line Share Service, TRO per line activation, BST owned splitter - Central Office Located (25% of UCLND) - please see NOTE 1 (E:10/2/2003) | | | ULS | ULSDT | 1.99 | 29.68 | 21.28 | 19.57 | 9.61 | | | | | | |
| | | Line Share Service, TRO per line activation, BST owned splitter - Central Office Located (50% of UCLND) - please see NOTE 1 (E:10/2/2004) | | | ULS | ULSDT | 3.98 | 29.68 | 21.28 | 19.57 | 9.61 | | | | | | |
| | | Line Share Service, TRO per line activation, BST owned splitter - Central Office Located (75% of UCLND) - please see NOTE 1 (E:10/2/2005) | | | ULS | ULSDT | 5.97 | 29.68 | 21.28 | 19.57 | 9.61 | | | | | | |
| | | Line Sharing - per Subsequent Activity per Line Rearrangement - (BST Owned Splitter) | | | ULS | ULSDS | | 21.68 | 16.44 | | | | | | | | |
| | | Line Sharing - per Subsequent Activity per Line Rearrangement - (DLEC Owned Splitter) | | | ULS | ULSCS | | 21.68 | 16.44 | | | | | | | | |
| | | Line Sharing - per Line Activation (DLEC owned Splitter) - OBSOLETE see **NOTE 2 | | | ULS | ULSCC | 0.61 | 47.44 | 19.31 | 20.67 | 12.74 | | | | | | |

| UNBUNDLED NETWORK ELEMENTS - Florida | | | | | | | | | | | | | | Attachment: 2 | | Exhibit: A | |
|---|---|---|---|---|---|---|---|---|---|---|---|---|---|---|---|---|---|
| CATEGORY | RATE ELEMENTS | Interim | Zone | BCS | USOC | RATES ($) | | | | | Svc Order Submitted Elec per LSR | Svc Order Submitted Manually per LSR | Incremental Charge - Manual Svc Order vs. Electronic- 1st | Incremental Charge - Manual Svc Order vs. Electronic- Add'l | Incremental Charge - Manual Svc Order vs. Electronic- Disc 1st | Incremental Charge - Manual Svc Order vs. Electronic- Disc Add'l |
| | | | | | | Rec | Nonrecurring | | Nonrecurring Disconnect | | OSS Rates ($) | | | | | |
| | | | | | | | First | Add'l | First | Add'l | SOMEC | SOMAN | SOMAN | SOMAN | SOMAN | SOMAN |
| | Line Share Service, TRO per line activation, CLEC owned splitter - Central Office Located (25% of UCLND) - please see NOTE 1 (E:10/2/2003) | | | ULS | ULSCT | 1.99 | 47.44 | 19.31 | 20.67 | 12.74 | | | | | | |
| | Line Share Service, TRO per line activation, CLEC owned splitter - Central Office Located (50% of UCLND) - please see NOTE 1 (E:10/2/2004) | | | ULS | ULSCT | 3.98 | 47.44 | 19.31 | 20.67 | 12.74 | | | | | | |
| | Line Share Service, TRO per line activation, CLEC owned splitter - Central Office Located (75% of UCLND) - please see NOTE 1 (E:10/2/2005) | | | ULS | ULSCT | 5.97 | 47.44 | 19.31 | 20.67 | 12.74 | | | | | | |
| LINE SPLITTING | | | | | | | | | | | | | | | | |
| END USER ORDERING-CENTRAL OFFICE BASED | | | | | | | | | | | | | | | | |
| | Line Splitting - per line activation DLEC owned splitter | | | UEPSR UEPSB | UREOS | 0.61 | | | | | | | | | | |
| | Line Splitting - per line activation BST owned - physical | | | UEPSR UEPSB | UREBP | 0.61 | 29.68 | 21.28 | 19.57 | 9.61 | | | | | | |
| | Line Splitting - per line activation BST owned - virtual | | | UEPSR UEPSB | UREBV | 1.134 | 29.68 | 21.28 | 19.57 | 9.61 | | | | | | |
| MAINTENANCE | | | | | | | | | | | | | | | | |
| | No Trouble Found - per 1/2 hour increments - Basic | | | | | | 80.00 | 55.00 | | | | | | | | |
| | No Trouble Found - per 1/2 hour increments - Overtime | | | | | | 120.00 | 82.50 | | | | | | | | |
| | No Trouble Found - per 1/2 hour increments - Premium | | | | | | 160.00 | 110.00 | | | | | | | | |
| UNBUNDLED DEDICATED TRANSPORT | | | | | | | | | | | | | | | | |
| INTEROFFICE CHANNEL - DEDICATED TRANSPORT | | | | | | | | | | | | | | | | |
| | Interoffice Channel - Dedicated Transport - 2-Wire Voice Grade - Per Mile per month | | | U1TVX | 1L5XX | 0.0091 | | | | | | | | | | |
| | Interoffice Channel - Dedicated Transport- 2- Wire Voice Grade - Facility Termination | | | U1TVX | U1TV2 | 25.32 | 47.35 | 31.78 | 18.31 | 7.03 | | | | | | |
| | Interoffice Channel - Dedicated Transpor t- 2-Wire Voice Grade Rev Bat. - Per Mile per month | | | U1TVX | 1L5XX | 0.0091 | | | | | | | | | | |
| | Interoffice Channel - Dedicated Transport- 2- Wire VG Rev Bat. - Facility Termination | | | U1TVX | U1TR2 | 25.32 | 47.35 | 31.78 | 18.31 | 7.03 | | | | | | |
| | Interoffice Channel - Dedicated Transport - 4-Wire Voice Grade - Per Mile per month | | | U1TVX | 1L5XX | 0.0091 | | | | | | | | | | |
| | Interoffice Channel - Dedicated Transport - 4- Wire Voice Grade - Facility Termination | | | U1TVX | U1TV4 | 22.58 | 47.35 | 31.78 | 18.31 | 7.03 | | | | | | |
| | Interoffice Channel - Dedicated Transport - 56 kbps - per mile per month | | | U1TDX | 1L5XX | 0.0091 | | | | | | | | | | |
| | Interoffice Channel - Dedicated Transport - 56 kbps - Facility Termination | | | U1TDX | U1TD5 | 18.44 | 47.35 | 31.78 | 18.31 | 7.03 | | | | | | |
| | Interoffice Channel - Dedicated Transport - 64 kbps - per mile per month | | | U1TDX | 1L5XX | 0.0091 | | | | | | | | | | |
| | Interoffice Channel - Dedicated Transport - 64 kbps - Facility Termination | | | U1TDX | U1TD6 | 18.44 | 47.35 | 31.78 | 18.31 | 7.03 | | | | | | |
| | Interoffice Channel - Dedicated Channel - DS1 - Per Mile per month | | | U1TD1 | 1L5XX | 0.1856 | | | | | | | | | | |
| | Interoffice Channel - Dedicated Tranport - DS1 - Facility Termination | | | U1TD1 | U1TF1 | 88.44 | 105.54 | 98.47 | 21.47 | 19.05 | | | | | | |
| | Interoffice Channel - Dedicated Transport - DS3 - Per Mile per month | | | U1TD3 | 1L5XX | 3.87 | | | | | | | | | | |
| | Interoffice Channel - Dedicated Transport - DS3 - Facility Termination per month | | | U1TD3 | U1TF3 | 1,071.00 | 335.46 | 219.28 | 72.03 | 70.56 | | | | | | |
| | Interoffice Channel - Dedicated Transport - STS-1 - Per Mile per month | | | U1TS1 | 1L5XX | 3.87 | | | | | | | | | | |
| | Interoffice Channel - Dedicated Transport - STS-1 - Facility Termination | | | U1TS1 | U1TFS | 1,056.00 | 335.46 | 219.28 | 72.03 | 70.56 | | | | | | |
| DARK FIBER | | | | | | | | | | | | | | | | |
| | Dark Fiber, Four Fiber Strands, Per Route Mile or Fraction Thereof per month - Interoffice Channel | | | UDF, UDFCX | 1L5DF | 26.85 | | | | | | | | | | |
| | NRC Dark Fiber - Interoffice Channel | | | UDF, UDFCX | UDF14 | | 751.34 | 193.88 | 356.21 | 230.11 | | | | | | |
| | Dark Fiber, Four Fiber Strands, Per Route Mile or Fraction Thereof per month - Local Loop | | | UDF, UDFCX | 1L5DL | 55.04 | | | | | | | | | | |
| | NRC Dark Fiber - Local Loop | | | UDF, UDFCX | UDFL4 | | 751.34 | 193.88 | 356.21 | 230.11 | | | | | | |

| UNBUNDLED NETWORK ELEMENTS - Florida | | | | | | | | | | | | | | Attachment: 2 | | Exhibit: A | |
|---|---|---|---|---|---|---|---|---|---|---|---|---|---|---|---|---|---|
| CATEGORY | RATE ELEMENTS | Interim | Zone | BCS | USOC | RATES ($) | | | | | Svc Order Submitted Elec per LSR | Svc Order Submitted Manually per LSR | Incremental Charge - Manual Svc Order vs. Electronic-1st | Incremental Charge - Manual Svc Order vs. Electronic-Add'l | Incremental Charge - Manual Svc Order vs. Electronic-Disc 1st | Incremental Charge - Manual Svc Order vs. Electronic-Disc Add'l |
| | | | | | | Rec | Nonrecurring | | Nonrecurring Disconnect | | OSS Rates ($) | | | | | |
| | | | | | | | First | Add'l | First | Add'l | SOMEC | SOMAN | SOMAN | SOMAN | SOMAN | SOMAN |
| 8XX ACCESS TEN DIGIT SCREENING | | | | | | | | | | | | | | | | |
| | 8XX Access Ten Digit Screening, Per Call | | | OHD | | 0.0006252 | | | | | | | | | | |
| | 8XX Access Ten Digit Screening, Reservation Charge Per 8XX Number Reserved | | | OHD | N8R1X | | 4.15 | 0.70 | | | | | | | | |
| | 8XX Access Ten Digit Screening, Per 8XX No. Established W/O POTS Translations | | | OHD | | | 8.78 | 1.18 | 5.77 | 0.70 | | | | | | |
| | 8XX Access Ten Digit Screening, Per 8XX No. Established With POTS Translations | | | OHD | N8FTX | | 8.78 | 1.18 | 5.77 | 0.70 | | | | | | |
| | 8XX Access Ten Digit Screening, Customized Area of Service Per 8XX Number | | | OHD | N8FCX | | 4.15 | 2.07 | | | | | | | | |
| | 8XX Access Ten Digit Screening, Multiple InterLATA CXR Routing Per CXR Requested Per 8XX No. | | | OHD | N8FMX | | 4.85 | 2.78 | | | | | | | | |
| | 8XX Access Ten Digit Screening, Change Charge Per Request | | | OHD | N8FAX | | 4.85 | 0.70 | | | | | | | | |
| | 8XX Access Ten Digit Screening, Call Handling and Destination Features | | | OHD | N8FDX | | 4.15 | 4.15 | | | | | | | | |
| | 8XX Access Ten Digit Screening, w/ 8FL No. Delivery, per query | | | OHD | | 0.0006252 | | | | | | | | | | |
| | 8XX Access Ten Digit Screening, w/ POTS No. Delivery, per query | | | OHD | | 0.0006252 | | | | | | | | | | |
| LINE INFORMATION DATA BASE ACCESS (LIDB) | | | | | | | | | | | | | | | | |
| | LIDB Common Transport Per Query | | | OQT | | 0.0000203 | | | | | | | | | | |
| | LIDB Validation Per Query | | | OQU | | 0.0136959 | | | | | | | | | | |
| | LIDB Originating Point Code Establishment or Change | | | OQT, OQU | NRBPX | | 55.13 | 55.13 | 55.13 | 55.13 | | | | | | |
| SIGNALING (CCS7) | | | | | | | | | | | | | | | | |
| | CCS7 Signaling Termination, Per STP Port | | | UDB | PT8SX | 135.05 | | | | | | | | | | |
| | CCS7 Signaling Usage, Per TCAP Message | | | UDB | | 0.0000607 | | | | | | | | | | |
| | CCS7 Signaling Connection, Per link (A link) | | | UDB | TPP++ | 17.93 | 43.57 | 43.57 | 18.31 | 18.31 | | | | | | |
| | CCS7 Signaling Connection, Per link (B link) (also known as D link) | | | UDB | TPP++ | 17.93 | 43.57 | 43.57 | 18.31 | 18.31 | | | | | | |
| | CCS7 Signaling Usage, Per ISUP Message | | | UDB | | 0.0000152 | | | | | | | | | | |
| | CCS7 Signaling Usage Surrogate, per link per LATA | | | UDB | STU56 | 694.32 | | | | | | | | | | |
| | CCS7 Signaling Point Code, per Originating Point Code Establishment or Change, per STP affected | | | UDB | CCAPO | | 46.03 | 46.03 | 46.03 | 46.03 | | | | | | |
| E911 SERVICE | | | | | | | | | | | | | | | | |
| | Local Channel - Dedicated - 2-wr Voice Grade - Zone 1 | | | | | 21.94 | 265.84 | 46.97 | 37.63 | 4.00 | | | | | | |
| | Local Channel - Dedicated - 2-wr Voice Grade - Zone 2 | | | | | 29.62 | 265.84 | 46.97 | 37.63 | 4.00 | | | | | | |
| | Local Channel - Dedicated - 2-wr Voice Grade - Zone 3 | | | | | 57.22 | 265.84 | 46.97 | 37.63 | 4.00 | | | | | | |
| | Interoffice Transport - Dedicated - 2-wr Voice Grade Per Mile | | | | | 0.0091 | | | | | | | | | | |
| | Interoffice Transport - Dedicated - 2-wr Voice Grade Per Facility Termination | | | | | 25.32 | 47.35 | 31.78 | 18.31 | 7.03 | | | | | | |
| | Local Channel - Dedicated - DS1 - Zone 1 | | | | | 35.28 | 216.65 | 183.54 | 21.47 | 19.05 | | | | | | |
| | Local Channel - Dedicated - DS1 - Zone 2 | | | | | 47.63 | 216.65 | 183.54 | 21.47 | 19.05 | | | | | | |
| | Local Channel - Dedicated - DS1 - Zone 3 | | | | | 92.01 | 216.65 | 183.54 | 21.47 | 19.05 | | | | | | |
| | Interoffice Transport - Dedicated - DS1 Per Mile | | | | | 0.1856 | | | | | | | | | | |
| | Interoffice Transport - Dedicated - DS1 Per Facility Termination | | | | | 88.44 | 105.54 | 98.47 | 21.47 | 19.05 | | | | | | |
| CALLING NAME (CNAM) SERVICE | | | | | | | | | | | | | | | | |
| | CNAM For DB Owners - Service Establishment | | | OQV | | | 25.35 | 25.35 | 19.01 | 19.01 | | | | | | |
| | CNAM For Non DB Owners - Service Establishment | | | OQV | | | 25.35 | 25.35 | 19.01 | 19.01 | | | | | | |
| | CNAM For DB Owners - Service Provisioning With Point Code Establishment | | | OQV | | | 1,592.00 | 1,177.00 | 352.36 | 259.09 | | | | | | |
| | CNAM For Non DB Owners - Service Provisioning With Point Code Establishment | | | OQV | | | 546.51 | 393.82 | 358.06 | 259.09 | | | | | | |
| | CNAM for DB Owners, Per Query | | | OQV | | 0.001024 | | | | | | | | | | |
| | CNAM for Non DB Owners, Per Query | | | OQV | | 0.001024 | | | | | | | | | | |
| SELECTIVE ROUTING | | | | | | | | | | | | | | | | |
| | Selective Routing Per Unique Line Class Code Per Request Per Switch | | | | | | 93.55 | 93.55 | 12.71 | 12.71 | | | | | | |
| VIRTUAL COLLOCATION | | | | | | | | | | | | | | | | |

| UNBUNDLED NETWORK ELEMENTS - Florida | | | | | | | | | | | | | | Attachment: 2 | | Exhibit: A | |
|---|---|---|---|---|---|---|---|---|---|---|---|---|---|---|---|---|---|
| CATEGORY | | RATE ELEMENTS | Interl m | Zone | BCS | USOC | RATES ($) | | | | | Svc Order Submitted Elec per LSR | Svc Order Submitted Manually per LSR | Incremental Charge - Manual Svc Order vs. Electronic-1st | Incremental Charge - Manual Svc Order vs. Electronic-Add'l | Incremental Charge - Manual Svc Order vs. Electronic-Disc 1st | Incremental Charge - Manual Svc Order vs. Electronic-Disc Add'l |
| | | | | | | | Rec | Nonrecurring | | Nonrecurring Disconnect | | OSS Rates ($) | | | | | |
| | | | | | | | | First | Add'l | First | Add'l | SOMEC | SOMAN | SOMAN | SOMAN | SOMAN | SOMAN |
| | | Virtual Collocation-2 Wire Cross Connects (Loop) for Line Splitting | | | UEPSR UEPSB | VE1LS | 0.0502 | 11.57 | 11.57 | 0.00 | 0.00 | | | | | | |
| PHYSICAL COLLOCATION | | | | | | | | | | | | | | | | | |
| | | Physical Collocation-2 Wire Cross Connects (Loop) for Line Splitting | | | UEPSR UEPSB | PE1LS | 0.0276 | 8.22 | 7.22 | 5.74 | 4.58 | | | | | | |
| AIN SELECTIVE CARRIER ROUTING | | | | | | | | | | | | | | | | | |
| | | Regional Service Establishment | | | SRC | SRCEC | | 193,444.00 | | 7,737.00 | | | | | | | |
| | | End Office Establishment | | | SRC | SRCEO | | 187.36 | 187.36 | 0.69 | 0.69 | | | | | | |
| | | Query NRC, per query | | | SRC | | 0.0031868 | | | | | | | | | | |
| AIN - BELLSOUTH AIN SMS ACCESS SERVICE | | | | | | | | | | | | | | | | | |
| | | AIN SMS Access Service - Service Establishment, Per State, Initial Setup | | | A1N | CAMSE | | 43.56 | 43.56 | 44.93 | 44.93 | | | | | | |
| | | AIN SMS Access Service - Port Connection - Dial/Shared Access | | | A1N | CAMDP | | 8.64 | 8.64 | 10.03 | 10.03 | | | | | | |
| | | AIN SMS Access Service - Port Connection - ISDN Access | | | A1N | CAM1P | | 8.64 | 8.64 | 10.03 | 10.03 | | | | | | |
| | | AIN SMS Access Service - User Identification Codes - Per User ID Code | | | A1N | CAMAU | | 38.66 | 38.66 | 29.88 | 29.88 | | | | | | |
| | | AIN SMS Access Service - Security Card, Per User ID Code, Initial or Replacement | | | A1N | CAMRC | | 75.10 | 75.10 | 12.93 | 12.93 | | | | | | |
| | | AIN SMS Access Service - Storage, Per Unit (100 Kilobytes) | | | | | 0.0028 | | | | | | | | | | |
| | | AIN SMS Access Service - Session, Per Minute | | | | | 0.7809 | | | | | | | | | | |
| | | AIN SMS Access Service - Company Performed Session, Per Minute | | | | | 0.4609 | | | | | | | | | | |
| AIN - BELLSOUTH AIN TOOLKIT SERVICE | | | | | | | | | | | | | | | | | |
| | | AIN Toolkit Service - Service Establishment Charge, Per State, Initial Setup | | | CAM | BAPSC | | 43.56 | 43.56 | 44.93 | 44.93 | | | | | | |
| | | AIN Toolkit Service - Training Session, Per Customer | | | | BAPVX | | 8,439.00 | 8,439.00 | | | | | | | | |
| | | AIN Toolkit Service - Trigger Access Charge, Per Trigger, Per DN, Term. Attempt | | | | BAPTT | | 8.64 | 8.64 | 10.03 | 10.03 | | | | | | |
| | | AIN Toolkit Service - Trigger Access Charge, Per Trigger, Per DN, Off-Hook Delay | | | | BAPTD | | 8.64 | 8.64 | 10.03 | 10.03 | | | | | | |
| | | AIN Toolkit Service - Trigger Access Charge, Per Trigger, Per DN, Off-Hook Immediate | | | | BAPTM | | 8.64 | 8.64 | 10.03 | 10.03 | | | | | | |
| | | AIN Toolkit Service - Trigger Access Charge, Per Trigger, Per DN, 10-Digit PODP | | | | BAPTO | | 38.06 | 38.06 | 15.86 | 15.86 | | | | | | |
| | | AIN Toolkit Service - Trigger Access Charge, Per Trigger, Per DN, CDP | | | | BAPTC | | 38.06 | 38.06 | 15.86 | 15.86 | | | | | | |
| | | AIN Toolkit Service - Trigger Access Charge, Per Trigger, Per DN, Feature Code | | | | BAPTF | | 38.06 | 38.06 | 15.86 | 15.86 | | | | | | |
| | | AIN Toolkit Service - Query Charge, Per Query | | | | | 0.0535927 | | | | | | | | | | |
| | | AIN Toolkit Service - Type 1 Node Charge, Per AIN Toolkit Subscription, Per Node, Per Query | | | | | 0.0063698 | | | | | | | | | | |
| | | AIN Toolkit Service - SCP Storage Charge, Per SMS Access Account, Per 100 Kilobytes | | | | | 0.06 | | | | | | | | | | |
| | | AIN Toolkit Service - Monthly report - Per AIN Toolkit Service Subscription | | | CAM | BAPMS | 8.34 | 8.64 | 8.64 | 6.08 | 6.08 | | | | | | |
| | | AIN Toolkit Service - Special Study - Per AIN Toolkit Service Subscription | | | CAM | BAPLS | 3.73 | 9.56 | 9.56 | | | | | | | | |
| | | AIN Toolkit Service - Call Event Report - Per AIN Toolkit Service Subscription | | | CAM | BAPDS | 4.73 | 8.64 | 8.64 | 6.08 | 6.08 | | | | | | |
| | | AIN Toolkit Service - Call Event Special Study - Per AIN Toolkit Service Subscription | | | CAM | BAPES | 0.12 | 9.56 | 9.56 | | | | | | | | |
| ENHANCED EXTENDED LINK (EELs) | | | | | | | | | | | | | | | | | |
| | | NOTE: The monthly recurring and non-recurring charges below will apply and the Switch-As-Is Charge will not apply for UNE combinations provisioned as ' Ordinarily Combined' Network Elements. | | | | | | | | | | | | | | | |
| | | NOTE: The monthly recurring and the Switch-As-Is Charge and not the non-recurring charges below will apply for UNE combinations provisioned as ' Currently Combined' Network Elements. | | | | | | | | | | | | | | | |
| | | EXTENTED 2-WIRE VOICE GRADE EXTENDED LOOP WITH DEDICATED DS1 INTEROFFICE TRANSPORT | | | | | | | | | | | | | | | |
| | | First 2-Wire VG Loop (SL2) in Combination - Zone 1 | | 1 | UNCVX | UEAL2 | 12.24 | 127.59 | 60.54 | 42.79 | 2.81 | | | | | | |
| | | First 2-Wire VG Loop (SL2) in Combination - Zone 2 | | 2 | UNCVX | UEAL2 | 17.40 | 127.59 | 60.54 | 42.79 | 2.81 | | | | | | |
| | | First 2-Wire VG Loop (SL2) in Combination - Zone 3 | | 3 | UNCVX | UEAL2 | 30.87 | 127.59 | 60.54 | 42.79 | 2.81 | | | | | | |

## UNBUNDLED NETWORK ELEMENTS - Florida

| CATEGORY | RATE ELEMENTS | Interim | Zone | BCS | USOC | RATES ($) | | | | | Svc Order Submitted Elec per LSR | Svc Order Submitted Manually per LSR | Attachment: 2 Incremental Charge - Manual Svc Order vs. Electronic-1st | Attachment: 2 Incremental Charge - Manual Svc Order vs. Electronic-Add'l | Exhibit: A Incremental Charge - Manual Svc Order vs. Electronic-Disc 1st | Exhibit: A Incremental Charge - Manual Svc Order vs. Electronic-Disc Add'l |
|---|---|---|---|---|---|---|---|---|---|---|---|---|---|---|---|---|
| | | | | | | Rec | Nonrecurring | | Nonrecurring Disconnect | | OSS Rates ($) | | | | | |
| | | | | | | | First | Add'l | First | Add'l | SOMEC | SOMAN | SOMAN | SOMAN | SOMAN | SOMAN |
| | Interoffice Transport - Dedicated - DS1 combination - Per Mile per month | | | UNC1X | 1L5XX | 0.1856 | | | | | | | | | | |
| | Interoffice Transport - Dedicated - DS1 combination - Facility Termination per month | | | UNC1X | U1TF1 | 88.44 | 174.46 | 122.46 | 45.61 | 17.95 | | | | | | |
| | 1/0 Channelization System in combination Per Month | | | UNC1X | MQ1 | 146.77 | 101.42 | 71.62 | | | | | | | | |
| | Voice Grade COCI - Per Month | | | UNCVX | 1D1VG | 1.38 | 10.07 | 7.08 | 0.00 | 0.00 | | | | | | |
| | Each Additional 2-Wire VG Loop (SL 2) in Combination - Zone 1 | | 1 | UNCVX | UEAL2 | 12.24 | 127.59 | 60.54 | 42.79 | 2.81 | | | | | | |
| | Each Additional 2-Wire VG Loop (SL 2) in Combination - Zone 2 | | 2 | UNCVX | UEAL2 | 17.40 | 127.59 | 60.54 | 42.79 | 2.81 | | | | | | |
| | Each Additional 2-Wire VG Loop (SL 2) in Combination - Zone 3 | | 3 | UNCVX | UEAL2 | 30.87 | 127.59 | 60.54 | 42.79 | 2.81 | | | | | | |
| | Voice Grade COCI - Per Month | | | UNCVX | 1D1VG | 1.38 | 10.07 | 7.08 | 0.00 | 0.00 | | | | | | |
| | Nonrecurring Currently Combined Network Elements Switch -As-Is Charge | | | UNC1X | UNCCC | | 8.98 | 8.98 | 8.98 | 8.98 | | | | | | |
| | **EXTENDED 4-WIRE VOICE GRADE EXTENDED LOOP WITH DEDICATED DS1 INTEROFFICE TRANSPORT** | | | | | | | | | | | | | | | |
| | First 4-Wire Analog Voice Grade Loop in Combination - Zone 1 | | 1 | UNCVX | UEAL4 | 18.89 | 127.59 | 60.54 | 42.79 | 2.81 | | | | | | |
| | First 4-Wire Analog Voice Grade Loop in Combination - Zone 2 | | 2 | UNCVX | UEAL4 | 26.84 | 127.59 | 60.54 | 42.79 | 2.81 | | | | | | |
| | First 4-Wire Analog Voice Grade Loop in Combination - Zone 3 | | 3 | UNCVX | UEAL4 | 47.62 | 127.59 | 60.54 | 42.79 | 2.81 | | | | | | |
| | Interoffice Transport - Dedicated - DS1 combination - Per Mile Per Month | | | UNC1X | 1L5XX | 0.1856 | | | | | | | | | | |
| | Interoffice Transport - Dedicated - DS1 - Facility Termination Per Month | | | UNC1X | U1TF1 | 88.44 | 174.46 | 122.46 | 45.61 | 17.95 | | | | | | |
| | 1/0 Channel System in combination Per Month | | | UNC1X | MQ1 | 146.77 | 101.42 | 71.62 | | | | | | | | |
| | Voice Grade COCI in combination - per month | | | UNCVX | 1D1VG | 1.38 | 10.07 | 7.08 | 0.00 | 0.00 | | | | | | |
| | Additional 4-Wire Analog Voice Grade Loop in same DS1 Interoffice Transport Combination - Zone 1 | | 1 | UNCVX | UEAL4 | 18.89 | 127.59 | 60.54 | 42.79 | 2.81 | | | | | | |
| | Additional 4-Wire Analog Voice Grade Loop in same DS1 Interoffice Transport Combination - Zone 2 | | 2 | UNCVX | UEAL4 | 26.84 | 127.59 | 60.54 | 42.79 | 2.81 | | | | | | |
| | Additional 4-Wire Analog Voice Grade Loop in same DS1 Interoffice Transport Combination - Zone 3 | | 3 | UNCVX | UEAL4 | 47.62 | 127.59 | 60.54 | 42.79 | 2.81 | | | | | | |
| | Additional Voice Grade COCI in combination - per month | | | UNCVX | 1D1VG | 1.38 | 10.07 | 7.08 | 0.00 | 0.00 | | | | | | |
| | Nonrecurring Currently Combined Network Elements Switch -As-Is Charge | | | UNC1X | UNCCC | | 8.98 | 8.98 | 8.98 | 8.98 | | | | | | |
| | **EXTENDED 4-WIRE 56 KBPS EXTENDED DIGITAL LOOP WITH DEDICATED DS1 INTEROFFICE TRANSPORT** | | | | | | | | | | | | | | | |
| | First 4-Wire 56Kbps Digital Grade Loop in Combination - Zone 1 | | 1 | UNCDX | UDL56 | 22.20 | 127.59 | 60.54 | 42.79 | 2.81 | | | | | | |
| | First 4-Wire 56Kbps Digital Grade Loop in Combination - Zone 2 | | 2 | UNCDX | UDL56 | 31.56 | 127.59 | 60.54 | 42.79 | 2.81 | | | | | | |
| | First 4-Wire 56Kbps Digital Grade Loop in Combination - Zone 3 | | 3 | UNCDX | UDL56 | 55.99 | 127.59 | 60.54 | 42.79 | 2.81 | | | | | | |
| | Interoffice Transport - Dedicated - DS1 combination - Per Mile Per Month | | | UNC1X | 1L5XX | 0.1856 | | | | | | | | | | |
| | Interoffice Transport - Dedicated - DS1 - combination Facility Termination Per Month | | | UNC1X | U1TF1 | 88.44 | 174.46 | 122.46 | 45.61 | 17.95 | | | | | | |
| | 1/0 Channel System in combination Per Month | | | UNC1X | MQ1 | 146.77 | 101.42 | 71.62 | | | | | | | | |
| | OCU-DP COCI (data) per month (2.4-64kbs) | | | UNCDX | 1D1DD | 2.10 | 10.07 | 7.08 | 0.00 | 0.00 | | | | | | |
| | Additional 4-Wire 56Kbps Digital Grade Loop in same DS1 Interoffice Transport Combination - Zone 1 | | 1 | UNCDX | UDL56 | 22.20 | 127.59 | 60.54 | 42.79 | 2.81 | | | | | | |
| | Additional 4-Wire 56Kbps Digital Grade Loop in same DS1 Interoffice Transport Combination - Zone 2 | | 2 | UNCDX | UDL56 | 31.56 | 127.59 | 60.54 | 42.79 | 2.81 | | | | | | |
| | Additional 4-Wire 56Kbps Digital Grade Loop in same DS1 Interoffice Transport Combination - Zone 3 | | 3 | UNCDX | UDL56 | 55.99 | 127.59 | 60.54 | 42.79 | 2.81 | | | | | | |
| | Additional OCU-DP COCI (data) - in combination per month (2.4-64kbs) | | | UNCDX | 1D1DD | 2.10 | 10.07 | 7.08 | 0.00 | 0.00 | | | | | | |

## UNBUNDLED NETWORK ELEMENTS - Florida

| CATEGORY | | RATE ELEMENTS | Interim | Zone | BCS | USOC | RATES ($) | | | | | Svc Order Submitted Elec per LSR | Svc Order Submitted Manually per LSR | Attachment: 2 Incremental Charge - Manual Svc Order vs. Electronic-1st | Attachment: 2 Incremental Charge - Manual Svc Order vs. Electronic-Add'l | Exhibit: A Incremental Charge - Manual Svc Order vs. Electronic-Disc 1st | Exhibit: A Incremental Charge - Manual Svc Order vs. Electronic-Disc Add'l |
|---|---|---|---|---|---|---|---|---|---|---|---|---|---|---|---|---|---|
| | | | | | | | Rec | Nonrecurring | | Nonrecurring Disconnect | | OSS Rates ($) | | | | | |
| | | | | | | | | First | Add'l | First | Add'l | SOMEC | SOMAN | SOMAN | SOMAN | SOMAN | SOMAN |
| | | Nonrecurring Currently Combined Network Elements Switch -As-Is Charge | | | UNC1X | UNCCC | | 8.98 | 8.98 | 8.98 | 8.98 | | | | | | |
| | | **EXTENDED 4-WIRE 64 KBPS EXTENDED DIGITAL LOOP WITH DEDICATED DS1 INTEROFFICE TRANSPORT** | | | | | | | | | | | | | | | |
| | | First 4-Wire 64Kbps Digital Grade Loop in Combination - Zone 1 | | 1 | UNCDX | UDL64 | 22.20 | 127.59 | 60.54 | 42.79 | 2.81 | | | | | | |
| | | First 4-Wire 64Kbps Digital Grade Loop in Combination - Zone 2 | | 2 | UNCDX | UDL64 | 31.56 | 127.59 | 60.54 | 42.79 | 2.81 | | | | | | |
| | | First 4-Wire 64Kbps Digital Grade Loop in Combination - Zone 3 | | 3 | UNCDX | UDL64 | 55.99 | 127.59 | 60.54 | 42.79 | 2.81 | | | | | | |
| | | Interoffice Transport - Dedicated - DS1 combination - Per Mile Per Month | | | UNC1X | 1L5XX | 0.1856 | | | | | | | | | | |
| | | Interoffice Transport - Dedicated - DS1 combination - Facility Termination Per Month | | | UNC1X | U1TF1 | 88.44 | 174.46 | 122.46 | 45.61 | 17.95 | | | | | | |
| | | 1/0 Channel System in combination Per Month | | | UNC1X | MQ1 | 146.77 | 101.42 | 71.62 | | | | | | | | |
| | | OCU-DP COCI (data) - in combination - per month (2.4-64kbs) | | | UNCDX | 1D1DD | 2.10 | 10.07 | 7.08 | 0.00 | 0.00 | | | | | | |
| | | Additional 4-Wire 64Kbps Digital Grade Loop in same DS1 Interoffice Transport Combination - Zone 1 | | 1 | UNCDX | UDL64 | 22.20 | 127.59 | 60.54 | 42.79 | 2.81 | | | | | | |
| | | Additional 4-Wire 64Kbps Digital Grade Loop in same DS1 Interoffice Transport Combination - Zone 2 | | 2 | UNCDX | UDL64 | 31.56 | 127.59 | 60.54 | 42.79 | 2.81 | | | | | | |
| | | Additional 4-Wire 64Kbps Digital Grade Loop in same DS1 Interoffice Transport Combination - Zone 3 | | 3 | UNCDX | UDL64 | 55.99 | 127.59 | 60.54 | 42.79 | 2.81 | | | | | | |
| | | Additional OCU-DP COCI (data) - in combination - per month (2.4-64kbs) | | | UNCDX | 1D1DD | 2.10 | 10.07 | 7.08 | 0.00 | 0.00 | | | | | | |
| | | Nonrecurring Currently Combined Network Elements Switch -As-Is Charge | | | UNC1X | UNCCC | | 8.98 | 8.98 | 8.98 | 8.98 | | | | | | |
| | | **EXTENDED 4-WIRE DS1 DIGITAL EXTENDED LOOP WITH DEDICATED DS1 INTEROFFICE TRANSPORT** | | | | | | | | | | | | | | | |
| | | 4-Wire DS1 Digital Loop in Combination - Zone 1 | | 1 | UNC1X | USLXX | 70.74 | 217.75 | 121.62 | 51.44 | 14.45 | | | | | | |
| | | 4-Wire DS1 Digital Loop in Combination - Zone 2 | | 2 | UNC1X | USLXX | 100.54 | 217.75 | 121.62 | 51.44 | 14.45 | | | | | | |
| | | 4-Wire DS1 Digital Loop in Combination - Zone 3 | | 3 | UNC1X | USLXX | 178.39 | 217.75 | 121.62 | 51.44 | 14.45 | | | | | | |
| | | Interoffice Transport - Dedicated - DS1 combination - Per Mile Per Month | | | UNC1X | 1L5XX | 0.1856 | | | | | | | | | | |
| | | Interoffice Transport - Dedicated - DS1 combination - Facility Termination Per Month | | | UNC1X | U1TF1 | 88.44 | 174.46 | 122.46 | 45.61 | 17.95 | | | | | | |
| | | Nonrecurring Currently Combined Network Elements Switch -As-Is Charge | | | UNC1X | UNCCC | | 8.98 | 8.98 | 8.98 | 8.98 | | | | | | |
| | | **EXTENDED 4-WIRE DS1 DIGITAL EXTENDED LOOP WITH DEDICATED DS3 INTEROFFICE TRANSPORT** | | | | | | | | | | | | | | | |
| | | First DS1Loop in Combination - Zone 1 | | 1 | UNC1X | USLXX | 70.74 | 217.75 | 121.62 | 51.44 | 14.45 | | | | | | |
| | | First DS1Loop in Combination - Zone 2 | | 2 | UNC1X | USLXX | 100.54 | 217.75 | 121.62 | 51.44 | 14.45 | | | | | | |
| | | First DS1Loop in Combination - Zone 3 | | 3 | UNC1X | USLXX | 178.39 | 217.75 | 121.62 | 51.44 | 14.45 | | | | | | |
| | | Interoffice Transport - Dedicated - DS3 combination - Per Mile Per Month | | | UNC3X | 1L5XX | 3.87 | | | | | | | | | | |
| | | Interoffice Transport - Dedicated - DS3 - Facility Termination per month | | | UNC3X | U1TF3 | 1,071.00 | 314.45 | 130.88 | 38.60 | 18.23 | | | | | | |
| | | 3/1Channel System in combination per month | | | UNC3X | MQ3 | 211.19 | 199.28 | 118.64 | 40.34 | 39.07 | | | | | | |
| | | DS1 COCI in combination per month | | | UNC1X | UC1D1 | 13.76 | 10.07 | 7.08 | 0.00 | 0.00 | | | | | | |
| | | Additional DS1Loop in DS3 Interoffice Transport Combination - Zone 1 | | 1 | UNC1X | USLXX | 70.74 | 217.75 | 121.62 | 51.44 | 14.45 | | | | | | |
| | | Additional DS1Loop in DS3 Interoffice Transport Combination - Zone 2 | | 2 | UNC1X | USLXX | 100.54 | 217.75 | 121.62 | 51.44 | 14.45 | | | | | | |
| | | Additional DS1Loop in DS3 Interoffice Transport Combination - Zone 3 | | 3 | UNC1X | USLXX | 178.39 | 217.75 | 121.62 | 51.44 | 14.45 | | | | | | |
| | | Additoinal DS1 COCI in combination per month | | | UNC1X | UC1D1 | 13.76 | 10.07 | 7.08 | 0.00 | 0.00 | | | | | | |
| | | Nonrecurring Currently Combined Network Elements Switch -As-Is Charge | | | UNC3X | UNCCC | | 8.98 | 8.98 | 8.98 | 8.98 | | | | | | |
| | | **EXTENDED 2-WIRE VOICE GRADE EXTENDED LOOP/ 2 WIRE VOICE GRADE INTEROFFICE TRANSPORT** | | | | | | | | | | | | | | | |
| | | 2-WireVG Loop in combination - Zone 1 | | 1 | UNCVX | UEAL2 | 12.24 | 127.59 | 60.54 | 42.79 | 2.81 | | | | | | |
| | | 2-WireVG Loop in combination - Zone 2 | | 2 | UNCVX | UEAL2 | 17.40 | 127.59 | 60.54 | 42.79 | 2.81 | | | | | | |
| | | 2-WireVG Loop in combination - Zone 3 | | 3 | UNCVX | UEAL2 | 30.87 | 127.59 | 60.54 | 42.79 | 2.81 | | | | | | |

## UNBUNDLED NETWORK ELEMENTS - Florida

| CATEGORY | RATE ELEMENTS | Interim | Zone | BCS | USOC | RATES ($) | | | | | Svc Order Submitted Elec per LSR | Svc Order Submitted Manually per LSR | Attachment: 2 Incremental Charge - Manual Svc Order vs. Electronic-1st | Attachment: 2 Incremental Charge - Manual Svc Order vs. Electronic-Add'l | Exhibit: A Incremental Charge - Manual Svc Order vs. Electronic-Disc 1st | Exhibit: A Incremental Charge - Manual Svc Order vs. Electronic-Disc Add'l |
|---|---|---|---|---|---|---|---|---|---|---|---|---|---|---|---|---|
| | | | | | | Rec | Nonrecurring | | Nonrecurring Disconnect | | OSS Rates ($) | | | | | |
| | | | | | | | First | Add'l | First | Add'l | SOMEC | SOMAN | SOMAN | SOMAN | SOMAN | SOMAN |
| | Interoffice Transport - 2-wire VG - Dedicated- Per Mile Per Month | | | UNCVX | 1L5XX | 0.0091 | | | | | | | | | | |
| | Interoffice Transport - 2-wire VG - Dedicated - Facility Termination per month | | | UNCVX | U1TV2 | 25.32 | 94.70 | 52.59 | 50.49 | 21.53 | | | | | | |
| | Nonrecurring Currently Combined Network Elements Switch -As-Is Charge | | | UNCVX | UNCCC | | 8.98 | 8.98 | 8.98 | 8.98 | | | | | | |
| | **EXTENDED 4-WIRE VOICE GRADE EXTENDED LOOP/ 4 WIRE VOICE GRADE INTEROFFICE TRANSPORT** | | | | | | | | | | | | | | | |
| | 4-WireVG Loop in combination - Zone 1 | | 1 | UNCVX | UEAL4 | 18.89 | 127.59 | 60.54 | 42.79 | 2.81 | | | | | | |
| | 4-WireVG Loop in combination - Zone 2 | | 2 | UNCVX | UEAL4 | 26.84 | 127.59 | 60.54 | 42.79 | 2.81 | | | | | | |
| | 4-WireVG Loop in combination - Zone 3 | | 3 | UNCVX | UEAL4 | 47.62 | 127.59 | 60.54 | 42.79 | 2.81 | | | | | | |
| | Interoffice Transport - 4-wire VG - Dedicated - Per Mile Per Month | | | UNCVX | 1L5XX | 0.0091 | | | | | | | | | | |
| | Interoffice Transport - 4-wire VG - Dedicated - Facility Termination per month | | | UNCVX | U1TV4 | 22.58 | 94.70 | 52.59 | 50.49 | 21.53 | | | | | | |
| | Nonrecurring Currently Combined Network Elements Switch -As-Is Charge | | | UNCVX | UNCCC | | 8.98 | 8.98 | 8.98 | 8.98 | | | | | | |
| | **EXTENDED DS3 DIGITAL EXTENDED LOOP WITH DEDICATED DS3 INTEROFFICE TRANSPORT** | | | | | | | | | | | | | | | |
| | DS3 Local Loop in combination - per mile per month | | | UNC3X | 1L5ND | 10.92 | | | | | | | | | | |
| | DS3 Local Loop in combination - Facility Termination per month | | | UNC3X | UE3PX | 386.88 | 249.97 | 162.05 | 67.10 | 26.82 | | | | | | |
| | Interoffice Transport - Dedicated - DS3 - Per Mile per month | | | UNC3X | 1L5XX | 3.87 | | | | | | | | | | |
| | Interoffice Transport - Dedicated - DS3 combination - Facility Termination per month | | | UNC3X | U1TF3 | 1,071.00 | 314.45 | 130.88 | 38.60 | 18.23 | | | | | | |
| | Nonrecurring Currently Combined Network Elements Switch -As-Is Charge | | | UNC3X | UNCCC | | 8.98 | 8.98 | 8.98 | 8.98 | | | | | | |
| | **EXTENDED STS-1 DIGITAL EXTENDED LOOP WITH DEDICATED STS-1 INTEROFFICE TRANSPORT** | | | | | | | | | | | | | | | |
| | STS-1 Local Lolp in combination - per mile per month | | | UNCSX | 1L5ND | 10.92 | | | | | | | | | | |
| | STS-1 Local Loop in combination - Facility Termination per month | | | UNCSX | UDLS1 | 426.60 | 249.97 | 162.05 | 67.10 | 26.82 | | | | | | |
| | Interoffice Transport - Dedicated - STS-1 combination - per mile per month | | | UNCSX | 1L5XX | 3.87 | | | | | | | | | | |
| | Interoffice Transport - Dedicated - STS-1 combination - Facility Termination per month | | | UNCSX | U1TFS | 1,056.00 | 314.45 | 130.88 | 38.60 | 18.23 | | | | | | |
| | Nonrecurring Currently Combined Network Elements Switch -As-Is Charge | | | UNCSX | UNCCC | | 8.98 | 8.98 | 8.98 | 8.98 | | | | | | |
| | **EXTENDED 2-WIRE ISDN EXTENDED LOOP WITH DS1 INTEROFFICE TRANSPORT** | | | | | | | | | | | | | | | |
| | First 2-Wire ISDN Loop in Combination - Zone 1 | | 1 | UNCNX | U1L2X | 19.28 | 127.59 | 60.60 | 42.79 | 2.81 | | | | | | |
| | First 2-Wire ISDN Loop in Combination - Zone 2 | | 2 | UNCNX | U1L2X | 27.40 | 127.59 | 60.60 | 42.79 | 2.81 | | | | | | |
| | First 2-Wire ISDN Loop in Combination - Zone 3 | | 3 | UNCNX | U1L2X | 48.62 | 127.59 | 60.60 | 42.79 | 2.81 | | | | | | |
| | Interoffice Transport - Dedicated - DS1 combination - per mile per month | | | UNC1X | 1L5XX | 0.1856 | | | | | | | | | | |
| | Interoffice Transport - Dedicated - DS1 combination - Facility Termination per month | | | UNC1X | U1TF1 | 88.44 | 174.46 | 122.46 | 45.61 | 17.95 | | | | | | |
| | 1/0 Channel System in combination - per month | | | UNC1X | MQ1 | 146.77 | 101.42 | 71.62 | | | | | | | | |
| | 2-wire ISDN COCI (BRITE) - in combination - per month | | | UNCNX | UC1CA | 3.66 | 10.07 | 7.08 | 0.00 | 0.00 | | | | | | |
| | Additional 2-wire ISDN Loop in same DS1Interoffice Transport Combination - Zone 1 | | 1 | UNCNX | U1L2X | 19.28 | 127.59 | 60.60 | 42.79 | 2.81 | | | | | | |
| | Additional 2-wire ISDN Loop in same DS1Interoffice Transport Combination - Zone 2 | | 2 | UNCNX | U1L2X | 27.40 | 127.59 | 60.60 | 42.79 | 2.81 | | | | | | |
| | Additional 2-wire ISDN Loop in same DS1Interoffice Transport Combination - Zone 3 | | 3 | UNCNX | U1L2X | 48.62 | 127.59 | 60.60 | 42.79 | 2.81 | | | | | | |
| | Additional 2-wire ISDN COCI (BRITE) - in combination- per month | | | UNCNX | UC1CA | 3.66 | 10.07 | 7.08 | 0.00 | 0.00 | | | | | | |
| | Nonrecurring Currently Combined Network Elements Switch -As-Is Charge | | | UNC1X | UNCCC | | 8.98 | 8.98 | 8.98 | 8.98 | | | | | | |
| | **EXTENDED 4-WIRE DS1 DIGITAL EXTENDED LOOP WITH DEDICATED STS-1 INTEROFFICE TRANSPORT** | | | | | | | | | | | | | | | |
| | First DS1 Loop Combination - Zone 1 | | 1 | UNC1X | USLXX | 70.74 | 217.75 | 121.62 | 51.44 | 14.45 | | | | | | |
| | First DS1 Loop Combination - Zone 2 | | 2 | UNC1X | USLXX | 100.54 | 217.75 | 121.62 | 51.44 | 14.45 | | | | | | |
| | First DS1 Loop Combination - Zone 3 | | 3 | UNC1X | USLXX | 178.39 | 217.75 | 121.62 | 51.44 | 14.45 | | | | | | |

| UNBUNDLED NETWORK ELEMENTS - Florida | | | | | | | | | | | | | | Attachment: 2 | | Exhibit: A | |
|---|---|---|---|---|---|---|---|---|---|---|---|---|---|---|---|---|---|
| CATEGORY | | RATE ELEMENTS | Interim | Zone | BCS | USOC | RATES ($) | | | | | Svc Order Submitted Elec per LSR | Svc Order Submitted Manually per LSR | Incremental Charge - Manual Svc Order vs. Electronic-1st | Incremental Charge - Manual Svc Order vs. Electronic-Add'l | Incremental Charge - Manual Svc Order vs. Electronic-Disc 1st | Incremental Charge - Manual Svc Order vs. Electronic-Disc Add'l |
| | | | | | | | Rec | Nonrecurring | | Nonrecurring Disconnect | | OSS Rates ($) | | | | | |
| | | | | | | | | First | Add'l | First | Add'l | SOMEC | SOMAN | SOMAN | SOMAN | SOMAN | SOMAN |
| | | Interoffice Transport - Dedicated - STS-1 combination - Per Mile Per Month | | | UNCSX | 1L5XX | 3.87 | | | | | | | | | | |
| | | Interoffice Transport - Dedicated - STS-1 combination - Facility Termination per month | | | UNCSX | U1TFS | 1,056.00 | 314.45 | 130.88 | 38.60 | 18.23 | | | | | | |
| | | 3/1 Channel System in combination per month | | | UNCSX | MQ3 | 211.19 | 199.28 | 118.64 | 40.34 | 39.07 | | | | | | |
| | | DS1 COCI in combination per month | | | UNC1X | UC1D1 | 13.76 | 10.07 | 7.08 | 0.00 | 0.00 | | | | | | |
| | | Additional DS1Loop in the same STS-1 Interoffice Transport Combination - Zone 1 | | 1 | UNC1X | USLXX | 70.74 | 217.75 | 121.62 | 51.44 | 14.45 | | | | | | |
| | | Additional DS1Loop in the same STS-1 Interoffice Transport Combination - Zone 2 | | 2 | UNC1X | USLXX | 100.54 | 217.75 | 121.62 | 51.44 | 14.45 | | | | | | |
| | | Additional DS1Loop in the same STS-1 Interoffice Transport Combination - Zone 3 | | 3 | UNC1X | USLXX | 178.39 | 217.75 | 121.62 | 51.44 | 14.45 | | | | | | |
| | | DS1 COCI in combination per month | | | UNC1X | UC1D1 | 13.76 | 10.07 | 7.08 | 0.00 | 0.00 | | | | | | |
| | | Nonrecurring Currently Combined Network Elements Switch -As-Is Charge | | | UNCSX | UNCCC | | 8.98 | 8.98 | 8.98 | 8.98 | | | | | | |
| | | **EXTENDED 4-WIRE 56 KBPS DIGITAL EXTENDED LOOP WITH 56 KBPS INTEROFFICE TRANSPORT** | | | | | | | | | | | | | | | |
| | | 4-wire 56 kbps Local Loop in combination - Zone 1 | | 1 | UNCDX | UDL56 | 22.20 | 127.59 | 60.54 | 42.79 | 2.81 | | | | | | |
| | | 4-wire 56 kbps Local Loop in combination - Zone 2 | | 2 | UNCDX | UDL56 | 31.56 | 127.59 | 60.54 | 42.79 | 2.81 | | | | | | |
| | | 4-wire 56 kbps Local Loop in combination - Zone 3 | | 3 | UNCDX | UDL56 | 55.99 | 127.59 | 60.54 | 42.79 | 2.81 | | | | | | |
| | | Interoffice Transport - Dedicated - 4-wire 56 kbps combination - Per Mile per month | | | UNCDX | 1L5XX | 0.0091 | | | | | | | | | | |
| | | Interoffice Transport - Dedicated - 4-wire 56 kbps combination - Facility Termination per month | | | UNCDX | U1TD5 | 18.44 | 94.70 | 52.59 | 50.49 | 21.53 | | | | | | |
| | | Nonrecurring Currently Combined Network Elements Switch -As-Is Charge | | | UNCDX | UNCCC | | 8.98 | 8.98 | 8.98 | 8.98 | | | | | | |
| | | **EXTENDED 4-WIRE 64 KBPS DIGITAL EXTENDED LOOP WITH 64 KBPS INTEROFFICE TRANSPORT** | | | | | | | | | | | | | | | |
| | | 4-wire 64 kbps Lcoal Loop in Combination - Zone 1 | | 1 | UNCDX | UDL64 | 22.20 | 127.59 | 60.54 | 42.79 | 2.81 | | | | | | |
| | | 4-wire 64 kbps Lcoal Loop in Combination - Zone 2 | | 2 | UNCDX | UDL64 | 31.56 | 127.59 | 60.54 | 42.79 | 2.81 | | | | | | |
| | | 4-wire 64 kbps Lcoal Loop in Combination - Zone 3 | | 3 | UNCDX | UDL64 | 55.99 | 127.59 | 60.54 | 42.79 | 2.81 | | | | | | |
| | | Interoffice Transport - Dedicated - 4-wire 64 kbps combination - Per Mile per month | | | UNCDX | 1L5XX | 0.0091 | | | | | | | | | | |
| | | Interoffice Transport - Dedicated - 4-wire 64 kbps combination - Facility Termination per month | | | UNCDX | U1TD6 | 18.44 | 94.70 | 52.59 | 50.49 | 21.53 | | | | | | |
| | | Nonrecurring Currently Combined Network Elements Switch -As-Is Charge | | | UNCDX | UNCCC | | 8.98 | 8.98 | 8.98 | 8.98 | | | | | | |
| | | **EXTENDED 2-WIRE VOICE GRADE LOOP WITH DS1 INTEROFFICE TRANSPORT w/ 3/1 MUX** | | | | | | | | | | | | | | | |
| | | First 2-wire VG Loop (SL2) in Combination - Zone 1 | | 1 | UNCVX | UEAL2 | 12.24 | 127.59 | 60.54 | 42.79 | 2.81 | | | | | | |
| | | First 2-wire VG Loop (SL2) in Combination - Zone 2 | | 2 | UNCVX | UEAL2 | 17.40 | 127.59 | 60.54 | 42.79 | 2.81 | | | | | | |
| | | First 2-wire VG Loop (SL2) in Combination - Zone 3 | | 3 | UNCVX | UEAL2 | 30.87 | 127.59 | 60.54 | 42.79 | 2.81 | | | | | | |
| | | First Interoffice Transport - Dedicated - DS1 combination - Per Mile | | | UNC1X | 1L5XX | 0.1856 | | | | | | | | | | |
| | | First Interoffice Transport - Dedicated - DS1 combination - Facility Termination per month | | | UNC1X | U1TF1 | 88.44 | 174.46 | 122.46 | 45.61 | 17.95 | | | | | | |
| | | Per each DS1 Channelization System Per Month | | | UNC1X | MQ1 | 146.77 | 101.42 | 71.62 | | | | | | | | |
| | | Per each Voice Grade COCI - Per Month per month | | | UNCVX | 1D1VG | 1.38 | 10.07 | 7.08 | 0.00 | 0.00 | | | | | | |
| | | 3/1 Channel System in combination per month | | | UNC3X | MQ3 | 211.19 | 199.28 | 118.64 | 40.34 | 39.07 | | | | | | |
| | | Per each DS1 COCI in combination per month | | | UNC1X | UC1D1 | 13.76 | 10.07 | 7.08 | 0.00 | 0.00 | | | | | | |
| | | Each Additional 2-Wire VG Loop(SL 2) in the same DS1 Interoffice Transport Combination - Zone 1 | | 1 | UNCVX | UEAL2 | 12.24 | 127.59 | 60.54 | 42.79 | 2.81 | | | | | | |
| | | Each Additional 2-Wire VG Loop(SL2) in the same DS1 Interoffice Transport Combination - Zone 2 | | 2 | UNCVX | UEAL2 | 17.40 | 127.59 | 60.54 | 42.79 | 2.81 | | | | | | |
| | | Each Additional 2-Wire VG Loop(SL2) in the same DS1 Interoffice Transport Combination - Zone 3 | | 3 | UNCVX | UEAL2 | 30.87 | 127.59 | 60.54 | 42.79 | 2.81 | | | | | | |
| | | Each Additional Voice Grade COCI in combination - per month | | | UNCVX | 1D1VG | 1.38 | 10.07 | 7.08 | 0.00 | 0.00 | | | | | | |
| | | Each Additional DS1 Interoffice Channel per mile in same 3/1 Channel System per month | | | UNC1X | 1L5XX | 0.1856 | | | | | | | | | | |
| | | Each Additional DS1 Interoffice Channel Facility Termination in same 3/1 Channel System per month | | | UNC1X | U1TF1 | 88.44 | 174.46 | 122.46 | 45.61 | 17.95 | | | | | | |
| | | Each Additional DS1 COCI combination per month | | | UNC1X | UC1D1 | 13.76 | 10.07 | 7.08 | 0.00 | 0.00 | | | | | | |

| UNBUNDLED NETWORK ELEMENTS - Florida | | | | | | | | | | | | | | Attachment: 2 | | Exhibit: A | |
|---|---|---|---|---|---|---|---|---|---|---|---|---|---|---|---|---|---|
| CATEGORY | | RATE ELEMENTS | Interim | Zone | BCS | USOC | RATES ($) | | | | | Svc Order Submitted Elec per LSR | Svc Order Submitted Manually per LSR | Incremental Charge - Manual Svc Order vs. Electronic-1st | Incremental Charge - Manual Svc Order vs. Electronic-Add'l | Incremental Charge - Manual Svc Order vs. Electronic-Disc 1st | Incremental Charge - Manual Svc Order vs. Electronic-Disc Add'l |
| | | | | | | | Rec | Nonrecurring | | Nonrecurring Disconnect | | OSS Rates ($) | | | | | |
| | | | | | | | | First | Add'l | First | Add'l | SOMEC | SOMAN | SOMAN | SOMAN | SOMAN | SOMAN |
| | | Nonrecurring Currently Combined Network Elements Switch -As-Is Charge | | | UNC1X | UNCCC | | 8.98 | 8.98 | 8.98 | 8.98 | | | | | | |
| | | EXTENDED 4-WIRE VOICE GRADE LOOP WITH DEDICATED DS1 INTEROFFICE TRANSPORT w/ 3/1 MUX | | | | | | | | | | | | | | | |
| | | First 4-Wire Analog Voice Grade Local Loop in Combination - Zone 1 | | 1 | UNCVX | UEAL4 | 18.89 | 127.59 | 60.54 | 42.79 | 2.81 | | | | | | |
| | | First 4-Wire Analog Voice Grade Local Loop in Combination - Zone 2 | | 2 | UNCVX | UEAL4 | 26.84 | 127.59 | 60.54 | 42.79 | 2.81 | | | | | | |
| | | First 4-Wire Analog Voice Grade Local Loop in Combination - Zone 3 | | 3 | UNCVX | UEAL4 | 47.62 | 127.59 | 60.54 | 42.79 | 2.81 | | | | | | |
| | | First Interoffice Transport - Dedicated - DS1 combination - Per Mile Per Month | | | UNC1X | 1L5XX | 0.1856 | | | | | | | | | | |
| | | First Interoffice Transport - Dedicated - DS1 - Facility Termination Per Month | | | UNC1X | U1TF1 | 88.44 | 174.46 | 122.46 | 45.61 | 17.95 | | | | | | |
| | | Per each 1/0 Channel System in combination Per Month | | | UNC1X | MQ1 | 146.77 | 101.42 | 71.62 | | | | | | | | |
| | | Per each Voice Grade COCI in combination - per month | | | UNCVX | 1D1VG | 1.38 | 10.07 | 7.08 | 0.00 | 0.00 | | | | | | |
| | | 3/1 Channel System in combination per month | | | UNC3X | MQ3 | 211.19 | 199.28 | 118.64 | 40.34 | 39.07 | | | | | | |
| | | Per each DS1 COCI in combination per month | | | UNC1X | UC1D1 | 13.76 | 10.07 | 7.08 | 0.00 | 0.00 | | | | | | |
| | | Additional 4-Wire Analog Voice Grade Loop in same DS1 Interoffice Transport Combination - Zone 1 | | 1 | UNCVX | UEAL4 | 18.89 | 127.59 | 60.54 | 42.79 | 2.81 | | | | | | |
| | | Additional 4-Wire Analog Voice Grade Loop in same DS1 Interoffice Transport Combination - Zone 2 | | 2 | UNCVX | UEAL4 | 26.84 | 127.59 | 60.54 | 42.79 | 2.81 | | | | | | |
| | | Additional 4-Wire Analog Voice Grade Loop in same DS1 Interoffice Transport Combination - Zone 3 | | 3 | UNCVX | UEAL4 | 47.62 | 127.59 | 60.54 | 42.79 | 2.81 | | | | | | |
| | | Each Additional DS1 Interoffice Channel per mile in same 3/1 Channel System per month | | | UNC1X | 1L5XX | 0.1856 | | | | | | | | | | |
| | | Each Additional DS1 Interoffice Channel Facility Termination in same 3/1 Channel System per month | | | UNC1X | U1TF1 | 88.44 | 174.46 | 122.46 | 45.61 | 17.95 | | | | | | |
| | | Additional Voice Grade COCI - in combination - per month | | | UNCVX | 1D1VG | 1.38 | 10.07 | 7.08 | 0.00 | 0.00 | | | | | | |
| | | Nonrecurring Currently Combined Network Elements Switch -As-Is Charge | | | UNC1X | UNCCC | | 8.98 | 8.98 | 8.98 | 8.98 | | | | | | |
| | | EXTENDED 4-WIRE 56 KBPS DIGITAL LOOP WITH DEDICATED DS1 INTEROFFICE TRANSPORT w/ 3/1 MUX | | | | | | | | | | | | | | | |
| | | First 4-Wire 56Kbps Digital Grade Local Loop in Combination - Zone 1 | | 1 | UNCDX | UDL56 | 22.20 | 127.59 | 60.54 | 42.79 | 2.81 | | | | | | |
| | | First 4-Wire 56Kbps Digital Grade Local Loop in Combination - Zone 2 | | 2 | UNCDX | UDL56 | 31.56 | 127.59 | 60.54 | 42.79 | 2.81 | | | | | | |
| | | First 4-Wire 56Kbps Digital Grade Local Loop in Combination - Zone 3 | | 3 | UNCDX | UDL56 | 55.99 | 127.59 | 60.54 | 42.79 | 2.81 | | | | | | |
| | | First Interoffice Transport - Dedicated - DS1 combination - Per Mile Per Month | | | UNC1X | 1L5XX | 0.1856 | | | | | | | | | | |
| | | First Interoffice Transport - Dedicated - DS1 - combination Facility Termination Per Month | | | UNC1X | U1TF1 | 88.44 | 174.46 | 122.46 | 45.61 | 17.95 | | | | | | |
| | | Per each 1/0 Channel System in combination Per Month | | | UNC1X | MQ1 | 146.77 | 101.42 | 71.62 | | | | | | | | |
| | | Per each OCU-DP COCI (data) COCI per month (2.4-64kbs) | | | UNCDX | 1D1DD | 2.10 | 10.07 | 7.08 | 0.00 | 0.00 | | | | | | |
| | | 3/1 Channel System in combination per month | | | UNC3X | MQ3 | 211.19 | 199.28 | 118.64 | 40.34 | 39.07 | | | | | | |
| | | Per each DS1 COCI in combination per month | | | UNC1X | UC1D1 | 13.76 | 10.07 | 7.08 | 0.00 | 0.00 | | | | | | |
| | | Additional 4-Wire 56Kbps Digital Grade Loop in same DS1 Interoffice Transport Combination - Zone 1 | | 1 | UNCDX | UDL56 | 22.20 | 127.59 | 60.54 | 42.79 | 2.81 | | | | | | |
| | | Additional 4-Wire 56Kbps Digital Grade Loop in same DS1 Interoffice Transport Combination - Zone 2 | | 2 | UNCDX | UDL56 | 31.56 | 127.59 | 60.54 | 42.79 | 2.81 | | | | | | |
| | | Additional 4-Wire 56Kbps Digital Grade Loop in same DS1 Interoffice Transport Combination - Zone 3 | | 3 | UNCDX | UDL56 | 55.99 | 127.59 | 60.54 | 42.79 | 2.81 | | | | | | |
| | | OCU-DP COCI (data) COCI in combination per month (2.4-64kbs) | | | UNCDX | 1D1DD | 2.10 | 10.07 | 7.08 | 0.00 | 0.00 | | | | | | |
| | | Each Additional DS1 Interoffice Channel per mile in same 3/1 Channel System per month | | | UNC1X | 1L5XX | 0.1856 | | | | | | | | | | |
| | | Each Additional DS1 Interoffice Channel Facility Termination in same 3/1 Channel System per month | | | UNC1X | U1TF1 | 88.44 | 174.46 | 122.46 | 45.61 | 17.95 | | | | | | |
| | | Each Additional DS1 COCI in the same 3/1 channel system combination per month | | | UNC1X | UC1D1 | 13.76 | 10.07 | 7.08 | 0.00 | 0.00 | | | | | | |

| UNBUNDLED NETWORK ELEMENTS - Florida | | | | | | | | | | | | | | Attachment: 2 | | Exhibit: A | |
|---|---|---|---|---|---|---|---|---|---|---|---|---|---|---|---|---|---|
| CATEGORY | | RATE ELEMENTS | Interim | Zone | BCS | USOC | RATES ($) | | | | | Svc Order Submitted Elec per LSR | Svc Order Submitted Manually per LSR | Incremental Charge - Manual Svc Order vs. Electronic-1st | Incremental Charge - Manual Svc Order vs. Electronic-Add'l | Incremental Charge - Manual Svc Order vs. Electronic-Disc 1st | Incremental Charge - Manual Svc Order vs. Electronic-Disc Add'l |
| | | | | | | | Rec | Nonrecurring | | Nonrecurring Disconnect | | OSS Rates ($) | | | | | |
| | | | | | | | | First | Add'l | First | Add'l | SOMEC | SOMAN | SOMAN | SOMAN | SOMAN | SOMAN |
| | | Nonrecurring Currently Combined Network Elements Switch -As-Is Charge | | | UNC1X | UNCCC | | 8.98 | 8.98 | 8.98 | 8.98 | | | | | | |
| | | **EXTENDED 4-WIRE 64 KBPS DIGITAL LOOP WITH DEDICATED DS1 INTEROFFICE TRANSPORT w/ 3/1 MUX** | | | | | | | | | | | | | | | |
| | | First 4-Wire 64Kbps Digital Grade Loop in a DS1 Interoffice Transport Combination - Zone 1 | | 1 | UNCDX | UDL64 | 22.20 | 127.59 | 60.54 | 42.79 | 2.81 | | | | | | |
| | | First 4-Wire 64Kbps Digital Grade Loop in a DS1 Interoffice Transport Combination - Zone 2 | | 2 | UNCDX | UDL64 | 31.56 | 127.59 | 60.54 | 42.79 | 2.81 | | | | | | |
| | | First 4-Wire 64Kbps Digital Grade Loop in a DS1 Interoffice Transport Combination - Zone 3 | | 3 | UNCDX | UDL64 | 55.99 | 127.59 | 60.54 | 42.79 | 2.81 | | | | | | |
| | | First Interoffice Transport - Dedicated - DS1 combination - Per Mile Per Month | | | UNC1X | 1L5XX | 0.1856 | | | | | | | | | | |
| | | First Interoffice Transport - Dedicated - DS1 combination - Facility Termination Per Month | | | UNC1X | U1TF1 | 88.44 | 174.46 | 122.46 | 45.61 | 17.95 | | | | | | |
| | | Per each Channel System 1/0 in combination Per Month | | | UNC1X | MQ1 | 146.77 | 101.42 | 71.62 | | | | | | | | |
| | | Per each OCU-DP COCI (data) in combination - per month (2.4-64kbs) | | | UNCDX | 1D1DD | 2.10 | 10.07 | 7.08 | 0.00 | 0.00 | | | | | | |
| | | 3/1 Channel System in combination per month | | | UNC3X | MQ3 | 211.19 | 199.28 | 118.64 | 40.34 | 39.07 | | | | | | |
| | | Per each DS1 COCI in combination per month | | | UNC1X | UC1D1 | 13.76 | 10.07 | 7.08 | 0.00 | 0.00 | | | | | | |
| | | Additional 4-Wire 64Kbps Digital Grade Loop in same DS1 Interoffice Transport Combination - Zone 1 | | 1 | UNCDX | UDL64 | 22.20 | 127.59 | 60.54 | 42.79 | 2.81 | | | | | | |
| | | Additional 4-Wire 64Kbps Digital Grade Loop in same DS1 Interoffice Transport Combination - Zone 2 | | 2 | UNCDX | UDL64 | 31.56 | 127.59 | 60.54 | 42.79 | 2.81 | | | | | | |
| | | Additional 4-Wire 64Kbps Digital Grade Loop in same DS1 Interoffice Transport Combination - Zone 3 | | 3 | UNCDX | UDL64 | 55.99 | 127.59 | 60.54 | 42.79 | 2.81 | | | | | | |
| | | Additional OCU-DP COCI (data) - DS1 to DS0 Channel System combination - per month (2.4-64kbs) | | | UNCDX | 1D1DD | 2.10 | 10.07 | 7.08 | 0.00 | 0.00 | | | | | | |
| | | Each Additional DS1 Interoffice Channel per mile in same 3/1 Channel System per month | | | UNC1X | 1L5XX | 0.1856 | | | | | | | | | | |
| | | Each Additional DS1 Interoffice Channel Facility Termination in same 3/1 Channel System per month | | | UNC1X | U1TF1 | 88.44 | 174.46 | 122.46 | 45.61 | 17.95 | | | | | | |
| | | Each Additional DS1 COCI in the same 3/1 channel system combination per month | | | UNC1X | UC1D1 | 13.76 | 10.07 | 7.08 | 0.00 | 0.00 | | | | | | |
| | | Nonrecurring Currently Combined Network Elements Switch -As-Is Charge | | | UNC1X | UNCCC | | 8.98 | 8.98 | 8.98 | 8.98 | | | | | | |
| | | **EXTENDED 2-WIRE ISDN LOOP WITH DS1 INTEROFFICE TRANSPORT w/ 3/1 MUX** | | | | | | | | | | | | | | | |
| | | First 2-Wire ISDN Loop in a DS1 Interoffice Combination Transport - Zone 1 | | 1 | UNCNX | U1L2X | 19.28 | 127.59 | 60.60 | 42.79 | 2.81 | | | | | | |
| | | First 2-Wire ISDN Loop in a DS1 Interoffice Combination Transport - Zone 2 | | 2 | UNCNX | U1L2X | 27.40 | 127.59 | 60.60 | 42.79 | 2.81 | | | | | | |
| | | First 2-Wire ISDN Loop in a DS1 Interoffice Combination Transport - Zone 3 | | 3 | UNCNX | U1L2X | 48.62 | 127.59 | 60.60 | 42.79 | 2.81 | | | | | | |
| | | First Interoffice Transport - Dedicated - DS1 combination - Per Mile per month | | | UNC1X | 1L5XX | 0.1856 | | | | | | | | | | |
| | | First Interoffice Transport - Dedicated - DS1 combination - Facility Termination per month | | | UNC1X | U1TF1 | 88.44 | 174.46 | 122.46 | 45.61 | 17.95 | | | | | | |
| | | Per each Channel System 1/0 in combination - per month | | | UNC1X | MQ1 | 146.77 | 101.42 | 71.62 | | | | | | | | |
| | | Per each 2-wire ISDN COCI (BRITE) in combination - per month | | | UNCNX | UC1CA | 3.66 | 10.07 | 7.08 | 0.00 | 0.00 | | | | | | |
| | | 3/1 Channel System in combination per month | | | UNC3X | MQ3 | 211.19 | 199.28 | 118.64 | 40.34 | 39.07 | | | | | | |
| | | Per each DS1 COCI in combination per month | | | UNC1X | UC1D1 | 13.76 | 10.07 | 7.08 | 0.00 | 0.00 | | | | | | |
| | | Additional 2-wire ISDN Loop in same DS1Interoffice Transport Combination - Zone 1 | | 1 | UNCNX | U1L2X | 19.28 | 127.59 | 60.60 | 42.79 | 2.81 | | | | | | |
| | | Additional 2-wire ISDN Loop in same DS1Interoffice Transport Combination - Zone 2 | | 2 | UNCNX | U1L2X | 27.40 | 127.59 | 60.60 | 42.79 | 2.81 | | | | | | |
| | | Additional 2-wire ISDN Loop in same DS1Interoffice Transport Combination - Zone 3 | | 3 | UNCNX | U1L2X | 48.62 | 127.59 | 60.60 | 42.79 | 2.81 | | | | | | |
| | | Additional 2-wire ISDN COCI (BRITE) in same 1/0 channel system combination- per month | | | UNCNX | UC1CA | 3.66 | 10.07 | 7.08 | 0.00 | 0.00 | | | | | | |

| UNBUNDLED NETWORK ELEMENTS - Florida | | | | | | | | | | | | | | Attachment: 2 | | Exhibit: A | |
|---|---|---|---|---|---|---|---|---|---|---|---|---|---|---|---|---|---|
| CATEGORY | RATE ELEMENTS | Interim | Zone | BCS | USOC | RATES ($) | | | | | Svc Order Submitted Elec per LSR | Svc Order Submitted Manually per LSR | Incremental Charge - Manual Svc Order vs. Electronic-1st | Incremental Charge - Manual Svc Order vs. Electronic-Add'l | Incremental Charge - Manual Svc Order vs. Electronic-Disc 1st | Incremental Charge - Manual Svc Order vs. Electronic-Disc Add'l |
| | | | | | | Rec | Nonrecurring | | Nonrecurring Disconnect | | OSS Rates ($) | | | | | |
| | | | | | | | First | Add'l | First | Add'l | SOMEC | SOMAN | SOMAN | SOMAN | SOMAN | SOMAN |
| | Each Additional DS1 Interoffice Channel per mile in same 3/1 Channel System per month | | | UNC1X | 1L5XX | 0.1856 | | | | | | | | | | |
| | Each Additional DS1 Interoffice Channel Facility Termination in same 3/1 Channel System per month | | | UNC1X | U1TF1 | 88.44 | 174.46 | 122.46 | 45.61 | 17.95 | | | | | | |
| | Each Additional DS1 COCI in the same 3/1 channel system combination per month | | | UNC1X | UC1D1 | 13.76 | 10.07 | 7.08 | 0.00 | 0.00 | | | | | | |
| | Nonrecurring Currently Combined Network Elements Switch -As-Is Charge | | | UNC1X | UNCCC | | 8.98 | 8.98 | 8.98 | 8.98 | | | | | | |
| | **EXTENDED 4-WIRE DS1 LOOP WITH DEDICATED DS1 INTEROFFICE TRANSPORT w/ 3/1 MUX** | | | | | | | | | | | | | | | |
| | First 4-wire DS1 Digital Lcoal Loop in Combination - Zone 1 | | 1 | UNC1X | USLXX | 70.74 | 217.75 | 121.62 | 51.44 | 14.45 | | | | | | |
| | First 4-wire DS1 Digital Lcoal Loop in Combination - Zone 2 | | 2 | UNC1X | USLXX | 100.54 | 217.75 | 121.62 | 51.44 | 14.45 | | | | | | |
| | First 4-wire DS1 Digital Lcoal Loop in Combination - Zone 3 | | 3 | UNC1X | USLXX | 178.39 | 217.75 | 121.62 | 51.44 | 14.45 | | | | | | |
| | First Interoffice Transport - Dedicated - DS1 combination - Per Mile Per Month | | | UNC1X | 1L5XX | 0.1856 | | | | | | | | | | |
| | First Interoffice Transport - Dedicated - DS1 combination - Facility Termination Per Month | | | UNC1X | U1TF1 | 88.44 | 174.46 | 122.46 | 45.61 | 17.95 | | | | | | |
| | 3/1 Channel System in combination per month | | | UNC3X | MQ3 | 211.19 | 199.28 | 118.64 | 40.34 | 39.07 | | | | | | |
| | Per each DS1 COCI combination per month | | | UNC1X | UC1D1 | 13.76 | 10.07 | 7.08 | 0.00 | 0.00 | | | | | | |
| | Each Additional DS1 Interoffice Channel per mile in same 3/1 Channel System per month | | | UNC1X | 1L5XX | 0.1856 | | | | | | | | | | |
| | Each Additional DS1 Interoffice Channel Facility Termination in same 3/1 Channel System per month | | | UNC1X | U1TF1 | 88.44 | 174.46 | 122.46 | 45.61 | 17.95 | | | | | | |
| | Each Additional DS1 COCI in the same 3/1 channel system combination per month | | | UNC1X | UC1D1 | 13.76 | 10.07 | 7.08 | 0.00 | 0.00 | | | | | | |
| | Additional 4-Wire DS1 Digital Local Loop in Combination - Zone 1 | | 1 | UNC1X | USLXX | 70.74 | 217.75 | 121.62 | 51.44 | 14.45 | | | | | | |
| | Additional 4-Wire DS1 Digital Local Loop in Combination - Zone 2 | | 2 | UNC1X | USLXX | 100.54 | 217.75 | 121.62 | 51.44 | 14.45 | | | | | | |
| | Additional 4-Wire DS1 Digital Local Loop in Combination - Zone 3 | | 3 | UNC1X | USLXX | 178.39 | 217.75 | 121.62 | 51.44 | 14.45 | | | | | | |
| | Nonrecurring Currently Combined Network Elements Switch -As-Is Charge | | | UNC1X | UNCCC | | 8.98 | 8.98 | 8.98 | 8.98 | | | | | | |
| | **EXTENDED 4-WIRE 56 KBPS DIGITAL EXTENDED LOOP WITH DS0 INTEROFFICE TRANSPORT** | | | | | | | | | | | | | | | |
| | First 4-wire 56 kbps Local Loop in combination - Zone 1 | | 1 | UNCDX | UDL56 | 22.20 | 127.59 | 60.54 | 42.79 | 2.81 | | | | | | |
| | First 4-wire 56 kbps Local Loop in combination - Zone 2 | | 2 | UNCDX | UDL56 | 31.56 | 127.59 | 60.54 | 42.79 | 2.81 | | | | | | |
| | First 4-wire 56 kbps Local Loop in combination - Zone 3 | | 3 | UNCDX | UDL56 | 55.99 | 127.59 | 60.54 | 42.79 | 2.81 | | | | | | |
| | First 4-wiree 56 kbps Interoffice Transport - Dedicated - Per Mile per month | | | UNCDX | 1L5XX | 0.0091 | | | | | | | | | | |
| | First 4-wire 56 kbps Interoffice Transport - Dedicated - Facility Termination per month | | | UNCDX | U1TD5 | 18.44 | 94.70 | 52.59 | 50.49 | 21.53 | | | | | | |
| | Nonrecurring Currently Combined Network Elements Switch -As-Is Charge | | | UNCDX | UNCCC | | 8.98 | 8.98 | 8.98 | 8.98 | | | | | | |
| | **EXTENDED 4-WIRE 64 KBPS DIGITAL EXTENDED LOOP WITH DS0 INTEROFFICE TRANSPORT** | | | | | | | | | | | | | | | |
| | First 4-wire 64 kbps Local Loop in combination - Zone 1 | | 1 | UNCDX | UDL64 | 22.20 | 127.59 | 60.54 | 42.79 | 2.81 | | | | | | |
| | First 4-wire 64 kbps Local Loop in combination - Zone 2 | | 2 | UNCDX | UDL64 | 31.56 | 127.59 | 60.54 | 42.79 | 2.81 | | | | | | |
| | First 4-wire 64 kbps Local Loop in combination - Zone 3 | | 3 | UNCDX | UDL64 | 55.99 | 127.59 | 60.54 | 42.79 | 2.81 | | | | | | |
| | First I4-wire 65 kbps Interoffice Transport - Dedicated - Per Mile per month | | | UNCDX | 1L5XX | 0.0091 | | | | | | | | | | |
| | First 4-wire 64 kbps Interoffice Transport - Dedicated - Facility Termination per month | | | UNCDX | U1TD6 | 18.44 | 94.70 | 52.59 | 50.49 | 21.53 | | | | | | |
| | Nonrecurring Currently Combined Network Elements Switch -As-Is Charge | | | UNCDX | UNCCC | | 8.98 | 8.98 | 8.98 | 8.98 | | | | | | |
| **ADDITIONAL NETWORK ELEMENTS** | | | | | | | | | | | | | | | | |
| | **When used as a part of a currently combined facility, the non-recurrng charges do not apply, but a Switch As Is charge does apply.** | | | | | | | | | | | | | | | |
| | **When used as ordinarily combined network elements in All States, the non-recurring charges apply and the Switch As Is Charge does not.** | | | | | | | | | | | | | | | |
| | **Nonrecurring Currently Combined Network Elements "Switch As Is" Charge (One applies to each combination)** | | | | | | | | | | | | | | | |
| | Nonrecurring Currently Combined Network Elements Switch -As-Is Charge - 2 wire/4-Wire VG | | | UNCVX | UNCCC | | 8.98 | 8.98 | 8.98 | 8.98 | | | | | | |

| UNBUNDLED NETWORK ELEMENTS - Florida | | | | | | | | | | | | | | Attachment: 2 | | Exhibit: A | |
|---|---|---|---|---|---|---|---|---|---|---|---|---|---|---|---|---|---|
| CATEGORY | | RATE ELEMENTS | Interim | Zone | BCS | USOC | RATES ($) | | | | | Svc Order Submitted Elec per LSR | Svc Order Submitted Manually per LSR | Incremental Charge - Manual Svc Order vs. Electronic-1st | Incremental Charge - Manual Svc Order vs. Electronic-Add'l | Incremental Charge - Manual Svc Order vs. Electronic-Disc 1st | Incremental Charge - Manual Svc Order vs. Electronic-Disc Add'l |
| | | | | | | | Rec | Nonrecurring | | Nonrecurring Disconnect | | OSS Rates ($) | | | | | |
| | | | | | | | | First | Add'l | First | Add'l | SOMEC | SOMAN | SOMAN | SOMAN | SOMAN | SOMAN |
| | | Nonrecurring Currently Combined Network Elements Switch -As-Is Charge - 56/64 kbps | | | UNCDX | UNCCC | | 8.98 | 8.98 | 8.98 | 8.98 | | | | | | |
| | | Nonrecurring Currently Combined Network Elements Switch -As-Is Charge - DS1 | | | UNC1X | UNCCC | | 8.98 | 8.98 | 8.98 | 8.98 | | | | | | |
| | | Nonrecurring Currently Combined Network Elements Switch -As-Is Charge - DS3 | | | UNC3X | UNCCC | | 8.98 | 8.98 | 8.98 | 8.98 | | | | | | |
| | | Nonrecurring Currently Combined Network Elements Switch -As-Is Charge - STS1 | | | UNCSX | UNCCC | | 8.98 | 8.98 | 8.98 | 8.98 | | | | | | |
| | Optional Features & Functions: | | | | | | | | | | | | | | | | |
| | | Clear Channel Capability Extended Frame Option - per DS1 | I | | U1TD1, ULDD1,UNC1X | CCOEF | | 0I | 0I | 0I | 0I | | | | | | |
| | | Clear Channel Capability Super FrameOption - per DS1 | I | | U1TD1, ULDD1,UNC1X | CCOSF | | 0I | 0I | 0I | 0I | | | | | | |
| | | Clear Channel Capability (SF/ESF) Option - Subsequent Activity - per DS1 | I | | ULDD1, U1TD1, UNC1X, USL | NRCCC | | 184.92S | 23.82S | 2.07S | 0.8S | | | | | | |
| | | C-bit Parity Option - Subsequent Activity - per DS3 | I | | U1TD3, ULDD3, UE3, UNC3X | NRCC3 | | 219.09S | 7.67S | 0.773S | 0S | | | | | | |
| | MULTIPLEXERS | | | | | | | | | | | | | | | | |
| | | DS1 to DS0 Channel System per month | | | UNC1X | MQ1 | 146.77 | 101.42 | 71.62 | | | | | | | | |
| | | OCU-DP COCI (data) - DS1 to DS0 Channel System - per month (2.4-64kbs) used for a Local Loop | | | UDL | 1D1DD | 2.10 | 10.07 | 7.08 | | | | | | | | |
| | | OCU-DP COCI (data) - DS1 to DS0 Channel System - per month (2.4-64kbs) used for connection to a channelized DS1 Local Channel in the same SWC as collocation | | | U1TUD | 1D1DD | 2.10 | 10.07 | 7.08 | 0.00 | 0.00 | | | | | | |
| | | 2-wire ISDN COCI (BRITE) - DS1 to DS0 Channel Systsem - per month for a Local Loop | | | UDN | UC1CA | 3.66 | 10.07 | 7.08 | | | | | | | | |
| | | 2-wire ISDN COCI (BRITE) - DS1 to DS0 Channel Systsem - per month used for connection to a channelized DS1 Local Channel in the same SWC as collocation | | | U1TUB | UC1CA | 3.66 | 10.07 | 7.08 | 0.00 | 0.00 | | | | | | |
| | | Voice Grade COCI - DS1 to DS0 Channel System - per month used for a Local Loop | | | UEA | 1D1VG | 1.38 | 10.07 | 7.08 | | | | | | | | |
| | | Voice Grade COCI - DS1 to DS0 Channel System - per month used for connection to a channelized DS1 Local Channel in the same SWC as collocation | | | U1TUC | 1D1VG | 1.38 | 10.07 | 7.08 | 0.00 | 0.00 | | | | | | |
| | | DS3 to DS1 Channel System per month | | | UNC3X | MQ3 | 211.19 | 199.28 | 118.64 | 40.34 | 39.07 | | | | | | |
| | | STS-1 to DS1 Channel System per month | | | UNXCS | MQ3 | 211.19 | 199.28 | 118.64 | 40.34 | 39.07 | | | | | | |
| | | DS1 COCI used with Loop per month | | | USL | UC1D1 | 13.76 | 10.07 | 7.08 | | | | | | | | |
| | | DS1 COCI (used for connection to a channelized DS1 Local Channel in the same SWC as collocation) per month | | | U1TUA | UC1D1 | 13.76 | 10.07 | 7.08 | 0.00 | 0.00 | | | | | | |
| | | DS1 COCI used with Interoffice Channel per month | | | U1TD1 | UC1D1 | 13.76 | 10.07 | 7.08 | 0.00 | 0.00 | | | | | | |
| | | DS3 Interface Unit (DS1 COCI) used with Local Channel per month | | | ULDD1 | UC1D1 | 13.76 | 10.07 | 7.08 | 0.00 | 0.00 | | | | | | |
| UNBUNDLED LOCAL EXCHANGE SWITCHING(PORTS) | | | | | | | | | | | | | | | | | |
| | Exchange Ports | | | | | | | | | | | | | | | | |
| | NOTE: Although the Port Rate includes all available features in GA, KY, LA & TN, the desired features will need to be ordered using retail USOCs | | | | | | | | | | | | | | | | |
| | 2-WIRE VOICE GRADE LINE PORT RATES (RES) | | | | | | | | | | | | | | | | |
| | | Exchange Ports - 2-Wire Analog Line Port- Res. | | | UEPSR | UEPRL | 1.40 | 3.74 | 3.63 | 1.88 | 1.80 | | | | | | |
| | | Exchange Ports - 2-Wire Analog Line Port with Caller ID - Res. | | | UEPSR | UEPRC | 1.40 | 3.74 | 3.63 | 1.88 | 1.80 | | | | | | |
| | | Exchange Ports - 2-Wire Analog Line Port outgoing only - Res. | | | UEPSR | UEPRO | 1.40 | 3.74 | 3.63 | 1.88 | 1.80 | | | | | | |
| | | Exchange Ports - 2-Wire VG unbundled Florida area calling with Caller ID - Res. | | | UEPSR | UEPAF | 1.40 | 3.74 | 3.63 | 1.88 | 1.80 | | | | | | |
| | | Exchange Ports - 2-Wire VG unbundled Florida Residence Area Calling Plan, without Caller ID capability | | | UEPSR | UEPA9 | 1.40 | 3.74 | 3.63 | 1.88 | 1.80 | | | | | | |
| | | Exchange Ports - 2-Wire VG unbundled Florida extended dialing port for use with CREX7 and Caller ID | | | UEPSR | UEPA1 | 1.40 | 3.74 | 3.63 | 1.88 | 1.80 | | | | | | |
| | | Exchange Ports - 2-Wire VG unbundled Florida extended dialing port for use with CREX7, without Caller ID capability | | | UEPSR | UEPA8 | 1.40 | 3.74 | 3.63 | 1.88 | 1.80 | | | | | | |

| UNBUNDLED NETWORK ELEMENTS - Florida | | | | | | | | | | | | | | Attachment: 2 | | Exhibit: A | |
|---|---|---|---|---|---|---|---|---|---|---|---|---|---|---|---|---|---|
| CATEGORY | RATE ELEMENTS | Interim | Zone | BCS | USOC | RATES ($) | | | | | Svc Order Submitted Elec per LSR | Svc Order Submitted Manually per LSR | Incremental Charge - Manual Svc Order vs. Electronic- 1st | Incremental Charge - Manual Svc Order vs. Electronic- Add'l | Incremental Charge - Manual Svc Order vs. Electronic- Disc 1st | Incremental Charge - Manual Svc Order vs. Electronic- Disc Add'l |
| | | | | | | Rec | Nonrecurring | | Nonrecurring Disconnect | | OSS Rates ($) | | | | | |
| | | | | | | | First | Add'l | First | Add'l | SOMEC | SOMAN | SOMAN | SOMAN | SOMAN | SOMAN |
| | Exchange Ports - 2-Wire VG unbundled res, low usage line port with Caller ID (LUM) | | | UEPSR | UEPAP | 1.40 | 3.74 | 3.63 | 1.88 | 1.80 | | | | | | |
| | 2-Wire voice unbundled Low Usage Line Port without Caller ID Capability | | | UEPSR | UEPRT | 1.40 | 3.74 | 3.63 | 1.88 | 1.80 | | | | | | |
| | Subsequent Activity | | | UEPSR | USASC | 0.00 | 0.00 | 0.00 | | | | | | | | |
| FEATURES | | | | | | | | | | | | | | | | |
| | All Available Vertical Features | | | UEPSR | UEPVF | 2.26 | 0.00 | 0.00 | | | | | | | | |
| 2-WIRE VOICE GRADE LINE PORT RATES (BUS) | | | | | | | | | | | | | | | | |
| | Exchange Ports - 2-Wire Analog Line Port without Caller ID - Bus | | | UEPSB | UEPBL | 1.40 | 3.74 | 3.63 | 1.88 | 1.80 | | | | | | |
| | Exchange Ports - 2-Wire VG unbundled Line Port with unbundled port with Caller+E484 ID - Bus. | | | UEPSB | UEPBC | 1.40 | 3.74 | 3.63 | 1.88 | 1.80 | | | | | | |
| | Exchange Ports - 2-Wire Analog Line Port outgoing only - Bus. | | | UEPSB | UEPBO | 1.40 | 3.74 | 3.63 | 1.88 | 1.80 | | | | | | |
| | Exhange Ports - 2-Wire VG unbundled incoming only port with Caller ID - Bus | | | UEPSB | UEPB1 | 1.40 | 3.74 | 3.63 | 1.88 | 1.80 | | | | | | |
| | 2-Wire voice unbundled Incoming Only Port without Caller ID Capability | | | UEPSB | UEPBE | 1.40 | 3.74 | 3.63 | 1.88 | 1.80 | | | | | | |
| | Subsequent Activity | | | UEPSB | USASC | 0.00 | 0.00 | 0.00 | | | | | | | | |
| FEATURES | | | | | | | | | | | | | | | | |
| | All Available Vertical Features | | | UEPSB | UEPVF | 2.26 | 0.00 | 0.00 | | | | | | | | |
| EXCHANGE PORT RATES (DID & PBX) | | | | | | | | | | | | | | | | |
| | 2-Wire VG Unbundled 2-Way PBX Trunk - Res | | | UEPSE | UEPRD | 1.40 | 39.06 | 18.18 | 12.35 | 0.7187 | | | | | | |
| | 2-Wire VG Line Side Unbundled 2-Way PBX Trunk - Bus | | | UEPSP | UEPPC | 1.40 | 39.06 | 18.18 | 12.35 | 0.7187 | | | | | | |
| | 2-Wire VG Line Side Unbundled Outward PBX Trunk - Bus | | | UEPSP | UEPPO | 1.40 | 39.06 | 18.18 | 12.35 | 0.7187 | | | | | | |
| | 2-Wire VG Line Side Unbundled Incoming PBX Trunk - Bus | | | UEPSP | UEPP1 | 1.40 | 39.06 | 18.18 | 12.35 | 0.7187 | | | | | | |
| | 2-Wire Analog Long Distance Terminal PBX Trunk - Bus | | | UEPSP | UEPLD | 1.40 | 39.06 | 18.18 | 12.35 | 0.7187 | | | | | | |
| | 2-Wire Voice Unbundled PBX LD Terminal Ports | | | UEPSP | UEPLD | 1.40 | 39.06 | 18.18 | 12.35 | 0.7187 | | | | | | |
| | 2-Wire Vice Unbundled 2-Way PBX Usage Port | | | UEPSP | UEPXA | 1.40 | 39.06 | 18.18 | 12.35 | 0.7187 | | | | | | |
| | 2-Wire Voice Unbundled PBX Toll Terminal Hotel Ports | | | UEPSP | UEPXB | 1.40 | 39.06 | 18.18 | 12.35 | 0.7187 | | | | | | |
| | 2-Wire Voice Unbundled PBX LD DDD Terminals Port | | | UEPSP | UEPXC | 1.40 | 39.06 | 18.18 | 12.35 | 0.7187 | | | | | | |
| | 2-Wire Voice Unbundled PBX LD Terminal Switchboard Port | | | UEPSP | UEPXD | 1.40 | 39.06 | 18.18 | 12.35 | 0.7187 | | | | | | |
| | 2-Wire Voice Unbundled PBX LD Terminal Switchboard IDD Capable Port | | | UEPSP | UEPXE | 1.40 | 39.06 | 18.18 | 12.35 | 0.7187 | | | | | | |
| | 2-Wire Voice Unbundled 2-Way PBX Hotel/Hospital Economy Administrative Calling Port | | | UEPSP | UEPXL | 1.40 | 39.06 | 18.18 | 12.35 | 0.7187 | | | | | | |
| | 2-Wire Voice Unbundled 2-Way PBX Hotel/Hospital Economy Room Calling Port | | | UEPSP | UEPXM | 1.40 | 39.06 | 18.18 | 12.35 | 0.7187 | | | | | | |
| | 2-Wire Voice Unbundled 1-Way Outgoing PBX Hotel/Hospital Discount Room Calling Port | | | UEPSP | UEPXO | 1.40 | 39.06 | 18.18 | 12.35 | 0.7187 | | | | | | |
| | 2-Wire Voice Unbundled 1-Way Outgoing PBX Measured Port | | | UEPSP | UEPXS | 1.40 | 39.06 | 18.18 | 12.35 | 0.7187 | | | | | | |
| | Subsequent Activity | | | UEPSP | USASC | 0.00 | 0.00 | 0.00 | | | | | | | | |
| FEATURES | | | | | | | | | | | | | | | | |
| | All Available Vertical Features | | | UEPSP UEPSE | UEPVF | 2.26 | 0.00 | 0.00 | | | | | | | | |
| EXCHANGE PORT RATES (COIN) | | | | | | | | | | | | | | | | |
| | Exchange Ports - Coin Port | | | | | 1.40 | 3.74 | 3.63 | 1.88 | 1.80 | | | | | | |
| NOTE: Transmission/usage charges associated with POTS circuit switched usage will also apply to circuit switched voice and/or circuit switched data transmission by B-Channels associated with 2-wire ISDN ports. | | | | | | | | | | | | | | | | |
| NOTE: Access to B Channel or D Channel Packet capabilities will be available only through BFR/New Business Request Process. Rates for the packet capabilities will be determined via the Bona Fide Request/New Business Request Process. | | | | | | | | | | | | | | | | |
| UNBUNDLED LOCAL EXCHANGE SWITCHING(PORTS) | | | | | | | | | | | | | | | | |
| EXCHANGE PORT RATES | | | | | | | | | | | | | | | | |
| The DS1 Port rates below for 4-Wire DDITS Trunk Port and 4-Wire ISDN Port in this rate exhibit apply to the embedded base in place as of 10/2/03 until 4/1/04. After 4/1/04 these rates shall revert to tariff rates or a separate agreement. | | | | | | | | | | | | | | | | |
| Requests for 4-Wire DDITS Trunk Ports with 4-Wire ISDN DS1 Ports after the effective date of this amendment shall be provided pursuant to a separate agreement or tariff at BellSouth's discretion. | | | | | | | | | | | | | | | | |
| | Exchange Ports - 2-Wire DID Port | | | UEPEX | UEPP2 | 8.73 | 78.41 | 15.82 | 41.94 | 4.26 | | | | | | |
| | Exchange Ports - DDITS Port - 4-Wire DS1 Port with DID capability (E:4/1/2004) | | | UEPDD | UEPDD | 54.95 | 151.11 | 77.75 | 48.81 | 3.10 | | | | | | |
| | Exchange Ports - 2-Wire ISDN Port (See Notes below.) | | | UEPTX, UEPSX | U1PMA | 8.83 | 46.83 | 50.68 | 27.64 | 11.93 | | | | | | |
| | All Features Offered | | | UEPTX, UEPSX | UEPVF | 2.26 | 0.00 | 0.00 | | | | | | | | |
| | Exchange Ports - 2-Wire ISDN Port -- Channel Profiles | | | UEPTX, UEPSX | U1UMA | 0.00 | 0.00 | 0.00 | | | | | | | | |
| NOTE: Access to B Channel or D Channel Packet capabilities will be available only through BFR/New Business Request Process. Rates for the packet capabilities will be determined via the Bona Fide Request/New Business Request Process. | | | | | | | | | | | | | | | | |

| UNBUNDLED NETWORK ELEMENTS - Florida | | | | | | | | | | | | | | Attachment: 2 | | Exhibit: A | |
|---|---|---|---|---|---|---|---|---|---|---|---|---|---|---|---|---|---|
| CATEGORY | RATE ELEMENTS | Interim | Zone | BCS | USOC | RATES ($) | | | | | Svc Order Submitted Elec per LSR | Svc Order Submitted Manually per LSR | Incremental Charge - Manual Svc Order vs. Electronic-1st | Incremental Charge - Manual Svc Order vs. Electronic-Add'l | Incremental Charge - Manual Svc Order vs. Electronic-Disc 1st | Incremental Charge - Manual Svc Order vs. Electronic-Disc Add'l |
| | | | | | | Rec | Nonrecurring | | Nonrecurring Disconnect | | OSS Rates ($) | | | | | |
| | | | | | | | First | Add'l | First | Add'l | SOMEC | SOMAN | SOMAN | SOMAN | SOMAN | SOMAN |
| NOTE: Access to B Channel or D Channel Packet capabilities will be available only through BFR/New Business Request Process. Rates for the packet capabilities will be determined via the Bona Fide Request/New Business Request Process. | | | | | | | | | | | | | | | | | |
| EXCHANGE PORT RATES (continued) | | | | | | | | | | | | | | | | | |
| | Exchange Ports - 4-Wire ISDN DS1 Port with Detailed E911 Locator Capability (E:4/1/2004) | | | UEPEX | UEPEX | 82.74 | 174.61 | 95.17 | 49.80 | 18.23 | | | | | | |
| | Exchange Ports - 4-Wire ISDN DS1 Port (E:4/1/2004) | | | UEPDX | UEPDX | 82.74 | 174.61 | 95.17 | 49.80 | 18.23 | | | | | | |
| | Physical Collocation - DS1 Cross-Connects | | | UEPEX UEPDX | PE1P1 | 1.32 | 27.77 | 15.52 | 5.93 | 4.77 | | | | | | |
| | Virtual collocation - Special Access & UNE, cross-connect per DS1 | | | UEPEX UEPDX | CNC1X | 7.50 | 155.00 | 14.00 | | | | | | | | |
| Detailed E911 with Locator Capability (required with UEPEX port) | | | | | | | | | | | | | | | | | |
| | Unbundled Exchange Ports, 4-Wire ISDN DS1 Port - E911 Locator Capability - Initial Profile Establishment per CLEC per State | | | UEPEX | UEP1A | 0.00 | 1,809.00 | | 151.12 | | | | | | | |
| | Unbundled Exchange Ports, 4-Wire ISDN DS1 Port - E911 Locator Capability - Subsequent Profile Changes, Additions, Deletions | | | UEPEX | UEP1B | 0.00 | 175.66 | | | | | | | | | |
| New or Additional PRI Telephone Numbers | | | | | | | | | | | | | | | | | |
| | Unbundled Exchange Ports, 4-Wire ISDN DS1 Port - E911 Locator Capability 2-way Telephone Numbers, per number in E911 profile [New or Additional] | | | UEPEX | UEP1C | 0.0699 | 0.5412 | | | | | | | | | |
| | Unbundled Exchange Ports, 4-Wire ISDN DS1 Port - E911 Locator Capability - Outdial Telephone Numbers, per number in E911 profile [New or Additional] | | | UEPEX | UEP1D | 0.0699 | 12.71 | 12.71 | | | | | | | | |
| | Unbundled Exchange Ports, 4-Wire ISDN DS1 Port - Inward Telephone Numbers - Inward Data Only Option [New or Additional] | | | UEPDX | UEP1E | 0.00 | 0.5412 | | | | | | | | | |
| | Exchange Ports - 4-Wire ISDN DS1 Port - Subsequent [New] Inward Tel Numbers [Customer Testing Purposes] | | | UEPEX | PR7ZT | 0.00 | 25.42 | 25.42 | | | | | | | | |
| LOCAL NUMBER PORTABILITY | | | | | | | | | | | | | | | | | |
| | Local Number Portability (1 per port) | | | UEPEX UEPDX | LNPCN | 1.75 | | | | | | | | | | |
| INTERFACE (Provsioning Only) | | | | | | | | | | | | | | | | | |
| | Voice/Data | | | UEPEX | PR71V | 0.00 | 0.00 | 0.00 | | | | | | | | |
| | Digital Data | | | UEPEX | PR71D | 0.00 | 0.00 | 0.00 | | | | | | | | |
| | Inward Data | | | UEPDX | PR71E | 0.00 | 0.00 | 0.00 | | | | | | | | |
| New or Additional Channel | | | | | | | | | | | | | | | | | |
| | New or Additional - Voice/Data "B" Channel | | | UEPEX | PR7BV | 0.00 | 15.48 | | | | | | | | | |
| | New or Additional - Digital Data "B" Channel | | | UEPEX | PR7BF | 0.00 | 15.48 | | | | | | | | | |
| | New or Additional Inward Data "B" Channel | | | UEPDX | PR7BD | 0.00 | 15.48 | | | | | | | | | |
| | New or Additional Useage Sensitive Voice Data "B" Channel | | | UEPEX | PR7BS | 0.00 | | | | | | | | | | |
| | New or Additional Useage Sensitive Digital Data "B" Channel | | | UEPEX | PR7BU | 0.00 | | | | | | | | | | |
| | New or Additional PRI "D" Channel | | | UEPEX | PR7EX | 0.00 | 15.48 | | | | | | | | | |
| CALL TYPES | | | | | | | | | | | | | | | | | |
| | Inward | | | UEPEX UEPDX | PR7C1 | 0.00 | 0.00 | 0.00 | | | | | | | | |
| | Outward | | | UEPEX | PR7CO | 0.00 | 0.00 | 0.00 | | | | | | | | |
| | Two-way | | | UEPEX | PR7CC | 0.00 | 0.00 | 0.00 | | | | | | | | |
| UNBUNDLED PORT with REMOTE CALL FORWARDING CAPABILITY | | | | | | | | | | | | | | | | | |
| UNBUNDLED REMOTE CALL FORWARDING SERVICE - RESIDENCE | | | | | | | | | | | | | | | | | |
| | Unbundled Remote Call Forwarding Service, Area Calling, Res | | | UEPVR | UERAC | 1.40 | 3.74 | 3.63 | 1.88 | 1.80 | | | | | | |
| | Unbundled Remote Call Forwarding Service, Local Calling - Res | | | UEPVR | UERLC | 1.40 | 3.74 | 3.63 | 1.88 | 1.80 | | | | | | |
| | Unbundled Remote Call Forwarding Service, InterLATA - Res | | | UEPVR | UERTE | 1.40 | 3.74 | 3.63 | 1.88 | 1.80 | | | | | | |
| | Unbundled Remote Call Forwarding Service, IntraLATA - Res | | | UEPVR | UERTR | 1.40 | 3.74 | 3.63 | 1.88 | 1.80 | | | | | | |
| Non-Recurring | | | | | | | | | | | | | | | | | |
| | Unbundled Remote Call Forwarding Service - Conversion - Switch-as-is | | | UEPVR | USAC2 | | 0.102 | 0.102 | | | | | | | | |
| | Unbundled Remote Call Forwarding Service - Conversion with allowed change (PIC and LPIC) | | | UEPVR | USACC | | 0.102 | 0.102 | | | | | | | | |
| UNBUNDLED REMOTE CALL FORWARDING - Bus | | | | | | | | | | | | | | | | | |
| | Unbundled Remote Call Forwarding Service, Area Calling - Bus | | | UEPVB | UERAC | 1.40 | 3.74 | 3.63 | 1.88 | 1.80 | | | | | | |

| UNBUNDLED NETWORK ELEMENTS - Florida | | | | | | | | | | | | | | Attachment: 2 | | Exhibit: A | |
|---|---|---|---|---|---|---|---|---|---|---|---|---|---|---|---|---|---|
| CATEGORY | RATE ELEMENTS | Interim | Zone | BCS | USOC | RATES ($) | | | | | Svc Order Submitted Elec per LSR | Svc Order Submitted Manually per LSR | Incremental Charge - Manual Svc Order vs. Electronic-1st | Incremental Charge - Manual Svc Order vs. Electronic-Add'l | Incremental Charge - Manual Svc Order vs. Electronic-Disc 1st | Incremental Charge - Manual Svc Order vs. Electronic-Disc Add'l |
| | | | | | | Rec | Nonrecurring | | Nonrecurring Disconnect | | OSS Rates ($) | | | | | |
| | | | | | | | First | Add'l | First | Add'l | SOMEC | SOMAN | SOMAN | SOMAN | SOMAN | SOMAN |
| | Unbundled Remote Call Forwarding Service, Local Calling - Bus | | | UEPVB | UERLC | 1.40 | 3.74 | 3.63 | 1.88 | 1.80 | | | | | | |
| | Unbundled Remote Call Forwarding Service, InterLATA - Bus | | | UEPVB | UERTE | 1.40 | 3.74 | 3.63 | 1.88 | 1.80 | | | | | | |
| | Unbundled Remote Call Forwarding Service, IntraLATA - Bus | | | UEPVB | UERTR | 1.40 | 3.74 | 3.63 | 1.88 | 1.80 | | | | | | |
| | Unbundled Remote Call Forwarding Service Expanded and Exception Local Calling | | | UEPVB | UERVJ | 1.40 | 3.74 | 3.63 | 1.88 | 1.80 | | | | | | |
| Non-Recurring | | | | | | | | | | | | | | | | |
| | Unbundled Remote Call Forwarding Service - Conversion - Switch-as-is | | | UEPVB | USAC2 | | 0.102 | 0.102 | | | | | | | | |
| | Unbundled Remote Call Forwarding Service - Conversion with allowed change (PIC and LPIC) | | | UEPVB | USACC | | 0.102 | 0.102 | | | | | | | | |
| UNBUNDLED LOCAL SWITCHING, PORT USAGE | | | | | | | | | | | | | | | | |
| End Office Switching (Port Usage) | | | | | | | | | | | | | | | | |
| | End Office Switching Function, Per MOU | | | | | 0.0007662 | | | | | | | | | | |
| | End Office Trunk Port - Shared, Per MOU | | | | | 0.000164 | | | | | | | | | | |
| Tandem Switching (Port Usage) (Local or Access Tandem) | | | | | | | | | | | | | | | | |
| | Tandem Switching Function Per MOU | | | | | 0.0001319 | | | | | | | | | | |
| | Tandem Trunk Port - Shared, Per MOU | | | | | 0.000235 | | | | | | | | | | |
| | Tandem Switching Function Per MOU (Melded) | | | | | 0.000027185 | | | | | | | | | | |
| | Tandem Trunk Port - Shared, Per MOU (Melded) | | | | | 0.000048434 | | | | | | | | | | |
| | Melded Factor: 20.61% of the Tandem Rate | | | | | | | | | | | | | | | |
| Common Transport | | | | | | | | | | | | | | | | |
| | Common Transport - Per Mile, Per MOU | | | | | 0.0000035 | | | | | | | | | | |
| | Common Transport - Facilities Termination Per MOU | | | | | 0.0004372 | | | | | | | | | | |
| UNBUNDLED PORT/LOOP COMBINATIONS - COST BASED RATES | | | | | | | | | | | | | | | | |
| Cost Based Rates are applied where BellSouth is required by FCC and/or State Commission rule to provide Unbundled Local Switching or Switch Ports. | | | | | | | | | | | | | | | | |
| Features shall apply to the Unbundled Port/Loop Combination - Cost Based Rate section in the same manner as they are applied to the Stand-Alone Unbundled Port section of this Rate Exhibit. | | | | | | | | | | | | | | | | |
| End Office and Tandem Switching Usage and Common Transport Usage rates in the Port section of this rate exhibit shall apply to all combinations of loop/port network elements except for UNE Coin Port/Loop Combinations. | | | | | | | | | | | | | | | | |
| The first and additional Port nonrecurring charges apply to Not Currently Combined Combos. For Currently Combined Combos the nonrecurring charges shall be those identified in the Nonrecurring - Currently Combined sections. | | | | | | | | | | | | | | | | |
| 2-WIRE VOICE GRADE LOOP WITH 2-WIRE LINE PORT (RES) | | | | | | | | | | | | | | | | |
| UNE Port/Loop Combination Rates | | | | | | | | | | | | | | | | |
| | 2-Wire VG Loop/Port Combo - Zone 1 | | 1 | | | 10.94 | | | | | | | | | | |
| | 2-Wire VG Loop/Port Combo - Zone 2 | | 2 | | | 15.05 | | | | | | | | | | |
| | 2-Wire VG Loop/Port Combo - Zone 3 | | 3 | | | 25.80 | | | | | | | | | | |
| UNE Loop Rates | | | | | | | | | | | | | | | | |
| | 2-Wire Voice Grade Loop (SL1) - Zone 1 | | 1 | UEPRX | UEPLX | 9.77 | | | | | | | | | | |
| | 2-Wire Voice Grade Loop (SL1) - Zone 2 | | 2 | UEPRX | UEPLX | 13.88 | | | | | | | | | | |
| | 2-Wire Voice Grade Loop (SL1) - Zone 3 | | 3 | UEPRX | UEPLX | 24.63 | | | | | | | | | | |
| 2-Wire Voice Grade Line Port Rates (Res) | | | | | | | | | | | | | | | | |
| | 2-Wire voice unbundled port - residence | | | UEPRX | UEPRL | 1.17 | 53.31 | 26.46 | 27.50 | 8.37 | | | | | | |
| | 2-Wire voice unbundled port with Caller ID - res | | | UEPRX | UEPRC | 1.17 | 53.31 | 26.46 | 27.50 | 8.37 | | | | | | |
| | 2-Wire voice unbundled port outgoing only - res | | | UEPRX | UEPRO | 1.17 | 53.31 | 26.46 | 27.50 | 8.37 | | | | | | |
| | 2-Wire voice unbundled Florida Area Calling with Caller ID - res | | | UEPRX | UEPAF | 1.17 | 53.31 | 26.46 | 27.50 | 8.37 | | | | | | |
| | 2-Wire voice unbundles res, low usage line port with Caller ID (LUM) | | | UEPRX | UEPAP | 1.17 | 53.31 | 26.46 | 27.50 | 8.37 | | | | | | |
| | 2-Wire voice unbundled Florida extended dialing with Caller ID | | | UEPRX | UEPA1 | 1.17 | 53.31 | 26.46 | 27.50 | 8.37 | | | | | | |
| | 2-Wire voice unbundled Florida extended dialing port without Caller ID capability | | | UEPRX | UEPA8 | 1.17 | 53.31 | 26.46 | 27.50 | 8.37 | | | | | | |
| | 2-Wire voice unbundled Florida Area Calling Port without Caller ID Capability | | | UEPRX | UEPA9 | 1.17 | 53.31 | 26.46 | 27.50 | 8.37 | | | | | | |
| | 2-Wire voice unbundled Low Usage Line Port without Caller ID Capability | | | UEPRX | UEPRT | 1.17 | 53.31 | 26.46 | 27.50 | 8.37 | | | | | | |
| FEATURES | | | | | | | | | | | | | | | | |
| | All Features Offered | | | UEPRX | UEPVF | 2.26 | 0.00 | 0.00 | | | | | | | | |
| LOCAL NUMBER PORTABILITY | | | | | | | | | | | | | | | | |
| | Local Number Portability (1 per port) | | | UEPRX | LNPCX | 0.35 | | | | | | | | | | |
| NONRECURRING CHARGES (NRCs) - CURRENTLY COMBINED | | | | | | | | | | | | | | | | |

| UNBUNDLED NETWORK ELEMENTS - Florida | | | | | | | | | | | | | | Attachment: 2 | | Exhibit: A | |
|---|---|---|---|---|---|---|---|---|---|---|---|---|---|---|---|---|---|
| CATEGORY | RATE ELEMENTS | Interim | Zone | BCS | USOC | RATES ($) | | | | | Svc Order Submitted Elec per LSR | Svc Order Submitted Manually per LSR | Incremental Charge - Manual Svc Order vs. Electronic-1st | Incremental Charge - Manual Svc Order vs. Electronic-Add'l | Incremental Charge - Manual Svc Order vs. Electronic-Disc 1st | Incremental Charge - Manual Svc Order vs. Electronic-Disc Add'l |
| | | | | | | Rec | Nonrecurring | | Nonrecurring Disconnect | | OSS Rates ($) | | | | | |
| | | | | | | | First | Add'l | First | Add'l | SOMEC | SOMAN | SOMAN | SOMAN | SOMAN | SOMAN |
| | 2-Wire Voice Grade Loop / Line Port Combination - Conversion - Switch-as-is | | | UEPRX | USAC2 | | 0.102 | 0.102 | | | | | | | | |
| | 2-Wire Voice Grade Loop / Line Port Combination - Conversion - Switch with change | | | UEPRX | USACC | | 0.102 | 0.102 | | | | | | | | |
| ADDITIONAL NRCs | | | | | | | | | | | | | | | | |
| | 2-Wire Voice Grade Loop/Line Port Combination - Subsequent Activity | | | UEPRX | USAS2 | 0.00 | 0.00 | 0.00 | | | | | | | | |
| | Unbundled Miscellaneous Rate Element, Tag Loop at End User Premise | | | UEPRX | URETL | | 8.33 | 0.83 | | | | | | | | |
| OFF/ON PREMISES EXTENSION CHANNELS | | | | | | | | | | | | | | | | |
| | 2 Wire Analog Voice Grade Extension Loop – Non-Design | | 1 | UEPRX | UEAEN | 10.69 | 49.57 | 22.83 | 25.62 | 6.57 | | | | | | |
| | 2 Wire Analog Voice Grade Extension Loop – Non-Design | | 2 | UEPRX | UEAEN | 15.20 | 49.57 | 22.83 | 25.62 | 6.57 | | | | | | |
| | 2 Wire Analog Voice Grade Extension Loop – Non-Design | | 3 | UEPRX | UEAEN | 26.97 | 49.57 | 22.83 | 25.62 | 6.57 | | | | | | |
| | 2 Wire Analog Voice Grade Extension Loop – Design | | 1 | UEPRX | UEAED | 12.24 | 135.75 | 82.47 | 63.53 | 12.01 | | | | | | |
| | 2 Wire Analog Voice Grade Extension Loop – Design | | 2 | UEPRX | UEAED | 17.40 | 135.75 | 82.47 | 63.53 | 12.01 | | | | | | |
| | 2 Wire Analog Voice Grade Extension Loop – Design | | 3 | UEPRX | UEAED | 30.87 | 135.75 | 82.47 | 63.53 | 12.01 | | | | | | |
| INTEROFFICE TRANSPORT | | | | | | | | | | | | | | | | |
| | Interoffice Transport - Dedicated - 2 Wire Voice Grade - Facility Termination | | | UEPRX | U1TV2 | 25.32 | 47.35 | 31.78 | | | | | | | | |
| | Interoffice Transport - Dedicated - 2 Wire Voice Grade - Per Mile or Fraction Mile | | | UEPRX | U1TVM | 0.0091 | 0.00 | 0.00 | | | | | | | | |
| 2-WIRE VOICE GRADE LOOP WITH 2-WIRE LINE PORT (BUS) | | | | | | | | | | | | | | | | |
| UNE Port/Loop Combination Rates | | | | | | | | | | | | | | | | |
| | 2-Wire VG Loop/Port Combo - Zone 1 | | 1 | | | 10.94 | | | | | | | | | | |
| | 2-Wire VG Loop/Port Combo - Zone 2 | | 2 | | | 15.05 | | | | | | | | | | |
| | 2-Wire VG Loop/Port Combo - Zone 3 | | 3 | | | 25.80 | | | | | | | | | | |
| UNE Loop Rates | | | | | | | | | | | | | | | | |
| | 2-Wire Voice Grade Loop (SL1) - Zone 1 | | 1 | UEPBX | UEPLX | 9.77 | | | | | | | | | | |
| | 2-Wire Voice Grade Loop (SL1) - Zone 2 | | 2 | UEPBX | UEPLX | 13.88 | | | | | | | | | | |
| | 2-Wire Voice Grade Loop (SL1) - Zone 3 | | 3 | UEPBX | UEPLX | 24.63 | | | | | | | | | | |
| 2-Wire Voice Grade Line Port (Bus) | | | | | | | | | | | | | | | | |
| | 2-Wire voice unbundled port without Caller ID - bus | | | UEPBX | UEPBL | 1.17 | 53.31 | 26.46 | 27.50 | 8.37 | | | | | | |
| | 2-Wire voice unbundled port with Caller + E484 ID - bus | | | UEPBX | UEPBC | 1.17 | 53.31 | 26.46 | 27.50 | 8.37 | | | | | | |
| | 2-Wire voice unbundled port outgoing only - bus | | | UEPBX | UEPBO | 1.17 | 53.31 | 26.46 | 27.50 | 8.37 | | | | | | |
| | 2-Wire voice unbundled incoming only port with Caller ID - Bus | | | UEPBX | UEPB1 | 1.17 | 53.31 | 26.46 | 27.50 | 8.37 | | | | | | |
| | 2-Wire voice unbundled Incoming Only Port without Caller ID Capability | | | UEPBX | UEPBE | 1.17 | 53.31 | 26.46 | 27.50 | 8.37 | | | | | | |
| LOCAL NUMBER PORTABILITY | | | | | | | | | | | | | | | | |
| | Local Number Portability (1 per port) | | | UEPBX | LNPCX | 0.35 | | | | | | | | | | |
| FEATURES | | | | | | | | | | | | | | | | |
| | All Features Offered | | | UEPBX | UEPVF | 2.26 | 0.00 | 0.00 | | | | | | | | |
| NONRECURRING CHARGES (NRCs) - CURRENTLY COMBINED | | | | | | | | | | | | | | | | |
| | 2-Wire Voice Grade Loop / Line Port Combination - Conversion - Switch-as-is | | | UEPBX | USAC2 | | 0.102 | 0.102 | | | | | | | | |
| | 2-Wire Voice Grade Loop / Line Port Combination - Conversion - Switch with change | | | UEPBX | USACC | | 0.102 | 0.102 | | | | | | | | |
| ADDITIONAL NRCs | | | | | | | | | | | | | | | | |
| | 2-Wire Voice Grade Loop/Line Port Combination - Subsequent Activity | | | UEPBX | USAS2 | | 0.00 | 0.00 | | | | | | | | |
| | Unbundled Miscellaneous Rate Element, Tag Loop at End User Premise | | | UEPBX | URETL | | 8.33 | 0.83 | | | | | | | | |
| OFF/ON PREMISES EXTENSION CHANNELS | | | | | | | | | | | | | | | | |
| | 2 Wire Analog Voice Grade Extension Loop – Non-Design | | 1 | UEPBX | UEAEN | 10.69 | 49.57 | 22.83 | 25.62 | 6.57 | | | | | | |
| | 2 Wire Analog Voice Grade Extension Loop – Non-Design | | 2 | UEPBX | UEAEN | 15.20 | 49.57 | 22.83 | 25.62 | 6.57 | | | | | | |
| | 2 Wire Analog Voice Grade Extension Loop – Non-Design | | 3 | UEPBX | UEAEN | 26.97 | 49.57 | 22.83 | 25.62 | 6.57 | | | | | | |
| | 2 Wire Analog Voice Grade Extension Loop – Design | | 1 | UEPBX | UEAED | 12.24 | 135.75 | 82.47 | 63.53 | 12.01 | | | | | | |
| | 2 Wire Analog Voice Grade Extension Loop – Design | | 2 | UEPBX | UEAED | 17.40 | 135.75 | 82.47 | 63.53 | 12.01 | | | | | | |
| | 2 Wire Analog Voice Grade Extension Loop – Design | | 3 | UEPBX | UEAED | 30.87 | 135.75 | 82.47 | 63.53 | 12.01 | | | | | | |
| INTEROFFICE TRANSPORT | | | | | | | | | | | | | | | | |

CCCS 186 of 1253

| UNBUNDLED NETWORK ELEMENTS - Florida | | | | | | | | | | | | | | Attachment: 2 | | Exhibit: A | |
|---|---|---|---|---|---|---|---|---|---|---|---|---|---|---|---|---|---|
| CATEGORY | | RATE ELEMENTS | Interim | Zone | BCS | USOC | RATES ($) | | | | | Svc Order Submitted Elec per LSR | Svc Order Submitted Manually per LSR | Incremental Charge - Manual Svc Order vs. Electronic-1st | Incremental Charge - Manual Svc Order vs. Electronic-Add'l | Incremental Charge - Manual Svc Order vs. Electronic-Disc 1st | Incremental Charge - Manual Svc Order vs. Electronic-Disc Add'l |
| | | | | | | | Rec | Nonrecurring | | Nonrecurring Disconnect | | OSS Rates ($) | | | | | |
| | | | | | | | | First | Add'l | First | Add'l | SOMEC | SOMAN | SOMAN | SOMAN | SOMAN | SOMAN |
| | | Interoffice Transport - Dedicated - 2 Wire Voice Grade - Facility Termination | | | UEPBX | U1TV2 | 25.32 | 47.35 | 31.78 | | | | | | | | |
| | | Interoffice Transport - Dedicated - 2 Wire Voice Grade - Per Mile or Fraction Mile | | | UEPBX | U1TVM | 0.0091 | 0.00 | 0.00 | | | | | | | | |
| | **2-WIRE VOICE GRADE LOOP WITH 2-WIRE LINE PORT (RES - PBX)** | | | | | | | | | | | | | | | | |
| | **UNE Port/Loop Combination Rates** | | | | | | | | | | | | | | | | |
| | | 2-Wire VG Loop/Port Combo - Zone 1 | | 1 | | | 10.94 | | | | | | | | | | |
| | | 2-Wire VG Loop/Port Combo - Zone 2 | | 2 | | | 15.05 | | | | | | | | | | |
| | | 2-Wire VG Loop/Port Combo - Zone 3 | | 3 | | | 25.80 | | | | | | | | | | |
| | **UNE Loop Rates** | | | | | | | | | | | | | | | | |
| | | 2-Wire Voice Grade Loop (SL 1) - Zone 1 | | 1 | UEPRG | UEPLX | 9.77 | | | | | | | | | | |
| | | 2-Wire Voice Grade Loop (SL 1) - Zone 2 | | 2 | UEPRG | UEPLX | 13.88 | | | | | | | | | | |
| | | 2-Wire Voice Grade Loop (SL 1) - Zone 3 | | 3 | UEPRG | UEPLX | 24.63 | | | | | | | | | | |
| | **2-Wire Voice Grade Line Port Rates (RES - PBX)** | | | | | | | | | | | | | | | | |
| | | 2-Wire VG Unbundled Combination 2-Way PBX Trunk Port - Res | | | UEPRG | UEPRD | 1.17 | 174.81 | 100.65 | 75.88 | 12.73 | | | | | | |
| | **LOCAL NUMBER PORTABILITY** | | | | | | | | | | | | | | | | |
| | | Local Number Portability (1 per port) | | | UEPRG | LNPCP | 3.15 | 0.00 | 0.00 | | | | | | | | |
| | **FEATURES** | | | | | | | | | | | | | | | | |
| | | All Features Offered | | | UEPRG | UEPVF | 2.26 | 0.00 | 0.00 | | | | | | | | |
| | **NONRECURRING CHARGES (NRCs) - CURRENTLY COMBINED** | | | | | | | | | | | | | | | | |
| | | 2-Wire Voice Grade Loop/ Line Port Combination (PBX) - Conversion - Switch-As-Is | | | UEPRG | USAC2 | | 8.45 | 1.91 | | | | | | | | |
| | | 2-Wire Voice Grade Loop/ Line Port Combination (PBX) - Conversion - Switch with Change | | | UEPRG | USACC | | 8.45 | 1.91 | | | | | | | | |
| | **ADDITIONAL NRCs** | | | | | | | | | | | | | | | | |
| | | 2-Wire Voice Grade Loop/ Line Port Combination (PBX) - Subsequent Activity | | | UEPRG | USAS2 | 0.00 | 0.00 | 0.00 | | | | | | | | |
| | | PBX Subsequent Activity - Change/Rearrange Multiline Hunt Group | | | | | | 7.86 | 7.86 | | | | | | | | |
| | | Unbundled Miscellaneous Rate Element, Tag Loop at End User Premise | | | UEPRG | URETL | | 8.33 | 0.83 | | | | | | | | |
| | **OFF/ON PREMISES EXTENSION CHANNELS** | | | | | | | | | | | | | | | | |
| | | Local Channel Voice grade, per termination | | 1 | UEPRG | P2JHX | 12.24 | 135.75 | 82.47 | 63.53 | 12.01 | | | | | | |
| | | Local Channel Voice grade, per termination | | 2 | UEPRG | P2JHX | 17.40 | 135.75 | 82.47 | 63.53 | 12.01 | | | | | | |
| | | Local Channel Voice grade, per termination | | 3 | UEPRG | P2JHX | 30.87 | 135.75 | 82.47 | 63.53 | 12.01 | | | | | | |
| | | Non-Wire Direct Serve Channel Voice Grade | | 1 | UEPRG | SDD2X | 12.92 | 120.38 | 43.56 | 95.00 | 10.54 | | | | | | |
| | | Non-Wire Direct Serve Channel Voice Grade | | 2 | UEPRG | SDD2X | 18.36 | 120.38 | 43.56 | 95.00 | 10.54 | | | | | | |
| | | Non-Wire Direct Serve Channel Voice Grade | | 3 | UEPRG | SDD2X | 32.58 | 120.38 | 43.56 | 95.00 | 10.54 | | | | | | |
| | **INTEROFFICE TRANSPORT** | | | | | | | | | | | | | | | | |
| | | Interoffice Transport - Dedicated - 2 Wire Voice Grade - Facility Termination | | | UEPRG | U1TV2 | 25.32 | 47.35 | 31.78 | | | | | | | | |
| | | Interoffice Transport - Dedicated - 2 Wire Voice Grade - Per Mile or Fraction Mile | | | UEPRG | U1TVM | 0.0091 | 0.00 | 0.00 | | | | | | | | |
| | **2-WIRE VOICE GRADE LOOP WITH 2-WIRE LINE PORT (BUS - PBX)** | | | | | | | | | | | | | | | | |
| | **UNE Port/Loop Combination Rates** | | | | | | | | | | | | | | | | |
| | | 2-Wire VG Loop/Port Combo - Zone 1 | | 1 | | | 10.94 | | | | | | | | | | |
| | | 2-Wire VG Loop/Port Combo - Zone 2 | | 2 | | | 15.05 | | | | | | | | | | |
| | | 2-Wire VG Loop/Port Combo - Zone 3 | | 3 | | | 25.80 | | | | | | | | | | |
| | **UNE Loop Rates** | | | | | | | | | | | | | | | | |
| | | 2-Wire Voice Grade Loop (SL 1) - Zone 1 | | 1 | UEPPX | UEPLX | 9.77 | | | | | | | | | | |
| | | 2-Wire Voice Grade Loop (SL 1) - Zone 2 | | 2 | UEPPX | UEPLX | 13.88 | | | | | | | | | | |
| | | 2-Wire Voice Grade Loop (SL 1) - Zone 3 | | 3 | UEPPX | UEPLX | 24.63 | | | | | | | | | | |
| | **2-Wire Voice Grade Line Port Rates (BUS - PBX)** | | | | | | | | | | | | | | | | |
| | | Line Side Unbundled Combination 2-Way PBX Trunk Port - Bus | | | UEPPX | UEPPC | 1.17 | 174.81 | 100.65 | 75.88 | 12.73 | | | | | | |
| | | Line Side Unbundled Outward PBX Trunk Port - Bus | | | UEPPX | UEPPO | 1.17 | 174.81 | 100.65 | 75.88 | 12.73 | | | | | | |
| | | Line Side Unbundled Incoming PBX Trunk Port - Bus | | | UEPPX | UEPP1 | 1.17 | 174.81 | 100.65 | 75.88 | 12.73 | | | | | | |
| | | 2-Wire Voice Unbundled PBX LD Terminal Ports | | | UEPPX | UEPLD | 1.17 | 174.81 | 100.65 | 75.88 | 12.73 | | | | | | |

## UNBUNDLED NETWORK ELEMENTS - Florida

| CATEGORY | RATE ELEMENTS | Interim | Zone | BCS | USOC | RATES ($) | | | | | Svc Order Submitted Elec per LSR | Svc Order Submitted Manually per LSR | Attachment: 2 | | Exhibit: A | |
|---|---|---|---|---|---|---|---|---|---|---|---|---|---|---|---|---|
| | | | | | | | | | | | | | Incremental Charge - Manual Svc Order vs. Electronic-1st | Incremental Charge - Manual Svc Order vs. Electronic-Add'l | Incremental Charge - Manual Svc Order vs. Electronic-Disc 1st | Incremental Charge - Manual Svc Order vs. Electronic-Disc Add'l |
| | | | | | | Rec | Nonrecurring | | Nonrecurring Disconnect | | OSS Rates ($) | | | | | |
| | | | | | | | First | Add'l | First | Add'l | SOMEC | SOMAN | SOMAN | SOMAN | SOMAN | SOMAN |
| | 2-Wire Voice Unbundled 2-Way Combination PBX Usage Port | | | UEPPX | UEPXA | 1.17 | 174.81 | 100.65 | 75.88 | 12.73 | | | | | | |
| | 2-Wire Voice Unbundled PBX Toll Terminal Hotel Ports | | | UEPPX | UEPXB | 1.17 | 174.81 | 100.65 | 75.88 | 12.73 | | | | | | |
| | 2-Wire Voice Unbundled PBX LD DDD Terminals Port | | | UEPPX | UEPXC | 1.17 | 174.81 | 100.65 | 75.88 | 12.73 | | | | | | |
| | 2-Wire Voice Unbundled PBX LD Terminal Switchboard Port | | | UEPPX | UEPXD | 1.17 | 174.81 | 100.65 | 75.88 | 12.73 | | | | | | |
| | 2-Wire Voice Unbundled PBX LD Terminal Switchboard IDD Capable Port | | | UEPPX | UEPXE | 1.17 | 174.81 | 100.65 | 75.88 | 12.73 | | | | | | |
| | 2-Wire Voice Unbundled 2-Way PBX Hotel/Hospital Economy Administrative Calling Port | | | UEPPX | UEPXL | 1.17 | 174.81 | 100.65 | 75.88 | 12.73 | | | | | | |
| | 2-Wire Voice Unbundled 2-Way PBX Hotel/Hospital Economy Room Calling Port | | | UEPPX | UEPXM | 1.17 | 174.81 | 100.65 | 75.88 | 12.73 | | | | | | |
| | 2-Wire Voice Unbundled 1-Way Outgoing PBX Hotel/Hospital Discount Room Calling Port | | | UEPPX | UEPXO | 1.17 | 174.81 | 100.65 | 75.88 | 12.73 | | | | | | |
| | 2-Wire Voice Unbundled 1-Way Outgoing PBX Measured Port | | | UEPPX | UEPXS | 1.17 | 174.81 | 100.65 | 75.88 | 12.73 | | | | | | |
| **LOCAL NUMBER PORTABILITY** | | | | | | | | | | | | | | | | |
| | Local Number Portability (1 per port) | | | UEPPX | LNPCP | 3.15 | 0.00 | 0.00 | | | | | | | | |
| **FEATURES** | | | | | | | | | | | | | | | | |
| | All Features Offered | | | UEPPX | UEPVF | 2.26 | 0.00 | 0.00 | | | | | | | | |
| **NONRECURRING CHARGES (NRCs) - CURRENTLY COMBINED** | | | | | | | | | | | | | | | | |
| | 2-Wire Voice Grade Loop/ Line Port Combination (PBX) - Conversion - Switch-As-Is | | | UEPPX | USAC2 | | 8.45 | 1.91 | | | | | | | | |
| | 2-Wire Voice Grade Loop/ Line Port Combination (PBX) - Conversion - Switch with Change | | | UEPPX | USACC | | 8.45 | 1.91 | | | | | | | | |
| **ADDITIONAL NRCs** | | | | | | | | | | | | | | | | |
| | 2-Wire Voice Grade Loop/ Line Port Combination (PBX) - Subsequent Activity | | | UEPPX | USAS2 | 0.00 | 0.00 | 0.00 | | | | | | | | |
| | PBX Subsequent Activity - Change/Rearrange Multiline Hunt Group | | | | | | 7.86 | 7.86 | | | | | | | | |
| | Unbundled Miscellaneous Rate Element, Tag Loop at End User Premise | | | UEPPX | URETL | | 8.33 | 0.83 | | | | | | | | |
| **OFF/ON PREMISES EXTENSION CHANNELS** | | | | | | | | | | | | | | | | |
| | Local Channel Voice grade, per termination | | 1 | UEPPX | P2JHX | 12.24 | 135.75 | 82.47 | 63.53 | 12.01 | | | | | | |
| | Local Channel Voice grade, per termination | | 2 | UEPPX | P2JHX | 17.40 | 135.75 | 82.47 | 63.53 | 12.01 | | | | | | |
| | Local Channel Voice grade, per termination | | 3 | UEPPX | P2JHX | 30.87 | 135.75 | 82.47 | 63.53 | 12.01 | | | | | | |
| | Non-Wire Direct Serve Channel Voice Grade | | 1 | UEPPX | SDD2X | 12.92 | 120.38 | 43.56 | 95.00 | 10.54 | | | | | | |
| | Non-Wire Direct Serve Channel Voice Grade | | 2 | UEPPX | SDD2X | 18.36 | 120.38 | 43.56 | 95.00 | 10.54 | | | | | | |
| | Non-Wire Direct Serve Channel Voice Grade | | 3 | UEPPX | SDD2X | 32.58 | 120.38 | 43.56 | 95.00 | 10.54 | | | | | | |
| **INTEROFFICE TRANSPORT** | | | | | | | | | | | | | | | | |
| | Interoffice Transport - Dedicated - 2 Wire Voice Grade - Facility Termination | | | UEPPX | U1TV2 | 25.32 | 47.35 | 31.78 | | | | | | | | |
| | Interoffice Transport - Dedicated - 2 Wire Voice Grade - Per Mile or Fraction Mile | | | UEPPX | U1TVM | 0.0091 | 0.00 | 0.00 | | | | | | | | |
| **2-WIRE VOICE GRADE LOOP WITH 2-WIRE ANALOG LINE COIN PORT** | | | | | | | | | | | | | | | | |
| **UNE Port/Loop Combination Rates** | | | | | | | | | | | | | | | | |
| | 2-Wire VG Coin Port/Loop Combo – Zone 1 | | 1 | | | 10.94 | | | | | | | | | | |
| | 2-Wire VG Coin Port/Loop Combo – Zone 2 | | 2 | | | 15.05 | | | | | | | | | | |
| | 2-Wire VG Coin Port/Loop Combo – Zone 3 | | 3 | | | 25.80 | | | | | | | | | | |
| **UNE Loop Rates** | | | | | | | | | | | | | | | | |
| | 2-Wire Voice Grade Loop (SL1) - Zone 1 | | 1 | UEPCO | UEPLX | 9.77 | | | | | | | | | | |
| | 2-Wire Voice Grade Loop (SL1) - Zone 2 | | 2 | UEPCO | UEPLX | 13.88 | | | | | | | | | | |
| | 2-Wire Voice Grade Loop (SL1) - Zone 3 | | 3 | UEPCO | UEPLX | 24.63 | | | | | | | | | | |
| **2-Wire Voice Grade Line Ports (COIN)** | | | | | | | | | | | | | | | | |
| | 2-Wire Coin 2-Way with Operator Screening and Blocking: 011, 900/976, 1+DDD (FL) | | | UEPCO | UEP2F | 1.17 | 53.31 | 26.46 | 27.50 | 8.37 | | | | | | |
| | 2-Wire Coin 2-Way with Operator Screening and 011 Blocking (FL) | | | UEPCO | UEPFA | 1.17 | 53.31 | 26.46 | 27.50 | 8.37 | | | | | | |
| | 2-Wire Coin 2-Way with Operator Screening and Blocking: 900/976, 1+DDD, 011+, and Local (FL) | | | UEPCO | UEPCG | 1.17 | 53.31 | 26.46 | 27.50 | 8.37 | | | | | | |
| | 2-Wire Coin Outward with Operator Screening and 011 Blocking (AL, FL) | | | UEPCO | UEPRK | 1.17 | 53.31 | 26.46 | 27.50 | 8.37 | | | | | | |

| UNBUNDLED NETWORK ELEMENTS - Florida | | | | | | | | | | | | | | Attachment: 2 | | Exhibit: A | |
|---|---|---|---|---|---|---|---|---|---|---|---|---|---|---|---|---|---|
| CATEGORY | RATE ELEMENTS | Interim | Zone | BCS | USOC | RATES ($) | | | | | Svc Order Submitted Elec per LSR | Svc Order Submitted Manually per LSR | Incremental Charge - Manual Svc Order vs. Electronic-1st | Incremental Charge - Manual Svc Order vs. Electronic-Add'l | Incremental Charge - Manual Svc Order vs. Electronic-Disc 1st | Incremental Charge - Manual Svc Order vs. Electronic-Disc Add'l |
| | | | | | | Rec | Nonrecurring | | Nonrecurring Disconnect | | OSS Rates ($) | | | | | |
| | | | | | | | First | Add'l | First | Add'l | SOMEC | SOMAN | SOMAN | SOMAN | SOMAN | SOMAN |
| | 2-Wire Coin Outward with Operator Screening and Blocking: 900/976, 1+DDD, 011+ (FL) | | | UEPCO | UEPOF | 1.17 | 53.31 | 26.46 | 27.50 | 8.37 | | | | | | |
| | 2-Wire Coin Outward with Operator Screening and Blocking: 900/976, 1+DDD, 011+, and Local (FL, GA) | | | UEPCO | UEPCQ | 1.17 | 53.31 | 26.46 | 27.50 | 8.37 | | | | | | |
| | 2-Wire 2-Way Smartline with 900/976 (all states except LA) | | | UEPCO | UEPCK | 1.17 | 53.31 | 26.46 | 27.50 | 8.37 | | | | | | |
| | 2-Wire Coin Outward Smartline with 900/976 (all states except LA) | | | UEPCO | UEPCR | 1.17 | 53.31 | 26.46 | 27.50 | 8.37 | | | | | | |
| | **ADDITIONAL UNE COIN PORT/LOOP (RC)** | | | | | | | | | | | | | | | |
| | UNE Coin Port/Loop Combo Usage (Flat Rate) | | | UEPCO | URECU | 1.86 | 0.00 | 0.00 | 0.00 | 0.00 | | | | | | |
| | **LOCAL NUMBER PORTABILITY** | | | | | | | | | | | | | | | |
| | Local Number Portability (1 per port) | | | UEPCO | LNPCX | 0.35 | | | | | | | | | | |
| | **NONRECURRING CHARGES - CURRENTLY COMBINED** | | | | | | | | | | | | | | | |
| | 2-Wire Voice Grade Loop / Line Port Combination - Conversion - Switch-as-is | | | UEPCO | USAC2 | | 0.102 | 0.102 | | | | | | | | |
| | 2-Wire Voice Grade Loop / Line Port Combination - Conversion - Switch with change | | | UEPCO | USACC | | 0.102 | 0.102 | | | | | | | | |
| | **ADDITIONAL NRCs** | | | | | | | | | | | | | | | |
| | 2-Wire Voice Grade Loop/Line Port Combination - Subsequent Activity | | | UEPCO | USAS2 | | 0.00 | 0.00 | | | | | | | | |
| | Unbundled Miscellaneous Rate Element, Tag Loop at End User Premise | | | UEPCO | URETL | | 8.33 | 0.83 | | | | | | | | |
| | **2-WIRE VOICE LOOP/ 2WIRE VOICE GRADE IO TRANSPORT/ 2-WIRE LINE PORT (RES)** | | | | | | | | | | | | | | | |
| | **UNE Port/Loop Combination Rates** | | | | | | | | | | | | | | | |
| | 2-Wire VG Loop/IO Tranport/Port Combo - Zone 1 | | 1 | | | 13.64 | | | | | | | | | | |
| | 2-Wire VG Loop/IO Tranport/Port Combo - Zone 2 | | 2 | | | 18.80 | | | | | | | | | | |
| | 2-Wire VG Loop/IO Tranport/Port Combo - Zone 3 | | 3 | | | 32.27 | | | | | | | | | | |
| | **UNE Loop Rates** | | | | | | | | | | | | | | | |
| | 2-Wire Voice Grade Loop (SL2) - Zone 1 | | 1 | UEPFR | UECF2 | 12.24 | | | | | | | | | | |
| | 2-Wire Voice Grade Loop (SL2) - Zone 2 | | 2 | UEPFR | UECF2 | 17.40 | | | | | | | | | | |
| | 2-Wire Voice Grade Loop (SL2) - Zone 3 | | 3 | UEPFR | UECF2 | 30.87 | | | | | | | | | | |
| | **2-Wire Voice Grade Line Port Rates (Res)** | | | | | | | | | | | | | | | |
| | 2-Wire voice unbundled port - residence | | | UEPFR | UEPRL | 1.40 | 174.81 | 100.65 | 75.88 | 12.73 | | | | | | |
| | 2-Wire voice unbundled port with Caller ID - res | | | UEPFR | UEPRC | 1.40 | 174.81 | 100.65 | 75.88 | 12.73 | | | | | | |
| | 2-Wire voice unbundled port outgoing only - res | | | UEPFR | UEPRO | 1.40 | 174.81 | 100.65 | 75.88 | 12.73 | | | | | | |
| | 2-Wire voice unbundled Florida Area Calling with Caller ID - res | | | UEPFR | UEPAF | 1.40 | 174.81 | 100.65 | 75.88 | 12.73 | | | | | | |
| | 2-Wire voice unbundles res, low usage line port with Caller ID (LUM) | | | UEPFR | UEPAP | 1.40 | 174.81 | 100.65 | 75.88 | 12.73 | | | | | | |
| | **INTEROFFICE TRANSPORT** | | | | | | | | | | | | | | | |
| | Interoffice Transport - Dedicated - 2 Wire Voice Grade - Facility Termination | | | UEPFR | U1TV2 | 25.32 | 47.35 | 31.78 | | | | | | | | |
| | Interoffice Transport - Dedicated - 2 Wire Voice Grade - Per Mile or Fraction Mile | | | UEPFR | 1L5XX | 0.0091 | | | | | | | | | | |
| | **FEATURES** | | | | | | | | | | | | | | | |
| | All Features Offered | | | UEPFR | UEPVF | 2.26 | 0.00 | 0.00 | | | | | | | | |
| | **LOCAL NUMBER PORTABILITY** | | | | | | | | | | | | | | | |
| | Local Number Portability (1 per port) | | | UEPFR | LNPCX | 0.35 | | | | | | | | | | |
| | **NONRECURRING CHARGES (NRCs) - CURRENTLY COMBINED** | | | | | | | | | | | | | | | |
| | 2-Wire Loop / Dedicated IO Transport / 2 Wire Line Port Combination - Conversion - Switch-as-is | | | UEPFR | USAC2 | | 16.97 | 3.73 | | | | | | | | |
| | 2-Wire Loop / Dedicated IO Transport / 2 Wire Line Port Combination - Conversion - Switch-With-Change | | | UEPFR | USACC | | 16.97 | 3.73 | | | | | | | | |
| | Unbundled Miscellaneous Rate Element, Tag Designed Loop at End User Premise | | | UEPFR | URETN | | 11.21 | 1.10 | | | | | | | | |
| | **2-WIRE VOICE LOOP/ 2WIRE VOICE GRADE IO TRANSPORT/ 2-WIRE LINE PORT (BUS)** | | | | | | | | | | | | | | | |
| | **UNE Port/Loop Combination Rates** | | | | | | | | | | | | | | | |
| | 2-Wire VG Loop/IO Tranport/Port Combo - Zone 1 | | 1 | | | 13.64 | | | | | | | | | | |
| | 2-Wire VG Loop/IO Tranport/Port Combo - Zone 2 | | 2 | | | 18.80 | | | | | | | | | | |
| | 2-Wire VG Loop/IO Tranport/Port Combo - Zone 3 | | 3 | | | 32.27 | | | | | | | | | | |

| UNBUNDLED NETWORK ELEMENTS - Florida | | | | | | | | | | | | | | Attachment: 2 | | Exhibit: A | |
|---|---|---|---|---|---|---|---|---|---|---|---|---|---|---|---|---|---|
| CATEGORY | RATE ELEMENTS | Interim | Zone | BCS | USOC | RATES ($) | | | | | Svc Order Submitted Elec per LSR | Svc Order Submitted Manually per LSR | Incremental Charge - Manual Svc Order vs. Electronic-1st | Incremental Charge - Manual Svc Order vs. Electronic-Add'l | Incremental Charge - Manual Svc Order vs. Electronic-Disc 1st | Incremental Charge - Manual Svc Order vs. Electronic-Disc Add'l |
| | | | | | | Rec | Nonrecurring | | Nonrecurring Disconnect | | OSS Rates ($) | | | | | |
| | | | | | | | First | Add'l | First | Add'l | SOMEC | SOMAN | SOMAN | SOMAN | SOMAN | SOMAN |
| UNE Loop Rates | | | | | | | | | | | | | | | | |
| | 2-Wire Voice Grade Loop (SL2) - Zone 1 | | 1 | UEPFB | UECF2 | 12.24 | | | | | | | | | | |
| | 2-Wire Voice Grade Loop (SL2) - Zone 2 | | 2 | UEPFB | UECF2 | 17.40 | | | | | | | | | | |
| | 2-Wire Voice Grade Loop (SL2) - Zone 3 | | 3 | UEPFB | UECF2 | 30.87 | | | | | | | | | | |
| 2-Wire Voice Grade Line Port (Bus) | | | | | | | | | | | | | | | | |
| | 2-Wire voice unbundled port without Caller ID - bus | | | UEPFB | UEPBL | 1.40 | 174.81 | 100.65 | 75.88 | 12.73 | | | | | | |
| | 2-Wire voice unbundled port with Caller + E484 ID - bus | | | UEPFB | UEPBC | 1.40 | 174.81 | 100.65 | 75.88 | 12.73 | | | | | | |
| | 2-Wire voice unbundled port outgoing only - bus | | | UEPFB | UEPBO | 1.40 | 174.81 | 100.65 | 75.88 | 12.73 | | | | | | |
| | 2-Wire voice unbundled incoming only port with Caller ID - Bus | | | UEPFB | UEPB1 | 1.40 | 174.81 | 100.65 | 75.88 | 12.73 | | | | | | |
| LOCAL NUMBER PORTABILITY | | | | | | | | | | | | | | | | |
| | Local Number Portability (1 per port) | | | UEPFB | LNPCX | 0.35 | | | | | | | | | | |
| INTEROFFICE TRANSPORT | | | | | | | | | | | | | | | | |
| | Interoffice Transport - Dedicated - 2 Wire Voice Grade - Facility Termination | | | UEPFB | U1TV2 | 25.32 | 47.35 | 31.78 | | | | | | | | |
| | Interoffice Transport - Dedicated - 2 Wire Voice Grade - Per Mile or Fraction Mile | | | UEPFB | 1L5XX | 0.0091 | | | | | | | | | | |
| FEATURES | | | | | | | | | | | | | | | | |
| | All Features Offered | | | UEPFB | UEPVF | 2.26 | 0.00 | 0.00 | | | | | | | | |
| NONRECURRING CHARGES (NRCs) - CURRENTLY COMBINED | | | | | | | | | | | | | | | | |
| | 2-Wire Loop / Dedicated IO Transport / 2 Wire Line Port Combination - Conversion - Switch-as-is | | | UEPFB | USAC2 | | 16.97 | 3.73 | | | | | | | | |
| | 2-Wire Loop / Dedicated IO Transport / 2 Wire Line Port Combination - Conversion - Switch with change | | | UEPFB | USACC | | 16.97 | 3.73 | | | | | | | | |
| | Unbundled Miscellaneous Rate Element, Tag Designed Loop at End User Premise | | | UEPFB | URETN | | 11.21 | 1.10 | | | | | | | | |
| 2-WIRE VOICE LOOP/ 2WIRE VOICE GRADE IO TRANSPORT/ 2-WIRE LINE PORT (PBX) | | | | | | | | | | | | | | | | |
| UNE Port/Loop Combination Rates | | | | | | | | | | | | | | | | |
| | 2-Wire VG Loop/IO Tranport/Port Combo - Zone 1 | | 1 | | | 13.64 | | | | | | | | | | |
| | 2-Wire VG Loop/IO Tranport/Port Combo - Zone 2 | | 2 | | | 18.80 | | | | | | | | | | |
| | 2-Wire VG Loop/IO Tranport/Port Combo - Zone 3 | | 3 | | | 32.27 | | | | | | | | | | |
| UNE Loop Rates | | | | | | | | | | | | | | | | |
| | 2-Wire Voice Grade Loop (SL2) - Zone 1 | | 1 | UEPFP | UECF2 | 12.24 | | | | | | | | | | |
| | 2-Wire Voice Grade Loop (SL2) - Zone 2 | | 2 | UEPFP | UECF2 | 17.40 | | | | | | | | | | |
| | 2-Wire Voice Grade Loop (SL2) - Zone 3 | | 3 | UEPFP | UECF2 | 30.87 | | | | | | | | | | |
| 2-Wire Voice Grade Line Port Rates (BUS - PBX) | | | | | | | | | | | | | | | | |
| | Line Side Unbundled Combination 2-Way PBX Trunk Port - Bus | | | UEPFP | UEPPC | 1.40 | 174.81 | 100.65 | 75.88 | 12.73 | | | | | | |
| | Line Side Unbundled Outward PBX Trunk Port - Bus | | | UEPFP | UEPPO | 1.40 | 174.81 | 100.65 | 75.88 | 12.73 | | | | | | |
| | Line Side Unbundled Incoming PBX Trunk Port - Bus | | | UEPFP | UEPP1 | 1.40 | 174.81 | 100.65 | 75.88 | 12.73 | | | | | | |
| | 2-Wire Voice Unbundled PBX LD Terminal Ports | | | UEPFP | UEPLD | 1.40 | 174.81 | 100.65 | 75.88 | 12.73 | | | | | | |
| | 2-Wire Voice Unbundled 2-Way Combination PBX Usage Port | | | UEPFP | UEPXA | 1.40 | 174.81 | 100.65 | 75.88 | 12.73 | | | | | | |
| | 2-Wire Voice Unbundled PBX Toll Terminal Hotel Ports | | | UEPFP | UEPXB | 1.40 | 174.81 | 100.65 | 75.88 | 12.73 | | | | | | |
| | 2-Wire Voice Unbundled PBX LD DDD Terminals Port | | | UEPFP | UEPXC | 1.40 | 174.81 | 100.65 | 75.88 | 12.73 | | | | | | |
| | 2-Wire Voice Unbundled PBX LD Terminal Switchboard Port | | | UEPFP | UEPXD | 1.40 | 174.81 | 100.65 | 75.88 | 12.73 | | | | | | |
| | 2-Wire Voice Unbundled PBX LD Terminal Switchboard IDD Capable Port | | | UEPFP | UEPXE | 1.40 | 174.81 | 100.65 | 75.88 | 12.73 | | | | | | |
| | 2-Wire Voice Unbundled 2-Way PBX Hotel/Hospital Economy Administrative Calling Port | | | UEPFP | UEPXL | 1.40 | 174.81 | 100.65 | 75.88 | 12.73 | | | | | | |
| | 2-Wire Voice Unbundled 2-Way PBX Hotel/Hospital Economy Room Calling Port | | | UEPFP | UEPXM | 1.40 | 174.81 | 100.65 | 75.88 | 12.73 | | | | | | |
| | 2-Wire Voice Unbundled 1-Way Outgoing PBX Hotel/Hospital Discount Room Calling Port | | | UEPFP | UEPXO | 1.40 | 174.81 | 100.65 | 75.88 | 12.73 | | | | | | |
| | 2-Wire Voice Unbundled 1-Way Outgoing PBX Measured Port | | | UEPFP | UEPXS | 1.40 | 174.81 | 100.65 | 75.88 | 12.73 | | | | | | |
| LOCAL NUMBER PORTABILITY | | | | | | | | | | | | | | | | |
| | Local Number Portability (1 per port) | | | UEPFP | LNPCP | 3.15 | 0.00 | 0.00 | | | | | | | | |
| INTEROFFICE TRANSPORT | | | | | | | | | | | | | | | | |
| | Interoffice Transport - Dedicated - 2 Wire Voice Grade - Facility Termination | | | UEPFP | U1TV2 | 25.32 | 47.35 | 31.78 | | | | | | | | |

| UNBUNDLED NETWORK ELEMENTS - Florida | | | | | | | | | | | | | | Attachment: 2 | | Exhibit: A | |
|---|---|---|---|---|---|---|---|---|---|---|---|---|---|---|---|---|---|
| CATEGORY | RATE ELEMENTS | Interim | Zone | BCS | USOC | RATES ($) | | | | | Svc Order Submitted Elec per LSR | Svc Order Submitted Manually per LSR | Incremental Charge - Manual Svc Order vs. Electronic-1st | Incremental Charge - Manual Svc Order vs. Electronic-Add'l | Incremental Charge - Manual Svc Order vs. Electronic-Disc 1st | Incremental Charge - Manual Svc Order vs. Electronic-Disc Add'l |
| | | | | | | Rec | Nonrecurring | | Nonrecurring Disconnect | | OSS Rates ($) | | | | | |
| | | | | | | | First | Add'l | First | Add'l | SOMEC | SOMAN | SOMAN | SOMAN | SOMAN | SOMAN |
| | Interoffice Transport - Dedicated - 2 Wire Voice Grade - Per Mile or Fraction Mile | | | UEPFP | 1L5XX | 0.0091 | | | | | | | | | | |
| FEATURES | | | | | | | | | | | | | | | | |
| | All Features Offered | | | UEPFP | UEPVF | 2.26 | 0.00 | 0.00 | | | | | | | | |
| NONRECURRING CHARGES (NRCs) - CURRENTLY COMBINED | | | | | | | | | | | | | | | | |
| | 2-Wire Loop / Dedicated IO Transport / 2 Wire Line Port Combination - Conversion - Switch-as-is | | | UEPFP | USAC2 | | 16.97 | 3.73 | | | | | | | | |
| | 2-Wire Loop / Dedicated IO Transport / 2 Wire Line Port Combination - Conversion - Switch with change | | | UEPFP | USACC | | 16.97 | 3.73 | | | | | | | | |
| | Unbundled Miscellaneous Rate Element, Tag Designed Loop at End User Premise | | | UEPFP | URETN | | 11.21 | 1.10 | | | | | | | | |
| UNBUNDLED PORT/LOOP COMBINATIONS - COST BASED RATES | | | | | | | | | | | | | | | | |
| 2-WIRE VOICE GRADE LOOP- BUS ONLY - WITH 2-WIRE DID TRUNK PORT | | | | | | | | | | | | | | | | |
| UNE Port/Loop Combination Rates | | | | | | | | | | | | | | | | |
| | 2-Wire VG Loop/2-Wire DID Trunk Port Combo - UNE Zone 1 | | 1 | | | 20.95 | | | | | | | | | | |
| | 2-Wire VG Loop/2-Wire DID Trunk Port Combo - UNE Zone 2 | | 2 | | | 26.11 | | | | | | | | | | |
| | 2-Wire VG Loop/2-Wire DID Trunk Port Combo - UNE Zone 3 | | 3 | | | 39.58 | | | | | | | | | | |
| UNE Loop Rates | | | | | | | | | | | | | | | | |
| | 2-Wire Analog Voice Grade Loop - (SL2) - UNE Zone 1 | | 1 | UEPPX | UECD1 | 12.24 | | | | | | | | | | |
| | 2-Wire Analog Voice Grade Loop - (SL2) - UNE Zone 2 | | 2 | UEPPX | UECD1 | 17.40 | | | | | | | | | | |
| | 2-Wire Analog Voice Grade Loop - (SL2) - UNE Zone 3 | | 3 | UEPPX | UECD1 | 30.87 | | | | | | | | | | |
| UNE Port Rate | | | | | | | | | | | | | | | | |
| | Exchange Ports - 2-Wire DID Port | | | UEPPX | UEPD1 | 8.71 | 214.16 | 98.29 | | | | | | | | |
| NONRECURRING CHARGES - CURRENTLY COMBINED | | | | | | | | | | | | | | | | |
| | 2-Wire Voice Grade Loop / 2-Wire DID Trunk Port Combination - Switch-as-is | | | UEPPX | USAC1 | | 7.85 | 1.87 | | | | | | | | |
| | 2-Wire Voice Grade Loop / 2-Wire DID Trunk Port Conversion with BellSouth Allowable Changes | | | UEPPX | USA1C | | 7.85 | 1.87 | | | | | | | | |
| ADDITIONAL NRCs | | | | | | | | | | | | | | | | |
| | 2-Wire DID Subsequent Activity - Add Trunks, Per Trunk | | | UEPPX | USAS1 | | 32.26 | 32.26 | | | | | | | | |
| | Unbundled Miscellaneous Rate Element, Tag Designed Loop at End User Premise | | | UEPPX | URETN | | 11.21 | 1.10 | | | | | | | | |
| Telephone Number/Trunk Group Establisment Charges | | | | | | | | | | | | | | | | |
| | DID Trunk Termination (One Per Port) | | | UEPPX | NDT | 0.00 | 0.00 | 0.00 | | | | | | | | |
| | DID Numbers, Establish Trunk Group and Provide First Group of 20 DID Numbers | | | UEPPX | NDZ | 0.00 | 0.00 | 0.00 | | | | | | | | |
| | Additional DID Numbers for each Group of 20 DID Numbers | | | UEPPX | ND4 | 0.00 | 0.00 | 0.00 | | | | | | | | |
| | DID Numbers, Non- consecutive DID Numbers , Per Number | | | UEPPX | ND5 | 0.00 | 0.00 | 0.00 | | | | | | | | |
| | Reserve Non-Consecutive DID numbers | | | UEPPX | ND6 | 0.00 | 0.00 | 0.00 | | | | | | | | |
| | Reserve DID Numbers | | | UEPPX | NDV | 0.00 | 0.00 | 0.00 | | | | | | | | |
| LOCAL NUMBER PORTABILITY | | | | | | | | | | | | | | | | |
| | Local Number Portability (1 per port) | | | UEPPX | LNPCP | 3.15 | 0.00 | 0.00 | | | | | | | | |
| 2-WIRE ISDN DIGITAL GRADE LOOP WITH 2-WIRE ISDN DIGITAL LINE SIDE PORT | | | | | | | | | | | | | | | | |
| UNE Port/Loop Combination Rates | | | | | | | | | | | | | | | | |
| | 2W ISDN Digital Grade Loop/2W ISDN Digital Line Side Port - UNE Zone 1 | | 1 | UEPPB UEPPR | | 22.63 | | | | | | | | | | |
| | 2W ISDN Digital Grade Loop/2W ISDN Digital Line Side Port - UNE Zone 2 | | 2 | UEPPB UEPPR | | 29.05 | | | | | | | | | | |
| | 2W ISDN Digital Grade Loop/2W ISDN Digital Line Side Port - UNE Zone 3 | | 3 | UEPPB UEPPR | | 45.84 | | | | | | | | | | |
| UNE Loop Rates | | | | | | | | | | | | | | | | |
| | 2-Wire ISDN Digital Grade Loop - UNE Zone 1 | | 1 | UEPPB UEPPR | USL2X | 15.25 | | | | | | | | | | |
| | 2-Wire ISDN Digital Grade Loop - UNE Zone 2 | | 2 | UEPPB UEPPR | USL2X | 21.67 | | | | | | | | | | |
| | 2-Wire ISDN Digital Grade Loop - UNE Zone 3 | | 3 | UEPPB UEPPR | USL2X | 38.46 | | | | | | | | | | |
| UNE Port Rate | | | | | | | | | | | | | | | | |
| | Exchange Port - 2-Wire ISDN Line Side Port | | | UEPPB UEPPR | UEPPB | 7.38 | 194.52 | 145.09 | | | | | | | | |
| NONRECURRING CHARGES - CURRENTLY COMBINED | | | | | | | | | | | | | | | | |

| UNBUNDLED NETWORK ELEMENTS - Florida | | | | | | | | | | | | | Attachment: 2 | | Exhibit: A | |
|---|---|---|---|---|---|---|---|---|---|---|---|---|---|---|---|---|
| CATEGORY | RATE ELEMENTS | Interim | Zone | BCS | USOC | RATES ($) | | | | | Svc Order Submitted Elec per LSR | Svc Order Submitted Manually per LSR | Incremental Charge - Manual Svc Order vs. Electronic-1st | Incremental Charge - Manual Svc Order vs. Electronic-Add'l | Incremental Charge - Manual Svc Order vs. Electronic-Disc 1st | Incremental Charge - Manual Svc Order vs. Electronic-Disc Add'l |
| | | | | | | Rec | Nonrecurring | | Nonrecurring Disconnect | | OSS Rates ($) | | | | | |
| | | | | | | | First | Add'l | First | Add'l | SOMEC | SOMAN | SOMAN | SOMAN | SOMAN | SOMAN |
| | 2-Wire ISDN Digital Grade Loop / 2-Wire ISDN Line Side Port Combination - Conversion | | | UEPPB UEPPR | USACB | 0.00 | 25.22 | 17.00 | | | | | | | | |
| | **ADDITIONAL NRCs** | | | | | | | | | | | | | | | |
| | Unbundled Miscellaneous Rate Element, Tag Designed Loop at End User Premise | | | UEPPB UEPPR | URETN | | 11.21 | 1.10 | | | | | | | | |
| | Unbundled Miscellaneous Rate Element, Tag Loop at End User Premise | | | UEPPB UEPPR | URETL | | 8.33 | 0.83 | | | | | | | | |
| | **LOCAL NUMBER PORTABILITY** | | | | | | | | | | | | | | | |
| | Local Number Portability (1 per port) | | | UEPPB UEPPR | LNPCX | 0.35 | 0.00 | 0.00 | | | | | | | | |
| | **B-CHANNEL USER PROFILE ACCESS:** | | | | | | | | | | | | | | | |
| | CVS/CSD (DMS/5ESS) | | | UEPPB UEPPR | U1UCA | 0.00 | 0.00 | 0.00 | | | | | | | | |
| | CVS (EWSD) | | | UEPPB UEPPR | U1UCB | 0.00 | 0.00 | 0.00 | | | | | | | | |
| | CSD | | | UEPPB UEPPR | U1UCC | 0.00 | 0.00 | 0.00 | | | | | | | | |
| | **B-CHANNEL AREA PLUS USER PROFILE ACCESS: (AL,KY,LA,MS SC,MS, & TN)** | | | | | | | | | | | | | | | |
| | **USER TERMINAL PROFILE** | | | | | | | | | | | | | | | |
| | User Terminal Profile (EWSD only) | | | UEPPB UEPPR | U1UMA | 0.00 | 0.00 | 0.00 | | | | | | | | |
| | **VERTICAL FEATURES** | | | | | | | | | | | | | | | |
| | All Vertical Features - One per Channel B User Profile | | | UEPPB UEPPR | UEPVF | 2.26 | 0.00 | 0.00 | | | | | | | | |
| | **INTEROFFICE CHANNEL MILEAGE** | | | | | | | | | | | | | | | |
| | Interoffice Channel mileage each, including first mile and facilities termination | | | UEPPB UEPPR | M1GNC | 25.3291 | 47.35 | 31.78 | 18.31 | 7.03 | | | | | | |
| | Interoffice Channel mileage each, additional mile | | | UEPPB UEPPR | M1GNM | 0.0091 | 0.00 | 0.00 | | | | | | | | |
| | **4-WIRE DS1 DIGITAL LOOP WITH 4-WIRE ISDN DS1 DIGITAL TRUNK PORT** | | | | | | | | | | | | | | | |
| | **The UNE-P DS1 combination rates below for in this rate exhibit apply to the embedded base in place as of 10/2/03 until 4/1/04. After 4/1/04 these rates shall revert to tariff rates or a separate commercial agreement.** | | | | | | | | | | | | | | | |
| | **Requests for 4-Wire DS1 Digital Loop with 4-Wire ISDN DS1 Digital Trunk Port after the effective date of this amendment shall be provided pursuant to a separate agreement or tariff at BellSouth's discretion.** | | | | | | | | | | | | | | | |
| | **UNE Port/Loop Combination Rates** | | | | | | | | | | | | | | | |
| | 4W DS1 Digital Loop/4W ISDN DS1 Digital Trunk Port - UNE Zone 1 | | 1 | UEPPP | | 153.48 | | | | | | | | | | |
| | 4W DS1 Digital Loop/4W ISDN DS1 Digital Trunk Port - UNE Zone 2 | | 2 | UEPPP | | 183.28 | | | | | | | | | | |
| | 4W DS1 Digital Loop/4W ISDN DS1 Digital Trunk Port - UNE Zone 3 | | 3 | UEPPP | | 261.12 | | | | | | | | | | |
| | **UNE Loop Rates** | | | | | | | | | | | | | | | |
| | 4-Wire DS1 Digital Loop - UNE Zone 1 | | 1 | UEPPP | USL4P | 70.74 | | | | | | | | | | |
| | 4-Wire DS1 Digital Loop - UNE Zone 2 | | 2 | UEPPP | USL4P | 100.54 | | | | | | | | | | |
| | 4-Wire DS1 Digital Loop - UNE Zone 3 | | 3 | UEPPP | USL4P | 178.38 | | | | | | | | | | |
| | **UNE Port Rate** | | | | | | | | | | | | | | | |
| | Exchange Ports - 4-Wire ISDN DS1 Port (E:4/1/2004) | | | UEPPP | UEPPP | 82.74 | 488.36 | 276.65 | | | | | | | | |
| | **NONRECURRING CHARGES - CURRENTLY COMBINED** | | | | | | | | | | | | | | | |
| | 4-Wire DS1 Digital Loop / 4-Wire ISDN DS1 Digital Trunk Port Combination - Conversion -Switch-as-is (E:4/1/2004) | | | UEPPP | USACP | 0.00 | 84.17 | 61.38 | | | | | | | | |
| | **ADDITIONAL NRCs** | | | | | | | | | | | | | | | |
| | 4-Wire DS1 Loop/4-W ISDN Digtl Trk Port - Subsqt Actvy-Inward/two way Tel Nos. (except NC) | | | UEPPP | PR7TF | | 0.5412 | | | | | | | | | |
| | 4-Wire DS1 Loop / 4-Wire ISDN DS1 Digital Trunk Port - Outward Tel Numbers (All States except NC) | | | UEPPP | PR7TO | | 12.71 | 12.71 | | | | | | | | |
| | 4-Wire DS1 Loop / 4-Wire ISDN DS1 Digital Trk Port - Subsequent Inward Tel Numbers | | | UEPPP | PR7ZT | | 25.42 | 25.42 | | | | | | | | |
| | **LOCAL NUMBER PORTABILITY** | | | | | | | | | | | | | | | |
| | Local Number Portability (1 per port) | | | UEPPP | LNPCN | 1.75 | | | | | | | | | | |
| | **INTERFACE (Provsioning Only)** | | | | | | | | | | | | | | | |
| | Voice/Data | | | UEPPP | PR71V | 0.00 | 0.00 | 0.00 | | | | | | | | |
| | Digital Data | | | UEPPP | PR71D | 0.00 | 0.00 | 0.00 | | | | | | | | |
| | Inward Data | | | UEPPP | PR71E | 0.00 | 0.00 | 0.00 | | | | | | | | |
| | **New or Additional "B" Channel** | | | | | | | | | | | | | | | |
| | New or Additional - Voice/Data B Channel | | | UEPPP | PR7BV | 0.00 | 15.48 | | | | | | | | | |
| | New or Additional - Digital Data B Channel | | | UEPPP | PR7BF | 0.00 | 15.48 | | | | | | | | | |
| | New or Additional Inward Data B Channel | | | UEPPP | PR7BD | 0.00 | 15.48 | | | | | | | | | |
| | **CALL TYPES** | | | | | | | | | | | | | | | |

| UNBUNDLED NETWORK ELEMENTS - Florida | | | | | | | | | | | | | | Attachment: 2 | | Exhibit: A | |
|---|---|---|---|---|---|---|---|---|---|---|---|---|---|---|---|---|---|
| CATEGORY | RATE ELEMENTS | Interim | Zone | BCS | USOC | RATES ($) | | | | | Svc Order Submitted Elec per LSR | Svc Order Submitted Manually per LSR | Incremental Charge - Manual Svc Order vs. Electronic-1st | Incremental Charge - Manual Svc Order vs. Electronic-Add'l | Incremental Charge - Manual Svc Order vs. Electronic-Disc 1st | Incremental Charge - Manual Svc Order vs. Electronic-Disc Add'l |
| | | | | | | Rec | Nonrecurring | | Nonrecurring Disconnect | | OSS Rates ($) | | | | | |
| | | | | | | | First | Add'l | First | Add'l | SOMEC | SOMAN | SOMAN | SOMAN | SOMAN | SOMAN |
| | Inward | | | UEPPP | PR7C1 | 0.00 | 0.00 | 0.00 | | | | | | | | |
| | Outward | | | UEPPP | PR7CO | 0.00 | 0.00 | 0.00 | | | | | | | | |
| | Two-way | | | UEPPP | PR7CC | 0.00 | 0.00 | 0.00 | | | | | | | | |
| **Interoffice Channel Mileage** | | | | | | | | | | | | | | | | |
| | Fixed Each Including First Mile | | | UEPPP | 1LN1A | 88.6256 | 105.54 | 98.47 | 21.47 | 19.05 | | | | | | |
| | Each Airline-Fractional Additional Mile | | | UEPPP | 1LN1B | 0.1856 | | | | | | | | | | |
| **4-WIRE DS1 DIGITAL LOOP WITH 4-WIRE DDITS TRUNK PORT** | | | | | | | | | | | | | | | | |
| **The UNE-P DS1 combination rates below for in this rate exhibit apply to the embedded base in place as of 10/2/03 until 4/1/04. After 4/1/04 these rates shall revert to tariff rates or a separate commercial agreement.** | | | | | | | | | | | | | | | | |
| **Requests for 4-Wire DS1 Digital Loop with 4-Wire DDITS after the effective date of this amendment shall be provided pursuant to a separate agreement or tariff at BellSouth's discretion.** | | | | | | | | | | | | | | | | |
| **UNE Port/Loop Combination Rates** | | | | | | | | | | | | | | | | |
| | 4W DS1 Digital Loop/4W DDITS Trunk Port - UNE Zone 1 | | 1 | UEPDC | | 125.69 | | | | | | | | | | |
| | 4W DS1 Digital Loop/4W DDITS Trunk Port - UNE Zone 2 | | 2 | UEPDC | | 155.49 | | | | | | | | | | |
| | 4W DS1 Digital Loop/4W DDITS Trunk Port - UNE Zone 3 | | 3 | UEPDC | | 233.33 | | | | | | | | | | |
| **UNE Loop Rates** | | | | | | | | | | | | | | | | |
| | 4-Wire DS1 Digital Loop - UNE Zone 1 | | 1 | UEPDC | USLDC | 70.74 | | | | | | | | | | |
| | 4-Wire DS1 Digital Loop - UNE Zone 2 | | 2 | UEPDC | USLDC | 100.54 | | | | | | | | | | |
| | 4-Wire DS1 Digital Loop - UNE Zone 3 | | 3 | UEPDC | USLDC | 178.38 | | | | | | | | | | |
| **UNE Port Rate** | | | | | | | | | | | | | | | | |
| | 4-Wire DDITS Digital Trunk Port (E:4/1/2004) | | | UEPDC | UDD1T | 54.95 | 464.86 | 259.23 | | | | | | | | |
| **NONRECURRING CHARGES - CURRENTLY COMBINED** | | | | | | | | | | | | | | | | |
| | 4-Wire DS1 Digital Loop / 4-Wire DDITS Trunk Port Combination - Switch-as-is (E:4/1/2004) | | | UEPDC | USAC4 | | 95.31 | 46.71 | | | | | | | | |
| | 4-Wire DS1 Digital Loop / 4-Wire DDITS Trunk Port Combination - Conversion with DS1 Changes (E:4/1/2004) | | | UEPDC | USAWA | | 95.31 | 46.71 | | | | | | | | |
| | 4-Wire DS1 Digital Loop / 4-Wire DDITS Trunk Port Combination - Conversion with Change - Trunk (E:4/1/2004) | | | UEPDC | USAWB | | 95.31 | 46.71 | | | | | | | | |
| **ADDITIONAL NRCs** | | | | | | | | | | | | | | | | |
| | 4-Wire DS1 Loop / 4-Wire DDITS Trunk Port - NRC - Subsequent Channel Activation/Chan - 2-Way Trunk | | | UEPDC | UDTTA | | 15.69 | 15.69 | | | | | | | | |
| | 4-Wire DS1 Loop / 4-Wire DDITS Trunk Port - Subsequent Channel Activation/Chan - 1-Way Outward Trunk | | | UEPDC | UDTTB | | 15.69 | 15.69 | | | | | | | | |
| | 4-Wire DS1 Loop / 4-Wire DDITS Trunk Port - Subsqnt Channel Activation/Chan Inward Trunk w/out DID | | | UEPDC | UDTTC | | 15.69 | 15.69 | | | | | | | | |
| | 4-Wire DS1 Loop / 4-Wire DDITS Trunk Port - Subsqnt Chan Activation Per Chan - Inward Trunk with DID | | | UEPDC | UDTTD | | 15.69 | 15.69 | | | | | | | | |
| | 4-Wire DS1 Loop / 4-Wire DDITS Trunk Port - Subsqnt Chan Activation / Chan - 2-Way DID w User Trans | | | UEPDC | UDTTE | | 15.69 | 15.69 | | | | | | | | |
| **BIPOLAR 8 ZERO SUBSTITUTION** | | | | | | | | | | | | | | | | |
| | B8ZS -Superframe Format | | | UEPDC | CCOSF | | 0.00i | 655.00s | | | | | | | | |
| | B8ZS - Extended Superframe Format | | | UEPDC | CCOEF | | 0.00i | 655.00s | | | | | | | | |
| **Alternate Mark Inversion** | | | | | | | | | | | | | | | | |
| | AMI -Superframe Format | | | UEPDC | MCOSF | | 0.00 | 0.00 | | | | | | | | |
| | AMI - Extended SuperFrame Format | | | UEPDC | MCOPO | | 0.00 | 0.00 | | | | | | | | |
| **Telephone Number/Trunk Group Establisment Charges** | | | | | | | | | | | | | | | | |
| | Telephone Number for 2-Way Trunk Group | | | UEPDC | UDTGX | 0.00 | | | | | | | | | | |
| | Telephone Number for 1-Way Outward Trunk Group | | | UEPDC | UDTGY | 0.00 | | | | | | | | | | |
| | Telephone Number for 1-Way Inward Trunk Group Without DID | | | UEPDC | UDTGZ | 0.00 | | | | | | | | | | |
| | DID Numbers, Establish Trunk Group and Provide First Group of 20 DID Numbers | | | UEPDC | NDZ | 0.00 | 0.00 | 0.00 | | | | | | | | |
| | DID Numbers for each Group of 20 DID Numbers | | | UEPDC | ND4 | 0.00 | | | | | | | | | | |
| | DID Numbers, Non- consecutive DID Numbers , Per Number | | | UEPDC | ND5 | 0.00 | | | | | | | | | | |
| | Reserve Non-Consecutive DID Nos. | | | UEPDC | ND6 | 0.00 | 0.00 | 0.00 | | | | | | | | |
| | Reserve DID Numbers | | | UEPDC | NDV | 0.00 | 0.00 | 0.00 | | | | | | | | |
| **Dedicated DS1 (Interoffice Channel Mileage) - FX/FCO for 4-Wire DS1 Digital Loop with 4-Wire DDITS Trunk Port** | | | | | | | | | | | | | | | | |
| | Interoffice Channel Mileage - Fixed rate 0-8 miles (Facilities Termination) | | | UEPDC | 1LNO1 | 88.44 | 105.54 | 98.47 | 21.47 | 19.05 | | | | | | |
| | Interoffice Channel Mileage - Additional rate per mile - 0-8 miles | | | UEPDC | 1LNOA | 0.1856 | 0.00 | 0.00 | | | | | | | | |

| UNBUNDLED NETWORK ELEMENTS - Florida | | | | | | | | | | | | | | Attachment: 2 | | Exhibit: A | |
|---|---|---|---|---|---|---|---|---|---|---|---|---|---|---|---|---|---|
| CATEGORY | RATE ELEMENTS | Interim | Zone | BCS | USOC | RATES ($) | | | | | Svc Order Submitted Elec per LSR | Svc Order Submitted Manually per LSR | Incremental Charge - Manual Svc Order vs. Electronic-1st | Incremental Charge - Manual Svc Order vs. Electronic-Add'l | Incremental Charge - Manual Svc Order vs. Electronic-Disc 1st | Incremental Charge - Manual Svc Order vs. Electronic-Disc Add'l |
| | | | | | | Rec | Nonrecurring | | Nonrecurring Disconnect | | OSS Rates ($) | | | | | |
| | | | | | | | First | Add'l | First | Add'l | SOMEC | SOMAN | SOMAN | SOMAN | SOMAN | SOMAN |
| | Interoffice Channel Mileage - Fixed rate 9-25 miles (Facilities Termination) | | | UEPDC | 1LNO2 | 0.00 | 0.00 | 0.00 | | | | | | | | |
| | Interoffice Channel Mileage - Additional rate per mile - 9-25 miles | | | UEPDC | 1LNOB | 0.1856 | 0.00 | 0.00 | | | | | | | | |
| | Interoffice Channel Mileage - Fixed rate 25+ miles (Facilities Termination) | | | UEPDC | 1LNO3 | 0.00 | 0.00 | 0.00 | 0.00 | | | | | | | |
| | Interoffice Channel Mileage - Additional rate per mile - 25+ miles | | | UEPDC | 1LNOC | 0.1856 | 0.00 | 0.00 | | | | | | | | |
| | Local Number Portability, per DS0 Activated | | | UEPDC | LNPCP | 3.15 | 0.00 | 0.00 | 0.00 | | | | | | | |
| | Central Office Termininating Point | | | UEPDC | CTG | 0.00 | | | | | | | | | | |
| | **4-WIRE DS1 LOOP WITH CHANNELIZATION WITH PORT** | | | | | | | | | | | | | | | |
| | **System is 1 DS1 Loop, 1 D4 Channel Bank, and up to 24 Feature Activations** | | | | | | | | | | | | | | | |
| | **Each System can have up to 24 combinations of rates depending on type and number of ports used** | | | | | | | | | | | | | | | |
| | **The UNE-P DS1 combination rates below for 4-Wire DS1 Loop with Channelization with Port in this rate exhibit apply to the embedded base in place as of 10/2/03 until 4/1/04. After 4/1/04 these rates shall revert to tariff rates or a separate agreement.** | | | | | | | | | | | | | | | |
| | **Requests for 4-Wire DS1 Loop with Channelization with Port after the effective date of this amendment shall be provided pursuant to a separate agreement or tariff at BellSouth's discretion.** | | | | | | | | | | | | | | | |
| | **UNE DS1 Loop** | | | | | | | | | | | | | | | |
| | 4-Wire DS1 Loop - UNE Zone 1 | | 1 | UEPMG | USLDC | 70.74 | 0.00 | 0.00 | | | | | | | | |
| | 4-Wire DS1 Loop - UNE Zone 2 | | 2 | UEPMG | USLDC | 100.54 | 0.00 | 0.00 | | | | | | | | |
| | 4-Wire DS1 Loop - UNE Zone 3 | | 3 | UEPMG | USLDC | 178.38 | 0.00 | 0.00 | | | | | | | | |
| | **UNE DSO Channelization Capacities (D4 Channel Bank Configurations)** | | | | | | | | | | | | | | | |
| | 24 DSO Channel Capacity - 1 per DS1 | | | UEPMG | VUM24 | 118.06 | 0.00 | 0.00 | | | | | | | | |
| | 48 DSO Channel Capacity - 1 per 2 DS1s | | | UEPMG | VUM48 | 236.12 | 0.00 | 0.00 | | | | | | | | |
| | 96 DSO Channel Capacity -1per 4 DS1s | | | UEPMG | VUM96 | 472.24 | 0.00 | 0.00 | | | | | | | | |
| | 144 DS0 Channel Capacity - 1 per 6 DS1s | | | UEPMG | VUM14 | 708.36 | 0.00 | 0.00 | | | | | | | | |
| | 192 DS0 Channel Capacity -1 per 8 DS1s | | | UEPMG | VUM19 | 944.48 | 0.00 | 0.00 | | | | | | | | |
| | 240 DS0 Channel Capacity - 1 per 10 DS1s | | | UEPMG | VUM2O | 1,180.60 | 0.00 | 0.00 | | | | | | | | |
| | 288 DS0 Channel Capacity - 1 per 12 DS1s | | | UEPMG | VUM28 | 1,416.72 | 0.00 | 0.00 | | | | | | | | |
| | 384 DS0 Channel Capacity - 1 per 16 DS1s | | | UEPMG | VUM38 | 1,888.96 | 0.00 | 0.00 | | | | | | | | |
| | 480 DS0 Channel Capacity - 1 per 20 DS1s | | | UEPMG | VUM4O | 2,361.20 | 0.00 | 0.00 | | | | | | | | |
| | 576 DS0 Channel Capacity -1 per 24 DS1s | | | UEPMG | VUM57 | 2,833.44 | 0.00 | 0.00 | | | | | | | | |
| | 672 DS0 Channel Capacity - 1 per 28 DS1s | | | UEPMG | VUM67 | 3,305.68 | 0.00 | 0.00 | | | | | | | | |
| | **Non-Recurring Charges (NRC) Associated with 4-Wire DS1 Loop with Channeliztion with Port - Conversion Charge Based on a System** | | | | | | | | | | | | | | | |
| | **A Minimum System configuration is One (1) DS1, One (1) D4 Channel Bank, and Up To 24 DSO Ports with Feature Activations.** | | | | | | | | | | | | | | | |
| | **Multiples of this configuration functioning as one are considered Add'l after the minimum system configuration is counted.** | | | | | | | | | | | | | | | |
| | NRC - Conversion (Currently Combined) with or without BellSouth Allowed Changes | | | UEPMG | USAC4 | 0.00 | 96.77 | 4.24 | | | | | | | | |
| | **System Additions at End User Locations Where 4-Wire DS1 Loop with Channelization with Port Combination Currently Exists and** | | | | | | | | | | | | | | | |
| | **New (Not Currently Combined) in all states, except in Density Zone 1 of Top 8 MSA's** | | | | | | | | | | | | | | | |
| | 1 DS1/D4 Channel Bank - Additionally Add NRC for each Port and Assoc Fea Activation (E:4/1/2004) | | | UEPMG | VUMD4 | 0.00 | 726.11 | 468.21 | 145.32 | 17.24 | | | | | | |
| | **Bipolar 8 Zero Substitution** | | | | | | | | | | | | | | | |
| | Clear Channel Capability Format, superframe - Subsequent Activity Only | | | UEPMG | CCOSF | 0.00 | 0.00i | 655.00s | | | | | | | | |
| | Clear Channel Capability Format - Extended Superframe - Subsequent Activity Only | | | UEPMG | CCOEF | 0.00 | 0.00i | 655.00s | | | | | | | | |
| | **Alternate Mark Inversion (AMI)** | | | | | | | | | | | | | | | |
| | Superframe Format | | | UEPMG | MCOSF | 0.00 | 0.00 | 0.00 | | | | | | | | |
| | Extended Superframe Format | | | UEPMG | MCOPO | 0.00 | 0.00 | 0.00 | | | | | | | | |
| | **Exchange Ports Associated with 4-Wire DS1 Loop with Channelization with Port** | | | | | | | | | | | | | | | |
| | **Exchange Ports** | | | | | | | | | | | | | | | |
| | Line Side Combination Channelized PBX Trunk Port - Business (E:4/1/2004) | | | UEPPX | UEPCX | 1.40 | 0.00 | 0.00 | 0.00 | 0.00 | | | | | | |
| | Line Side Outward Channelized PBX Trunk Port - Business (E:4/1/2004) | | | UEPPX | UEPOX | 1.40 | 0.00 | 0.00 | 0.00 | 0.00 | | | | | | |
| | Line Side Inward Only Channelized PBX Trunk Port without DID (E:4/1/2004) | | | UEPPX | UEP1X | 1.40 | 0.00 | 0.00 | 0.00 | 0.00 | | | | | | |
| | 2-Wire Trunk Side Unbundled Channelized DID Trunk Port (E:4/1/2004) | | | UEPPX | UEPDM | 8.71 | 0.00 | 0.00 | 0.00 | 0.00 | | | | | | |
| | **Feature Activations - Unbundled Loop Concentration** | | | | | | | | | | | | | | | |

| UNBUNDLED NETWORK ELEMENTS - Florida | | | | | | | | | | | | | | Attachment: 2 | | Exhibit: A | |
|---|---|---|---|---|---|---|---|---|---|---|---|---|---|---|---|---|---|
| CATEGORY | RATE ELEMENTS | Interim | Zone | BCS | USOC | RATES ($) | | | | | Svc Order Submitted Elec per LSR | Svc Order Submitted Manually per LSR | Incremental Charge - Manual Svc Order vs. Electronic-1st | Incremental Charge - Manual Svc Order vs. Electronic-Add'l | Incremental Charge - Manual Svc Order vs. Electronic-Disc 1st | Incremental Charge - Manual Svc Order vs. Electronic-Disc Add'l |
| | | | | | | Rec | Nonrecurring | | Nonrecurring Disconnect | | OSS Rates ($) | | | | | |
| | | | | | | | First | Add'l | First | Add'l | SOMEC | SOMAN | SOMAN | SOMAN | SOMAN | SOMAN |
| | Feature (Service) Activation for each Line Port Terminated in D4 Bank | | | UEPPX | 1PQWM | 0.6402 | 25.40 | 13.41 | 3.96 | 3.93 | | | | | | |
| | Feature (Service) Activation for each Trunk Port Terminated in D4 Bank | | | UEPPX | 1PQWU | 0.6402 | 78.16 | 18.42 | 56.03 | 10.95 | | | | | | |
| | **Telephone Number/ Group Establishment Charges for DID Service** | | | | | | | | | | | | | | | |
| | DID Trunk Termination (1 per Port) | | | UEPPX | NDT | 0.00 | 0.00 | 0.00 | | | | | | | | |
| | Estab Trk Grp and Provide 1st 20 DID Nos. (FL,GA, NC,& SC) | | | UEPPX | NDZ | 0.00 | 0.00 | 0.00 | | | | | | | | |
| | DID Numbers - groups of 20 - Valid all States | | | UEPPX | ND4 | 0.00 | 0.00 | 0.00 | | | | | | | | |
| | Non-Consecutive DID Numbers - per number | | | UEPPX | ND5 | 0.00 | 0.00 | 0.00 | | | | | | | | |
| | Reserve Non-Consecutive DID Numbers | | | UEPPX | ND6 | 0.00 | 0.00 | 0.00 | | | | | | | | |
| | Reserve DID Numbers | | | UEPPX | NDV | 0.00 | 0.00 | 0.00 | | | | | | | | |
| | **Local Number Portability** | | | | | | | | | | | | | | | |
| | Local Number Portability - 1 per port | | | UEPPX | LNPCP | 3.15 | 0.00 | 0.00 | | | | | | | | |
| | **FEATURES - Vertical and Optional** | | | | | | | | | | | | | | | |
| | **Local Switching Features Offered with Line Side Ports Only** | | | | | | | | | | | | | | | |
| | All Features Available | | | UEPPX | UEPVF | 2.26 | 0.00 | 0.00 | | | | | | | | |
| **UNBUNDLED CENTREX PORT/LOOP COMBINATIONS - COST BASED RATES** | | | | | | | | | | | | | | | | |
| **1. Cost Based Rates are applied where BellSouth is required by FCC and/or State Commission rule to provide Unbundled Local Switching or Switch Ports.** | | | | | | | | | | | | | | | | |
| **2. Features shall apply to the Unbundled Port/Loop Combination - Cost Based Rate section in the same manner as they are applied to the Stand-Alone Unbundled Port section of this Rate Exhibit.** | | | | | | | | | | | | | | | | |
| **3. End Office and Tandem Switching Usage and Common Transport Usage rates in the Port section of this rate exhibit shall apply to all combinations of loop/port network elements except for UNE Coin Port/Loop Combinations.** | | | | | | | | | | | | | | | | |
| **4. The first and additional Port nonrecurring charges apply to Not Currently Combined Combos. For Currently Combined Combos, the nonrecurring charges shall be those identified in the Nonrecurring - Currently Combined sections. Additional NRCs may apply also and are categorized accordingly.** | | | | | | | | | | | | | | | | |
| **5. Market Rates for Unbundled Centrex Port/Loop Combination will be negotiated on an Individual Case Basis, until further notice.** | | | | | | | | | | | | | | | | |
| **UNE-P CENTREX - 1AESS - (Valid in AL,FL,GA,KY,LA,MS,&TN only)** | | | | | | | | | | | | | | | | |
| **2-Wire VG Loop/2-Wire Voice Grade Port (Centrex) Combo** | | | | | | | | | | | | | | | | |
| **UNE Port/Loop Combination Rates (Non-Design)** | | | | | | | | | | | | | | | | |
| | 2-Wire VG Loop/2-Wire Voice Grade Port (Centrex) Port Combo - Non-Design | | 1 | UEP91 | | 10.94 | | | | | | | | | | |
| | 2-Wire VG Loop/2-Wire Voice Grade Port (Centrex)Port Combo - Non-Design | | 2 | UEP91 | | 15.05 | | | | | | | | | | |
| | 2-Wire VG Loop/2-Wire Voice Grade Port (Centrex)Port Combo - Non-Design | | 3 | UEP91 | | 25.80 | | | | | | | | | | |
| **UNE Port/Loop Combination Rates (Design)** | | | | | | | | | | | | | | | | |
| | 2-Wire VG Loop/2-Wire Voice Grade Port (Centrex) Port Combo - Design | | 1 | UEP91 | | 13.41 | | | | | | | | | | |
| | 2-Wire VG Loop/2-Wire Voice Grade Port (Centrex)Port Combo - Design | | 2 | UEP91 | | 18.57 | | | | | | | | | | |
| | 2-Wire VG Loop/2-Wire Voice Grade Port (Centrex)Port Combo - Design | | 3 | UEP91 | | 32.04 | | | | | | | | | | |
| **UNE Loop Rate** | | | | | | | | | | | | | | | | |
| | 2-Wire Voice Grade Loop (SL 1) - Zone 1 | | 1 | UEP91 | UECS1 | 9.77 | | | | | | | | | | |
| | 2-Wire Voice Grade Loop (SL 1) - Zone 2 | | 2 | UEP91 | UECS1 | 13.88 | | | | | | | | | | |
| | 2-Wire Voice Grade Loop (SL 1) - Zone 3 | | 3 | UEP91 | UECS1 | 24.63 | | | | | | | | | | |
| | 2-Wire Voice Grade Loop (SL 2) - Zone 1 | | 1 | UEP91 | UECS2 | 12.24 | | | | | | | | | | |
| | 2-Wire Voice Grade Loop (SL 2) - Zone 2 | | 2 | UEP91 | UECS2 | 17.40 | | | | | | | | | | |
| | 2-Wire Voice Grade Loop (SL 2) - Zone 3 | | 3 | UEP91 | UECS2 | 30.87 | | | | | | | | | | |
| **UNE Ports** | | | | | | | | | | | | | | | | |
| **All States (Except North Carolina and Sout Carolina)** | | | | | | | | | | | | | | | | |
| | 2-Wire Voice Grade Port (Centrex ) Basic Local Area | | | UEP91 | UEPYA | 1.17 | 53.31 | 26.46 | 27.50 | 8.37 | | | | | | |
| | 2-Wire Voice Grade Port (Centrex 800 termination)Basic Local Area | | | UEP91 | UEPYB | 1.17 | 53.31 | 26.46 | 27.50 | 8.37 | | | | | | |
| | 2-Wire Voice Grade Port (Centrex with Caller ID)Note1 Basic Local Area | | | UEP91 | UEPYH | 1.17 | 53.31 | 26.46 | 27.50 | 8.37 | | | | | | |
| | 2-Wire Voice Grade Port (Centrex from diff Serving Wire Center) Note 2, 3 Basic Local Area | | | UEP91 | UEPYM | 1.17 | 139.49 | 86.10 | 65.41 | 13.81 | | | | | | |
| | 2-Wire Voice Grade Port, Diff Serving Wire Center - 800 Service Term - Basic Local Area | | | UEP91 | UEPYZ | 1.17 | 139.49 | 86.10 | 65.41 | 13.81 | | | | | | |
| | 2-Wire Voice Grade Port terminated in on Megalink or equivalent - Basic Local Area | | | UEP91 | UEPY9 | 1.17 | 53.31 | 26.46 | 27.50 | 8.37 | | | | | | |

| UNBUNDLED NETWORK ELEMENTS - Florida | | | | | | | | | | | | | | Attachment: 2 | | Exhibit: A | |
|---|---|---|---|---|---|---|---|---|---|---|---|---|---|---|---|---|---|
| CATEGORY | RATE ELEMENTS | Interim | Zone | BCS | USOC | RATES ($) | | | | | Svc Order Submitted Elec per LSR | Svc Order Submitted Manually per LSR | Incremental Charge - Manual Svc Order vs. Electronic-1st | Incremental Charge - Manual Svc Order vs. Electronic-Add'l | Incremental Charge - Manual Svc Order vs. Electronic-Disc 1st | Incremental Charge - Manual Svc Order vs. Electronic-Disc Add'l |
| | | | | | | Rec | Nonrecurring | | Nonrecurring Disconnect | | | | OSS Rates ($) | | | |
| | | | | | | | First | Add'l | First | Add'l | SOMEC | SOMAN | SOMAN | SOMAN | SOMAN | SOMAN |
| | 2-Wire Voice Grade Port Terminated on 800 Service Term - Basic Local Area | | | UEP91 | UEPY2 | 1.17 | 53.31 | 26.46 | 27.50 | 8.37 | | | | | | |
| Georgia and Florida Only | | | | | | | | | | | | | | | | |
| | 2-Wire Voice Grade Port (Centrex ) | | | UEP91 | UEPHA | 1.17 | 53.31 | 26.46 | 27.50 | 8.37 | | | | | | |
| | 2-Wire Voice Grade Port (Centrex 800 termination) | | | UEP91 | UEPHB | 1.17 | 53.31 | 26.46 | 27.50 | 8.37 | | | | | | |
| | 2-Wire Voice Grade Port (Centrex with Caller ID)1 | | | UEP91 | UEPHH | 1.17 | 53.31 | 26.46 | 27.50 | 8.37 | | | | | | |
| | 2-Wire Voice Grade Port (Centrex from diff Serving Wire Center)2,3 | | | UEP91 | UEPHM | 1.17 | 139.49 | 86.10 | 65.41 | 13.81 | | | | | | |
| | 2-Wire Voice Grade Port, Diff Serving Wire Center 2,3 - 800 Service Term | | | UEP91 | UEPHZ | 1.17 | 139.49 | 86.10 | 65.41 | 13.81 | | | | | | |
| | 2-Wire Voice Grade Port terminated in on Megalink or equivalent | | | UEP91 | UEPH9 | 1.17 | 53.31 | 26.46 | 27.50 | 8.37 | | | | | | |
| | 2-Wire Voice Grade Port Terminated on 800 Service Term | | | UEP91 | UEPH2 | 1.17 | 53.31 | 26.46 | 27.50 | 8.37 | | | | | | |
| Local Switching | | | | | | | | | | | | | | | | |
| | Centrex Intercom Funtionality, per port | | | UEP91 | URECS | 0.7384 | | | | | | | | | | |
| Local Number Portability | | | | | | | | | | | | | | | | |
| | Local Number Portability (1 per port) | | | UEP91 | LNPCC | 0.35 | | | | | | | | | | |
| Features | | | | | | | | | | | | | | | | |
| | All Standard Features Offered, per port | | | UEP91 | UEPVF | 2.26 | | | | | | | | | | |
| | All Select Features Offered, per port | | | UEP91 | UEPVS | 0.00 | 370.70 | | | | | | | | | |
| | All Centrex Control Features Offered, per port | | | UEP91 | UEPVC | 2.26 | | | | | | | | | | |
| NARS | | | | | | | | | | | | | | | | |
| | Unbundled Network Access Register - Combination | | | UEP91 | UARCX | 0.00 | 0.00 | 0.00 | 0.00 | 0.00 | | | | | | |
| | Unbundled Network Access Register - Indial | | | UEP91 | UAR1X | 0.00 | 0.00 | 0.00 | 0.00 | 0.00 | | | | | | |
| | Unbundled Network Access Register - Outdial | | | UEP91 | UAROX | 0.00 | 0.00 | 0.00 | 0.00 | 0.00 | | | | | | |
| Miscellaneous Terminations | | | | | | | | | | | | | | | | |
| 2-Wire Trunk Side | | | | | | | | | | | | | | | | |
| | Trunk Side Terminations, each | | | UEP91 | CENA6 | 8.73 | | | | | | | | | | |
| Interoffice Channel Mileage - 2-Wire | | | | | | | | | | | | | | | | |
| | Interoffice Channel Facilities Termination - Voice Grade | | | UEP91 | M1GBC | 25.32 | | | | | | | | | | |
| | Interoffice Channel mileage, per mile or fraction of mile | | | UEP91 | M1GBM | 0.0091 | | | | | | | | | | |
| Feature Activations (DS0) Centrex Loops on Channelized DS1 Service | | | | | | | | | | | | | | | | |
| D4 Channel Bank Feature Activations | | | | | | | | | | | | | | | | |
| | Feature Activation on D-4 Channel Bank Centrex Loop Slot | | | UEP91 | 1PQWS | 0.66 | | | | | | | | | | |
| | Feature Activation on D-4 Channel Bank FX line Side Loop Slot | | | UEP91 | 1PQW6 | 0.66 | | | | | | | | | | |
| | Feature Activation on D-4 Channel Bank FX Trunk Side Loop Slot | | | UEP91 | 1PQW7 | 0.66 | | | | | | | | | | |
| | Feature Activation on D-4 Channel Bank Centrex Loop Slot - Different Wire Center | | | UEP91 | 1PQWP | 0.66 | | | | | | | | | | |
| | Feature Activation on D-4 Channel Bank Private Line Loop Slot | | | UEP91 | 1PQWV | 0.66 | | | | | | | | | | |
| | Feature Activation on D-4 Channel Bank Tjle Line/Trunk Loop Slot | | | UEP91 | 1PQWQ | 0.66 | | | | | | | | | | |
| | Feature Activation on D-4 Channel Bank WATS Loop Slot | | | UEP91 | 1PQWA | 0.66 | | | | | | | | | | |
| Non-Recurring Charges (NRC) Associated with UNE-P Centrex | | | | | | | | | | | | | | | | |
| | Conversion - Currently Combined Switch-As-Is with allowed changes, per port | | | UEP91 | USAC2 | | 21.50 | 8.42 | | | | | | | | |
| | Conversion of Existing Centrex Common Block | | | UEP91 | USACN | | 5.17 | 8.32 | | | | | | | | |
| | New Centrex Standard Common Block | | | UEP91 | M1ACS | 0.00 | 618.82 | | | | | | | | | |
| | New Centrex Customized Common Block | | | UEP91 | M1ACC | 0.00 | 618.82 | | | | | | | | | |
| | Secondary Block, per Block | | | UEP91 | M2CC1 | 0.00 | 71.31 | | | | | | | | | |
| | NAR Establishment Charge, Per Occasion | | | UEP91 | URECA | 0.00 | 66.48 | | | | | | | | | |
| UNE-P CENTREX - 5ESS (Valid in All States) | | | | | | | | | | | | | | | | |
| 2-Wire VG Loop/2-Wire Voice Grade Port (Centrex) Combo | | | | | | | | | | | | | | | | |
| UNE Port/Loop Combination Rates (Non-Design) | | | | | | | | | | | | | | | | |
| | 2-Wire VG Loop/2-Wire Voice Grade Port (Centrex) Port Combo - Non-Design | | 1 | UEP95 | | 10.94 | | | | | | | | | | |

| UNBUNDLED NETWORK ELEMENTS - Florida | | | | | | | | | | | | | | Attachment: 2 | | Exhibit: A | |
|---|---|---|---|---|---|---|---|---|---|---|---|---|---|---|---|---|---|
| CATEGORY | | RATE ELEMENTS | Interim | Zone | BCS | USOC | RATES ($) | | | | | Svc Order Submitted Elec per LSR | Svc Order Submitted Manually per LSR | Incremental Charge - Manual Svc Order vs. Electronic-1st | Incremental Charge - Manual Svc Order vs. Electronic-Add'l | Incremental Charge - Manual Svc Order vs. Electronic-Disc 1st | Incremental Charge - Manual Svc Order vs. Electronic-Disc Add'l |
| | | | | | | | Rec | Nonrecurring | | Nonrecurring Disconnect | | OSS Rates ($) | | | | | |
| | | | | | | | | First | Add'l | First | Add'l | SOMEC | SOMAN | SOMAN | SOMAN | SOMAN | SOMAN |
| | | 2-Wire VG Loop/2-Wire Voice Grade Port (Centrex)Port Combo - Non-Design | | 2 | UEP95 | | 15.05 | | | | | | | | | | |
| | | 2-Wire VG Loop/2-Wire Voice Grade Port (Centrex)Port Combo - Non-Design | | 3 | UEP95 | | 25.80 | | | | | | | | | | |
| | **UNE Port/Loop Combination Rates (Design)** | | | | | | | | | | | | | | | | |
| | | 2-Wire VG Loop/2-Wire Voice Grade Port (Centrex) Port Combo - Design | | 1 | UEP95 | | 13.41 | | | | | | | | | | |
| | | 2-Wire VG Loop/2-Wire Voice Grade Port (Centrex)Port Combo - Design | | 2 | UEP95 | | 18.57 | | | | | | | | | | |
| | | 2-Wire VG Loop/2-Wire Voice Grade Port (Centrex)Port Combo - Design | | 3 | UEP95 | | 32.04 | | | | | | | | | | |
| | **UNE Loop Rate** | | | | | | | | | | | | | | | | |
| | | 2-Wire Voice Grade Loop (SL 1) - Zone 1 | | 1 | UEP95 | UECS1 | 9.77 | | | | | | | | | | |
| | | 2-Wire Voice Grade Loop (SL 1) - Zone 2 | | 2 | UEP95 | UECS1 | 13.88 | | | | | | | | | | |
| | | 2-Wire Voice Grade Loop (SL 1) - Zone 3 | | 3 | UEP95 | UECS1 | 24.63 | | | | | | | | | | |
| | | 2-Wire Voice Grade Loop (SL 2) - Zone 1 | | 1 | UEP95 | UECS2 | 12.24 | | | | | | | | | | |
| | | 2-Wire Voice Grade Loop (SL 2) - Zone 2 | | 2 | UEP95 | UECS2 | 17.40 | | | | | | | | | | |
| | | 2-Wire Voice Grade Loop (SL 2) - Zone 3 | | 3 | UEP95 | UECS2 | 30.87 | | | | | | | | | | |
| | **UNE Port Rate** | | | | | | | | | | | | | | | | |
| | **All States** | | | | | | | | | | | | | | | | |
| | | 2-Wire Voice Grade Port (Centrex ) Basic Local Area | | | UEP95 | UEPYA | 1.17 | 53.31 | 26.46 | 27.50 | 8.37 | | | | | | |
| | | 2-Wire Voice Grade Port (Centrex 800 termination) | | | UEP95 | UEPYB | 1.17 | 53.31 | 26.46 | 27.50 | 8.37 | | | | | | |
| | | 2-Wire Voice Grade Port (Centrex with Caller ID)1Basic Local Area | | | UEP95 | UEPYH | 1.17 | 53.31 | 26.46 | 27.50 | 8.37 | | | | | | |
| | | 2-Wire Voice Grade Port (Centrex from diff Serving Wire Center)2,3 Basic Local Area | | | UEP95 | UEPYM | 1.17 | 139.49 | 86.10 | 65.41 | 13.81 | | | | | | |
| | | 2-Wire Voice Grade Port, Diff Serving Wire Center 2,3 - 800 Service Term - Basic Local Area | | | UEP95 | UEPYZ | 1.17 | 139.49 | 86.10 | 65.41 | 13.81 | | | | | | |
| | | 2-Wire Voice Grade Port terminated in on Megalink or equivalent - Basic Local Area | | | UEP95 | UEPY9 | 1.17 | 53.31 | 26.46 | 27.50 | 8.37 | | | | | | |
| | | 2-Wire Voice Grade Port Terminated on 800 Service Term - Basic Local Area | | | UEP95 | UEPY2 | 1.17 | 53.31 | 26.46 | 27.50 | 8.37 | | | | | | |
| | **AL, KY, LA, MS, SC, & TN Only** | | | | | | | | | | | | | | | | |
| | **FL & GA Only** | | | | | | | | | | | | | | | | |
| | | 2-Wire Voice Grade Port (Centrex ) | | | UEP95 | UEPHA | 1.17 | 53.31 | 26.46 | 27.50 | 8.37 | | | | | | |
| | | 2-Wire Voice Grade Port (Centrex 800 termination) | | | UEP95 | UEPHB | 1.17 | 53.31 | 26.46 | 27.50 | 8.37 | | | | | | |
| | | 2-Wire Voice Grade Port (Centrex with Caller ID)1 | | | UEP95 | UEPHH | 1.17 | 53.31 | 26.46 | 27.50 | 8.37 | | | | | | |
| | | 2-Wire Voice Grade Port (Centrex from diff Serving Wire Center)2,3 | | | UEP95 | UEPHM | 1.17 | 139.49 | 86.10 | 65.41 | 13.81 | | | | | | |
| | | 2-Wire Voice Grade Port, Diff Serving Wire Center - 800 Service Term 2,3 | | | UEP95 | UEPHZ | 1.17 | 139.49 | 86.10 | 65.41 | 13.81 | | | | | | |
| | | 2-Wire Voice Grade Port terminated in on Megalink or equivalent | | | UEP95 | UEPH9 | 1.17 | 53.31 | 26.46 | 27.50 | 8.37 | | | | | | |
| | | 2-Wire Voice Grade Port Terminated on 800 Service Term | | | UEP95 | UEPH2 | 1.17 | 53.31 | 26.46 | 27.50 | 8.37 | | | | | | |
| | **Local Switching** | | | | | | | | | | | | | | | | |
| | | Centrex Intercom Funtionality, per port | | | UEP95 | URECS | 0.7384 | | | | | | | | | | |
| | **Local Number Portability** | | | | | | | | | | | | | | | | |
| | | Local Number Portability (1 per port) | | | UEP95 | LNPCC | 0.35 | | | | | | | | | | |
| | **Features** | | | | | | | | | | | | | | | | |
| | | All Standard Features Offered, per port | | | UEP95 | UEPVF | 2.26 | | | | | | | | | | |
| | | All Select Features Offered, per port | | | UEP95 | UEPVS | 0.00 | 370.70 | | | | | | | | | |
| | | All Centrex Control Features Offered, per port | | | UEP95 | UEPVC | 2.26 | | | | | | | | | | |
| | **NARS** | | | | | | | | | | | | | | | | |
| | | Unbundled Network Access Register - Combination | | | UEP95 | UARCX | 0.00 | 0.00 | 0.00 | 0.00 | 0.00 | | | | | | |
| | | Unbundled Network Access Register - Indial | | | UEP95 | UAR1X | 0.00 | 0.00 | 0.00 | 0.00 | 0.00 | | | | | | |
| | | Unbundled Network Access Register - Outdial | | | UEP95 | UAROX | 0.00 | 0.00 | 0.00 | 0.00 | 0.00 | | | | | | |
| | **Miscellaneous Terminations** | | | | | | | | | | | | | | | | |
| | **2-Wire Trunk Side** | | | | | | | | | | | | | | | | |
| | | Trunk Side Terminations, each | | | UEP95 | CEND6 | 8.73 | | | | | | | | | | |

| UNBUNDLED NETWORK ELEMENTS - Florida | | | | | | | | | | | | | Attachment: 2 | | Exhibit: A | |
|---|---|---|---|---|---|---|---|---|---|---|---|---|---|---|---|---|
| CATEGORY | RATE ELEMENTS | Interim | Zone | BCS | USOC | RATES ($) | | | | | Svc Order Submitted Elec per LSR | Svc Order Submitted Manually per LSR | Incremental Charge - Manual Svc Order vs. Electronic-1st | Incremental Charge - Manual Svc Order vs. Electronic-Add'l | Incremental Charge - Manual Svc Order vs. Electronic-Disc 1st | Incremental Charge - Manual Svc Order vs. Electronic-Disc Add'l |
| | | | | | | Rec | Nonrecurring | | Nonrecurring Disconnect | | OSS Rates ($) | | | | | |
| | | | | | | | First | Add'l | First | Add'l | SOMEC | SOMAN | SOMAN | SOMAN | SOMAN | SOMAN |
| 4-Wire Digital (1.544 Megabits) | | | | | | | | | | | | | | | | |
| | DS1 Circuit Terminations, each | | | UEP95 | M1HD1 | 54.95 | | | | | | | | | | |
| | DS0 Channels Activated, each | | | UEP95 | M1HDO | 0.00 | 15.69 | | | | | | | | | |
| Interoffice Channel Mileage - 2-Wire | | | | | | | | | | | | | | | | |
| | Interoffice Channel Facilities Termination | | | UEP95 | M1GBC | 25.32 | | | | | | | | | | |
| | Interoffice Channel mileage, per mile or fraction of mile | | | UEP95 | M1GBM | 0.0091 | | | | | | | | | | |
| Feature Activations (DS0) Centrex Loops on Channelized DS1 Service | | | | | | | | | | | | | | | | |
| D4 Channel Bank Feature Activations | | | | | | | | | | | | | | | | |
| | Feature Activation on D-4 Channel Bank Centrex Loop Slot | | | UEP95 | 1PQWS | 0.66 | | | | | | | | | | |
| | Feature Activation on D-4 Channel Bank FX line Side Loop Slot | | | UEP95 | 1PQW6 | 0.66 | | | | | | | | | | |
| | Feature Activation on D-4 Channel Bank FX Trunk Side Loop Slot | | | UEP95 | 1PQW7 | 0.66 | | | | | | | | | | |
| | Feature Activation on D-4 Channel Bank Centrex Loop Slot - Different Wire Center | | | UEP95 | 1PQWP | 0.66 | | | | | | | | | | |
| | Feature Activation on D-4 Channel Bank Private Line Loop Slot | | | UEP95 | 1PQWV | 0.66 | | | | | | | | | | |
| | Feature Activation on D-4 Channel Bank Tjie Line/Trunk Loop Slot | | | UEP95 | 1PQWQ | 0.66 | | | | | | | | | | |
| | Feature Activation on D-4 Channel Bank WATS Loop Slot | | | UEP95 | 1PQWA | 0.66 | | | | | | | | | | |
| Non-Recurring Charges (NRC) Associated with UNE-P Centrex | | | | | | | | | | | | | | | | |
| | NRC Conversion Currently Combined Switch-As-Is with allowed changes, per port | | | UEP95 | USAC2 | 0.00 | 21.50 | 8.42 | | | | | | | | |
| | Conversion of Existing Centrex Common Block, each | | | UEP95 | USACN | | 5.17 | 8.32 | | | | | | | | |
| | New Centrex Standard Common Block | | | UEP95 | M1ACS | 0.00 | 618.82 | | | | | | | | | |
| | New Centrex Customized Common Block | | | UEP95 | M1ACC | 0.00 | 618.82 | | | | | | | | | |
| | NAR Establishment Charge, Per Occasion | | | UEP95 | URECA | 0.00 | 66.48 | | | | | | | | | |
| Additional Non-Recurring Charges (NRC) | | | | | | | | | | | | | | | | |
| | Unbundled Miscellaneous Rate Element, Tag Loop at End Use Premise | | | UEP95 | URETL | | 8.33 | 0.83 | | | | | | | | |
| | Unbundled Miscellaneous Rate Element, Tag Design Loop at End Use Premise | | | UEP95 | URETN | | 11.21 | 1.10 | | | | | | | | |
| UNE-P CENTREX - DMS100 (Valid in All States) | | | | | | | | | | | | | | | | |
| 2-Wire VG Loop/2-Wire Voice Grade Port (Centrex) Combo | | | | | | | | | | | | | | | | |
| UNE Port/Loop Combination Rates (Non-Design) | | | | | | | | | | | | | | | | |
| | 2-Wire VG Loop/2-Wire Voice Grade Port (Centrex) Port Combo - Non-Design | | 1 | UEP9D | | 10.94 | | | | | | | | | | |
| | 2-Wire VG Loop/2-Wire Voice Grade Port (Centrex)Port Combo - Non-Design | | 2 | UEP9D | | 15.05 | | | | | | | | | | |
| | 2-Wire VG Loop/2-Wire Voice Grade Port (Centrex)Port Combo - Non-Design | | 3 | UEP9D | | 25.80 | | | | | | | | | | |
| UNE Port/Loop Combination Rates (Design) | | | | | | | | | | | | | | | | |
| | 2-Wire VG Loop/2-Wire Voice Grade Port (Centrex) Port Combo - Design | | 1 | UEP9D | | 13.41 | | | | | | | | | | |
| | 2-Wire VG Loop/2-Wire Voice Grade Port (Centrex)Port Combo - Design | | 2 | UEP9D | | 18.57 | | | | | | | | | | |
| | 2-Wire VG Loop/2-Wire Voice Grade Port (Centrex)Port Combo - Design | | 3 | UEP9D | | 32.04 | | | | | | | | | | |
| UNE Loop Rate | | | | | | | | | | | | | | | | |
| | 2-Wire Voice Grade Loop (SL 1) - Zone 1 | | 1 | UEP9D | UECS1 | 9.77 | | | | | | | | | | |
| | 2-Wire Voice Grade Loop (SL 1) - Zone 2 | | 2 | UEP9D | UECS1 | 13.88 | | | | | | | | | | |
| | 2-Wire Voice Grade Loop (SL 1) - Zone 3 | | 3 | UEP9D | UECS1 | 24.63 | | | | | | | | | | |
| | 2-Wire Voice Grade Loop (SL 2) - Zone 1 | | 1 | UEP9D | UECS2 | 12.24 | | | | | | | | | | |
| | 2-Wire Voice Grade Loop (SL 2) - Zone 2 | | 2 | UEP9D | UECS2 | 17.40 | | | | | | | | | | |
| | 2-Wire Voice Grade Loop (SL 2) - Zone 3 | | 3 | UEP9D | UECS2 | 30.87 | | | | | | | | | | |
| UNE Port Rate | | | | | | | | | | | | | | | | |
| ALL STATES | | | | | | | | | | | | | | | | |
| | 2-Wire Voice Grade Port (Centrex ) Basic Local Area | | | UEP9D | UEPYA | 1.17 | | | | | | | | | | |

| UNBUNDLED NETWORK ELEMENTS - Florida | | | | | | | | | | | | | | Attachment: 2 | | Exhibit: A | |
|---|---|---|---|---|---|---|---|---|---|---|---|---|---|---|---|---|---|
| CATEGORY | | RATE ELEMENTS | Interim | Zone | BCS | USOC | RATES ($) | | | | | Svc Order Submitted Elec per LSR | Svc Order Submitted Manually per LSR | Incremental Charge - Manual Svc Order vs. Electronic-1st | Incremental Charge - Manual Svc Order vs. Electronic-Add'l | Incremental Charge - Manual Svc Order vs. Electronic-Disc 1st | Incremental Charge - Manual Svc Order vs. Electronic-Disc Add'l |
| | | | | | | | Rec | Nonrecurring | | Nonrecurring Disconnect | | OSS Rates ($) | | | | | |
| | | | | | | | | First | Add'l | First | Add'l | SOMEC | SOMAN | SOMAN | SOMAN | SOMAN | SOMAN |
| | | 2-Wire Voice Grade Port (Centrex 800 termination)Basic Local Area | | | UEP9D | UEPYB | 1.17 | 53.31 | 26.46 | 27.50 | 8.37 | | | | | | |
| | | 2-Wire Voice Grade Port (Centrex / EBS-PSET)3Basic Local Area | | | UEP9D | UEPYC | 1.17 | 53.31 | 26.46 | 27.50 | 8.37 | | | | | | |
| | | 2-Wire Voice Grade Port (Centrex / EBS-M5009)3Basic Local Area | | | UEP9D | UEPYD | 1.17 | 53.31 | 26.46 | 27.50 | 8.37 | | | | | | |
| | | 2-Wire Voice Grade Port (Centrex / EBS-M5209))3 Basic Local Area | | | UEP9D | UEPYE | 1.17 | 53.31 | 26.46 | 27.50 | 8.37 | | | | | | |
| | | 2-Wire Voice Grade Port (Centrex / EBS-M5112))3 Basic Local Area | | | UEP9D | UEPYF | 1.17 | 53.31 | 26.46 | 27.50 | 8.37 | | | | | | |
| | | 2-Wire Voice Grade Port (Centrex / EBS-M5312))3Basic Local Area | | | UEP9D | UEPYG | 1.17 | 53.31 | 26.46 | 27.50 | 8.37 | | | | | | |
| | | 2-Wire Voice Grade Port (Centrex / EBS-M5008))3 Basic Local Area | | | UEP9D | UEPYT | 1.17 | 53.31 | 26.46 | 27.50 | 8.37 | | | | | | |
| | | 2-Wire Voice Grade Port (Centrex / EBS-M5208))3 Basic Local Area | | | UEP9D | UEPYU | 1.17 | 53.31 | 26.46 | 27.50 | 8.37 | | | | | | |
| | | 2-Wire Voice Grade Port (Centrex / EBS-M5216))3 Basic Local Area | | | UEP9D | UEPYV | 1.17 | 53.31 | 26.46 | 27.50 | 8.37 | | | | | | |
| | | 2-Wire Voice Grade Port (Centrex / EBS-M5316))3 Basic Local Area | | | UEP9D | UEPY3 | 1.17 | 53.31 | 26.46 | 27.50 | 8.37 | | | | | | |
| | | 2-Wire Voice Grade Port (Centrex with Caller ID) Basic Local Area | | | UEP9D | UEPYH | 1.17 | 53.31 | 26.46 | 27.50 | 8.37 | | | | | | |
| | | 2-Wire Voice Grade Port (Centrex/Caller ID/Msg Wtg Lamp Indication))4 Basic Local Area | | | UEP9D | UEPYW | 1.17 | 53.31 | 26.46 | 27.50 | 8.37 | | | | | | |
| | | 2-Wire Voice Grade Port (Centrex/Msg Wtg Lamp Indication))4 Basic Local Area | | | UEP9D | UEPYJ | 1.17 | 53.31 | 26.46 | 27.50 | 8.37 | | | | | | |
| | | 2-Wire Voice Grade Port (Centrex from diff Serving Wire Center) 2,3-Basic Local Area | | | UEP9D | UEPYM | 1.17 | 53.31 | 26.46 | 27.50 | 8.37 | | | | | | |
| | | 2-Wire Voice Grade Port (Centrex/differ SWC /EBS-PSET)2,3,4 Basic Local Area | | | UEP9D | UEPYO | 1.17 | 53.31 | 26.46 | 27.50 | 8.37 | | | | | | |
| | | 2-Wire Voice Grade Port (Centrex/differ SWC /EBS-M5009)2,3,4 Basic Local Area | | | UEP9D | UEPYP | 1.17 | 53.31 | 26.46 | 27.50 | 8.37 | | | | | | |
| | | 2-Wire Voice Grade Port (Centrex/differ SWC /EBS-5209)2,3,4 Basic Local Area | | | UEP9D | UEPYQ | 1.17 | 139.49 | 86.10 | 65.41 | 13.81 | | | | | | |
| | | 2-Wire Voice Grade Port (Centrex/differ SWC /EBS-M5112)2,3,4 Basic Local Area | | | UEP9D | UEPYR | 1.17 | 139.49 | 86.10 | 65.41 | 13.81 | | | | | | |
| | | 2-Wire Voice Grade Port (Centrex/differ SWC /EBS-M5312)2,3,4 Basic Local Area | | | UEP9D | UEPYS | 1.17 | 139.49 | 86.10 | 65.41 | 13.81 | | | | | | |
| | | 2-Wire Voice Grade Port (Centrex/differ SWC /EBS-M5008)2,3,4 Basic Local Area | | | UEP9D | UEPY4 | 1.17 | 139.49 | 86.10 | 65.41 | 13.81 | | | | | | |
| | | 2-Wire Voice Grade Port (Centrex/differ SWC /EBS-M5208)2, 3 Basic Local Area | | | UEP9D | UEPY5 | 1.17 | 139.49 | 86.10 | 65.41 | 13.81 | | | | | | |
| | | 2-Wire Voice Grade Port (Centrex/differ SWC /EBS-M5216)2,3,4 Basic Local Area | | | UEP9D | UEPY6 | 1.17 | 139.49 | 86.10 | 65.41 | 13.81 | | | | | | |
| | | 2-Wire Voice Grade Port (Centrex/differ SWC /EBS-M5316)2,3,4 Basic Local Area | | | UEP9D | UEPY7 | 1.17 | 139.49 | 86.10 | 65.41 | 13.81 | | | | | | |
| | | 2-Wire Voice Grade Port, Diff Serving Wire Center - 800 Service Term 2,3 | | | UEP9D | UEPYZ | 1.17 | 139.49 | 86.10 | 65.41 | 13.81 | | | | | | |
| | | 2-Wire Voice Grade Port terminated in on Megalink or equivalent Basic Local Area | | | UEP9D | UEPY9 | 1.17 | 53.31 | 26.46 | 27.50 | 8.37 | | | | | | |
| | | 2-Wire Voice Grade Port Terminated on 800 Service Term Basic Local Area | | | UEP9D | UEPY2 | 1.17 | 53.31 | 26.46 | 27.50 | 8.37 | | | | | | |
| | FL & GA Only | | | | | | | | | | | | | | | | |
| | | 2-Wire Voice Grade Port (Centrex) | | | UEP9D | UEPHA | 1.17 | 53.31 | 26.46 | 27.50 | 8.37 | | | | | | |
| | | 2-Wire Voice Grade Port (Centrex 800 termination) | | | UEP9D | UEPHB | 1.17 | 53.31 | 26.46 | 27.50 | 8.37 | | | | | | |
| | | 2-Wire Voice Grade Port (Centrex / EBS-PSET)4 | | | UEP9D | UEPHC | 1.17 | 53.31 | 26.46 | 27.50 | 8.37 | | | | | | |
| | | 2-Wire Voice Grade Port (Centrex / EBS-M5009)4 | | | UEP9D | UEPHD | 1.17 | 53.31 | 26.46 | 27.50 | 8.37 | | | | | | |
| | | 2-Wire Voice Grade Port (Centrex / EBS-M5209)4 | | | UEP9D | UEPHE | 1.17 | 53.31 | 26.46 | 27.50 | 8.37 | | | | | | |
| | | 2-Wire Voice Grade Port (Centrex / EBS-M5112)4 | | | UEP9D | UEPHF | 1.17 | 53.31 | 26.46 | 27.50 | 8.37 | | | | | | |

| UNBUNDLED NETWORK ELEMENTS - Florida | | | | | | | | | | | | | | Attachment: 2 | | Exhibit: A | |
|---|---|---|---|---|---|---|---|---|---|---|---|---|---|---|---|---|---|
| CATEGORY | RATE ELEMENTS | Interim | Zone | BCS | USOC | RATES ($) | | | | | Svc Order Submitted Elec per LSR | Svc Order Submitted Manually per LSR | Incremental Charge - Manual Svc Order vs. Electronic-1st | Incremental Charge - Manual Svc Order vs. Electronic-Add'l | Incremental Charge - Manual Svc Order vs. Electronic-Disc 1st | Incremental Charge - Manual Svc Order vs. Electronic-Disc Add'l |
| | | | | | | Rec | Nonrecurring | | Nonrecurring Disconnect | | OSS Rates ($) | | | | | |
| | | | | | | | First | Add'l | First | Add'l | SOMEC | SOMAN | SOMAN | SOMAN | SOMAN | SOMAN |
| | 2-Wire Voice Grade Port (Centrex / EBS-M5312)4 | | | UEP9D | UEPHG | 1.17 | 53.31 | 26.46 | 27.50 | 8.37 | | | | | | |
| | 2-Wire Voice Grade Port (Centrex / EBS-M5008)4 | | | UEP9D | UEPHT | 1.17 | 53.31 | 26.46 | 27.50 | 8.37 | | | | | | |
| | 2-Wire Voice Grade Port (Centrex / EBS-M5208)4 | | | UEP9D | UEPHU | 1.17 | 53.31 | 26.46 | 27.50 | 8.37 | | | | | | |
| | 2-Wire Voice Grade Port (Centrex / EBS-M5216)4 | | | UEP9D | UEPHV | 1.17 | 53.31 | 26.46 | 27.50 | 8.37 | | | | | | |
| | 2-Wire Voice Grade Port (Centrex / EBS-M5316)4 | | | UEP9D | UEPH3 | 1.17 | 53.31 | 26.46 | 27.50 | 8.37 | | | | | | |
| | 2-Wire Voice Grade Port (Centrex with Caller ID) | | | UEP9D | UEPHH | 1.17 | 53.31 | 26.46 | 27.50 | 8.37 | | | | | | |
| | 2-Wire Voice Grade Port (Centrex/Caller ID/Msg Wtg Lamp Indication)4 | | | UEP9D | UEPHW | 1.17 | 53.31 | 26.46 | 27.50 | 8.37 | | | | | | |
| | 2-Wire Voice Grade Port (Centrex/Msg Wtg Lamp Indication)4 | | | UEP9D | UEPHJ | 1.17 | 53.31 | 26.46 | 27.50 | 8.37 | | | | | | |
| | 2-Wire Voice Grade Port (Centrex from diff Serving Wire Center) 2,3 | | | UEP9D | UEPHM | 1.17 | 139.49 | 86.10 | 65.41 | 13.81 | | | | | | |
| | 2-Wire Voice Grade Port (Centrex/differ SWC /EBS-PSET)2,3,4 | | | UEP9D | UEPHO | 1.17 | 139.49 | 86.10 | 65.41 | 13.81 | | | | | | |
| | 2-Wire Voice Grade Port (Centrex/differ SWC /EBS-M5009)2,3,4 | | | UEP9D | UEPHP | 1.17 | 139.49 | 86.10 | 65.41 | 13.81 | | | | | | |
| | 2-Wire Voice Grade Port (Centrex/differ SWC /EBS-5209)2,3,4 | | | UEP9D | UEPHQ | 1.17 | 139.49 | 86.10 | 65.41 | 13.81 | | | | | | |
| | 2-Wire Voice Grade Port (Centrex/differ SWC /EBS-M5112)2,3,4 | | | UEP9D | UEPHR | 1.17 | 139.49 | 86.10 | 65.41 | 13.81 | | | | | | |
| | 2-Wire Voice Grade Port (Centrex/differ SWC /EBS-M5312)2, 3,4 | | | UEP9D | UEPHS | 1.17 | 139.49 | 86.10 | 65.41 | 13.81 | | | | | | |
| | 2-Wire Voice Grade Port (Centrex/differ SWC /EBS-M5008)2,3,4 | | | UEP9D | UEPH4 | 1.17 | 139.49 | 86.10 | 65.41 | 13.81 | | | | | | |
| | 2-Wire Voice Grade Port (Centrex/differ SWC /EBS-M5208)2,3,4 | | | UEP9D | UEPH5 | 1.17 | 139.49 | 86.10 | 65.41 | 13.81 | | | | | | |
| | 2-Wire Voice Grade Port (Centrex/differ SWC /EBS-M5216)2,3,4 | | | UEP9D | UEPH6 | 1.17 | 139.49 | 86.10 | 65.41 | 13.81 | | | | | | |
| | 2-Wire Voice Grade Port (Centrex/differ SWC /EBS-M5316)2,3,4 | | | UEP9D | UEPH7 | 1.17 | 139.49 | 86.10 | 65.41 | 13.81 | | | | | | |
| | 2-Wire Voice Grade Port, Diff Serving Wire Center - 800 Service Term 2,3 | | | UEP9D | UEPHZ | 1.17 | 139.49 | 86.10 | 65.41 | 13.81 | | | | | | |
| | 2-Wire Voice Grade Port terminated in on Megalink or equivalent | | | UEP9D | UEPH9 | 1.17 | 53.31 | 26.46 | 27.50 | 8.37 | | | | | | |
| | 2-Wire Voice Grade Port Terminated on 800 Service Term | | | UEP9D | UEPH2 | 1.17 | 53.31 | 26.46 | 27.50 | 8.37 | | | | | | |
| **Local Switching** | | | | | | | | | | | | | | | | | |
| | Centrex Intercom Funtionality, per port | | | UEP9D | URECS | 0.7384 | | | | | | | | | | |
| **Local Number Portability** | | | | | | | | | | | | | | | | | |
| | Local Number Portability (1 per port) | | | UEP9D | LNPCC | 0.35 | | | | | | | | | | |
| **Features** | | | | | | | | | | | | | | | | | |
| | All Standard Features Offered, per port | | | UEP9D | UEPVF | 2.26 | | | | | | | | | | |
| | All Select Features Offered, per port | | | UEP9D | UEPVS | 0.00 | 370.70 | | | | | | | | | |
| | All Centrex Control Features Offered, per port | | | UEP9D | UEPVC | 2.26 | | | | | | | | | | |
| **NARS** | | | | | | | | | | | | | | | | | |
| | Unbundled Network Access Register - Combination | | | UEP9D | UARCX | 0.00 | 0.00 | 0.00 | 0.00 | 0.00 | | | | | | |
| | Unbundled Network Access Register - Inward | | | UEP9D | UAR1X | 0.00 | 0.00 | 0.00 | 0.00 | 0.00 | | | | | | |
| | Unbundled Network Access Register - Outdial | | | UEP9D | UAROX | 0.00 | 0.00 | 0.00 | 0.00 | 0.00 | | | | | | |
| **Miscellaneous Terminations** | | | | | | | | | | | | | | | | | |
| **2-Wire Trunk Side** | | | | | | | | | | | | | | | | | |
| | Trunk Side Terminations, each | | | UEP9D | CEND6 | 8.73 | | | | | | | | | | |
| **4-Wire Digital (1.544 Megabits)** | | | | | | | | | | | | | | | | | |
| | DS1 Circuit Terminations, each | | | UEP9D | M1HD1 | 54.95 | | | | | | | | | | |
| | DS0 Channels Activiated per Channel | | | UEP9D | M1HDO | 0.00 | 15.69 | | | | | | | | | |
| **Interoffice Channel Mileage - 2-Wire** | | | | | | | | | | | | | | | | | |
| | Interoffice Channel Facilities Termination | | | UEP9D | M1GBC | 25.32 | | | | | | | | | | |
| | Interoffice Channel mileage, per mile or fraction of mile | | | UEP9D | M1GBM | 0.0091 | | | | | | | | | | |
| **Feature Activations (DS0) Centrex Loops on Channelized DS1 Service** | | | | | | | | | | | | | | | | | |
| **D4 Channel Bank Feature Activations** | | | | | | | | | | | | | | | | | |
| | Feature Activation on D-4 Channel Bank Centrex Loop Slot | | | UEP9D | 1PQWS | 0.66 | | | | | | | | | | |

## UNBUNDLED NETWORK ELEMENTS - Florida

| CATEGORY | RATE ELEMENTS | Interim | Zone | BCS | USOC | RATES ($) | | | | | Svc Order Submitted Elec per LSR | Svc Order Submitted Manually per LSR | Attachment: 2 Incremental Charge - Manual Svc Order vs. Electronic-1st | Attachment: 2 Incremental Charge - Manual Svc Order vs. Electronic-Add'l | Exhibit: A Incremental Charge - Manual Svc Order vs. Electronic-Disc 1st | Exhibit: A Incremental Charge - Manual Svc Order vs. Electronic-Disc Add'l |
|---|---|---|---|---|---|---|---|---|---|---|---|---|---|---|---|---|
| | | | | | | Rec | Nonrecurring | | Nonrecurring Disconnect | | OSS Rates ($) | | | | | |
| | | | | | | | First | Add'l | First | Add'l | SOMEC | SOMAN | SOMAN | SOMAN | SOMAN | SOMAN |
| | Feature Activation on D-4 Channel Bank FX line Side Loop Slot | | | UEP9D | 1PQW6 | 0.66 | | | | | | | | | | |
| | Feature Activation on D-4 Channel Bank FX Trunk Side Loop Slot | | | UEP9D | 1PQW7 | 0.66 | | | | | | | | | | |
| | Feature Activation on D-4 Channel Bank Centrex Loop Slot - Different Wire Center | | | UEP9D | 1PQWP | 0.66 | | | | | | | | | | |
| | Feature Activation on D-4 Channel Bank Private Line Loop Slot | | | UEP9D | 1PQWV | 0.66 | | | | | | | | | | |
| | Feature Activation on D-4 Channel Bank Tjie Line/Trunk Loop Slot | | | UEP9D | 1PQWQ | 0.66 | | | | | | | | | | |
| | Feature Activation on D-4 Channel Bank WATS Loop Slot | | | UEP9D | 1PQWA | 0.66 | | | | | | | | | | |
| | **Non-Recurring Charges (NRC) Associated with UNE-P Centrex** | | | | | | | | | | | | | | | |
| | NRC Conversion Currently Combined Switch-As-Is with allowed changes, per port | | | UEP9D | USAC2 | | 21.50 | 8.42 | | | | | | | | |
| | Conversion of existing Centrex Common Block, each | | | UEP9D | USACN | | 5.17 | 8.32 | | | | | | | | |
| | New Centrex Standard Common Block | | | UEP9D | M1ACS | 0.00 | 618.82 | | | | | | | | | |
| | New Centrex Customized Common Block | | | UEP9D | M1ACC | 0.00 | 618.82 | | | | | | | | | |
| | NAR Establishment Charge, Per Occasion | | | UEP9D | URECA | 0.00 | 66.48 | | | | | | | | | |
| | **Additional Non-Recurring Charges (NRC)** | | | | | | | | | | | | | | | |
| | Unbundled Miscellaneous Rate Element, Tag Loop at End Use Premise | | | UEP9D | URETL | | 8.33 | 0.83 | | | | | | | | |
| | Unbundled Miscellaneous Rate Element, Tag Design Loop at End Use Premise | | | UEP9D | URETN | | 11.21 | 1.10 | | | | | | | | |
| | **UNE-P CENTREX - EWSD (Valid in AL, FL, KY, LA, MS & TN)** | | | | | | | | | | | | | | | |
| | **2-Wire VG Loop/2-Wire Voice Grade Port (Centrex) Combo** | | | | | | | | | | | | | | | |
| | **UNE Port/Loop Combination Rates (Non-Design)** | | | | | | | | | | | | | | | |
| | 2-Wire VG Loop/2-Wire Voice Grade Port (Centrex) Port Combo - Non-Design | | 1 | UEP9E | | 10.94 | | | | | | | | | | |
| | 2-Wire VG Loop/2-Wire Voice Grade Port (Centrex)Port Combo - Non-Design | | 2 | UEP9E | | 15.05 | | | | | | | | | | |
| | 2-Wire VG Loop/2-Wire Voice Grade Port (Centrex)Port Combo - Non-Design | | 3 | UEP9E | | 25.80 | | | | | | | | | | |
| | **UNE Port/Loop Combination Rates (Design)** | | | | | | | | | | | | | | | |
| | 2-Wire VG Loop/2-Wire Voice Grade Port (Centrex) Port Combo - Design | | 1 | UEP9E | | 13.41 | | | | | | | | | | |
| | 2-Wire VG Loop/2-Wire Voice Grade Port (Centrex)Port Combo - Design | | 2 | UEP9E | | 18.57 | | | | | | | | | | |
| | 2-Wire VG Loop/2-Wire Voice Grade Port (Centrex)Port Combo - Design | | 3 | UEP9E | | 32.04 | | | | | | | | | | |
| | **UNE Loop Rate** | | | | | | | | | | | | | | | |
| | 2-Wire Voice Grade Loop (SL 1) - Zone 1 | | 1 | UEP9E | UECS1 | 9.77 | | | | | | | | | | |
| | 2-Wire Voice Grade Loop (SL 1) - Zone 2 | | 2 | UEP9E | UECS1 | 13.88 | | | | | | | | | | |
| | 2-Wire Voice Grade Loop (SL 1) - Zone 3 | | 3 | UEP9E | UECS1 | 24.63 | | | | | | | | | | |
| | 2-Wire Voice Grade Loop (SL 2) - Zone 1 | | 1 | UEP9E | UECS2 | 12.24 | | | | | | | | | | |
| | 2-Wire Voice Grade Loop (SL 2) - Zone 2 | | 2 | UEP9E | UECS2 | 17.40 | | | | | | | | | | |
| | 2-Wire Voice Grade Loop (SL 2) - Zone 3 | | 3 | UEP9E | UECS2 | 30.87 | | | | | | | | | | |
| | **UNE Port Rate** | | | | | | | | | | | | | | | |
| | **AL, FL, KY, LA, MS, & TN only** | | | | | | | | | | | | | | | |
| | 2-Wire Voice Grade Port (Centrex ) Basic Local Area | | | UEP9E | UEPYA | 1.17 | 53.31 | 26.46 | 27.50 | 8.37 | | | | | | |
| | 2-Wire Voice Grade Port (Centrex 800 termination)Basic Local Area | | | UEP9E | UEPYB | 1.17 | 53.31 | 26.46 | 27.50 | 8.37 | | | | | | |
| | 2-Wire Voice Grade Port (Centrex with Caller ID)1Basic Local Area | | | UEP9E | UEPYH | 1.17 | 53.31 | 26.46 | 27.50 | 8.37 | | | | | | |
| | 2-Wire Voice Grade Port (Centrex from diff Serving Wire Center)2,3 Basic Local Area | | | UEP9E | UEPYM | 1.17 | 139.49 | 86.10 | 65.41 | 13.81 | | | | | | |
| | 2-Wire Voice Grade Port, Diff Serving Wire Center 2,3 - 800 Service Term - Basic Local Area | | | UEP9E | UEPYZ | 1.17 | 139.49 | 86.10 | 65.41 | 13.81 | | | | | | |
| | 2-Wire Voice Grade Port terminated in on Megalink or equivalent - Basic Local Area | | | UEP9E | UEPY9 | 1.17 | 53.31 | 26.46 | 27.50 | 8.37 | | | | | | |

## UNBUNDLED NETWORK ELEMENTS - Florida

| CATEGORY | RATE ELEMENTS | Interim | Zone | BCS | USOC | RATES ($) | | | | | Svc Order Submitted Elec per LSR | Svc Order Submitted Manually per LSR | Attachment: 2 Incremental Charge - Manual Svc Order vs. Electronic-1st | Attachment: 2 Incremental Charge - Manual Svc Order vs. Electronic-Add'l | Exhibit: A Incremental Charge - Manual Svc Order vs. Electronic-Disc 1st | Exhibit: A Incremental Charge - Manual Svc Order vs. Electronic-Disc Add'l |
|---|---|---|---|---|---|---|---|---|---|---|---|---|---|---|---|---|
| | | | | | | Rec | Nonrecurring | | Nonrecurring Disconnect | | OSS Rates ($) | | | | | |
| | | | | | | | First | Add'l | First | Add'l | SOMEC | SOMAN | SOMAN | SOMAN | SOMAN | SOMAN |
| | 2-Wire Voice Grade Port Terminated on 800 Service Term - Basic Local Area | | | UEP9E | UEPY2 | 1.17 | 53.31 | 26.46 | 27.50 | 8.37 | | | | | | |
| **Florida Only** | | | | | | | | | | | | | | | | |
| | 2-Wire Voice Grade Port (Centrex ) | | | UEP9E | UEPHA | 1.17 | 53.31 | 26.46 | 27.50 | 8.37 | | | | | | |
| | 2-Wire Voice Grade Port (Centrex 800 termination) | | | UEP9E | UEPHB | 1.17 | 53.31 | 26.46 | 27.50 | 8.37 | | | | | | |
| | 2-Wire Voice Grade Port (Centrex with Caller ID)1 | | | UEP9E | UEPHH | 1.17 | 53.31 | 26.46 | 27.50 | 8.37 | | | | | | |
| | 2-Wire Voice Grade Port (Centrex from diff Serving Wire Center)2,3 | | | UEP9E | UEPHM | 1.17 | 139.49 | 86.10 | 65.41 | 13.81 | | | | | | |
| | 2-Wire Voice Grade Port, Diff Serving Wire Center - 800 Service Term 2,3 | | | UEP9E | UEPHZ | 1.17 | 139.49 | 86.10 | 65.41 | 13.81 | | | | | | |
| | 2-Wire Voice Grade Port terminated in on Megalink or equivalent | | | UEP9E | UEPH9 | 1.17 | 53.31 | 26.46 | 27.50 | 8.37 | | | | | | |
| | 2-Wire Voice Grade Port Terminated on 800 Service Term | | | UEP9E | UEPH2 | 1.17 | 53.31 | 26.46 | 27.50 | 8.37 | | | | | | |
| **Local Switching** | | | | | | | | | | | | | | | | |
| | Centrex Intercom Funtionality, per port | | | UEP9E | URECS | 0.7384 | | | | | | | | | | |
| **Local Number Portability** | | | | | | | | | | | | | | | | |
| | Local Number Portability (1 per port) | | | UEP9E | LNPCC | 0.35 | | | | | | | | | | |
| **Features** | | | | | | | | | | | | | | | | |
| | All Standard Features Offered, per port | | | UEP9E | UEPVF | 2.26 | | | | | | | | | | |
| | All Select Features Offered, per port | | | UEP9E | UEPVS | 0.00 | 370.70 | | | | | | | | | |
| | All Centrex Control Features Offered, per port | | | UEP9E | UEPVC | 2.26 | | | | | | | | | | |
| **NARS** | | | | | | | | | | | | | | | | |
| | Unbundled Network Access Register - Combination | | | UEP9E | UARCX | 0.00 | 0.00 | 0.00 | 0.00 | 0.00 | | | | | | |
| | Unbundled Network Access Register - Indial | | | UEP9E | UAR1X | 0.00 | 0.00 | 0.00 | 0.00 | 0.00 | | | | | | |
| | Unbundled Network Access Register - Outdial | | | UEP9E | UAROX | 0.00 | 0.00 | 0.00 | 0.00 | 0.00 | | | | | | |
| **Miscellaneous Terminations** | | | | | | | | | | | | | | | | |
| **2-Wire Trunk Side** | | | | | | | | | | | | | | | | |
| | Trunk Side Terminations, each | | | UEP9E | CEND6 | 8.73 | | | | | | | | | | |
| **4-Wire Digital (1.544 Megabits)** | | | | | | | | | | | | | | | | |
| | DS1 Circuit Terminations, each | | | UEP9E | M1HD1 | 54.95 | | | | | | | | | | |
| | DS0 Channel Activated Per Channel | | | UEP9E | M1HDO | 0.00 | 15.69 | | | | | | | | | |
| **Interoffice Channel Mileage - 2-Wire** | | | | | | | | | | | | | | | | |
| | Interoffice Channel Facilities Termination | | | UEP9E | M1GBC | 25.32 | | | | | | | | | | |
| | Interoffice Channel mileage, per mile or fraction of mile | | | UEP9E | M1GBM | 0.0091 | | | | | | | | | | |
| **Feature Activations (DS0) Centrex Loops on Channelized DS1 Service** | | | | | | | | | | | | | | | | |
| **D4 Channel Bank Feature Activations** | | | | | | | | | | | | | | | | |
| | Feature Activation on D-4 Channel Bank Centrex Loop Slot | | | UEP9E | 1PQWS | 0.66 | | | | | | | | | | |
| | Feature Activation on D-4 Channel Bank FX line Side Loop Slot | | | UEP9E | 1PQW6 | 0.66 | | | | | | | | | | |
| | Feature Activation on D-4 Channel Bank FX Trunk Side Loop Slot | | | UEP9E | 1PQW7 | 0.66 | | | | | | | | | | |
| | Feature Activation on D-4 Channel Bank Centrex Loop Slot - Different Wire Center | | | UEP9E | 1PQWP | 0.66 | | | | | | | | | | |
| | Feature Activation on D-4 Channel Bank Private Line Loop Slot | | | UEP9E | 1PQWV | 0.66 | | | | | | | | | | |
| | Feature Activation on D-4 Channel Bank Tjie Line/Trunk Loop Slot | | | UEP9E | 1PQWQ | 0.66 | | | | | | | | | | |
| | Feature Activation on D-4 Channel Bank WATS Loop Slot | | | UEP9E | 1PQWA | 0.66 | | | | | | | | | | |
| **Non-Recurring Charges (NRC) Associated with UNE-P Centrex** | | | | | | | | | | | | | | | | |
| | NRC Conversion Currently Combined Switch-As-Is with allowed changes, per port | | | UEP9E | USAC2 | | 21.50 | 8.42 | | | | | | | | |
| | Conversion of Existing Centrex Common Block, each | | | UEP9E | USACN | | 5.17 | 8.32 | | | | | | | | |
| | New Centrex Standard Common Block | | | UEP9E | M1ACS | 0.00 | 618.82 | | | | | | | | | |
| | New Centrex Customized Common Block | | | UEP9E | M1ACC | 0.00 | 618.82 | | | | | | | | | |
| | NAR Establishment Charge, Per Occasion | | | UEP9E | URECA | 0.00 | 66.48 | | | | | | | | | |
| **Additional Non-Recurring Charges (NRC)** | | | | | | | | | | | | | | | | |
| | Unbundled Miscellaneous Rate Element, Tag Loop at End Use Premise | | | UEP9E | URETL | | 8.33 | 0.83 | | | | | | | | |

| UNBUNDLED NETWORK ELEMENTS - Florida | | | | | | | | | | | | | | Attachment: 2 | | Exhibit: A | |
|---|---|---|---|---|---|---|---|---|---|---|---|---|---|---|---|---|---|
| CATEGORY | | RATE ELEMENTS | Interim | Zone | BCS | USOC | RATES ($) | | | | | Svc Order Submitted Elec per LSR | Svc Order Submitted Manually per LSR | Incremental Charge - Manual Svc Order vs. Electronic- 1st | Incremental Charge - Manual Svc Order vs. Electronic- Add'l | Incremental Charge - Manual Svc Order vs. Electronic- Disc 1st | Incremental Charge - Manual Svc Order vs. Electronic- Disc Add'l |
| | | | | | | | Rec | Nonrecurring | | Nonrecurring Disconnect | | OSS Rates ($) | | | | | |
| | | | | | | | | First | Add'l | First | Add'l | SOMEC | SOMAN | SOMAN | SOMAN | SOMAN | SOMAN |
| | | Unbundled Miscellaneous Rate Element, Tag Design Loop at End Use Premise | | | UEP9E | URETN | | 11.21 | 1.10 | | | | | | | | |
| | Note 1 - Required Port for Centrex Control in 1AESS, 5ESS & EWSD | | | | | | | | | | | | | | | | |
| | Note 2 - Requres Interoffice Channel Mileage | | | | | | | | | | | | | | | | |
| | Note 3 - Installation is combination of Installation charge for SL2 Loop and Port | | | | | | | | | | | | | | | | |
| | Note 4 - Requires Specific Customer Premises Equipment | | | | | | | | | | | | | | | | |
| | Note: Rates displaying an "R" in Interim column are interim and subject to rate true-up as set forth in General Terms and Conditions. | | | | | | | | | | | | | | | | |

| UNBUNDLED NETWORK ELEMENTS - Georgia | | | | | | | | | | | | | | Attachment: 2 | | Exhibit: A | |
|---|---|---|---|---|---|---|---|---|---|---|---|---|---|---|---|---|---|
| CATEGORY | | RATE ELEMENTS | Interim | Zone | BCS | USOC | RATES ($) | | | | | Svc Order Submitted Elec per LSR | Svc Order Submitted Manually per LSR | Incremental Charge - Manual Svc Order vs. Electronic-1st | Incremental Charge - Manual Svc Order vs. Electronic-Add'l | Incremental Charge - Manual Svc Order vs. Electronic-Disc 1st | Incremental Charge - Manual Svc Order vs. Electronic-Disc Add'l |
| | | | | | | | Rec | Nonrecurring | | Nonrecurring Disconnect | | OSS Rates ($) | | | | | |
| | | | | | | | | First | Add'l | First | Add'l | SOMEC | SOMAN | SOMAN | SOMAN | SOMAN | SOMAN |
| | The "Zone" shown in the sections for stand-alone loops or loops as part of a combination refers to Geographically Deaveraged UNE Zones. To view Geographically Deaveraged UNE Zone Designations by Central Office, refer to Internet Website: http://www.interconnection.bellsouth.com/become_a_clec/html/interconnection.htm | | | | | | | | | | | | | | | | |
| OPERATIONAL SUPPORT SYSTEMS (OSS) - "REGIONAL RATES" | | | | | | | | | | | | | | | | | |
| | NOTE: (1) CLEC should contact its contract negotiator if it prefers the "state specific" OSS charges as ordered by the State Commissions. The OSS charges currently contained in this rate exhibit are the BellSouth "regional" service ordering charges. CLEC may elect either the state specific Commission ordered rates for the service ordering charges, or CLEC may elect the regional service ordering charge, however, CLEC can not obtain a mixture of the two regardless if CLEC has a interconnection contract established in each of the 9 states. | | | | | | | | | | | | | | | | |
| | NOTE: (2) Any element that can be ordered electronically will be billed according to the SOMEC rate listed in this category. Please refer to BellSouth's Local Ordering Handbook (LOH) to determine if a product can be ordered electronically. For those elements that cannot be ordered electronically at present per the LOH, the listed SOMEC rate in this category reflects the charge that would be billed to a CLEC once electronic ordering capabilities come on-line for that element. Otherwise, the manual ordering charge, SOMAN, will be applied to a CLECs bill when it submits an LSR to BellSouth. | | | | | | | | | | | | | | | | |
| | | OSS - Electronic Service Order Charge, Per Local Service Request (LSR) - UNE Only | | | | SOMEC | | 3.50 | 0.00 | 3.50 | 0.00 | | | | | | |
| | | OSS - Manual Service Order Charge, Per Local Service Request (LSR) - UNE Only | | | | SOMAN | | 11.73 | 0.00 | 6.13 | 0.00 | | | | | | |
| UNE SERVICE DATE ADVANCEMENT CHARGE | | | | | | | | | | | | | | | | | |
| | NOTE: The Expedite charge will be maintained commensurate with BellSouth's FCC No.1 Tariff, Section 5 as applicable. | | | | | | | | | | | | | | | | |
| | | UNE Expedite Charge per Circuit or Line Assignable USOC, per Day | | | UAL, UEANL, UCL, UEF, UDC, UDF, UEQ, UDL, UENTW, UDN, UEA, UHL, ULC, USL, U1T12, U1T48, U1TD1, U1TD3, U1TDX, U1TO3, U1TS1, U1TVX, UC1BC, UC1BL, UC1CC, UC1CL, UC1DC, UC1DL, UC1EC, UC1EL, UC1FC, UC1FL, UC1GC, UC1GL, UC1HC, UC1HL, UDL12, UDL48, UDLO3, UDLSX, UE3, ULD12, ULD48, ULDD1, ULDD3, ULDDX, ULDO3, ULDS1, ULDVX, UNC1X, UNC3X, UNCDX, UNCNX, UNCSX, UNCVX, UNLD1, UNLD3, UXTD1, UXTD3, UXTS1, U1TUC, U1TUD, U1TUB, U1TUA | SDASP | | 200.00 | | | | | | | | | |
| UNBUNDLED EXCHANGE ACCESS LOOP | | | | | | | | | | | | | | | | | |
| | 2-WIRE ANALOG VOICE GRADE LOOP | | | | | | | | | | | | | | | | |
| | | 2-Wire Analog Voice Grade Loop - Service Level 1- Zone 1 | | 1 | UEANL | UEAL2 | 10.51 | 40.02 | 9.99 | 5.61 | 1.72 | | | | | | |
| | | 2-Wire Analog Voice Grade Loop - Service Level 1- Zone 2 | | 2 | UEANL | UEAL2 | 15.85 | 40.02 | 9.99 | 5.61 | 1.72 | | | | | | |
| | | 2-Wire Analog Voice Grade Loop - Service Level 1- Zone 3 | | 3 | UEANL | UEAL2 | 31.97 | 40.02 | 9.99 | 5.61 | 1.72 | | | | | | |
| | | 2-Wire Analog Voice Grade Loop - Service Level 1- Zone 1 | | 1 | UEANL | UEASL | 10.51 | 40.02 | 9.99 | 5.61 | 1.72 | | | | | | |
| | | 2-Wire Analog Voice Grade Loop - Service Level 1- Zone 2 | | 2 | UEANL | UEASL | 15.85 | 40.02 | 9.99 | 5.61 | 1.72 | | | | | | |
| | | 2-Wire Analog Voice Grade Loop - Service Level 1- Zone 3 | | 3 | UEANL | UEASL | 31.97 | 40.02 | 9.99 | 5.61 | 1.72 | | | | | | |
| | | Unbundled Miscellaneous Rate Element, Tag Loop at End User Premise | | | UEANL | URETL | | 8.33 | 0.83 | | | | | | | | |
| | | Loop Testing - Basic 1st Half Hour | | | UEANL | URET1 | | 25.12 | 25.12 | | | | | | | | |
| | | Loop Testing - Basic Additional Half Hour | | | UEANL | URETA | | 13.62 | 13.62 | | | | | | | | |

## UNBUNDLED NETWORK ELEMENTS - Georgia

| CATEGORY | RATE ELEMENTS | Interim | Zone | BCS | USOC | RATES ($) | | | | | Svc Order Submitted Elec per LSR | Svc Order Submitted Manually per LSR | Attachment: 2 Incremental Charge - Manual Svc Order vs. Electronic-1st | Attachment: 2 Incremental Charge - Manual Svc Order vs. Electronic-Add'l | Exhibit: A Incremental Charge - Manual Svc Order vs. Electronic-Disc 1st | Exhibit: A Incremental Charge - Manual Svc Order vs. Electronic-Disc Add'l |
|---|---|---|---|---|---|---|---|---|---|---|---|---|---|---|---|---|
| | | | | | | Rec | Nonrecurring | | Nonrecurring Disconnect | | OSS Rates ($) | | | | | |
| | | | | | | | First | Add'l | First | Add'l | SOMEC | SOMAN | SOMAN | SOMAN | SOMAN | SOMAN |
| | CLEC to CLEC Conversion Charge Without Outside Dispatch (UVL-SL1) | | | UEANL | UREWO | | 15.75 | 8.92 | | | | | | | | |
| | Unbundled Voice Loop, Non-Design Voice Loop, billing for BST providing make-up (Engineering Information - E.I.) | | | UEANL | UEANM | | 7.30 | 7.30 | | | | | | | | |
| | Manual Order Coordiantion for UVL-SL1s (per loop) | | | UEANL | UEAMC | | 18.92 | 18.92 | | | | | | | | |
| | Order Coordination for Specified Conversion Time for UVL-SL1 (per LSR) | | | UEANL | OCOSL | | 57.79 | | | | | | | | | |
| | **2-WIRE UNBUNDLED COPPER LOOP - NON-DESIGNED** | | | | | | | | | | | | | | | |
| | 2 Wire Unbundled Copper Loop Non-Designed- Zone 1 | | 1 | UEQ | UEQ2X | 11.02 | 44.69 | 22.40 | 0.00 | 0.00 | | | | | | |
| | 2 Wire Unbundled Copper Loop Non-Designed- Zone 2 | | 2 | UEQ | UEQ2X | 12.72 | 44.69 | 22.40 | 0.00 | 0.00 | | | | | | |
| | 2 Wire Unbundled Copper Loop Non-Designed-Zone 3 | | 3 | UEQ | UEQ2X | 20.22 | 44.69 | 22.40 | 0.00 | 0.00 | | | | | | |
| | Unbundled Miscellaneous Rate Element, Tag Loop at End User Premise | | | UEQ | URETL | | 8.33 | 0.83 | | | | | | | | |
| | Manual Order Coordination 2 Wire Unbundled Copper Loop - Non-Designed (per loop) | | | UEQ | USBMC | | 18.92 | 18.92 | | | | | | | | |
| | Unbundled Copper Loop, Non-Design Copper Loop, billing for BST providing make-up (Engineering Information - E.I.) | | | UEQ | UEQMU | | 7.30 | 7.30 | | | | | | | | |
| | Loop Testing - Basic 1st Half Hour | | | UEQ | URET1 | | 25.12 | 25.12 | | | | | | | | |
| | Loop Testing - Basic Additional Half Hour | | | UEQ | URETA | | 13.62 | 13.62 | | | | | | | | |
| | CLEC to CLEC Conversion Charge Without Outside Dispatch (UCL-ND) | | | UEQ | UREWO | | 14.25 | 7.42 | | | | | | | | |
| **UNBUNDLED EXCHANGE ACCESS LOOP** | | | | | | | | | | | | | | | | |
| | **2-WIRE ANALOG VOICE GRADE LOOP** | | | | | | | | | | | | | | | |
| | **UNE Loop Rates for Line Splitting (In Ga. PSC ordered the line splitting loop USOCs match the lower port- loop combo rates UEPLX)** | | | | | | | | | | | | | | | |
| | 2-Wire Voice Grade Loop (SL1) for Line Splitting - Zone 1 | I | 1 | UEPSR UEPSB | UEALS | 9.56 | 10.05 | 7.36 | 1.37 | 1.28 | | | | | | |
| | 2-Wire Voice Grade Loop (SL1) for Line Splitting - Zone 1 | I | 1 | UEPSR UEPSB | UEABS | 9.56 | 10.05 | 7.36 | 1.37 | 1.28 | | | | | | |
| | 2-Wire Voice Grade Loop (SL1) for Line Splitting - Zone 2 | I | 2 | UEPSR UEPSB | UEALS | 14.86 | 10.05 | 7.36 | 1.37 | 1.28 | | | | | | |
| | 2-Wire Voice Grade Loop (SL1) for Line Splitting - Zone 2 | I | 2 | UEPSR UEPSB | UEABS | 14.86 | 10.05 | 7.36 | 1.37 | 1.28 | | | | | | |
| | 2-Wire Voice Grade Loop (SL1)for Line Splitting - Zone 3 | I | 3 | UEPSR UEPSB | UEALS | 31.66 | 10.05 | 7.36 | 1.37 | 1.28 | | | | | | |
| | 2-Wire Voice Grade Loop (SL1)for Line Splitting - Zone 3 | I | 3 | UEPSR UEPSB | UEABS | 31.66 | 10.05 | 7.36 | 1.37 | 1.28 | | | | | | |
| **UNBUNDLED EXCHANGE ACCESS LOOP** | | | | | | | | | | | | | | | | |
| | **2-WIRE ANALOG VOICE GRADE LOOP** | | | | | | | | | | | | | | | |
| | 2-Wire Analog Voice Grade Loop - Service Level 2 w/Loop or Ground Start Signaling - Zone 1 | | 1 | UEA | UEAL2 | 11.57 | 79.85 | 24.65 | 18.92 | 7.87 | | | | | | |
| | 2-Wire Analog Voice Grade Loop - Service Level 2 w/Loop or Ground Start Signaling - Zone 2 | | 2 | UEA | UEAL2 | 16.95 | 79.85 | 24.65 | 18.92 | 7.87 | | | | | | |
| | 2-Wire Analog Voice Grade Loop - Service Level 2 w/Loop or Ground Start Signaling - Zone 3 | | 3 | UEA | UEAL2 | 33.08 | 79.85 | 24.65 | 18.92 | 7.87 | | | | | | |
| | Order Coordination for Specified Conversion Time (per LSR) | | | UEA | OCOSL | | 57.79 | | | | | | | | | |
| | 2-Wire Analog Voice Grade Loop - Service Level 2 w/Reverse Battery Signaling - Zone 1 | | 1 | UEA | UEAR2 | 11.57 | 79.85 | 24.65 | 18.92 | 7.87 | | | | | | |
| | 2-Wire Analog Voice Grade Loop - Service Level 2 w/Reverse Battery Signaling - Zone 2 | | 2 | UEA | UEAR2 | 16.95 | 79.85 | 24.65 | 18.92 | 7.87 | | | | | | |
| | 2-Wire Analog Voice Grade Loop - Service Level 2 w/Reverse Battery Signaling - Zone 3 | | 3 | UEA | UEAR2 | 33.08 | 79.85 | 24.65 | 18.92 | 7.87 | | | | | | |
| | Order Coordination for Specified Conversion Time (per LSR) | | | UEA | OCOSL | | 57.79 | | | | | | | | | |
| | CLEC to CLEC Conversion Charge without outside dispatch | | | UEA | UREWO | | 87.72 | 36.36 | | | | | | | | |
| | Loop Tagging - Service Level 2 (SL2) | | | UEA | URETL | | 11.19 | 1.10 | | | | | | | | |
| | **4-WIRE ANALOG VOICE GRADE LOOP** | | | | | | | | | | | | | | | |
| | 4-Wire Analog Voice Grade Loop - Zone 1 | | 1 | UEA | UEAL4 | 17.80 | 93.01 | 28.17 | 19.52 | 8.12 | | | | | | |
| | 4-Wire Analog Voice Grade Loop - Zone 2 | | 2 | UEA | UEAL4 | 21.68 | 93.01 | 28.17 | 19.52 | 8.12 | | | | | | |
| | 4-Wire Analog Voice Grade Loop - Zone 3 | | 3 | UEA | UEAL4 | 30.25 | 93.01 | 28.17 | 19.52 | 8.12 | | | | | | |
| | Order Coordination for Specified Conversion Time (per LSR) | | | UEA | OCOSL | | 57.79 | | | | | | | | | |
| | CLEC to CLEC Conversion Charge without outside dispatch | | | UEA | UREWO | | 87.72 | 36.36 | | | | | | | | |
| | **2-WIRE ISDN DIGITAL GRADE LOOP** | | | | | | | | | | | | | | | |
| | 2-Wire ISDN Digital Grade Loop - Zone 1 | | 1 | UDN | U1L2X | 21.89 | 180.06 | 35.25 | 18.23 | 6.97 | | | | | | |
| | 2-Wire ISDN Digital Grade Loop - Zone 2 | | 2 | UDN | U1L2X | 25.27 | 180.06 | 35.25 | 18.23 | 6.97 | | | | | | |
| | 2-Wire ISDN Digital Grade Loop - Zone 3 | | 3 | UDN | U1L2X | 40.17 | 180.06 | 35.25 | 18.23 | 6.97 | | | | | | |
| | Order Coordination For Specified Conversion Time (per LSR) | | | UDN | OCOSL | | 57.79 | | | | | | | | | |

## UNBUNDLED NETWORK ELEMENTS - Georgia

| CATEGORY | RATE ELEMENTS | Interim | Zone | BCS | USOC | RATES ($) | | | | | Svc Order Submitted Elec per LSR | Svc Order Submitted Manually per LSR | Attachment: 2 | | Exhibit: A | |
|---|---|---|---|---|---|---|---|---|---|---|---|---|---|---|---|---|
| | | | | | | | | | | | | | Incremental Charge - Manual Svc Order vs. Electronic-1st | Incremental Charge - Manual Svc Order vs. Electronic-Add'l | Incremental Charge - Manual Svc Order vs. Electronic-Disc 1st | Incremental Charge - Manual Svc Order vs. Electronic-Disc Add'l |
| | | | | | | Rec | Nonrecurring | | Nonrecurring Disconnect | | OSS Rates ($) | | | | | |
| | | | | | | | First | Add'l | First | Add'l | SOMEC | SOMAN | SOMAN | SOMAN | SOMAN | SOMAN |
| | CLEC to CLEC Conversion Charge without outside dispatch | | | UDN | UREWO | | 120.98 | 33.04 | | | | | | | | |
| | **2-WIRE ASYMMETRICAL DIGITAL SUBSCRIBER LINE (ADSL) COMPATIBLE LOOP** | | | | | | | | | | | | | | | |
| | 2 Wire Unbundled ADSL Loop including manual service inquiry & facility reservation - Zone 1 | I | 1 | UAL | UAL2X | 11.23 | 44.69 | 31.55 | 0.00 | 0.00 | | | | | | |
| | 2 Wire Unbundled ADSL Loop including manual service inquiry & facility reservation - Zone 2 | I | 2 | UAL | UAL2X | 12.97 | 44.69 | 31.55 | 0.00 | 0.00 | | | | | | |
| | 2 Wire Unbundled ADSL Loop including manual service inquiry & facility reservation - Zone 3 | I | 3 | UAL | UAL2X | 20.62 | 44.69 | 31.55 | 0.00 | 0.00 | | | | | | |
| | Order Coordination for Specified Conversion Time (per LSR) | | | UAL | OCOSL | | 57.79 | | | | | | | | | |
| | 2 Wire Unbundled ADSL Loop without manual service inquiry & facility reservaton - Zone 1 | I | 1 | UAL | UAL2W | 11.23 | 44.69 | 31.55 | 0.00 | 0.00 | | | | | | |
| | 2 Wire Unbundled ADSL Loop without manual service inquiry & facility reservaton - Zone 2 | I | 2 | UAL | UAL2W | 12.97 | 44.69 | 31.55 | 0.00 | 0.00 | | | | | | |
| | 2 Wire Unbundled ADSL Loop without manual service inquiry & facility reservaton - Zone 3 | I | 3 | UAL | UAL2W | 20.62 | 44.69 | 31.55 | 0.00 | 0.00 | | | | | | |
| | Order Coordination for Specified Conversion Time (per LSR) | | | UAL | OCOSL | | 57.79 | | | | | | | | | |
| | CLEC to CLEC Conversion Charge without outside dispatch | I | | UAL | UREWO | | 44.69 | 29.29 | | | | | | | | |
| | **2-WIRE HIGH BIT RATE DIGITAL SUBSCRIBER LINE (HDSL) COMPATIBLE LOOP** | | | | | | | | | | | | | | | |
| | 2 Wire Unbundled HDSL Loop including manual service inquiry & facility reservation - Zone 1 | I | 1 | UHL | UHL2X | 7.88 | 44.69 | 31.55 | 0.00 | 0.00 | | | | | | |
| | 2 Wire Unbundled HDSL Loop including manual service inquiry & facility reservation - Zone 2 | I | 2 | UHL | UHL2X | 9.09 | 44.69 | 31.55 | 0.00 | 0.00 | | | | | | |
| | 2 Wire Unbundled HDSL Loop including manual service inquiry & facility reservation - Zone 3 | I | 3 | UHL | UHL2X | 14.48 | 44.69 | 31.55 | 0.00 | 0.00 | | | | | | |
| | Order Coordination for Specified Conversion Time (per LSR) | | | UHL | OCOSL | | 57.79 | | | | | | | | | |
| | 2 Wire Unbundled HDSL Loop without manual service inquiry and facility reservation - Zone 1 | I | 1 | UHL | UHL2W | 7.88 | 44.69 | 31.55 | 0.00 | 0.00 | | | | | | |
| | 2 Wire Unbundled HDSL Loop without manual service inquiry and facility reservation - Zone 2 | I | 2 | UHL | UHL2W | 9.09 | 44.69 | 31.55 | 0.00 | 0.00 | | | | | | |
| | 2 Wire Unbundled HDSL Loop without manual service inquiry and facility reservation - Zone 3 | I | 3 | UHL | UHL2W | 14.48 | 44.69 | 31.55 | 0.00 | 0.00 | | | | | | |
| | Order Coordination for Specified Conversion Time (per LSR) | | | UHL | OCOSL | | 57.79 | | | | | | | | | |
| | CLEC to CLEC Conversion Charge without outside dispatch | I | | UHL | UREWO | | 44.69 | 31.55 | | | | | | | | |
| | **4-WIRE HIGH BIT RATE DIGITAL SUBSCRIBER LINE (HDSL) COMPATIBLE LOOP** | | | | | | | | | | | | | | | |
| | 4 Wire Unbundled HDSL Loop including manual service inquiry and facility reservation - Zone 1 | I | 1 | UHL | UHL4X | 10.39 | 44.69 | 31.55 | 0.00 | 0.00 | | | | | | |
| | 4-Wire Unbundled HDSL Loop including manual service inquiry and facility reservation - Zone 2 | I | 2 | UHL | UHL4X | 12.00 | 44.69 | 31.55 | 0.00 | 0.00 | | | | | | |
| | 4-Wire Unbundled HDSL Loop including manual service inquiry and facility reservation - Zone 3 | I | 3 | UHL | UHL4X | 19.07 | 44.69 | 31.55 | 0.00 | 0.00 | | | | | | |
| | Order Coordination for Specified Conversion Time (per LSR) | | | UHL | OCOSL | | 57.79 | | | | | | | | | |
| | 4-Wire Unbundled HDSL Loop without manual service inquiry and facility reservation - Zone 1 | I | 1 | UHL | UHL4W | 10.39 | 44.69 | 31.55 | 0.00 | 0.00 | | | | | | |
| | 4-Wire Unbundled HDSL Loop without manual service inquiry and facility reservation - Zone 2 | I | 2 | UHL | UHL4W | 12.00 | 44.69 | 31.55 | 0.00 | 0.00 | | | | | | |
| | 4-Wire Unbundled HDSL Loop without manual service inquiry and facility reservation - Zone 3 | I | 3 | UHL | UHL4W | 19.07 | 44.69 | 31.55 | 0.00 | 0.00 | | | | | | |
| | Order Coordination for Specified Conversion Time (per LSR) | | | UHL | OCOSL | | 57.79 | | | | | | | | | |
| | CLEC to CLEC Conversion Charge without outside dispatch | I | | UHL | UREWO | | 44.69 | 31.55 | | | | | | | | |
| | **4-WIRE DS1 DIGITAL LOOP** | | | | | | | | | | | | | | | |
| | 4-Wire DS1 Digital Loop - Zone 1 | | 1 | USL | USLXX | 41.02 | 211.93 | 72.49 | 38.24 | 7.20 | | | | | | |
| | 4-Wire DS1 Digital Loop - Zone 2 | | 2 | USL | USLXX | 46.41 | 211.93 | 72.49 | 38.24 | 7.20 | | | | | | |
| | 4-Wire DS1 Digital Loop - Zone 3 | | 3 | USL | USLXX | 62.03 | 211.93 | 72.49 | 38.24 | 7.20 | | | | | | |
| | Order Coordination for Specified Conversion Time (per LSR) | | | USL | OCOSL | | 57.79 | | | | | | | | | |
| | CLEC to CLEC Conversion Charge without outside dispatch | | | USL | UREWO | | 100.91 | 42.97 | | | | | | | | |
| | **4-WIRE 19.2, 56 OR 64 KBPS DIGITAL GRADE LOOP** | | | | | | | | | | | | | | | |
| | 4 Wire Unbundled Digital 19.2 Kbps | | 1 | UDL | UDL19 | 21.86 | 196.66 | 37.00 | 18.82 | 7.20 | | | | | | |
| | 4 Wire Unbundled Digital 19.2 Kbps | | 2 | UDL | UDL19 | 28.36 | 196.66 | 37.00 | 18.82 | 7.20 | | | | | | |
| | 4 Wire Unbundled Digital 19.2 Kbps | | 3 | UDL | UDL19 | 38.22 | 196.66 | 37.00 | 18.82 | 7.20 | | | | | | |

## UNBUNDLED NETWORK ELEMENTS - Georgia

| CATEGORY | RATE ELEMENTS | Interim | Zone | BCS | USOC | RATES ($) | | | | | Svc Order Submitted Elec per LSR | Svc Order Submitted Manually per LSR | Attachment: 2 | | Exhibit: A | |
|---|---|---|---|---|---|---|---|---|---|---|---|---|---|---|---|---|
| | | | | | | | | | | | | | Incremental Charge - Manual Svc Order vs. Electronic-1st | Incremental Charge - Manual Svc Order vs. Electronic-Add'l | Incremental Charge - Manual Svc Order vs. Electronic-Disc 1st | Incremental Charge - Manual Svc Order vs. Electronic-Disc Add'l |
| | | | | | | Rec | Nonrecurring | | Nonrecurring Disconnect | | OSS Rates ($) | | | | | |
| | | | | | | | First | Add'l | First | Add'l | SOMEC | SOMAN | SOMAN | SOMAN | SOMAN | SOMAN |
| | 4 Wire Unbundled Digital Loop 56 Kbps - Zone 1 | | 1 | UDL | UDL56 | 21.86 | 196.66 | 37.00 | 18.82 | 7.20 | | | | | | |
| | 4 Wire Unbundled Digital Loop 56 Kbps - Zone 2 | | 2 | UDL | UDL56 | 28.36 | 196.66 | 37.00 | 18.82 | 7.20 | | | | | | |
| | 4 Wire Unbundled Digital Loop 56 Kbps - Zone 3 | | 3 | UDL | UDL56 | 38.22 | 196.66 | 37.00 | 18.82 | 7.20 | | | | | | |
| | Order Coordination for Specified Conversion Time (per LSR) | | | UDL | OCOSL | | 57.79 | | | | | | | | | |
| | 4 Wire Unbundled Digital Loop 64 Kbps - Zone 1 | | 1 | UDL | UDL64 | 21.86 | 196.66 | 37.00 | 18.82 | 7.20 | | | | | | |
| | 4 Wire Unbundled Digital Loop 64 Kbps - Zone 2 | | 2 | UDL | UDL64 | 28.36 | 196.66 | 37.00 | 18.82 | 7.20 | | | | | | |
| | 4 Wire Unbundled Digital Loop 64 Kbps - Zone 3 | | 3 | UDL | UDL64 | 38.22 | 196.66 | 37.00 | 18.82 | 7.20 | | | | | | |
| | Order Coordination for Specified Conversion Time (per LSR) | | | UDL | OCOSL | | 57.79 | | | | | | | | | |
| | CLEC to CLEC Conversion Charge without outside dispatc h | | | UDL | UREWO | | 101.95 | 49.66 | | | | | | | | |
| | **2-WIRE Unbundled COPPER LOOP** | | | | | | | | | | | | | | | |
| | 2-Wire Unbundled Copper Loop-Designed including manual service inquiry & facility reservation - Zone 1 | I | 1 | UCL | UCLPB | 12.02 | 44.69 | 31.55 | 0.00 | 0.00 | | | | | | |
| | 2-Wire Unbundled Copper Loop-Designed including manual service inquiry & facility reservation - Zone 2 | I | 2 | UCL | UCLPB | 13.88 | 44.69 | 31.55 | 0.00 | 0.00 | | | | | | |
| | 2 Wire Unbundled Copper Loop-Designed including manual service inquiry & facility reservation - Zone 3 | I | 3 | UCL | UCLPB | 22.07 | 44.69 | 31.55 | 0.00 | 0.00 | | | | | | |
| | Order Coordination for Unbundled Copper Loops (per loop) | | | UCL | UCLMC | | 18.92 | 18.92 | | | | | | | | |
| | 2-Wire Unbundled Copper Loop-Designed without manual service inquiry and facility reservation - Zone 1 | I | 1 | UCL | UCLPW | 12.02 | 44.69 | 31.55 | 0.00 | 0.00 | | | | | | |
| | 2-Wire Unbundled Copper Loop-Designed without manual service inquiry and facility reservation - Zone 2 | I | 2 | UCL | UCLPW | 13.88 | 44.69 | 31.55 | 0.00 | 0.00 | | | | | | |
| | 2-Wire Unbundled Copper Loop-Designed without manual service inquiry and facility reservation - Zone 3 | I | 3 | UCL | UCLPW | 22.07 | 44.69 | 31.55 | 0.00 | 0.00 | | | | | | |
| | Order Coordination for Unbundled Copper Loops (per loop) | | | UCL | UCLMC | | 18.92 | 18.92 | | | | | | | | |
| | Order Coordination for Unbundled Copper Loops (per loop) | | | UCL | UCLMC | | 18.92 | 18.92 | | | | | | | | |
| | CLEC to CLEC Conversion Charge without outside dispatch (UCL-Des) | I | | UCL | UREWO | | 44.69 | 31.55 | | | | | | | | |
| | **4-WIRE COPPER LOOP** | | | | | | | | | | | | | | | |
| | 4-Wire Copper Loop-Designed including manual service inquiry and facility reservation - Zone 1 | I | 1 | UCL | UCL4S | 16.65 | 44.69 | 31.55 | 0.00 | 0.00 | | | | | | |
| | 4-Wire Copper Loop-Designed including manual service inquiry and facility reservation - Zone 2 | I | 2 | UCL | UCL4S | 19.22 | 44.69 | 31.55 | 0.00 | 0.00 | | | | | | |
| | 4-Wire Copper Loop-Designed including manual service inquiry and facility reservation - Zone 3 | I | 3 | UCL | UCL4S | 30.55 | 44.69 | 31.55 | 0.00 | 0.00 | | | | | | |
| | Order Coordination for Unbundled Copper Loops (per loop) | | | UCL | UCLMC | | 18.92 | 18.92 | | | | | | | | |
| | 4-Wire Copper Loop-Designed without manual service inquiry and facility reservation - Zone 1 | I | 1 | UCL | UCL4W | 16.65 | 44.69 | 31.55 | 0.00 | 0.00 | | | | | | |
| | 4-Wire Copper Loop-Designed without manual service inquiry and facility reservation - Zone 2 | I | 2 | UCL | UCL4W | 19.22 | 44.69 | 31.55 | 0.00 | 0.00 | | | | | | |
| | 4-Wire Copper Loop-Designed without manual service inquiry and facility reservation - Zone 3 | I | 3 | UCL | UCL4W | 30.55 | 44.69 | 31.55 | 0.00 | 0.00 | | | | | | |
| | Order Coordination for Unbundled Copper Loops (per loop) | | | UCL | UCLMC | | 18.92 | 18.92 | | | | | | | | |
| | CLEC to CLEC conversion Charge without outside dispatch | I | | UCL | UREWO | | 44.69 | 31.55 | | | | | | | | |
| **LOOP MODIFICATION** | | | | | | | | | | | | | | | | |
| | Unbundled Loop Modification, Removal of Load Coils - 2 Wire pair less than or equal to 18k ft, per Unbundled Loop | I | | UAL, UHL, UCL, UEQ, ULS, UEA, UEANL, UEPSR, UEPSB | ULM2L | | 0.00 | 0.00 | | | | | | | | |
| | Unbundled Loop Modification Removal of Load Coils - 4 Wire less than or equal to 18K ft, per Unbundled Loop | I | | UHL, UCL, UEA | ULM4L | | 0.00 | 0.00 | | | | | | | | |
| | Unbundled Loop Modification Removal of Bridged Tap Removal, per Unbundled Loop | | | UAL, UHL, UCL, UEQ, ULS, UEA, UEANL, UEPSR, UEPSB | ULMBT | | 17.91 | | | | | | | | | |
| **SUB-LOOPS** | | | | | | | | | | | | | | | | |
| | **Sub-Loop Distribution** | | | | | | | | | | | | | | | |
| | Sub-Loop - Per Cross Box Location - CLEC Feeder Facility Set-Up | | | UEANL | USBSA | | 255.76 | | | | | | | | | |

| UNBUNDLED NETWORK ELEMENTS - Georgia | | | | | | | | | | | | | | Attachment: 2 | | Exhibit: A | |
|---|---|---|---|---|---|---|---|---|---|---|---|---|---|---|---|---|---|
| CATEGORY | | RATE ELEMENTS | Interim | Zone | BCS | USOC | RATES ($) | | | | | Svc Order Submitted Elec per LSR | Svc Order Submitted Manually per LSR | Incremental Charge - Manual Svc Order vs. Electronic-1st | Incremental Charge - Manual Svc Order vs. Electronic-Add'l | Incremental Charge - Manual Svc Order vs. Electronic-Disc 1st | Incremental Charge - Manual Svc Order vs. Electronic-Disc Add'l |
| | | | | | | | Rec | Nonrecurring | | Nonrecurring Disconnect | | OSS Rates ($) | | | | | |
| | | | | | | | | First | Add'l | First | Add'l | SOMEC | SOMAN | SOMAN | SOMAN | SOMAN | SOMAN |
| | | Sub-Loop - Per Cross Box Location - Per 25 Pair Panel Set-Up | | | UEANL | USBSB | | 7.29 | | | | | | | | | |
| | | Sub-Loop - Per Building Equipment Room - CLEC Feeder Facility Set-Up | | | UEANL | USBSC | | 175.09 | | | | | | | | | |
| | | Sub-Loop - Per Building Equipment Room - Per 25 Pair Panel Set-Up | | | UEANL | USBSD | | 51.61 | | | | | | | | | |
| | | Unbundled Sub-Loops, Riser Cable, 2-Wire per Loop, Working and Spare Loop Activation | | | UEANL | USBRC | 3.61 | 28.46 | 3.85 | 2.20 | 0.01 | | | | | | |
| | | Unbundled Sub-Loops, Riser Cable, 4-Wire per Loop, Working and Spare Loop Activation | | | UEANL | USBRD | 7.67 | 31.07 | 4.79 | 2.27 | 0.01 | | | | | | |
| | | Sub-Loop Distribution Per 2-Wire Analog Voice Grade Loop - Zone 1 | | 1 | UEANL | USBN2 | 6.52 | 28.46 | 3.85 | 2.20 | 0.01 | | | | | | |
| | | Sub-Loop Distribution Per 2-Wire Analog Voice Grade Loop - Zone 2 | | 2 | UEANL | USBN2 | 10.18 | 28.46 | 3.85 | 2.20 | 0.01 | | | | | | |
| | | Sub-Loop Distribution Per 2-Wire Analog Voice Grade Loop - Zone 3 | | 3 | UEANL | USBN2 | 19.51 | 28.46 | 3.85 | 2.20 | 0.01 | | | | | | |
| | | Sub-Loop Distribution Per 4-Wire Analog Voice Grade Loop - Zone 1 | | 1 | UEANL | USBN4 | 5.93 | 31.07 | 4.79 | 2.27 | 0.01 | | | | | | |
| | | Sub-Loop Distribution Per 4-Wire Analog Voice Grade Loop - Zone 2 | | 2 | UEANL | USBN4 | 9.71 | 31.07 | 4.79 | 2.27 | 0.01 | | | | | | |
| | | Sub-Loop Distribution Per 4-Wire Analog Voice Grade Loop - Zone 3 | | 3 | UEANL | USBN4 | 18.85 | 31.07 | 4.79 | 2.27 | 0.01 | | | | | | |
| | | Order Coordination for Unbundled Sub-Loops, per sub-loop pair | | | UEANL | USBMC | | 18.92 | 18.92 | | | | | | | | |
| | | Sub-Loop 2-Wire Intrabuilding Network Cable (INC) | | | UEANL | USBR2 | 3.61 | 28.46 | 3.85 | 2.20 | 0.01 | | | | | | |
| | | Order Coordination for Unbundled Sub-Loops, per sub-loop pair | | | UEANL | USBMC | | 18.92 | 18.92 | | | | | | | | |
| | | Sub-Loop 4-Wire Intrabuilding Network Cable (INC) | I | | UEANL | USBR4 | 7.67 | 31.07 | 4.79 | 2.27 | 0.01 | | | | | | |
| | | Order Coordination for Unbundled Sub-Loops, per sub-loop pair | | | UEANL | USBMC | | 18.92 | 18.92 | | | | | | | | |
| | | Loop Testing - Basic 1st Half Hour | | | UEANL | URET1 | | 25.12 | 25.12 | | | | | | | | |
| | | Loop Testing - Basic Additional Half Hour | | | UEANL | URETA | | 13.62 | 13.62 | | | | | | | | |
| | | 2 Wire Copper Unbundled Sub-Loop Distribution - Zone 1 | I | 1 | UEF | UCS2X | 5.94 | 28.46 | 3.85 | 2.20 | 0.01 | | | | | | |
| | | 2 Wire Copper Unbundled Sub-Loop Distribution - Zone 2 | I | 2 | UEF | UCS2X | 7.51 | 28.46 | 3.85 | 2.20 | 0.01 | | | | | | |
| | | 2 Wire Copper Unbundled Sub-Loop Distribution - Zone 3 | I | 3 | UEF | UCS2X | 9.22 | 28.46 | 3.85 | 2.20 | 0.01 | | | | | | |
| | | Order Coordination for Unbundled Sub-Loops, per sub-loop pair | | | UEF | USBMC | | 18.92 | 18.92 | | | | | | | | |
| | | 4 Wire Copper Unbundled Sub-Loop Distribution - Zone 1 | I | 1 | UEF | UCS4X | 6.37 | 31.07 | 4.79 | 2.27 | 0.01 | | | | | | |
| | | 4 Wire Copper Unbundled Sub-Loop Distribution - Zone 2 | I | 2 | UEF | UCS4X | 6.32 | 31.07 | 4.79 | 2.27 | 0.01 | | | | | | |
| | | 4 Wire Copper Unbundled Sub-Loop Distribution - Zone 3 | I | 3 | UEF | UCS4X | 9.10 | 31.07 | 4.79 | 2.27 | 0.01 | | | | | | |
| | | Order Coordination for Unbundled Sub-Loops, per sub-loop pair | | | UEF | USBMC | | 18.92 | 18.92 | | | | | | | | |
| | | Loop Testing - Basic 1st Half Hour | | | UEF | URET1 | | 25.12 | 25.12 | | | | | | | | |
| | | Loop Testing - Basic Additional Half Hour | | | UEF | URETA | | 13.62 | 13.62 | | | | | | | | |
| | **Unbundled Network Terminating Wire (UNTW)** | | | | | | | | | | | | | | | | |
| | | Unbundled Network Terminating Wire (UNTW) per Pair | | | UENTW | UENPP | 0.533 | 25.12 | 12.28 | | | | | | | | |
| | **Network Interface Device (NID)** | | | | | | | | | | | | | | | | |
| | | Network Interface Device (NID) - 1-2 lines | I | | UENTW | UND12 | | 32.86 | 20.69 | | | | | | | | |
| | | Network Interface Device (NID) - 1-6 lines | I | | UENTW | UND16 | | 56.03 | 43.86 | | | | | | | | |
| | | Network Interface Device Cross Connect - 2 W | I | | UENTW | UNDC2 | | 2.45 | 2.45 | | | | | | | | |
| | | Network Interface Device Cross Connect - 4W | | | UENTW | UNDC4 | | 2.45 | 2.45 | | | | | | | | |
| **UNE OTHER, PROVISIONING ONLY - NO RATE** | | | | | | | | | | | | | | | | | |
| | | NID - Dispatch and Service Order for NID installation | | | UENTW | UNDBX | 0.00 | 0.00 | | | | | | | | | |
| | | UNTW Circuit Id Establishment, Provisioning Only - No Rate | | | UENTW | UENCE | 0.00 | 0.00 | | | | | | | | | |
| | | Unbundled Contract Name, Provisioning Only - No Rate | | | UEANL,UEF,UEQ,UENTW | UNECN | 0.00 | 0.00 | | | | | | | | | |
| **UNE OTHER, PROVISIONING ONLY - NO RATE** | | | | | | | | | | | | | | | | | |

| UNBUNDLED NETWORK ELEMENTS - Georgia | | | | | | | | | | | | | | Attachment: 2 | | Exhibit: A | |
|---|---|---|---|---|---|---|---|---|---|---|---|---|---|---|---|---|---|
| CATEGORY | | RATE ELEMENTS | Interim | Zone | BCS | USOC | RATES ($) | | | | | Svc Order Submitted Elec per LSR | Svc Order Submitted Manually per LSR | Incremental Charge - Manual Svc Order vs. Electronic-1st | Incremental Charge - Manual Svc Order vs. Electronic-Add'l | Incremental Charge - Manual Svc Order vs. Electronic-Disc 1st | Incremental Charge - Manual Svc Order vs. Electronic-Disc Add'l |
| | | | | | | | Rec | Nonrecurring | | Nonrecurring Disconnect | | OSS Rates ($) | | | | | |
| | | | | | | | | First | Add'l | First | Add'l | SOMEC | SOMAN | SOMAN | SOMAN | SOMAN | SOMAN |
| | | Unbundled Contact Name, Provisioning Only - no rate | | | UAL,UCL,UDC,UDL, UDN,UEA,UHL,ULC | UNECN | 0.00 | 0.00 | | | | | | | | | |
| | | Unbundled Sub-Loop Feeder-2 Wire Cross Box Jumper - no rate | | | UEA,UDN,UCL,UDC | USBFQ | 0.00 | 0.00 | | | | | | | | | |
| | | Unbundled Sub-Loop Feeder-4 Wire Cross Box Jumper - no rate | | | UEA,USL,UCL,UDL | USBFR | 0.00 | 0.00 | | | | | | | | | |
| | | Unbundled DS1 Loop - Superframe Format Option - no rate | | | USL | CCOSF | 0.00 | 0.00 | | | | | | | | | |
| | | Unbundled DS1 Loop - Expanded Superframe Format option - no rate | | | USL | CCOEF | 0.00 | 0.00 | | | | | | | | | |
| HIGH CAPACITY UNBUNDLED LOCAL LOOP | | | | | | | | | | | | | | | | | |
| | | High Capacity Unbundled Local Loop - DS3 - Per Mile per month | | | UE3 | 1L5ND | 10.97 | | | | | | | | | | |
| | | High Capacity Unbundled Local Loop - DS3 - Facility Termination per month | | | UE3 | UE3PX | 253.38 | 1,753.23 | 131.90 | 112.91 | 75.88 | | | | | | |
| | | High Capacity Unbundled Local Loop - STS-1 - Per Mile per month | | | UDLSX | 1L5ND | 10.97 | | | | | | | | | | |
| | | High Capacity Unbundled Local Loop - STS-1 - Facility Termination per month | | | UDLSX | UDLS1 | 305.42 | 1,753.23 | 131.90 | 112.91 | 75.88 | | | | | | |
| LOOP MAKE-UP | | | | | | | | | | | | | | | | | |
| | | Loop Makeup - Preordering Without Reservation, per working or spare facility queried (Manual). | | | UMK | UMKLW | | 15.19 | 15.19 | | | | | | | | |
| | | Loop Makeup - Preordering With Reservation, per spare facility queried (Manual). | | | UMK | UMKLP | | 19.85 | 19.85 | | | | | | | | |
| | | Loop Makeup--With or Without Reservation, per working or spare facility queried (Mechanized) | | | UMK | UMKMQ | | 0.82 | 0.82 | | | | | | | | |
| LINE SHARING AND LINE SPLITTING | | | | | | | | | | | | | | | | | |
| | NOTE 1: The Line Sharing monthly recurring rates for all installations completed from October 02, 2003 through midnight October 01, 2004 shall be billed as follows: | | | | | | | | | | | | | | | | |
| | NOTE 1: 10/02/2003 – 10/01/2004: 25% of the rate for an unbundled copper loop non-designed ("UCLND") | | | | | | | | | | | | | | | | |
| | NOTE 1: 10/02/2004 – 10/01/2005: 50% of the rate for UCLND | | | | | | | | | | | | | | | | |
| | NOTE 1: 10/02/2005 – 10/01/2006: 75% of the rate for UCLND | | | | | | | | | | | | | | | | |
| | NOTE 1: Above will apply to USOCS: ULSDT and ULSCT | | | | | | | | | | | | | | | | |
| | **NOTE 2: The Line Sharing monthly recurring rates with USOCs ULSDC and ULSCC applies only to circuits installed and inservice on or before October 1, 2003 | | | | | | | | | | | | | | | | |
| | LINE SHARING | | | | | | | | | | | | | | | | |
| | SPLITTERS-CENTRAL OFFICE BASED | | | | | | | | | | | | | | | | |
| | | Line Sharing Splitter, per System 96 Line Capacity | | | ULS | ULSDA | 131.00 | 0.00 | 0.00 | 0.00 | 0.00 | | | | | | |
| | | Line Sharing Splitter, per System 24 Line Capacity | | | ULS | ULSDB | 32.00 | 0.00 | 0.00 | 0.00 | 0.00 | | | | | | |
| | | Line Sharing Splitter, Per System, 8 Line Capacity | | | ULS | ULSD8 | 11.00 | 0.00 | 0.00 | 0.00 | 0.00 | | | | | | |
| | | Line Sharing-DLEC Owned Splitter in CO-CFA activaton-deactivation (per LSOD) | | | ULS | ULSDG | | 66.34 | 0.00 | 51.20 | 0.00 | | | | | | |
| | END USER ORDERING-CENTRAL OFFICE BASED LINE SHARING | | | | | | | | | | | | | | | | |
| | | Line Sharing - per Line Activation (BST Owned splitter) - OBSOLETE see **NOTE 2 | | | ULS | ULSDC | 0.61 | 10.51 | 7.70 | 7.00 | 4.20 | | | | | | |
| | | Line Share Service, TRO per line activation, BST owned splitter - Central Office Located (25% of UCLND) - please see NOTE 1 (E:10/2/2003) | | | ULS | ULSDT | 2.76 | 10.51 | 7.70 | 7.00 | 4.20 | | | | | | |
| | | Line Share Service, TRO per line activation, BST owned splitter - Central Office Located (50% of UCLND) - please see NOTE 1 (E:10/2/2004) | | | ULS | ULSDT | 5.51 | 10.51 | 7.70 | 7.00 | 4.20 | | | | | | |
| | | Line Share Service, TRO per line activation, BST owned splitter - Central Office Located (75% of UCLND) - please see NOTE 1 (E:10/2/2005) | | | ULS | ULSDT | 8.27 | 10.51 | 7.70 | 7.00 | 4.20 | | | | | | |
| | | Line Sharing - per Subsequent Activity per Line Rearrangement(BST Owned Splitter | | | ULS | ULSDS | | 36.23 | 13.23 | 16.94 | 1.69 | | | | | | |
| | | Line Sharing - per Subsequent Activity per Line Rearrangement(DLEC Owned Splitter | | | ULS | ULSCS | | 36.23 | 13.23 | 16.94 | 1.69 | | | | | | |
| | | Line Sharing - per Line Activation (DLEC owned Splitter) - OBSOLETE see **NOTE 2 | | | ULS | ULSCC | 0.61 | 17.82 | 9.36 | 8.53 | 4.30 | | | | | | |

## UNBUNDLED NETWORK ELEMENTS - Georgia

| CATEGORY | RATE ELEMENTS | Interim | Zone | BCS | USOC | RATES ($) | | | | | Svc Order Submitted Elec per LSR | Svc Order Submitted Manually per LSR | Attachment: 2 Incremental Charge - Manual Svc Order vs. Electronic-1st | Attachment: 2 Incremental Charge - Manual Svc Order vs. Electronic-Add'l | Exhibit: A Incremental Charge - Manual Svc Order vs. Electronic-Disc 1st | Exhibit: A Incremental Charge - Manual Svc Order vs. Electronic-Disc Add'l |
|---|---|---|---|---|---|---|---|---|---|---|---|---|---|---|---|---|
| | | | | | | Rec | Nonrecurring | | Nonrecurring Disconnect | | OSS Rates ($) | | | | | |
| | | | | | | | First | Add'l | First | Add'l | SOMEC | SOMAN | SOMAN | SOMAN | SOMAN | SOMAN |
| | Line Share Service, TRO per line activation, CLEC owned splitter - Central Office Located (25% of UCLND) - please see NOTE 1 (E:10/2/2003) | | | ULS | ULSCT | 2.76 | 17.82 | 9.36 | 8.53 | 4.30 | | | | | | |
| | Line Share Service, TRO per line activation, CLEC owned splitter - Central Office Located (50% of UCLND) - please see NOTE 1 (E:10/2/2004) | | | ULS | ULSCT | 5.51 | 17.82 | 9.36 | 8.53 | 4.30 | | | | | | |
| | Line Share Service, TRO per line activation, CLEC owned splitter - Central Office Located (75% of UCLND) - please see NOTE 1 (E:10/2/2005) | | | ULS | ULSCT | 8.27 | 17.82 | 9.36 | 8.53 | 4.30 | | | | | | |
| | **LINE SPLITTING** | | | | | | | | | | | | | | | |
| | **END USER ORDERING-CENTRAL OFFICE BASED** | | | | | | | | | | | | | | | |
| | Line Splitting - per line activation DLEC owned splitter | | | UEPSR UEPSB | UREOS | 0.61 | | | | | | | | | | |
| | Line Splitting - per line activation BST owned - physical | | | UEPSR UEPSB | UREBP | 0.6297 | 20.10 | 12.40 | 7.68 | 4.30 | | | | | | |
| | Line Splitting - per line activation BST owned - virtual | | | UEPSR UEPSB | UREBV | 0.6288 | 20.10 | 12.40 | 7.68 | 4.30 | | | | | | |
| | **MAINTENANCE** | | | | | | | | | | | | | | | |
| | No Trouble Found - per 1/2 hour increments - Basic | | | | | | 80.00 | 55.00 | | | | | | | | |
| | No Trouble Found - per 1/2 hour increments - Overtime | | | | | | 120.00 | 82.50 | | | | | | | | |
| | No Trouble Found - per 1/2 hour increments - Premium | | | | | | 160.00 | 110.00 | | | | | | | | |
| **UNBUNDLED DEDICATED TRANSPORT** | | | | | | | | | | | | | | | | |
| | **INTEROFFICE CHANNEL - DEDICATED TRANSPORT** | | | | | | | | | | | | | | | |
| | Interoffice Channel - Dedicated Transport - 2-Wire Voice Grade - Per Mile per month | | | U1TVX | 1L5XX | 0.0057 | | | | | | | | | | |
| | Interoffice Channel - Dedicated Transport- 2- Wire Voice Grade - Facility Termination | | | U1TVX | U1TV2 | 12.87 | 48.46 | 19.48 | 16.58 | 5.00 | | | | | | |
| | Interoffice Channel - Dedicated Transpor t- 2-Wire Voice Grade Rev Bat. - Per Mile per month | | | U1TVX | 1L5XX | 0.0057 | | | | | | | | | | |
| | Interoffice Channel - Dedicated Transport- 2- Wire VG Rev Bat. - Facility Termination | | | U1TVX | U1TR2 | 12.87 | 48.46 | 19.48 | 16.58 | 5.00 | | | | | | |
| | Interoffice Channel - Dedicated Transport - 4-Wire Voice Grade - Per Mile per month | | | U1TVX | 1L5XX | 0.0057 | | | | | | | | | | |
| | Interoffice Channel - Dedicated Transport - 4- Wire Voice Grade - Facility Termination | | | U1TVX | U1TV4 | 10.78 | 48.46 | 19.48 | 16.58 | 5.00 | | | | | | |
| | Interoffice Channel - Dedicated Transport - 56 kbps - per mile per month | | | U1TDX | 1L5XX | 0.0057 | | | | | | | | | | |
| | Interoffice Channel - Dedicated Transport - 56 kbps - Facility Termination | | | U1TDX | U1TD5 | 7.83 | 48.46 | 19.48 | 16.58 | 5.00 | | | | | | |
| | Interoffice Channel - Dedicated Transport - 64 kbps - per mile per month | | | U1TDX | 1L5XX | 0.0057 | | | | | | | | | | |
| | Interoffice Channel - Dedicated Transport - 64 kbps - Facility Termination | | | U1TDX | U1TD6 | 7.83 | 48.46 | 19.48 | 16.58 | 5.00 | | | | | | |
| | Interoffice Channel - Dedicated Channel - DS1 - Per Mile per month | | | U1TD1 | 1L5XX | 0.1154 | | | | | | | | | | |
| | Interoffice Channel - Dedicated Tranport - DS1 - Facility Termination | | | U1TD1 | U1TF1 | 34.19 | 111.03 | 80.28 | 31.36 | 21.73 | | | | | | |
| | Interoffice Channel - Dedicated Transport - DS3 - Per Mile per month | | | U1TD3 | 1L5XX | 2.53 | | | | | | | | | | |
| | Interoffice Channel - Dedicated Transport - DS3 - Facility Termination per month | | | U1TD3 | U1TF3 | 342.02 | 320.47 | 86.32 | 66.77 | 52.81 | | | | | | |
| | Interoffice Channel - Dedicated Transport - STS-1 - Per Mile per month | | | U1TS1 | 1L5XX | 2.53 | | | | | | | | | | |
| | Interoffice Channel - Dedicated Transport - STS-1 - Facility Termination | | | U1TS1 | U1TFS | 358.67 | 320.47 | 86.32 | 66.77 | 52.81 | | | | | | |
| **DARK FIBER** | | | | | | | | | | | | | | | | |
| | Dark Fiber, Four Fiber Strands, Per Route Mile or Fraction Thereof per month - Interoffice Channel | | | UDF, UDFCX | 1L5DF | 23.29 | | | | | | | | | | |
| | NRC Dark Fiber - Interoffice Channel | | | UDF, UDFCX | UDF14 | | 1,776.53 | 89.75 | 73.64 | 18.70 | | | | | | |
| | Dark Fiber, Four Fiber Strands, Per Route Mile or Fraction Thereof per month - Local Loop | | | UDF, UDFCX | 1L5DL | 46.84 | | | | | | | | | | |
| | NRC Dark Fiber - Local Loop | | | UDF, UDFCX | UDFL4 | | 1,745.99 | 87.54 | 73.64 | 18.70 | | | | | | |

| UNBUNDLED NETWORK ELEMENTS - Georgia | | | | | | | | | | | | | Attachment: 2 | | Exhibit: A | |
|---|---|---|---|---|---|---|---|---|---|---|---|---|---|---|---|---|
| CATEGORY | RATE ELEMENTS | Interim | Zone | BCS | USOC | RATES ($) | | | | | Svc Order Submitted Elec per LSR | Svc Order Submitted Manually per LSR | Incremental Charge - Manual Svc Order vs. Electronic-1st | Incremental Charge - Manual Svc Order vs. Electronic-Add'l | Incremental Charge - Manual Svc Order vs. Electronic-Disc 1st | Incremental Charge - Manual Svc Order vs. Electronic-Disc Add'l |
| | | | | | | Rec | Nonrecurring | | Nonrecurring Disconnect | | OSS Rates ($) | | | | | |
| | | | | | | | First | Add'l | First | Add'l | SOMEC | SOMAN | SOMAN | SOMAN | SOMAN | SOMAN |
| 8XX ACCESS TEN DIGIT SCREENING | | | | | | | | | | | | | | | | |
| | 8XX Access Ten Digit Screening, Per Call | | | OHD | | 0.0008543 | | | | | | | | | | |
| | 8XX Access Ten Digit Screening, Reservation Charge Per 8XX Number Reserved | | | OHD | N8R1X | | 2.50 | 0.43 | | | | | | | | |
| | 8XX Access Ten Digit Screening, Per 8XX No. Established W/O POTS Translations | | | OHD | | | 5.65 | 0.76 | 4.24 | 0.51 | | | | | | |
| | 8XX Access Ten Digit Screening, Per 8XX No. Established With POTS Translations | | | OHD | N8FTX | | 5.65 | 0.76 | 4.24 | 0.51 | | | | | | |
| | 8XX Access Ten Digit Screening, Customized Area of Service Per 8XX Number | | | OHD | N8FCX | | 2.50 | 1.25 | | | | | | | | |
| | 8XX Access Ten Digit Screening, Multiple InterLATA CXR Routing Per CXR Requested Per 8XX No. | | | OHD | N8FMX | | 2.93 | 1.68 | | | | | | | | |
| | 8XX Access Ten Digit Screening, Change Charge Per Request | | | OHD | N8FAX | | 2.93 | 0.43 | | | | | | | | |
| | 8XX Access Ten Digit Screening, Call Handling and Destination Features | | | OHD | N8FDX | | 2.50 | | | | | | | | | |
| | 8XX Access Ten Digit Screening, w/8FL No. Delivery | | | OHD | | 0.0008543 | | | | | | | | | | |
| | 8XX Access Ten Digit Screening, w/POTS No. Delivery | | | OHD | | 0.0008543 | | | | | | | | | | |
| LINE INFORMATION DATA BASE ACCESS (LIDB) | | | | | | | | | | | | | | | | |
| | LIDB Common Transport Per Query | | | OQT | | 0.0000682 | | | | | | | | | | |
| | LIDB Validation Per Query | | | OQU | | 0.0266962 | | | | | | | | | | |
| | LIDB Originating Point Code Establishment or Change | | | OQT, OQU | NRBPX | | 33.24 | 33.24 | 39.35 | 39.35 | | | | | | |
| SIGNALING (CCS7) | | | | | | | | | | | | | | | | |
| | CCS7 Signaling Connection, Per 56Kbps Facility | | | UDB | TPP++ | 8.73 | 34.77 | 34.77 | 16.91 | 16.91 | | | | | | |
| | CCS7 Signaling Termination, Per STP Port | | | UDB | PT8SX | 108.80 | | | | | | | | | | |
| | CCS7 Signaling Usage, Per Call Setup Message | | | UDB | | 0.0000132 | | | | | | | | | | |
| | CCS7 Signaling Usage, Per TCAP Message | | | UDB | | 0.0000527 | | | | | | | | | | |
| | CCS7 Signaling Connection, Per link (A link) (same as E.3.1) | | | UDB | TPP++ | 8.73 | 34.77 | 34.77 | 16.91 | 16.91 | | | | | | |
| | CCS7 Signaling Connection, Per link (B link) (also known as D link) (same as E.3.1) | | | UDB | TPP++ | 8.73 | 34.77 | 34.77 | 16.91 | 16.91 | | | | | | |
| | CCS7 Signaling Usage, Per ISUP Message (same as E.3.3) | | | UDB | | 0.0000132 | | | | | | | | | | |
| | CCS7 Signaling Usage Surrogate, per link | | | UDB | STU56 | 907.44 | | | | | | | | | | |
| | CCS7 Signaling Point Code, Establishment or Change, per STP affected | | | UDB | CCAPO | | 28.15 | 28.15 | 33.32 | 33.32 | | | | | | |
| E911 SERVICE | | | | | | | | | | | | | | | | |
| | Local Channel - Dedicated - 2-wr Voice Grade | | | | | 7.74 | 121.07 | 53.30 | 46.40 | 13.37 | | | | | | |
| | Interoffice Transport - Dedicated - 2-wr Voice Grade Per Mile | | | | | 0.0057 | | | | | | | | | | |
| | Interoffice Transport - Dedicated - 2-wr Voice Grade Per Facility Termination | | | | | 12.87 | 48.46 | 19.48 | 16.58 | 5.00 | | | | | | |
| | Local Channel - Dedicated - DS1 - Zone 1 | | | | | 18.47 | 149.46 | 111.20 | 40.36 | 26.12 | | | | | | |
| | Local Channel - Dedicated - DS1 - Zone 2 | | | | | 56.30 | 149.46 | 111.20 | 40.36 | 26.12 | | | | | | |
| | Local Channel - Dedicated - DS1 - Zone 3 | | | | | 164.70 | 149.46 | 111.20 | 40.36 | 26.12 | | | | | | |
| | Interoffice Transport - Dedicated - DS1 Per Mile | | | | | 0.1154 | | | | | | | | | | |
| | Interoffice Transport - Dedicated - DS1 Per Facility Termination | | | | | 34.19 | 111.03 | 80.28 | 31.36 | 21.73 | | | | | | |
| CALLING NAME (CNAM) SERVICE | | | | | | | | | | | | | | | | |
| | CNAM For DB Owners - Service Establishment | | | OQV | | | 22.90 | | 20.32 | | | | | | | |
| | CNAM For Non DB Owners - Service Establishment | | | OQV | | | 22.90 | | 20.32 | | | | | | | |
| | CNAM For DB Owners - Service Provisioning With Point Code Establishment | | | OQV | | | 959.77 | 709.83 | 251.47 | 184.91 | | | | | | |
| | CNAM For Non DB Owners - Service Provisioning With Point Code Establishment | | | OQV | | | 331.89 | 237.45 | 257.65 | 184.91 | | | | | | |
| | CNAM for DB Owners, Per Query | | | OQV | | 0.0009924 | | | | | | | | | | |
| | CNAM for Non DB Owners, Per Query | | | OQV | | 0.0009924 | | | | | | | | | | |
| | CNAM (Non-Databs Owner), NRC, applies when using the Character Based User Interface (CHUI) | | | OQV | CDDCH | | 595.00 | 595.00 | | | | | | | | |
| SELECTIVE ROUTING | | | | | | | | | | | | | | | | |
| | Selective Routing Per Unique Line Class Code Per Request Per Switch | | | | | | 102.19 | 61.15 | 12.68 | 6.34 | | | | | | |
| VIRTUAL COLLOCATION | | | | | | | | | | | | | | | | |

## UNBUNDLED NETWORK ELEMENTS - Georgia

| CATEGORY | RATE ELEMENTS | Interim | Zone | BCS | USOC | RATES ($) | | | | | Svc Order Submitted Elec per LSR | Svc Order Submitted Manually per LSR | Attachment: 2 | | Exhibit: A | |
|---|---|---|---|---|---|---|---|---|---|---|---|---|---|---|---|---|
| | | | | | | | | | | | | | Incremental Charge - Manual Svc Order vs. Electronic-1st | Incremental Charge - Manual Svc Order vs. Electronic-Add'l | Incremental Charge - Manual Svc Order vs. Electronic-Disc 1st | Incremental Charge - Manual Svc Order vs. Electronic-Disc Add'l |
| | | | | | | Rec | Nonrecurring | | Nonrecurring Disconnect | | OSS Rates ($) | | | | | |
| | | | | | | | First | Add'l | First | Add'l | SOMEC | SOMAN | SOMAN | SOMAN | SOMAN | SOMAN |
| | Virtual Collocation-2 Wire Cross Connects (Loop) for Line Splitting | | | UEPSR UEPSB | VE1LS | 0.0188 | 0.00 | 0.00 | 0.00 | 0.00 | | | | | | |
| PHYSICAL COLLOCATION | | | | | | | | | | | | | | | | |
| | Physical Collocation-2 Wire Cross Connects (Loop) for Line Splitting | | | UEPSR UEPSB | PE1LS | 0.0197 | 0.00 | 0.00 | | | | | | | | |
| AIN SELECTIVE CARRIER ROUTING | | | | | | | | | | | | | | | | |
| | Regional Service Establishment | | | SRC | SRCEC | | 101,311.67 | 101,311.67 | 7,833.25 | 7,833.25 | | | | | | |
| | End Office Establishment | | | SRC | SRCEO | | 158.92 | 158.92 | 1.64 | 1.64 | | | | | | |
| | Line/Port NRC, per end user | | | SRC | SRCLP | | 2.06 | 2.06 | | | | | | | | |
| | Query NRC, per query | | | SRC | | 0.0020368 | | | | | | | | | | |
| AIN - BELLSOUTH AIN SMS ACCESS SERVICE | | | | | | | | | | | | | | | | |
| | AIN SMS Access Service - Service Establishment, Per State, Initial Setup | | | A1N | CAMSE | | 41.41 | 41.41 | 41.63 | 41.63 | | | | | | |
| | AIN SMS Access Service - Port Connection - Dial/Shared Access | | | A1N | CAMDP | | 8.15 | 8.15 | 9.16 | 9.16 | | | | | | |
| | AIN SMS Access Service - Port Connection - ISDN Access | | | A1N | CAM1P | | 8.15 | 8.15 | 9.16 | 9.16 | | | | | | |
| | AIN SMS Access Service - User Identification Codes - Per User ID Code | | | A1N | CAMAU | | 35.29 | 35.29 | 26.50 | 26.50 | | | | | | |
| | AIN SMS Access Service - Security Card, Per User ID Code, Initial or Replacement | | | A1N | CAMRC | | 40.24 | 40.24 | 11.72 | 11.72 | | | | | | |
| | AIN SMS Access Service - Storage, Per Unit (100 Kilobytes) | | | | | 0.0038 | | | | | | | | | | |
| | AIN SMS Access Service - Session, Per Minute | | | | | 1.81 | | | | | | | | | | |
| | AIN SMS Access Service - Company Performed Session, Per Minute | | | | | 0.8323 | | | | | | | | | | |
| AIN - BELLSOUTH AIN TOOLKIT SERVICE | | | | | | | | | | | | | | | | |
| | AIN Toolkit Service - Service Establishment Charge, Per State, Initial Setup | | | CAM | BAPSC | | 41.41 | 41.41 | 41.63 | 41.63 | | | | | | |
| | AIN Toolkit Service - Training Session, Per Customer | | | | BAPVX | | 4,236.62 | 4,236.62 | | | | | | | | |
| | AIN Toolkit Service - Trigger Access Charge, Per Trigger, Per DN, Term. Attempt | | | | BAPTT | | 8.15 | 8.15 | 9.16 | 9.16 | | | | | | |
| | AIN Toolkit Service - Trigger Access Charge, Per Trigger, Per DN, Off-Hook Delay | | | | BAPTD | | 8.15 | 8.15 | 9.16 | 9.16 | | | | | | |
| | AIN Toolkit Service - Trigger Access Charge, Per Trigger, Per DN, Off-Hook Immediate | | | | BAPTM | | 8.15 | 8.15 | 9.16 | 9.16 | | | | | | |
| | AIN Toolkit Service - Trigger Access Charge, Per Trigger, Per DN, 10-Digit PODP | | | | BAPTO | | 33.98 | 33.98 | 14.09 | 14.09 | | | | | | |
| | AIN Toolkit Service - Trigger Access Charge, Per Trigger, Per DN, CDP | | | | BAPTC | | 33.98 | 33.98 | 14.09 | 14.09 | | | | | | |
| | AIN Toolkit Service - Trigger Access Charge, Per Trigger, Per DN, Feature Code | | | | BAPTF | | 33.98 | 33.98 | 14.09 | 14.09 | | | | | | |
| | AIN Toolkit Service - Query Charge, Per Query | | | | | 0.0271438 | | | | | | | | | | |
| | AIN Toolkit Service - Type 1 Node Charge, Per AIN Toolkit Subscription, Per Node, Per Query | | | | | 0.0059195 | | | | | | | | | | |
| | AIN Toolkit Service - SCP Storage Charge, Per SMS Access Account, Per 100 Kilobytes | | | | | 0.04 | | | | | | | | | | |
| | AIN Toolkit Service - Monthly report - Per AIN Toolkit Service Subscription | | | CAM | BAPMS | 14.78 | 8.15 | 8.15 | 5.71 | 5.71 | | | | | | |
| | AIN Toolkit Service - Special Study - Per AIN Toolkit Service Subscription | | | CAM | BAPLS | 6.46 | 8.98 | 8.98 | | | | | | | | |
| | AIN Toolkit Service - Call Event Report - Per AIN Toolkit Service Subscription | | | CAM | BAPDS | 8.54 | 8.15 | 8.15 | 5.71 | 5.71 | | | | | | |
| | AIN Toolkit Service - Call Event Special Study - Per AIN Toolkit Service Subscription | | | CAM | BAPES | 0.22 | 8.98 | 8.98 | | | | | | | | |
| ENHANCED EXTENDED LINK (EELs) | | | | | | | | | | | | | | | | |
| | NOTE: The monthly recurring and non-recurring charges below will apply and the Switch-As-Is Charge will not apply for UNE combinations provisioned as ' Ordinarily Combined' Network Elements. | | | | | | | | | | | | | | | |
| | NOTE: The monthly recurring and the Switch-As-Is Charge and not the non-recurring charges below will apply for UNE combinations provisioned as ' Currently Combined' Network Elements. | | | | | | | | | | | | | | | |
| | EXTENTED 2-WIRE VOICE GRADE EXTENDED LOOP WITH DEDICATED DS1 INTEROFFICE TRANSPORT | | | | | | | | | | | | | | | |
| | First 2-Wire VG Loop (SL2) In Combination - Zone 1 | | 1 | UNCVX | UEAL2 | 11.57 | 195.94 | 36.38 | 18.42 | 6.86 | | | | | | |
| | First 2-Wire VG Loop (SL2) In Combination - Zone 2 | | 2 | UNCVX | UEAL2 | 16.95 | 195.94 | 36.38 | 18.42 | 6.86 | | | | | | |

| UNBUNDLED NETWORK ELEMENTS - Georgia | | | | | | | | | | | | | | Attachment: 2 | | Exhibit: A | |
|---|---|---|---|---|---|---|---|---|---|---|---|---|---|---|---|---|---|
| CATEGORY | | RATE ELEMENTS | Interim | Zone | BCS | USOC | RATES ($) | | | | | Svc Order Submitted Elec per LSR | Svc Order Submitted Manually per LSR | Incremental Charge - Manual Svc Order vs. Electronic-1st | Incremental Charge - Manual Svc Order vs. Electronic-Add'l | Incremental Charge - Manual Svc Order vs. Electronic-Disc 1st | Incremental Charge - Manual Svc Order vs. Electronic-Disc Add'l |
| | | | | | | | Rec | Nonrecurring | | Nonrecurring Disconnect | | OSS Rates ($) | | | | | |
| | | | | | | | | First | Add'l | First | Add'l | SOMEC | SOMAN | SOMAN | SOMAN | SOMAN | SOMAN |
| | | First 2-Wire VG Loop (SL2) in Combination - Zone 3 | | 3 | UNCVX | UEAL2 | 33.08 | 195.94 | 36.38 | 18.42 | 6.86 | | | | | | |
| | | Interoffice Transport - Dedicated - DS1 combination - Per Mile per month | | | UNC1X | 1L5XX | 0.1154 | | | | | | | | | | |
| | | Interoffice Transport - Dedicated - DS1 combination - Facility Termination per month | | | UNC1X | U1TF1 | 34.19 | 87.76 | 45.73 | 43.80 | 27.97 | | | | | | |
| | | 1/0 Channelization System in combination Per Month | | | UNC1X | MQ1 | 69.75 | 86.10 | | | | | | | | | |
| | | Voice Grade COCI - Per Month | | | UNCVX | 1D1VG | 0.4689 | 27.33 | 2.90 | 16.86 | 1.04 | | | | | | |
| | | Each Additional 2-Wire VG Loop (SL 2) in Combination - Zone 1 | | 1 | UNCVX | UEAL2 | 11.57 | 195.94 | 36.38 | 18.42 | 6.86 | | | | | | |
| | | Each Additional 2-Wire VG Loop (SL 2) in Combination - Zone 2 | | 2 | UNCVX | UEAL2 | 16.95 | 195.94 | 36.38 | 18.42 | 6.86 | | | | | | |
| | | Each Additional 2-Wire VG Loop (SL 2) in Combination - Zone 3 | | 3 | UNCVX | UEAL2 | 33.08 | 195.94 | 36.38 | 18.42 | 6.86 | | | | | | |
| | | Voice Grade COCI - Per Month | | | UNCVX | 1D1VG | 0.4689 | 27.33 | 2.90 | 16.86 | 1.04 | | | | | | |
| | | Nonrecurring Currently Combined Network Elements Switch -As-Is Charge | | | UNC1X | UNCCC | | 5.70 | 5.70 | 6.61 | 6.61 | | | | | | |
| | | **EXTENDED 4-WIRE VOICE GRADE EXTENDED LOOP WITH DEDICATED DS1 INTEROFFICE TRANSPORT** | | | | | | | | | | | | | | | |
| | | First 4-Wire Analog Voice Grade Loop in Combination - Zone 1 | | 1 | UNCVX | UEAL4 | 17.80 | 195.94 | 36.38 | 18.42 | 6.86 | | | | | | |
| | | First 4-Wire Analog Voice Grade Loop in Combination - Zone 2 | | 2 | UNCVX | UEAL4 | 21.68 | 195.94 | 36.38 | 18.42 | 6.86 | | | | | | |
| | | First 4-Wire Analog Voice Grade Loop in Combination - Zone 3 | | 3 | UNCVX | UEAL4 | 30.25 | 195.94 | 36.38 | 18.42 | 6.86 | | | | | | |
| | | Interoffice Transport - Dedicated - DS1 combination - Per Mile Per Month | | | UNC1X | 1L5XX | 0.1154 | | | | | | | | | | |
| | | Interoffice Transport - Dedicated - DS1 - Facility Termination Per Month | | | UNC1X | U1TF1 | 34.19 | 87.76 | 45.73 | 43.80 | 27.97 | | | | | | |
| | | 1/0 Channel System in combination Per Month | | | UNC1X | MQ1 | 69.75 | 86.10 | | | | | | | | | |
| | | Voice Grade COCI in combination - per month | | | UNCVX | 1D1VG | 0.4689 | 27.33 | 2.90 | 16.86 | 1.04 | | | | | | |
| | | Additional 4-Wire Analog Voice Grade Loop in same DS1 Interoffice Transport Combination - Zone 1 | | 1 | UNCVX | UEAL4 | 17.80 | 195.94 | 36.38 | 18.42 | 6.86 | | | | | | |
| | | Additional 4-Wire Analog Voice Grade Loop in same DS1 Interoffice Transport Combination - Zone 2 | | 2 | UNCVX | UEAL4 | 21.68 | 195.94 | 36.38 | 18.42 | 6.86 | | | | | | |
| | | Additional 4-Wire Analog Voice Grade Loop in same DS1 Interoffice Transport Combination - Zone 3 | | 3 | UNCVX | UEAL4 | 30.25 | 195.94 | 36.38 | 18.42 | 6.86 | | | | | | |
| | | Additional Voice Grade COCI in combination - per month | | | UNCVX | 1D1VG | 0.4689 | 27.33 | 2.90 | 16.86 | 1.04 | | | | | | |
| | | Nonrecurring Currently Combined Network Elements Switch -As-Is Charge | | | UNC1X | UNCCC | | 5.70 | 5.70 | 6.61 | 6.61 | | | | | | |
| | | **EXTENDED 4-WIRE 56 KBPS EXTENDED DIGITAL LOOP WITH DEDICATED DS1 INTEROFFICE TRANSPORT** | | | | | | | | | | | | | | | |
| | | First 4-Wire 56Kbps Digital Grade Loop in Combination - Zone 1 | | 1 | UNCDX | UDL56 | 21.86 | 195.94 | 36.38 | 18.42 | 6.86 | | | | | | |
| | | First 4-Wire 56Kbps Digital Grade Loop in Combination - Zone 2 | | 2 | UNCDX | UDL56 | 28.36 | 195.94 | 36.38 | 18.42 | 6.86 | | | | | | |
| | | First 4-Wire 56Kbps Digital Grade Loop in Combination - Zone 3 | | 3 | UNCDX | UDL56 | 38.22 | 195.94 | 36.38 | 18.42 | 6.86 | | | | | | |
| | | Interoffice Transport - Dedicated - DS1 combination - Per Mile Per Month | | | UNC1X | 1L5XX | 0.1154 | | | | | | | | | | |
| | | Interoffice Transport - Dedicated - DS1 - combination Facility Termination Per Month | | | UNC1X | U1TF1 | 34.19 | 87.76 | 45.73 | 43.80 | 27.97 | | | | | | |
| | | 1/0 Channel System in combination Per Month | | | UNC1X | MQ1 | 69.75 | 86.10 | | | | | | | | | |
| | | OCU-DP COCI (data) per month (2.4-64kbs) | | | UNCDX | 1D1DD | 0.9963 | 27.33 | 2.90 | 16.86 | 1.04 | | | | | | |
| | | Additional 4-Wire 56Kbps Digital Grade Loop in same DS1 Interoffice Transport Combination - Zone 1 | | 1 | UNCDX | UDL56 | 21.86 | 195.94 | 36.38 | 18.42 | 6.86 | | | | | | |
| | | Additional 4-Wire 56Kbps Digital Grade Loop in same DS1 Interoffice Transport Combination - Zone 2 | | 2 | UNCDX | UDL56 | 28.36 | 195.94 | 36.38 | 18.42 | 6.86 | | | | | | |
| | | Additional 4-Wire 56Kbps Digital Grade Loop in same DS1 Interoffice Transport Combination - Zone 3 | | 3 | UNCDX | UDL56 | 38.22 | 195.94 | 36.38 | 18.42 | 6.86 | | | | | | |
| | | Additional OCU-DP COCI (data) - in combination per month (2.4-64kbs) | | | UNCDX | 1D1DD | 0.9963 | 27.33 | 2.90 | 16.86 | 1.04 | | | | | | |

| UNBUNDLED NETWORK ELEMENTS - Georgia | | | | | | | | | | | | | | Attachment: 2 | | Exhibit: A | |
|---|---|---|---|---|---|---|---|---|---|---|---|---|---|---|---|---|---|
| CATEGORY | | RATE ELEMENTS | Interim | Zone | BCS | USOC | RATES ($) | | | | | Svc Order Submitted Elec per LSR | Svc Order Submitted Manually per LSR | Incremental Charge - Manual Svc Order vs. Electronic-1st | Incremental Charge - Manual Svc Order vs. Electronic-Add'l | Incremental Charge - Manual Svc Order vs. Electronic-Disc 1st | Incremental Charge - Manual Svc Order vs. Electronic-Disc Add'l |
| | | | | | | | Rec | Nonrecurring | | Nonrecurring Disconnect | | OSS Rates ($) | | | | | |
| | | | | | | | | First | Add'l | First | Add'l | SOMEC | SOMAN | SOMAN | SOMAN | SOMAN | SOMAN |
| | | Nonrecurring Currently Combined Network Elements Switch -As-Is Charge | | | UNC1X | UNCCC | | 5.70 | 5.70 | 6.61 | 6.61 | | | | | | |
| | | EXTENDED 4-WIRE 64 KBPS EXTENDED DIGITAL LOOP WITH DEDICATED DS1 INTEROFFICE TRANSPORT | | | | | | | | | | | | | | | |
| | | First 4-Wire 64Kbps Digital Grade Loop in Combination - Zone 1 | | 1 | UNCDX | UDL64 | 21.86 | 195.94 | 36.38 | 18.42 | 6.86 | | | | | | |
| | | First 4-Wire 64Kbps Digital Grade Loop in Combination - Zone 2 | | 2 | UNCDX | UDL64 | 28.36 | 195.94 | 36.38 | 18.42 | 6.86 | | | | | | |
| | | First 4-Wire 64Kbps Digital Grade Loop in Combination - Zone 3 | | 3 | UNCDX | UDL64 | 38.22 | 195.94 | 36.38 | 18.42 | 6.86 | | | | | | |
| | | Interoffice Transport - Dedicated - DS1 combination - Per Mile Per Month | | | UNC1X | 1L5XX | 0.1154 | | | | | | | | | | |
| | | Interoffice Transport - Dedicated - DS1 combination - Facility Termination Per Month | | | UNC1X | U1TF1 | 34.19 | 87.76 | 45.73 | 43.80 | 27.97 | | | | | | |
| | | 1/0 Channel System in combination Per Month | | | UNC1X | MQ1 | 69.75 | 86.10 | | | | | | | | | |
| | | OCU-DP COCI (data) - in combination - per month (2.4-64kbs) | | | UNCDX | 1D1DD | 0.9963 | 27.33 | 2.90 | 16.86 | 1.04 | | | | | | |
| | | Additional 4-Wire 64Kbps Digital Grade Loop in same DS1 Interoffice Transport Combination - Zone 1 | | 1 | UNCDX | UDL64 | 21.86 | 195.94 | 36.38 | 18.42 | 6.86 | | | | | | |
| | | Additional 4-Wire 64Kbps Digital Grade Loop in same DS1 Interoffice Transport Combination - Zone 2 | | 2 | UNCDX | UDL64 | 28.36 | 195.94 | 36.38 | 18.42 | 6.86 | | | | | | |
| | | Additional 4-Wire 64Kbps Digital Grade Loop in same DS1 Interoffice Transport Combination - Zone 3 | | 3 | UNCDX | UDL64 | 38.22 | 195.94 | 36.38 | 18.42 | 6.86 | | | | | | |
| | | Additional OCU-DP COCI (data) - in combination - per month (2.4-64kbs) | | | UNCDX | 1D1DD | 0.9963 | 27.33 | 2.90 | 16.86 | 1.04 | | | | | | |
| | | Nonrecurring Currently Combined Network Elements Switch -As-Is Charge | | | UNC1X | UNCCC | | 5.70 | 5.70 | 6.61 | 6.61 | | | | | | |
| | | EXTENDED 4-WIRE DS1 DIGITAL EXTENDED LOOP WITH DEDICATED DS1 INTEROFFICE TRANSPORT | | | | | | | | | | | | | | | |
| | | 4-Wire DS1 Digital Loop in Combination - Zone 1 | | 1 | UNC1X | USLXX | 41.02 | 209.45 | 70.44 | 37.91 | 6.86 | | | | | | |
| | | 4-Wire DS1 Digital Loop in Combination - Zone 2 | | 2 | UNC1X | USLXX | 46.41 | 209.45 | 70.44 | 37.91 | 6.86 | | | | | | |
| | | 4-Wire DS1 Digital Loop in Combination - Zone 3 | | 3 | UNC1X | USLXX | 62.03 | 209.45 | 70.44 | 37.91 | 6.86 | | | | | | |
| | | Interoffice Transport - Dedicated - DS1 combination - Per Mile Per Month | | | UNC1X | 1L5XX | 0.1154 | | | | | | | | | | |
| | | Interoffice Transport - Dedicated - DS1 combination - Facility Termination Per Month | | | UNC1X | U1TF1 | 34.19 | 87.76 | 45.73 | 43.80 | 27.97 | | | | | | |
| | | Nonrecurring Currently Combined Network Elements Switch -As-Is Charge | | | UNC1X | UNCCC | | 5.70 | 5.70 | 6.61 | 6.61 | | | | | | |
| | | EXTENDED 4-WIRE DS1 DIGITAL EXTENDED LOOP WITH DEDICATED DS3 INTEROFFICE TRANSPORT | | | | | | | | | | | | | | | |
| | | First DS1Loop in Combination - Zone 1 | | 1 | UNC1X | USLXX | 41.02 | 209.45 | 70.44 | 37.91 | 6.86 | | | | | | |
| | | First DS1Loop in Combination - Zone 2 | | 2 | UNC1X | USLXX | 46.41 | 209.45 | 70.44 | 37.91 | 6.86 | | | | | | |
| | | First DS1Loop in Combination - Zone 3 | | 3 | UNC1X | USLXX | 62.03 | 209.45 | 70.44 | 37.91 | 6.86 | | | | | | |
| | | Interoffice Transport - Dedicated - DS3 combination - Per Mile Per Month | | | UNC3X | 1L5XX | 2.53 | | | | | | | | | | |
| | | Interoffice Transport - Dedicated - DS3 - Facility Termination per month | | | UNC3X | U1TF3 | 342.02 | 325.91 | 77.07 | 49.56 | 32.88 | | | | | | |
| | | 3/1Channel System in combination per month | | | UNC3X | MQ3 | 121.90 | | | | | | | | | | |
| | | DS1 COCI in combination per month | | | UNC1X | UC1D1 | 7.35 | 27.33 | 2.90 | 16.86 | 1.04 | | | | | | |
| | | Additional DS1Loop in DS3 Interoffice Transport Combination - Zone 1 | | 1 | UNC1X | USLXX | 41.02 | 209.45 | 70.44 | 37.91 | 6.86 | | | | | | |
| | | Additional DS1Loop in DS3 Interoffice Transport Combination - Zone 2 | | 2 | UNC1X | USLXX | 46.41 | 209.45 | 70.44 | 37.91 | 6.86 | | | | | | |
| | | Additional DS1Loop in DS3 Interoffice Transport Combination - Zone 3 | | 3 | UNC1X | USLXX | 62.03 | 209.45 | 70.44 | 37.91 | 6.86 | | | | | | |
| | | Additoinal DS1 COCI in combination per month | | | UNC1X | UC1D1 | 7.35 | 27.33 | 2.90 | 16.86 | 1.04 | | | | | | |
| | | Nonrecurring Currently Combined Network Elements Switch -As-Is Charge | | | UNC3X | UNCCC | | 5.70 | 5.70 | 6.61 | 6.61 | | | | | | |
| | | EXTENDED 2-WIRE VOICE GRADE EXTENDED LOOP/ 2 WIRE VOICE GRADE INTEROFFICE TRANSPORT | | | | | | | | | | | | | | | |
| | | 2-WireVG Loop in combination - Zone 1 | | 1 | UNCVX | UEAL2 | 11.57 | 195.94 | 36.38 | 18.42 | 6.86 | | | | | | |
| | | 2-WireVG Loop in combination - Zone 2 | | 2 | UNCVX | UEAL2 | 16.95 | 195.94 | 36.38 | 18.42 | 6.86 | | | | | | |
| | | 2-WireVG Loop in combination - Zone 3 | | 3 | UNCVX | UEAL2 | 33.08 | 195.94 | 36.38 | 18.42 | 6.86 | | | | | | |

## UNBUNDLED NETWORK ELEMENTS - Georgia

| CATEGORY | | RATE ELEMENTS | Interim | Zone | BCS | USOC | RATES ($) | | | | | Svc Order Submitted Elec per LSR | Svc Order Submitted Manually per LSR | Attachment: 2 | | Exhibit: A | |
|---|---|---|---|---|---|---|---|---|---|---|---|---|---|---|---|---|---|
| | | | | | | | | | | | | | | Incremental Charge - Manual Svc Order vs. Electronic-1st | Incremental Charge - Manual Svc Order vs. Electronic-Add'l | Incremental Charge - Manual Svc Order vs. Electronic-Disc 1st | Incremental Charge - Manual Svc Order vs. Electronic-Disc Add'l |
| | | | | | | | Rec | Nonrecurring | | Nonrecurring Disconnect | | OSS Rates ($) | | | | | |
| | | | | | | | | First | Add'l | First | Add'l | SOMEC | SOMAN | SOMAN | SOMAN | SOMAN | SOMAN |
| | | Interoffice Transport - 2-wire VG - Dedicated- Per Mile Per Month | | | UNCVX | 1L5XX | 0.0057 | | | | | | | | | | |
| | | Interoffice Transport - 2-wire VG - Dedicated - Facility Termination per month | | | UNCVX | U1TV2 | 12.87 | 66.53 | 33.61 | 43.42 | 27.60 | | | | | | |
| | | Nonrecurring Currently Combined Network Elements Switch -As-Is Charge | | | UNCVX | UNCCC | | 5.70 | 5.70 | 6.61 | 6.61 | | | | | | |
| | | **EXTENDED 4-WIRE VOICE GRADE EXTENDED LOOP/ 4 WIRE VOICE GRADE INTEROFFICE TRANSPORT** | | | | | | | | | | | | | | | |
| | | 4-WireVG Loop in combination - Zone 1 | | 1 | UNCVX | UEAL4 | 17.80 | 195.94 | 36.38 | 18.42 | 6.86 | | | | | | |
| | | 4-WireVG Loop in combination - Zone 2 | | 2 | UNCVX | UEAL4 | 21.68 | 195.94 | 36.38 | 18.42 | 6.86 | | | | | | |
| | | 4-WireVG Loop in combination - Zone 3 | | 3 | UNCVX | UEAL4 | 30.25 | 195.94 | 36.38 | 18.42 | 6.86 | | | | | | |
| | | Interoffice Transport - 4-wire VG - Dedicated - Per Mile Per Month | | | UNCVX | 1L5XX | 0.0057 | | | | | | | | | | |
| | | Interoffice Transport - 4-wire VG - Dedicated - Facility Termination per month | | | UNCVX | U1TV4 | 10.78 | 66.53 | 33.61 | 43.42 | 27.60 | | | | | | |
| | | Nonrecurring Currently Combined Network Elements Switch -As-Is Charge | | | UNCVX | UNCCC | | 5.70 | 5.70 | 6.61 | 6.61 | | | | | | |
| | | **EXTENDED DS3 DIGITAL EXTENDED LOOP WITH DEDICATED DS3 INTEROFFICE TRANSPORT** | | | | | | | | | | | | | | | |
| | | DS3 Local Loop in combination - per mile per month | | | UNC3X | 1L5ND | 10.97 | | | | | | | | | | |
| | | DS3 Local Loop in combination - Facility Termination per month | | | UNC3X | UE3PX | 253.38 | 1,260.47 | 628.84 | 41.53 | 20.76 | | | | | | |
| | | Interoffice Transport - Dedicated - DS3 - Per Mile per month | | | UNC3X | 1L5XX | 2.53 | | | | | | | | | | |
| | | Interoffice Transport - Dedicated - DS3 combination - Facility Termination per month | | | UNC3X | U1TF3 | 342.02 | 325.91 | 77.07 | 49.56 | 32.88 | | | | | | |
| | | Nonrecurring Currently Combined Network Elements Switch -As-Is Charge | | | UNC3X | UNCCC | | 5.70 | 5.70 | 6.61 | 6.61 | | | | | | |
| | | **EXTENDED STS-1 DIGITAL EXTENDED LOOP WITH DEDICATED STS-1 INTEROFFICE TRANSPORT** | | | | | | | | | | | | | | | |
| | | STS-1 Local Loip in combination - per mile per month | | | UNCSX | 1L5ND | 10.97 | | | | | | | | | | |
| | | STS-1 Local Loop in combination - Facility Termination per month | | | UNCSX | UDLS1 | 305.42 | 1,260.47 | 628.84 | 41.53 | 20.76 | | | | | | |
| | | Interoffice Transport - Dedicated - STS-1 combination - per mile per month | | | UNCSX | 1L5XX | 2.53 | | | | | | | | | | |
| | | Interoffice Transport - Dedicated - STS-1 combination - Facility Termination per month | | | UNCSX | U1TFS | 358.67 | 325.91 | 77.07 | 49.56 | 32.88 | | | | | | |
| | | Nonrecurring Currently Combined Network Elements Switch -As-Is Charge | | | UNCSX | UNCCC | | 5.70 | 5.70 | 6.61 | 6.61 | | | | | | |
| | | **EXTENDED 2-WIRE ISDN EXTENDED LOOP WITH DS1 INTEROFFICE TRANSPORT** | | | | | | | | | | | | | | | |
| | | First 2-Wire ISDN Loop in Combination - Zone 1 | | 1 | UNCNX | U1L2X | 19.82 | 195.94 | 36.38 | 18.42 | 6.86 | | | | | | |
| | | First 2-Wire ISDN Loop in Combination - Zone 2 | | 2 | UNCNX | U1L2X | 26.26 | 195.94 | 36.38 | 18.42 | 6.86 | | | | | | |
| | | First 2-Wire ISDN Loop in Combination - Zone 3 | | 3 | UNCNX | U1L2X | 42.17 | 195.94 | 36.38 | 18.42 | 6.86 | | | | | | |
| | | Interoffice Transport - Dedicated - DS1 combination - per mile per month | | | UNC1X | 1L5XX | 0.1154 | | | | | | | | | | |
| | | Interoffice Transport - Dedicated - DS1 combination - Facility Termination per month | | | UNC1X | U1TF1 | 34.19 | 87.76 | 45.73 | 43.80 | 27.97 | | | | | | |
| | | 1/0 Channel System in combination - per month | | | UNC1X | MQ1 | 69.75 | 86.10 | | | | | | | | | |
| | | 2-wire ISDN COCI (BRITE) - in combination - per month | | | UNCNX | UC1CA | 1.66 | 27.33 | 2.90 | 16.86 | 1.04 | | | | | | |
| | | Additional 2-wire ISDN Loop in same DS1Interoffice Transport Combination - Zone 1 | | 1 | UNCNX | U1L2X | 19.82 | 195.94 | 36.38 | 18.42 | 6.86 | | | | | | |
| | | Additional 2-wire ISDN Loop in same DS1Interoffice Transport Combination - Zone 2 | | 2 | UNCNX | U1L2X | 26.26 | 195.94 | 36.38 | 18.42 | 6.86 | | | | | | |
| | | Additional 2-wire ISDN Loop in same DS1Interoffice Transport Combination - Zone 3 | | 3 | UNCNX | U1L2X | 42.17 | 195.94 | 36.38 | 18.42 | 6.86 | | | | | | |
| | | Additional 2-wire ISDN COCI (BRITE) - in combination- per month | | | UNCNX | UC1CA | 1.66 | 27.33 | 2.90 | 16.86 | 1.04 | | | | | | |
| | | Nonrecurring Currently Combined Network Elements Switch -As-Is Charge | | | UNC1X | UNCCC | | 5.70 | 5.70 | 6.61 | 6.61 | | | | | | |
| | | **EXTENDED 4-WIRE DS1 DIGITAL EXTENDED LOOP WITH DEDICATED STS-1 INTEROFFICE TRANSPORT** | | | | | | | | | | | | | | | |
| | | First DS1 Loop Combination - Zone 1 | | 1 | UNC1X | USLXX | 41.02 | 209.45 | 70.44 | 37.91 | 6.86 | | | | | | |
| | | First DS1 Loop Combination - Zone 2 | | 2 | UNC1X | USLXX | 46.41 | 209.45 | 70.44 | 37.91 | 6.86 | | | | | | |
| | | First DS1 Loop Combination - Zone 3 | | 3 | UNC1X | USLXX | 62.03 | 209.45 | 70.44 | 37.91 | 6.86 | | | | | | |

## UNBUNDLED NETWORK ELEMENTS - Georgia

| CATEGORY | | RATE ELEMENTS | Interim | Zone | BCS | USOC | RATES ($) | | | | | Svc Order Submitted Elec per LSR | Svc Order Submitted Manually per LSR | Attachment: 2 | | Exhibit: A | |
|---|---|---|---|---|---|---|---|---|---|---|---|---|---|---|---|---|---|
| | | | | | | | | | | | | | | Incremental Charge - Manual Svc Order vs. Electronic-1st | Incremental Charge - Manual Svc Order vs. Electronic-Add'l | Incremental Charge - Manual Svc Order vs. Electronic-Disc 1st | Incremental Charge - Manual Svc Order vs. Electronic-Disc Add'l |
| | | | | | | | Rec | Nonrecurring | | Nonrecurring Disconnect | | OSS Rates ($) | | | | | |
| | | | | | | | | First | Add'l | First | Add'l | SOMEC | SOMAN | SOMAN | SOMAN | SOMAN | SOMAN |
| | | Interoffice Transport - Dedicated - STS-1 combination - Per Mile Per Month | | | UNCSX | 1L5XX | 2.53 | | | | | | | | | | |
| | | Interoffice Transport - Dedicated - STS-1 combination - Facility Termination per month | | | UNCSX | U1TFS | 358.67 | 325.91 | 77.07 | 49.56 | 32.88 | | | | | | |
| | | 3/1 Channel System in combination per month | | | UNCSX | MQ3 | 121.90 | | | | | | | | | | |
| | | DS1 COCI in combination per month | | | UNC1X | UC1D1 | 7.35 | 27.33 | 2.90 | 16.86 | 1.04 | | | | | | |
| | | Additional DS1Loop in the same STS-1 Interoffice Transport Combination - Zone 1 | | 1 | UNC1X | USLXX | 41.02 | 209.45 | 70.44 | 37.91 | 6.86 | | | | | | |
| | | Additional DS1Loop in the same STS-1 Interoffice Transport Combination - Zone 2 | | 2 | UNC1X | USLXX | 46.41 | 209.45 | 70.44 | 37.91 | 6.86 | | | | | | |
| | | Additional DS1Loop in the same STS-1 Interoffice Transport Combination - Zone 3 | | 3 | UNC1X | USLXX | 62.03 | 209.45 | 70.44 | 37.91 | 6.86 | | | | | | |
| | | DS1 COCI in combination per month | | | UNC1X | UC1D1 | 7.35 | 27.33 | 2.90 | 16.86 | 1.04 | | | | | | |
| | | Nonrecurring Currently Combined Network Elements Switch -As-Is Charge | | | UNCSX | UNCCC | | 5.70 | 5.70 | 6.61 | 6.61 | | | | | | |
| | | **EXTENDED 4-WIRE 56 KBPS DIGITAL EXTENDED LOOP WITH 56 KBPS INTEROFFICE TRANSPORT** | | | | | | | | | | | | | | | |
| | | 4-wire 56 kbps Local Loop in combination - Zone 1 | | 1 | UNCDX | UDL56 | 21.86 | 195.94 | 36.38 | 18.42 | 6.86 | | | | | | |
| | | 4-wire 56 kbps Local Loop in combination - Zone 2 | | 2 | UNCDX | UDL56 | 28.36 | 195.94 | 36.38 | 18.42 | 6.86 | | | | | | |
| | | 4-wire 56 kbps Local Loop in combination - Zone 3 | | 3 | UNCDX | UDL56 | 38.22 | 195.94 | 36.38 | 18.42 | 6.86 | | | | | | |
| | | Interoffice Transport - Dedicated - 4-wire 56 kbps combination - Per Mile per month | | | UNCDX | 1L5XX | 0.0057 | | | | | | | | | | |
| | | Interoffice Transport - Dedicated - 4-wire 56 kbps combination - Facility Termination per month | | | UNCDX | U1TD5 | 7.83 | 66.53 | 33.61 | 43.42 | 27.60 | | | | | | |
| | | Nonrecurring Currently Combined Network Elements Switch -As-Is Charge | | | UNCDX | UNCCC | | 5.70 | 5.70 | 6.61 | 6.61 | | | | | | |
| | | **EXTENDED 4-WIRE 64 KBPS DIGITAL EXTENDED LOOP WITH 64 KBPS INTEROFFICE TRANSPORT** | | | | | | | | | | | | | | | |
| | | 4-wire 64 kbps Lcoal Loop in Combination - Zone 1 | | 1 | UNCDX | UDL64 | 21.86 | 195.94 | 36.38 | 18.42 | 6.86 | | | | | | |
| | | 4-wire 64 kbps Lcoal Loop in Combination - Zone 2 | | 2 | UNCDX | UDL64 | 28.36 | 195.94 | 36.38 | 18.42 | 6.86 | | | | | | |
| | | 4-wire 64 kbps Lcoal Loop in Combination - Zone 3 | | 3 | UNCDX | UDL64 | 38.22 | 195.94 | 36.38 | 18.42 | 6.86 | | | | | | |
| | | Interoffice Transport - Dedicated - 4-wire 64 kbps combination - Per Mile per month | | | UNCDX | 1L5XX | 0.0057 | | | | | | | | | | |
| | | Interoffice Transport - Dedicated - 4-wire 64 kbps combination - Facility Termination per month | | | UNCDX | U1TD6 | 7.83 | 66.53 | 33.61 | 43.42 | 27.60 | | | | | | |
| | | Nonrecurring Currently Combined Network Elements Switch -As-Is Charge | | | UNCDX | UNCCC | | 5.70 | 5.70 | 6.61 | 6.61 | | | | | | |
| | | **EXTENDED 2-WIRE VOICE GRADE LOOP WITH DS1 INTEROFFICE TRANSPORT w/ 3/1 MUX** | | | | | | | | | | | | | | | |
| | | First 2-wire VG Loop (SL2) in Combination - Zone 1 | | 1 | UNCVX | UEAL2 | 11.57 | 195.94 | 36.38 | 18.42 | 6.86 | | | | | | |
| | | First 2-wire VG Loop (SL2) in Combination - Zone 2 | | 2 | UNCVX | UEAL2 | 16.95 | 195.94 | 36.38 | 18.42 | 6.86 | | | | | | |
| | | First 2-wire VG Loop (SL2) in Combination - Zone 3 | | 3 | UNCVX | UEAL2 | 33.08 | 195.94 | 36.38 | 18.42 | 6.86 | | | | | | |
| | | First Interoffice Transport - Dedicated - DS1 combination - Per Mile | | | UNC1X | 1L5XX | 0.1154 | | | | | | | | | | |
| | | First Interoffice Transport - Dedicated - DS1 combination - Facility Termination per month | | | UNC1X | U1TF1 | 34.19 | 87.76 | 45.73 | 43.80 | 27.97 | | | | | | |
| | | Per each DS1 Channelization System Per Month | | | UNC1X | MQ1 | 69.75 | 86.10 | | | | | | | | | |
| | | Per each Voice Grade COCI - Per Month per month | | | UNCVX | 1D1VG | 0.4689 | 27.33 | 2.90 | 16.86 | 1.04 | | | | | | |
| | | 3/1 Channel System in combination per month | | | UNC3X | MQ3 | 121.90 | | | | | | | | | | |
| | | Per each DS1 COCI in combination per month | | | UNC1X | UC1D1 | 7.35 | 27.33 | 2.90 | 16.86 | 1.04 | | | | | | |
| | | Each Additional 2-Wire VG Loop(SL 2) in the same DS1 Interoffice Transport Combination - Zone 1 | | 1 | UNCVX | UEAL2 | 11.57 | 195.94 | 36.38 | 18.42 | 6.86 | | | | | | |
| | | Each Additional 2-Wire VG Loop(SL2) in the same DS1 Interoffice Transport Combination - Zone 2 | | 2 | UNCVX | UEAL2 | 16.95 | 195.94 | 36.38 | 18.42 | 6.86 | | | | | | |
| | | Each Additional 2-Wire VG Loop(SL2) in the same DS1 Interoffice Transport Combination - Zone 3 | | 3 | UNCVX | UEAL2 | 33.08 | 195.94 | 36.38 | 18.42 | 6.86 | | | | | | |
| | | Each Additional Voice Grade COCI in combination - per month | | | UNCVX | 1D1VG | 0.4689 | 27.33 | 2.90 | 16.86 | 1.04 | | | | | | |
| | | Each Additional DS1 Interoffice Channel per mile in same 3/1 Channel System per month | | | UNC1X | 1L5XX | 0.1154 | | | | | | | | | | |
| | | Each Additional DS1 Interoffice Channel Facility Termination in same 3/1 Channel System per month | | | UNC1X | U1TF1 | 34.19 | 87.76 | 45.73 | 43.80 | 27.97 | | | | | | |
| | | Each Additional DS1 COCI combination per month | | | UNC1X | UC1D1 | 7.35 | 27.33 | 2.90 | 16.86 | 1.04 | | | | | | |

## UNBUNDLED NETWORK ELEMENTS - Georgia

| CATEGORY | | RATE ELEMENTS | Interim | Zone | BCS | USOC | RATES ($) | | | | | Svc Order Submitted Elec per LSR | Svc Order Submitted Manually per LSR | Attachment: 2 Incremental Charge - Manual Svc Order vs. Electronic-1st | Attachment: 2 Incremental Charge - Manual Svc Order vs. Electronic-Add'l | Exhibit: A Incremental Charge - Manual Svc Order vs. Electronic-Disc 1st | Exhibit: A Incremental Charge - Manual Svc Order vs. Electronic-Disc Add'l |
|---|---|---|---|---|---|---|---|---|---|---|---|---|---|---|---|---|---|
| | | | | | | | Rec | Nonrecurring | | Nonrecurring Disconnect | | OSS Rates ($) | | | | | |
| | | | | | | | | First | Add'l | First | Add'l | SOMEC | SOMAN | SOMAN | SOMAN | SOMAN | SOMAN |
| | | Nonrecurring Currently Combined Network Elements Switch -As-Is Charge | | | UNC1X | UNCCC | | 5.70 | 5.70 | 6.61 | 6.61 | | | | | | |
| | | **EXTENDED 4-WIRE VOICE GRADE LOOP WITH DEDICATED DS1 INTEROFFICE TRANSPORT w/ 3/1 MUX** | | | | | | | | | | | | | | | |
| | | First 4-Wire Analog Voice Grade Local Loop in Combination - Zone 1 | | 1 | UNCVX | UEAL4 | 17.80 | 195.94 | 36.38 | 18.42 | 6.86 | | | | | | |
| | | First 4-Wire Analog Voice Grade Local Loop in Combination - Zone 2 | | 2 | UNCVX | UEAL4 | 21.68 | 195.94 | 36.38 | 18.42 | 6.86 | | | | | | |
| | | First 4-Wire Analog Voice Grade Local Loop in Combination - Zone 3 | | 3 | UNCVX | UEAL4 | 30.25 | 195.94 | 36.38 | 18.42 | 6.86 | | | | | | |
| | | First Interoffice Transport - Dedicated - DS1 combination - Per Mile Per Month | | | UNC1X | 1L5XX | 0.1154 | | | | | | | | | | |
| | | First Interoffice Transport - Dedicated - DS1 - Facility Termination Per Month | | | UNC1X | U1TF1 | 34.19 | 87.76 | 45.73 | 43.80 | 27.97 | | | | | | |
| | | Per each 1/0 Channel System in combination Per Month | | | UNC1X | MQ1 | 69.75 | 86.10 | | | | | | | | | |
| | | Per each Voice Grade COCI in combination - per month | | | UNCVX | 1D1VG | 0.4689 | 27.33 | 2.90 | 16.86 | 1.04 | | | | | | |
| | | 3/1 Channel System in combination per month | | | UNC3X | MQ3 | 121.90 | | | | | | | | | | |
| | | Per each DS1 COCI in combination per month | | | UNC1X | UC1D1 | 7.35 | 27.33 | 2.90 | 16.86 | 1.04 | | | | | | |
| | | Additional 4-Wire Analog Voice Grade Loop in same DS1 Interoffice Transport Combination - Zone 1 | | 1 | UNCVX | UEAL4 | 17.80 | 195.94 | 36.38 | 18.42 | 6.86 | | | | | | |
| | | Additional 4-Wire Analog Voice Grade Loop in same DS1 Interoffice Transport Combination - Zone 2 | | 2 | UNCVX | UEAL4 | 21.68 | 195.94 | 36.38 | 18.42 | 6.86 | | | | | | |
| | | Additional 4-Wire Analog Voice Grade Loop in same DS1 Interoffice Transport Combination - Zone 3 | | 3 | UNCVX | UEAL4 | 30.25 | 195.94 | 36.38 | 18.42 | 6.86 | | | | | | |
| | | Each Additional DS1 Interoffice Channel per mile in same 3/1 Channel System per month | | | UNC1X | 1L5XX | 0.1154 | | | | | | | | | | |
| | | Each Additional DS1 Interoffice Channel Facility Termination in same 3/1 Channel System per month | | | UNC1X | U1TF1 | 34.19 | 87.76 | 45.73 | 43.80 | 27.97 | | | | | | |
| | | Additional Voice Grade COCI - in combination - per month | | | UNCVX | 1D1VG | 0.4689 | 27.33 | 2.90 | 16.86 | 1.04 | | | | | | |
| | | Nonrecurring Currently Combined Network Elements Switch -As-Is Charge | | | UNC1X | UNCCC | | 5.70 | 5.70 | 6.61 | 6.61 | | | | | | |
| | | **EXTENDED 4-WIRE 56 KBPS DIGITAL EXTENDED LOOP WITH 56 KBPS INTEROFFICE TRANSPORT w/ 3/1 MUX** | | | | | | | | | | | | | | | |
| | | First 4-Wire 56Kbps Digital Grade Local Loop in Combination - Zone 1 | | 1 | UNCDX | UDL56 | 21.86 | 195.94 | 36.38 | 18.42 | 6.86 | | | | | | |
| | | First 4-Wire 56Kbps Digital Grade Local Loop in Combination - Zone 2 | | 2 | UNCDX | UDL56 | 28.36 | 195.94 | 36.38 | 18.42 | 6.86 | | | | | | |
| | | First 4-Wire 56Kbps Digital Grade Local Loop in Combination - Zone 3 | | 3 | UNCDX | UDL56 | 38.22 | 195.94 | 36.38 | 18.42 | 6.86 | | | | | | |
| | | First Interoffice Transport - Dedicated - DS1 combination - Per Mile Per Month | | | UNC1X | 1L5XX | 0.1154 | | | | | | | | | | |
| | | First Interoffice Transport - Dedicated - DS1 - combination Facility Termination Per Month | | | UNC1X | U1TF1 | 34.19 | 87.76 | 45.73 | 43.80 | 27.97 | | | | | | |
| | | Per each 1/0 Channel System in combination Per Month | | | UNC1X | MQ1 | 69.75 | 86.10 | | | | | | | | | |
| | | Per each OCU-DP COCI (data) COCI per month (2.4-64kbs) | | | UNCDX | 1D1DD | 0.9963 | 27.33 | 2.90 | 16.86 | 1.04 | | | | | | |
| | | 3/1 Channel System in combination per month | | | UNC3X | MQ3 | 121.90 | | | | | | | | | | |
| | | Per each DS1 COCI in combination per month | | | UNC1X | UC1D1 | 7.35 | 27.33 | 2.90 | 16.86 | 1.04 | | | | | | |
| | | Additional 4-Wire 56Kbps Digital Grade Loop in same DS1 Interoffice Transport Combination - Zone 1 | | 1 | UNCDX | UDL56 | 21.86 | 195.94 | 36.38 | 18.42 | 6.86 | | | | | | |
| | | Additional 4-Wire 56Kbps Digital Grade Loop in same DS1 Interoffice Transport Combination - Zone 2 | | 2 | UNCDX | UDL56 | 28.36 | 195.94 | 36.38 | 18.42 | 6.86 | | | | | | |
| | | Additional 4-Wire 56Kbps Digital Grade Loop in same DS1 Interoffice Transport Combination - Zone 3 | | 3 | UNCDX | UDL56 | 38.22 | 195.94 | 36.38 | 18.42 | 6.86 | | | | | | |
| | | OCU-DP COCI (data) COCI in combination per month (2.4-64kbs) | | | UNCDX | 1D1DD | 0.9963 | 27.33 | 2.90 | 16.86 | 1.04 | | | | | | |
| | | Each Additional DS1 Interoffice Channel per mile in same 3/1 Channel System per month | | | UNC1X | 1L5XX | 0.1154 | | | | | | | | | | |
| | | Each Additional DS1 Interoffice Channel Facility Termination in same 3/1 Channel System per month | | | UNC1X | U1TF1 | 34.19 | 87.76 | 45.73 | 43.80 | 27.97 | | | | | | |
| | | Each Additional DS1 COCI in the same 3/1 channel system combination per month | | | UNC1X | UC1D1 | 7.35 | 27.33 | 2.90 | 16.86 | 1.04 | | | | | | |

## UNBUNDLED NETWORK ELEMENTS - Georgia

| CATEGORY | | RATE ELEMENTS | Interim | Zone | BCS | USOC | RATES ($) | | | | | Svc Order Submitted Elec per LSR | Svc Order Submitted Manually per LSR | Attachment: 2 | | Exhibit: A | |
|---|---|---|---|---|---|---|---|---|---|---|---|---|---|---|---|---|---|
| | | | | | | | | | | | | | | Incremental Charge - Manual Svc Order vs. Electronic-1st | Incremental Charge - Manual Svc Order vs. Electronic-Add'l | Incremental Charge - Manual Svc Order vs. Electronic-Disc 1st | Incremental Charge - Manual Svc Order vs. Electronic-Disc Add'l |
| | | | | | | | Rec | Nonrecurring | | Nonrecurring Disconnect | | OSS Rates ($) | | | | | |
| | | | | | | | | First | Add'l | First | Add'l | SOMEC | SOMAN | SOMAN | SOMAN | SOMAN | SOMAN |
| | | Nonrecurring Currently Combined Network Elements Switch -As-Is Charge | | | UNC1X | UNCCC | | 5.70 | 5.70 | 6.61 | 6.61 | | | | | | |
| | | **EXTENDED 4-WIRE 64 KBPS DIGITAL LOOP WITH DEDICATED DS1 INTEROFFICE TRANSPORT w/ 3/1 MUX** | | | | | | | | | | | | | | | |
| | | First 4-Wire 64Kbps Digital Grade Loop in a DS1 Interoffice Transport Combination - Zone 1 | | 1 | UNCDX | UDL64 | 21.86 | 195.94 | 36.38 | 18.42 | 6.86 | | | | | | |
| | | First 4-Wire 64Kbps Digital Grade Loop in a DS1 Interoffice Transport Combination - Zone 2 | | 2 | UNCDX | UDL64 | 28.36 | 195.94 | 36.38 | 18.42 | 6.86 | | | | | | |
| | | First 4-Wire 64Kbps Digital Grade Loop in a DS1 Interoffice Transport Combination - Zone 3 | | 3 | UNCDX | UDL64 | 38.22 | 195.94 | 36.38 | 18.42 | 6.86 | | | | | | |
| | | First Interoffice Transport - Dedicated - DS1 combination - Per Mile Per Month | | | UNC1X | 1L5XX | 0.1154 | | | | | | | | | | |
| | | First Interoffice Transport - Dedicated - DS1 combination - Facility Termination Per Month | | | UNC1X | U1TF1 | 34.19 | 87.76 | 45.73 | 43.80 | 27.97 | | | | | | |
| | | Per each Channel System 1/0 in combination Per Month | | | UNC1X | MQ1 | 69.75 | 86.10 | | | | | | | | | |
| | | Per each OCU-DP COCI (data) in combination - per month (2.4-64kbs) | | | UNCDX | 1D1DD | 0.9963 | 27.33 | 2.90 | 16.86 | 1.04 | | | | | | |
| | | 3/1 Channel System in combination per month | | | UNC3X | MQ3 | 121.90 | | | | | | | | | | |
| | | Per each DS1 COCI in combination per month | | | UNC1X | UC1D1 | 7.35 | 27.33 | 2.90 | 16.86 | 1.04 | | | | | | |
| | | Additional 4-Wire 64Kbps Digital Grade Loop in same DS1 Interoffice Transport Combination - Zone 1 | | 1 | UNCDX | UDL64 | 21.86 | 195.94 | 36.38 | 18.42 | 6.86 | | | | | | |
| | | Additional 4-Wire 64Kbps Digital Grade Loop in same DS1 Interoffice Transport Combination - Zone 2 | | 2 | UNCDX | UDL64 | 28.36 | 195.94 | 36.38 | 18.42 | 6.86 | | | | | | |
| | | Additional 4-Wire 64Kbps Digital Grade Loop in same DS1 Interoffice Transport Combination - Zone 3 | | 3 | UNCDX | UDL64 | 38.22 | 195.94 | 36.38 | 18.42 | 6.86 | | | | | | |
| | | Additional OCU-DP COCI (data) - DS1 to DS0 Channel System combination - per month (2.4-64kbs) | | | UNCDX | 1D1DD | 0.9963 | 27.33 | 2.90 | 16.86 | 1.04 | | | | | | |
| | | Each Additional DS1 Interoffice Channel per mile in same 3/1 Channel System per month | | | UNC1X | 1L5XX | 0.1154 | | | | | | | | | | |
| | | Each Additional DS1 Interoffice Channel Facility Termination in same 3/1 Channel System per month | | | UNC1X | U1TF1 | 34.19 | 87.76 | 45.73 | 43.80 | 27.97 | | | | | | |
| | | Each Additional DS1 COCI in the same 3/1 channel system combination per month | | | UNC1X | UC1D1 | 7.35 | 27.33 | 2.90 | 16.86 | 1.04 | | | | | | |
| | | Nonrecurring Currently Combined Network Elements Switch -As-Is Charge | | | UNC1X | UNCCC | | 5.70 | 5.70 | 6.61 | 6.61 | | | | | | |
| | | **EXTENDED 2-WIRE ISDN LOOP WITH DS1 INTEROFFICE TRANSPORT w/ 3/1 MUX** | | | | | | | | | | | | | | | |
| | | First 2-Wire ISDN Loop in a DS1 Interoffice Combination Transport - Zone 1 | | 1 | UNCNX | U1L2X | 19.82 | 195.94 | 36.38 | 18.42 | 6.86 | | | | | | |
| | | First 2-Wire ISDN Loop in a DS1 Interoffice Combination Transport - Zone 2 | | 2 | UNCNX | U1L2X | 26.26 | 195.94 | 36.38 | 18.42 | 6.86 | | | | | | |
| | | First 2-Wire ISDN Loop in a DS1 Interoffice Combination Transport - Zone 3 | | 3 | UNCNX | U1L2X | 42.17 | 195.94 | 36.38 | 18.42 | 6.86 | | | | | | |
| | | First Interoffice Transport - Dedicated - DS1 combination - Per Mile per month | | | UNC1X | 1L5XX | 0.1154 | | | | | | | | | | |
| | | First Interoffice Transport - Dedicated - DS1 combination - Facility Termination per month | | | UNC1X | U1TF1 | 34.19 | 87.76 | 45.73 | 43.80 | 27.97 | | | | | | |
| | | Per each Channel System 1/0 in combination - per month | | | UNC1X | MQ1 | 69.75 | 86.10 | | | | | | | | | |
| | | Per each 2-wire ISDN COCI (BRITE) in combination - per month | | | UNCNX | UC1CA | 1.66 | 27.33 | 2.90 | 16.86 | 1.04 | | | | | | |
| | | 3/1 Channel System in combination per month | | | UNC3X | MQ3 | 121.90 | | | | | | | | | | |
| | | Per each DS1 COCI in combination per month | | | UNC1X | UC1D1 | 7.35 | 27.33 | 2.90 | 16.86 | 1.04 | | | | | | |
| | | Additional 2-wire ISDN Loop in same DS1Interoffice Transport Combination - Zone 1 | | 1 | UNCNX | U1L2X | 19.82 | 195.94 | 36.38 | 18.42 | 6.86 | | | | | | |
| | | Additional 2-wire ISDN Loop in same DS1Interoffice Transport Combination - Zone 2 | | 2 | UNCNX | U1L2X | 26.26 | 195.94 | 36.38 | 18.42 | 6.86 | | | | | | |
| | | Additional 2-wire ISDN Loop in same DS1Interoffice Transport Combination - Zone 3 | | 3 | UNCNX | U1L2X | 42.17 | 195.94 | 36.38 | 18.42 | 6.86 | | | | | | |
| | | Additional 2-wire ISDN COCI (BRITE) in same 1/0 channel system combination- per month | | | UNCNX | UC1CA | 1.66 | 27.33 | 2.90 | 16.86 | 1.04 | | | | | | |

| UNBUNDLED NETWORK ELEMENTS - Georgia | | | | | | | | | | | | | | Attachment: 2 | | Exhibit: A | |
|---|---|---|---|---|---|---|---|---|---|---|---|---|---|---|---|---|---|
| CATEGORY | | RATE ELEMENTS | Interim | Zone | BCS | USOC | RATES ($) | | | | | Svc Order Submitted Elec per LSR | Svc Order Submitted Manually per LSR | Incremental Charge - Manual Svc Order vs. Electronic-1st | Incremental Charge - Manual Svc Order vs. Electronic-Add'l | Incremental Charge - Manual Svc Order vs. Electronic-Disc 1st | Incremental Charge - Manual Svc Order vs. Electronic-Disc Add'l |
| | | | | | | | Rec | Nonrecurring | | Nonrecurring Disconnect | | OSS Rates ($) | | | | | |
| | | | | | | | | First | Add'l | First | Add'l | SOMEC | SOMAN | SOMAN | SOMAN | SOMAN | SOMAN |
| | | Each Additional DS1 Interoffice Channel per mile in same 3/1 Channel System per month | | | UNC1X | 1L5XX | 0.1154 | | | | | | | | | | |
| | | Each Additional DS1 Interoffice Channel Facility Termination in same 3/1 Channel System per month | | | UNC1X | U1TF1 | 34.19 | 87.76 | 45.73 | 43.80 | 27.97 | | | | | | |
| | | Each Additional DS1 COCI in the same 3/1 channel system combination per month | | | UNC1X | UC1D1 | 7.35 | 27.33 | 2.90 | 16.86 | 1.04 | | | | | | |
| | | Nonrecurring Currently Combined Network Elements Switch -As-Is Charge | | | UNC1X | UNCCC | | 5.70 | 5.70 | 6.61 | 6.61 | | | | | | |
| | EXTENDED 4-WIRE DS1 LOOP WITH DEDICATED DS1 INTEROFFICE TRANSPORT w/ 3/1 MUX | | | | | | | | | | | | | | | | |
| | | First 4-wire DS1 Digital Lcoal Loop in Combination - Zone 1 | | 1 | UNC1X | USLXX | 41.02 | 209.45 | 70.44 | 37.91 | 6.86 | | | | | | |
| | | First 4-wire DS1 Digital Lcoal Loop in Combination - Zone 2 | | 2 | UNC1X | USLXX | 46.41 | 209.45 | 70.44 | 37.91 | 6.86 | | | | | | |
| | | First 4-wire DS1 Digital Lcoal Loop in Combination - Zone 3 | | 3 | UNC1X | USLXX | 62.03 | 209.45 | 70.44 | 37.91 | 6.86 | | | | | | |
| | | First Interoffice Transport - Dedicated - DS1 combination - Per Mile Per Month | | | UNC1X | 1L5XX | 0.1154 | | | | | | | | | | |
| | | First Interoffice Transport - Dedicated - DS1 combination - Facility Termination Per Month | | | UNC1X | U1TF1 | 34.19 | 87.76 | 45.73 | 43.80 | 27.97 | | | | | | |
| | | 3/1 Channel System in combination per month | | | UNC3X | MQ3 | 121.90 | | | | | | | | | | |
| | | Per each DS1 COCI combination per month | | | UNC1X | UC1D1 | 7.35 | 27.33 | 2.90 | 16.86 | 1.04 | | | | | | |
| | | Each Additional DS1 Interoffice Channel per mile in same 3/1 Channel System per month | | | UNC1X | 1L5XX | 0.1154 | | | | | | | | | | |
| | | Each Additional DS1 Interoffice Channel Facility Termination in same 3/1 Channel System per month | | | UNC1X | U1TF1 | 34.19 | 87.76 | 45.73 | 43.80 | 27.97 | | | | | | |
| | | Each Additional DS1 COCI in the same 3/1 channel system combination per month | | | UNC1X | UC1D1 | 7.35 | 27.33 | 2.90 | 16.86 | 1.04 | | | | | | |
| | | Additional 4-Wire DS1 Digital Local Loop in Combination - Zone 1 | | 1 | UNC1X | USLXX | 41.02 | 209.45 | 70.44 | 37.91 | 6.86 | | | | | | |
| | | Additional 4-Wire DS1 Digital Local Loop in Combination - Zone 2 | | 2 | UNC1X | USLXX | 46.41 | 209.45 | 70.44 | 37.91 | 6.86 | | | | | | |
| | | Additional 4-Wire DS1 Digital Local Loop in Combination - Zone 3 | | 3 | UNC1X | USLXX | 62.03 | 209.45 | 70.44 | 37.91 | 6.86 | | | | | | |
| | | Nonrecurring Currently Combined Network Elements Switch -As-Is Charge | | | UNC1X | UNCCC | | 5.70 | 5.70 | 6.61 | 6.61 | | | | | | |
| | EXTENDED 4-WIRE 56 KBPS DIGITAL EXTENDED LOOP WITH DS0 INTEROFFICE TRANSPORT | | | | | | | | | | | | | | | | |
| | | First 4-wire 56 kbps Local Loop in combination - Zone 1 | | 1 | UNCDX | UDL56 | 21.86 | 195.94 | 36.38 | 18.42 | 6.86 | | | | | | |
| | | First 4-wire 56 kbps Local Loop in combination - Zone 2 | | 2 | UNCDX | UDL56 | 28.36 | 195.94 | 36.38 | 18.42 | 6.86 | | | | | | |
| | | First 4-wire 56 kbps Local Loop in combination - Zone 3 | | 3 | UNCDX | UDL56 | 38.22 | 195.94 | 36.38 | 18.42 | 6.86 | | | | | | |
| | | First 4-wiree 56 kbps Interoffice Transport - Dedicated - Per Mile per month | | | UNCDX | 1L5XX | 0.0057 | | | | | | | | | | |
| | | First 4-wire 56 kbps Interoffice Transport - Dedicated - Facility Termination per month | | | UNCDX | U1TD5 | 7.83 | 66.53 | 33.61 | 43.42 | 27.60 | | | | | | |
| | | Nonrecurring Currently Combined Network Elements Switch -As-Is Charge | | | UNCDX | UNCCC | | 5.70 | 5.70 | 6.61 | 6.61 | | | | | | |
| | EXTENDED 4-WIRE 64 KBPS DIGITAL EXTENDED LOOP WITH DS0 INTEROFFICE TRANSPORT | | | | | | | | | | | | | | | | |
| | | First 4-wire 64 kbps Local Loop in combination - Zone 1 | | 1 | UNCDX | UDL64 | 21.86 | 195.94 | 36.38 | 18.42 | 6.86 | | | | | | |
| | | First 4-wire 64 kbps Local Loop in combination - Zone 2 | | 2 | UNCDX | UDL64 | 28.36 | 195.94 | 36.38 | 18.42 | 6.86 | | | | | | |
| | | First 4-wire 64 kbps Local Loop in combination - Zone 3 | | 3 | UNCDX | UDL64 | 38.22 | 195.94 | 36.38 | 18.42 | 6.86 | | | | | | |
| | | First I4-wire 65 kbps Interoffice Transport - Dedicated - Per Mile per month | | | UNCDX | 1L5XX | 0.0057 | | | | | | | | | | |
| | | First 4-wire 64 kbps Interoffice Transport - Dedicated - Facility Termination per month | | | UNCDX | U1TD6 | 7.83 | 66.53 | 33.61 | 43.42 | 27.60 | | | | | | |
| | | Nonrecurring Currently Combined Network Elements Switch -As-Is Charge | | | UNCDX | UNCCC | | 5.70 | 5.70 | 6.61 | 6.61 | | | | | | |
| ADDITIONAL NETWORK ELEMENTS | | | | | | | | | | | | | | | | | |
| | When used as a part of a currently combined facility, the non-recurrng charges do not apply, but a Switch As Is charge does apply. | | | | | | | | | | | | | | | | |
| | When used as ordinarily combined network elements in All States, the non-recurring charges apply and the Switch As Is Charge does not. | | | | | | | | | | | | | | | | |
| | Nonrecurring Currently Combined Network Elements "Switch As Is" Charge (One applies to each combination) | | | | | | | | | | | | | | | | |
| | | Nonrecurring Currently Combined Network Elements Switch -As-Is Charge - 2 wire/4-Wire VG | | | UNCVX | UNCCC | | 5.70 | 5.70 | 6.61 | 6.61 | | | | | | |

## UNBUNDLED NETWORK ELEMENTS - Georgia

| CATEGORY | RATE ELEMENTS | Interim | Zone | BCS | USOC | RATES ($) | | | | | Svc Order Submitted Elec per LSR | Svc Order Submitted Manually per LSR | Attachment: 2 | | Exhibit: A | |
|---|---|---|---|---|---|---|---|---|---|---|---|---|---|---|---|---|
| | | | | | | | | | | | | | Incremental Charge - Manual Svc Order vs. Electronic-1st | Incremental Charge - Manual Svc Order vs. Electronic-Add'l | Incremental Charge - Manual Svc Order vs. Electronic-Disc 1st | Incremental Charge - Manual Svc Order vs. Electronic-Disc Add'l |
| | | | | | | Rec | Nonrecurring | | Nonrecurring Disconnect | | OSS Rates ($) | | | | | |
| | | | | | | | First | Add'l | First | Add'l | SOMEC | SOMAN | SOMAN | SOMAN | SOMAN | SOMAN |
| | Nonrecurring Currently Combined Network Elements Switch -As-Is Charge - 56/64 kbps | | | UNCDX | UNCCC | | 5.70 | 5.70 | 6.61 | 6.61 | | | | | | |
| | Nonrecurring Currently Combined Network Elements Switch -As-Is Charge - DS1 | | | UNC1X | UNCCC | | 5.70 | 5.70 | 6.61 | 6.61 | | | | | | |
| | Nonrecurring Currently Combined Network Elements Switch -As-Is Charge - DS3 | | | UNC3X | UNCCC | | 5.70 | 5.70 | 6.61 | 6.61 | | | | | | |
| | Nonrecurring Currently Combined Network Elements Switch -As-Is Charge - STS1 | | | UNCSX | UNCCC | | 5.70 | 5.70 | 6.61 | 6.61 | | | | | | |
| | **Optional Features & Functions:** | | | | | | | | | | | | | | | |
| | Clear Channel Capability Extended Frame Option - per DS1 | I | | U1TD1, ULDD1,UNC1X | CCOEF | | 0I | 0I | 0I | 0I | | | | | | |
| | Clear Channel Capability Super FrameOption - per DS1 | I | | U1TD1, ULDD1,UNC1X | CCOSF | | 0I | 0I | 0I | 0I | | | | | | |
| | Clear Channel Capability (SF/ESF) Option - Subsequent Activity - per DS1 | I | | ULDD1, U1TD1, UNC1X, USL | NRCCC | | 184.62S | 23.78S | 2.03S | 0.79S | | | | | | |
| | C-bit Parity Option - Subsequent Activity - per DS3 | I | | U1TD3, ULDD3, UE3, UNC3X | NRCC3 | | 218.74S | 7.66S | 0.7591S | 0S | | | | | | |
| | **MULTIPLEXERS** | | | | | | | | | | | | | | | |
| | DS1 to DS0 Channel System per month | | | UNC1X | MQ1 | 69.75 | 86.10 | | | | | | | | | |
| | OCU-DP COCI (data) - DS1 to DS0 Channel System - per month (2.4-64kbs) used for a Local Loop | | | UDL | 1D1DD | 0.9963 | 11.98 | 11.39 | 6.61 | 6.61 | | | | | | |
| | OCU-DP COCI (data) - DS1 to DS0 Channel System - per month (2.4-64kbs) used for connection to a channelized DS1 Local Channel in the same SWC as collocation | | | U1TUD | 1D1DD | 0.9963 | 11.98 | 11.39 | 6.61 | 6.61 | | | | | | |
| | 2-wire ISDN COCI (BRITE) - DS1 to DS0 Channel Systsem - per month for a Local Loop | | | UDN | UC1CA | 1.66 | 15.81 | 11.39 | 6.61 | 6.61 | | | | | | |
| | 2-wire ISDN COCI (BRITE) - DS1 to DS0 Channel Systsem - per month used for connection to a channelized DS1 Local Channel in the same SWC as collocation | | | U1TUB | UC1CA | 1.66 | 15.81 | 11.39 | 6.61 | 6.61 | | | | | | |
| | Voice Grade COCI - DS1 to DS0 Channel System - per month used for a Local Loop | | | UEA | 1D1VG | 0.4689 | 11.98 | 11.39 | 6.61 | 6.61 | | | | | | |
| | Voice Grade COCI - DS1 to DS0 Channel System - per month used for connection to a channelized DS1 Local Channel in the same SWC as collocation | | | U1TUC | 1D1VG | 0.4689 | 11.98 | 11.39 | 6.61 | 6.61 | | | | | | |
| | DS3 to DS1 Channel System per month | | | UNC3X | MQ3 | 121.90 | | | | | | | | | | |
| | STS-1 to DS1 Channel System per month | | | UNCSX | MQ3 | 121.90 | | | | | | | | | | |
| | DS1 COCI used with Loop per month | | | USL | UC1D1 | 7.35 | 15.81 | 11.39 | 6.61 | 6.61 | | | | | | |
| | DS1 COCI (used for connection to a channelized DS1 Local Channel in the same SWC as collocation) per month | | | U1TUA | UC1D1 | 7.35 | 15.81 | 11.39 | 6.61 | 6.61 | | | | | | |
| | DS1 COCI used with Interoffice Channel per month | | | U1TD1 | UC1D1 | 7.35 | 15.81 | 11.39 | 6.61 | 6.61 | | | | | | |
| | DS3 Interface Unit (DS1 COCI) used with Local Channel per month | | | ULDD1 | UC1D1 | 7.35 | 15.81 | 11.39 | 6.61 | 6.61 | | | | | | |
| **UNBUNDLED LOCAL EXCHANGE SWITCHING(PORTS)** | | | | | | | | | | | | | | | | |
| | **Exchange Ports** | | | | | | | | | | | | | | | |
| | **NOTE: Although the Port Rate includes all available features in GA, KY, LA & TN, the desired features will need to be ordered using retail USOCs** | | | | | | | | | | | | | | | |
| | **2-WIRE VOICE GRADE LINE PORT RATES (RES)** | | | | | | | | | | | | | | | |
| | Exchange Ports - 2-Wire Analog Line Port- Res. | | | UEPSR | UEPRL | 1.09 | 2.42 | 2.31 | 1.37 | 1.28 | | | | | | |
| | Exchange Ports - 2-Wire Analog Line Port with Caller ID - Res. | | | UEPSR | UEPRC | 1.09 | 2.42 | 2.31 | 1.37 | 1.28 | | | | | | |
| | Exchange Ports - 2-Wire Analog Line Port outgoing only - Res. | | | UEPSR | UEPRO | 1.09 | 2.42 | 2.31 | 1.37 | 1.28 | | | | | | |
| | Exchange Ports - 2-Wire VG unbundled res, low usage line port with Caller ID (LUM) | | | UEPSR | UEPAP | 1.09 | 2.42 | 2.31 | 1.37 | 1.28 | | | | | | |
| | Exchange Ports - 2-Wire Voice Georgia basic dialing port without Caller ID | | | UEPSR | UEPWC | 1.09 | 2.42 | 2.31 | 1.37 | 1.28 | | | | | | |
| | 2-Wire voice unbundled Georgia basic dialing port for use with Caller ID - res | | | UEPSR | UEPWQ | 1.09 | 2.42 | 2.31 | 1.37 | 1.28 | | | | | | |
| | 2-Wire voice unbundled Georgia basic dialing port - outgoing only | | | UEPSR | UEPWR | 1.09 | 2.42 | 2.31 | 1.37 | 1.28 | | | | | | |

## UNBUNDLED NETWORK ELEMENTS - Georgia

| CATEGORY | RATE ELEMENTS | Interim | Zone | BCS | USOC | RATES ($) | | | | | Svc Order Submitted Elec per LSR | Svc Order Submitted Manually per LSR | Attachment: 2 Incremental Charge - Manual Svc Order vs. Electronic-1st | Attachment: 2 Incremental Charge - Manual Svc Order vs. Electronic-Add'l | Exhibit: A Incremental Charge - Manual Svc Order vs. Electronic-Disc 1st | Exhibit: A Incremental Charge - Manual Svc Order vs. Electronic-Disc Add'l |
|---|---|---|---|---|---|---|---|---|---|---|---|---|---|---|---|---|
| | | | | | | Rec | Nonrecurring | | Nonrecurring Disconnect | | OSS Rates ($) | | | | | |
| | | | | | | | First | Add'l | First | Add'l | SOMEC | SOMAN | SOMAN | SOMAN | SOMAN | SOMAN |
| | 2-Wire voice unbundled Low Usage Line Port without Caller ID Capability | | | UEPSR | UEPRT | 1.09 | 2.42 | 2.31 | 1.37 | 1.28 | | | | | | |
| | 2-Wire Voice Grade Unbundled Port without Caller ID capability, Georgia | | | UEPSR | UEPRV | 1.09 | 2.42 | 2.31 | 1.37 | 1.28 | | | | | | |
| | 2-Wire Voice Grade Unbundled Port with Caller ID capability, Georgia | | | UEPSR | UEPRU | 1.09 | 2.42 | 2.31 | 1.37 | 1.28 | | | | | | |
| | Subsequent Activity | | | UEPSR | USASC | 0.00 | 0.00 | 0.00 | | | | | | | | |
| **FEATURES** | | | | | | | | | | | | | | | | |
| | All Available Vertical Features | | | UEPSR | UEPVF | 0.775 | 0.00 | 0.00 | | | | | | | | |
| **2-WIRE VOICE GRADE LINE PORT RATES (BUS)** | | | | | | | | | | | | | | | | |
| | Exchange Ports - 2-Wire Analog Line Port without Caller ID - Bus | | | UEPSB | UEPBL | 1.09 | 2.42 | 2.31 | 1.37 | 1.28 | | | | | | |
| | Exchange Ports - 2-Wire VG unbundled Line Port with unbundled port with Caller+E484 ID - Bus. | | | UEPSB | UEPBC | 1.09 | 2.42 | 2.31 | 1.37 | 1.28 | | | | | | |
| | Exchange Ports - 2-Wire Voice Georgia Business Basic Dialing Port, with Caller ID capability | | | UEPSB | UEPWP | 1.09 | 2.42 | 2.31 | 1.37 | 1.28 | | | | | | |
| | Exchange Ports - 2-Wire Analog Line Port outgoing only - Bus. | | | UEPSB | UEPBO | 1.09 | 2.42 | 2.31 | 1.37 | 1.28 | | | | | | |
| | Exhange Ports - 2-Wire VG unbundled incoming only port with Caller ID - Bus | | | UEPSB | UEPB1 | 1.09 | 2.42 | 2.31 | 1.37 | 1.28 | | | | | | |
| | Exchange Ports - 2-Wire Voice Georgia Business Dialing Plan without Caller ID | | | UEPSB | UEPWD | 1.09 | 2.42 | 2.31 | 1.37 | 1.28 | | | | | | |
| | 2-Wire voice unbundled Incoming Only Port without Caller ID Capability | | | UEPSB | UEPBE | 1.09 | 2.42 | 2.31 | 1.37 | 1.28 | | | | | | |
| | Subsequent Activity | | | UEPSB | USASC | 0.00 | 0.00 | 0.00 | | | | | | | | |
| **FEATURES** | | | | | | | | | | | | | | | | |
| | All Available Vertical Features | | | UEPSB | UEPVF | 0.775 | 0.00 | 0.00 | | | | | | | | |
| **EXCHANGE PORT RATES (DID & PBX)** | | | | | | | | | | | | | | | | |
| | 2-Wire VG Unbundled 2-Way PBX Trunk - Res | | | UEPSE | UEPRD | 1.09 | 28.88 | 13.63 | 11.48 | 0.83 | | | | | | |
| | 2-Wire VG Line Side Unbundled 2-Way PBX Trunk - Bus | | | UEPSP | UEPPC | 1.09 | 28.88 | 13.63 | 11.48 | 0.83 | | | | | | |
| | 2-Wire VG Line Side Unbundled Outward PBX Trunk - Bus | | | UEPSP | UEPPO | 1.09 | 28.88 | 13.63 | 11.48 | 0.83 | | | | | | |
| | 2-Wire VG Line Side Unbundled Incoming PBX Trunk - Bus | | | UEPSP | UEPP1 | 1.09 | 28.88 | 13.63 | 11.48 | 0.83 | | | | | | |
| | 2-Wire Analog Long Distance Terminal PBX Trunk - Bus | | | UEPSP | UEPLD | 1.09 | 28.88 | 13.63 | 11.48 | 0.83 | | | | | | |
| | 2-Wire Voice Unbundled PBX LD Terminal Ports | | | UEPSP | UEPLD | 1.09 | 28.88 | 13.63 | 11.48 | 0.83 | | | | | | |
| | 2-Wire Vice Unbundled 2-Way PBX Usage Port | | | UEPSP | UEPXA | 1.09 | 28.88 | 13.63 | 11.48 | 0.83 | | | | | | |
| | 2-Wire Voice Unbundled PBX Toll Terminal Hotel Ports | | | UEPSP | UEPXB | 1.09 | 28.88 | 13.63 | 11.48 | 0.83 | | | | | | |
| | 2-Wire Voice Unbundled PBX LD DDD Terminals Port | | | UEPSP | UEPXC | 1.09 | 28.88 | 13.63 | 11.48 | 0.83 | | | | | | |
| | 2-Wire Voice Unbundled PBX LD Terminal Switchboard Port | | | UEPSP | UEPXD | 1.09 | 28.88 | 13.63 | 11.48 | 0.83 | | | | | | |
| | 2-Wire Voice Unbundled PBX LD Terminal Switchboard IDD Capable Port | | | UEPSP | UEPXE | 1.09 | 28.88 | 13.63 | 11.48 | 0.83 | | | | | | |
| | 2-Wire Voice Unbundled 2-Way PBX Hotel/Hospital Economy Administrative Calling Port | | | UEPSP | UEPXL | 1.09 | 28.88 | 13.63 | 11.48 | 0.83 | | | | | | |
| | 2-Wire Voice Unbundled 2-Way PBX Hotel/Hospital Economy Room Calling Port | | | UEPSP | UEPXM | 1.09 | 28.88 | 13.63 | 11.48 | 0.83 | | | | | | |
| | 2-Wire Voice Unbundled 1-Way Outgoing PBX Hotel/Hospital Discount Room Calling Port | | | UEPSP | UEPXO | 1.09 | 28.88 | 13.63 | 11.48 | 0.83 | | | | | | |
| | 2-Wire Voice Unbundled 1-Way Outgoing PBX Measured Port | | | UEPSP | UEPXS | 1.09 | 28.88 | 13.63 | 11.48 | 0.83 | | | | | | |
| | 2-Wire voice unbundled Georgia basic dialing port - 1-Way Oudial Trunk | | | UEPSP | UEPWS | 1.09 | 28.88 | 13.63 | 11.48 | 0.83 | | | | | | |
| | 2-Wire voice unbundled Georgia basic dialing port - 2-Way Trunk | | | UEPSP | UEPWT | 1.09 | 28.88 | 13.63 | 11.48 | 0.83 | | | | | | |
| | 2-Wire voice unbundled Georgia basic dialing port - 2-way PBX Trunk | | | UEPSP | UEPPQ | 1.09 | 28.88 | 13.63 | 11.48 | 0.83 | | | | | | |
| | Subsequent Activity | | | UEPSP | USASC | 0.00 | 0.00 | 0.00 | | | | | | | | |
| **FEATURES** | | | | | | | | | | | | | | | | |
| | All Available Vertical Features | | | UEPSP UEPSE | UEPVF | 0.775 | 0.00 | 0.00 | | | | | | | | |
| **EXCHANGE PORT RATES (COIN)** | | | | | | | | | | | | | | | | |
| | Exchange Ports - Coin Port | | | | | 1.09 | 2.42 | 2.31 | 1.37 | 1.28 | | | | | | |
| **NOTE: Transmission/usage charges associated with POTS circuit switched usage will also apply to circuit switched voice and/or circuit switched data transmission by B-Channels associated with 2-wire ISDN ports.** | | | | | | | | | | | | | | | | |

## UNBUNDLED NETWORK ELEMENTS - Georgia

| CATEGORY | RATE ELEMENTS | Interim | Zone | BCS | USOC | RATES ($) | | | | | Svc Order Submitted Elec per LSR | Svc Order Submitted Manually per LSR | Attachment: 2 Incremental Charge - Manual Svc Order vs. Electronic- 1st | Attachment: 2 Incremental Charge - Manual Svc Order vs. Electronic- Add'l | Exhibit: A Incremental Charge - Manual Svc Order vs. Electronic- Disc 1st | Exhibit: A Incremental Charge - Manual Svc Order vs. Electronic- Disc Add'l |
|---|---|---|---|---|---|---|---|---|---|---|---|---|---|---|---|---|
| | | | | | | Rec | Nonrecurring | | Nonrecurring Disconnect | | OSS Rates ($) | | | | | |
| | | | | | | | First | Add'l | First | Add'l | SOMEC | SOMAN | SOMAN | SOMAN | SOMAN | SOMAN |
| | NOTE: Access to B Channel or D Channel Packet capabilities will be available only through BFR/New Business Request Process. Rates for the packet capabilities will be determined via the Bona Fide Request/New Business Request Process. | | | | | | | | | | | | | | | |
| UNBUNDLED LOCAL EXCHANGE SWITCHING(PORTS) | | | | | | | | | | | | | | | | |
| | EXCHANGE PORT RATES | | | | | | | | | | | | | | | |
| | The DS1 Port rates below for 4-Wire DDITS Trunk Port and 4-Wire ISDN Port in this rate exhibit apply to the embedded base in place as of 10/2/03 until 4/1/04. After 4/1/04 these rates shall revert to tariff rates or a separate agreement. | | | | | | | | | | | | | | | |
| | Requests for 4-Wire DDITS Trunk Ports with 4-Wire ISDN DS1 Ports after the effective date of this amendment shall be provided pursuant to a separate agreement or tariff at BellSouth's discretion. | | | | | | | | | | | | | | | |
| | Exchange Ports - 2-Wire DID Port | | | UEPEX | UEPP2 | 5.50 | 122.26 | 18.65 | 54.82 | 3.45 | | | | | | |
| | Exchange Ports - DDITS Port - 4-Wire DS1 Port with DID capability (E:4/1/2004) | | | UEPDD | UEPDD | 41.20 | 200.96 | 93.00 | 65.81 | 2.33 | | | | | | |
| | Exchange Ports - 2-Wire ISDN Port (See Notes below.) | | | UEPTX, UEPSX | U1PMA | 6.09 | 76.39 | 51.50 | 45.67 | 10.36 | | | | | | |
| | All Features Offered | | | UEPTX, UEPSX | UEPVF | 0.775 | 0.00 | 0.00 | | | | | | | | |
| | Exchange Ports - 2-Wire ISDN Port -- Channel Profiles | | | UEPTX, UEPSX | U1UMA | 0.00 | 0.00 | 0.00 | | | | | | | | |
| | NOTE: Transmission/usage charges associated with POTS circuit switched usage will also apply to circuit switched voice and/or circuit switched data transmission by B-Channels associated with 2-wire ISDN ports. | | | | | | | | | | | | | | | |
| | NOTE: Access to B Channel or D Channel Packet capabilities will be available only through BFR/New Business Request Process. Rates for the packet capabilities will be determined via the Bona Fide Request/New Business Request Process. | | | | | | | | | | | | | | | |
| | EXCHANGE PORT RATES (continued) | | | | | | | | | | | | | | | |
| | Exchange Ports - 4-Wire ISDN DS1 Port with Detailed E911 Locator Capability (E:4/1/2004) | | | UEPEX | UEPEX | 65.13 | 198.74 | 97.29 | 72.95 | 17.69 | | | | | | |
| | Exchange Ports - 4-Wire ISDN DS1 Port (E:4/1/2004) | | | UEPDX | UEPDX | 65.13 | 198.74 | 97.29 | 72.95 | 17.69 | | | | | | |
| | Physical Collocation - DS1 Cross-Connects | | | UEPEX UEPDX | PE1P1 | 0.3726 | | | | | | | | | | |
| | Virtual collocation - Special Access & UNE, cross-connect per DS1 | | | UEPEX UEPDX | CNC1X | 0.3726 | | | | | | | | | | |
| | Detailed E911 with Locator Capability (required with UEPEX port) | | | | | | | | | | | | | | | |
| | Unbundled Exchange Ports, 4-Wire ISDN DS1 Port - E911 Locator Capability - Initial Profile Establishment per CLEC per State | | | UEPEX | UEP1A | 0.00 | 1,818.00 | | | | | | | | | |
| | Unbundled Exchange Ports, 4-Wire ISDN DS1 Port - E911 Locator Capability - Subsequent Profile Changes, Additions, Deletions | | | UEPEX | UEP1B | 0.00 | 176.57 | | | | | | | | | |
| | New or Additional PRI Telephone Numbers | | | | | | | | | | | | | | | |
| | Unbundled Exchange Ports, 4-Wire ISDN DS1 Port - E911 Locator Capability 2-way Telephone Numbers, per number in E911 profile [New or Additional] | | | UEPEX | UEP1C | 0.0703 | 0.50 | | | | | | | | | |
| | Unbundled Exchange Ports, 4-Wire ISDN DS1 Port - E911 Locator Capability - Outdial Telephone Numbers, per number in E911 profile [New or Additional] | | | UEPEX | UEP1D | 0.0703 | 10.72 | 10.72 | | | | | | | | |
| | Unbundled Exchange Ports, 4-Wire ISDN DS1 Port - Inward Telephone Numbers - Inward Data Only Option [New or Additional] | | | UEPDX | UEP1E | 0.00 | 0.50 | | | | | | | | | |
| | Exchange Ports - 4-Wire ISDN DS1 Port - Subsequent [New] Inward Tel Numbers [Customer Testing Purposes] | | | UEPEX | PR7ZT | 0.00 | 21.43 | 21.43 | | | | | | | | |
| | LOCAL NUMBER PORTABILITY | | | | | | | | | | | | | | | |
| | Local Number Portability (1 per port) | | | UEPEX UEPDX | LNPCN | 1.75 | | | | | | | | | | |
| | INTERFACE (Provsioning Only) | | | | | | | | | | | | | | | |
| | Voice/Data | | | UEPEX | PR71V | 0.00 | 0.00 | 0.00 | | | | | | | | |
| | Digital Data | | | UEPEX | PR71D | 0.00 | 0.00 | 0.00 | | | | | | | | |
| | Inward Data | | | UEPDX | PR71E | 0.00 | 0.00 | 0.00 | | | | | | | | |
| | New or Additional Channel | | | | | | | | | | | | | | | |
| | New or Additional - Voice/Data "B" Channel | | | UEPEX | PR7BV | 0.00 | 28.71 | | | | | | | | | |
| | New or Additional - Digital Data "B" Channel | | | UEPEX | PR7BF | 0.00 | 28.71 | | | | | | | | | |
| | New or Additional Inward Data "B" Channel | | | UEPDX | PR7BD | 0.00 | 28.71 | | | | | | | | | |
| | New or Additional Useage Sensitive Voice Data "B" Channel | | | UEPEX | PR7BS | 0.00 | | | | | | | | | | |
| | New or Additional Useage Sensitive Digital Data "B" Channel | | | UEPEX | PR7BU | 0.00 | | | | | | | | | | |
| | New or Additional PRI "D" Channel | | | UEPEX | PR7EX | 0.00 | 28.71 | | | | | | | | | |
| | CALL TYPES | | | | | | | | | | | | | | | |
| | Inward | | | UEPEX UEPDX | PR7C1 | 0.00 | 0.00 | 0.00 | | | | | | | | |
| | Outward | | | UEPEX | PR7CO | 0.00 | 0.00 | 0.00 | | | | | | | | |
| | Two-way | | | UEPEX | PR7CC | 0.00 | 0.00 | 0.00 | | | | | | | | |
| | UNBUNDLED PORT with REMOTE CALL FORWARDING CAPABILITY | | | | | | | | | | | | | | | |
| | UNBUNDLED REMOTE CALL FORWARDING SERVICE - RESIDENCE | | | | | | | | | | | | | | | |
| | Unbundled Remote Call Forwarding Service, Area Calling, Res | | | UEPVR | UERAC | 1.09 | 2.42 | 2.31 | 1.37 | 1.28 | | | | | | |

| UNBUNDLED NETWORK ELEMENTS - Georgia | | | | | | | | | | | | | | Attachment: 2 | | Exhibit: A | |
|---|---|---|---|---|---|---|---|---|---|---|---|---|---|---|---|---|---|
| CATEGORY | | RATE ELEMENTS | Interim | Zone | BCS | USOC | RATES ($) | | | | | Svc Order Submitted Elec per LSR | Svc Order Submitted Manually per LSR | Incremental Charge - Manual Svc Order vs. Electronic-1st | Incremental Charge - Manual Svc Order vs. Electronic-Add'l | Incremental Charge - Manual Svc Order vs. Electronic-Disc 1st | Incremental Charge - Manual Svc Order vs. Electronic-Disc Add'l |
| | | | | | | | Rec | Nonrecurring | | Nonrecurring Disconnect | | OSS Rates ($) | | | | | |
| | | | | | | | | First | Add'l | First | Add'l | SOMEC | SOMAN | SOMAN | SOMAN | SOMAN | SOMAN |
| | | Unbundled Remote Call Forwarding Service, Local Calling - Res | | | UEPVR | UERLC | 1.09 | 2.42 | 2.31 | 1.37 | 1.28 | | | | | | |
| | | Unbundled Remote Call Forwarding Service, InterLATA - Res | | | UEPVR | UERTE | 1.09 | 2.42 | 2.31 | 1.37 | 1.28 | | | | | | |
| | | Unbundled Remote Call Forwarding Service, IntraLATA - Res | | | UEPVR | UERTR | 1.09 | 2.42 | 2.31 | 1.37 | 1.28 | | | | | | |
| | Non-Recurring | | | | | | | | | | | | | | | | |
| | | Unbundled Remote Call Forwarding Service - Conversion - Switch-as-is | | | UEPVR | USAC2 | | 2.01 | 0.31 | | | | | | | | |
| | | Unbundled Remote Call Forwarding Service - Conversion with allowed change (PIC and LPIC) | | | UEPVR | USACC | | 2.01 | 0.31 | | | | | | | | |
| | UNBUNDLED REMOTE CALL FORWARDING - Bus | | | | | | | | | | | | | | | | |
| | | Unbundled Remote Call Forwarding Service, Area Calling - Bus | | | UEPVB | UERAC | 1.09 | 2.42 | 2.31 | 1.37 | 1.28 | | | | | | |
| | | Unbundled Remote Call Forwarding Service, Local Calling - Bus | | | UEPVB | UERLC | 1.09 | 2.42 | 2.31 | 1.37 | 1.28 | | | | | | |
| | | Unbundled Remote Call Forwarding Service, InterLATA - Bus | | | UEPVB | UERTE | 1.09 | 2.42 | 2.31 | 1.37 | 1.28 | | | | | | |
| | | Unbundled Remote Call Forwarding Service, IntraLATA - Bus | | | UEPVB | UERTR | 1.09 | 2.42 | 2.31 | 1.37 | 1.28 | | | | | | |
| | | Unbundled Remote Call Forwarding Service Expanded and Exception Local Calling | | | UEPVB | UERVJ | 1.09 | 2.42 | 2.31 | 1.37 | 1.28 | | | | | | |
| | Non-Recurring | | | | | | | | | | | | | | | | |
| | | Unbundled Remote Call Forwarding Service - Conversion - Switch-as-is | | | UEPVB | USAC2 | | 2.01 | 0.31 | | | | | | | | |
| | | Unbundled Remote Call Forwarding Service - Conversion with allowed change (PIC and LPIC) | | | UEPVB | USACC | | 2.01 | 0.31 | | | | | | | | |
| UNBUNDLED LOCAL SWITCHING, PORT USAGE | | | | | | | | | | | | | | | | | |
| | End Office Switching (Port Usage) | | | | | | | | | | | | | | | | |
| | | End Office Switching Function, Per MOU | | | | | 0.0006153 | | | | | | | | | | |
| | | End Office Trunk Port - Shared, Per MOU | | | | | 0.0001226 | | | | | | | | | | |
| | Tandem Switching (Port Usage) (Local or Access Tandem) | | | | | | | | | | | | | | | | |
| | | Tandem Switching Function Per MOU | | | | | 0.0000972 | | | | | | | | | | |
| | | Tandem Trunk Port - Shared, Per MOU | | | | | 0.0001557 | | | | | | | | | | |
| | | Tandem Switching Function Per MOU (Melded) | | | | | 0.000017904 | | | | | | | | | | |
| | | Tandem Trunk Port - Shared, Per MOU (Melded) | | | | | 0.00002868 | | | | | | | | | | |
| | | Melded Factor: 18.42% of the Tandem Rate | | | | | | | | | | | | | | | |
| | Common Transport | | | | | | | | | | | | | | | | |
| | | Common Transport - Per Mile, Per MOU | | | | | 0.0000027 | | | | | | | | | | |
| | | Common Transport - Facilities Termination Per MOU | | | | | 0.0001914 | | | | | | | | | | |
| UNBUNDLED PORT/LOOP COMBINATIONS - COST BASED RATES | | | | | | | | | | | | | | | | | |
| | Cost Based Rates are applied where BellSouth is required by FCC and/or State Commission rule to provide Unbundled Local Switching or Switch Ports. | | | | | | | | | | | | | | | | |
| | Features shall apply to the Unbundled Port/Loop Combination - Cost Based Rate section in the same manner as they are applied to the Stand-Alone Unbundled Port section of this Rate Exhibit. | | | | | | | | | | | | | | | | |
| | End Office and Tandem Switching Usage and Common Transport Usage rates in the Port section of this rate exhibit shall apply to all combinations of loop/port network elements except for UNE Coin Port/Loop Combinations. | | | | | | | | | | | | | | | | |
| | The first and additional Port nonrecurring charges apply to Not Currently Combined Combos. For Currently Combined Combos the nonrecurring charges shall be those identified in the Nonrecurring - Currently Combined sections. | | | | | | | | | | | | | | | | |
| | 2-WIRE VOICE GRADE LOOP WITH 2-WIRE LINE PORT (RES) | | | | | | | | | | | | | | | | |
| | UNE Port/Loop Combination Rates | | | | | | | | | | | | | | | | |
| | | 2-Wire VG Loop/Port Combo - Zone 1 | | 1 | | | 10.46 | | | | | | | | | | |
| | | 2-Wire VG Loop/Port Combo - Zone 2 | | 2 | | | 15.76 | | | | | | | | | | |
| | | 2-Wire VG Loop/Port Combo - Zone 3 | | 3 | | | 32.56 | | | | | | | | | | |
| | UNE Loop Rates | | | | | | | | | | | | | | | | |
| | | 2-Wire Voice Grade Loop (SL1) - Zone 1 | | 1 | UEPRX | UEPLX | 9.56 | | | | | | | | | | |
| | | 2-Wire Voice Grade Loop (SL1) - Zone 2 | | 2 | UEPRX | UEPLX | 14.86 | | | | | | | | | | |
| | | 2-Wire Voice Grade Loop (SL1) - Zone 3 | | 3 | UEPRX | UEPLX | 31.66 | | | | | | | | | | |
| | 2-Wire Voice Grade Line Port Rates (Res) | | | | | | | | | | | | | | | | |
| | | 2-Wire voice unbundled port - residence | | | UEPRX | UEPRL | 0.9019 | 10.05 | 7.36 | 1.37 | 1.28 | | | | | | |
| | | 2-Wire voice unbundled port with Caller ID - res | | | UEPRX | UEPRC | 0.9019 | 10.05 | 7.36 | 1.37 | 1.28 | | | | | | |
| | | 2-Wire voice unbundled port outgoing only - res | | | UEPRX | UEPRO | 0.9019 | 10.05 | 7.36 | 1.37 | 1.28 | | | | | | |
| | | 2-Wire voice unbundles res, low usage line port with Caller ID (LUM) | | | UEPRX | UEPAP | 0.9019 | 10.05 | 7.36 | 1.37 | 1.28 | | | | | | |
| | | 2-Wire voice unbundled Georgia basic dialing port without Caller ID capability - res | | | UEPRX | UEPWC | 0.9019 | 10.05 | 7.36 | 1.37 | 1.28 | | | | | | |

## UNBUNDLED NETWORK ELEMENTS - Georgia

| CATEGORY | RATE ELEMENTS | Interim | Zone | BCS | USOC | RATES ($) | | | | | Svc Order Submitted Elec per LSR | Svc Order Submitted Manually per LSR | Attachment: 2 Incremental Charge - Manual Svc Order vs. Electronic-1st | Attachment: 2 Incremental Charge - Manual Svc Order vs. Electronic-Add'l | Exhibit: A Incremental Charge - Manual Svc Order vs. Electronic-Disc 1st | Exhibit: A Incremental Charge - Manual Svc Order vs. Electronic-Disc Add'l |
|---|---|---|---|---|---|---|---|---|---|---|---|---|---|---|---|---|
| | | | | | | Rec | Nonrecurring | | Nonrecurring Disconnect | | OSS Rates ($) | | | | | |
| | | | | | | | First | Add'l | First | Add'l | SOMEC | SOMAN | SOMAN | SOMAN | SOMAN | SOMAN |
| | 2-Wire voice unbundled Georgia basic dialing port for use with Caller ID - res | | | UEPRX | UEPWQ | 0.9019 | 10.05 | 7.36 | 1.37 | 1.28 | | | | | | |
| | 2-Wire voice unbundled Georgia basic dialing port - outgoing only | | | UEPRX | UEPWR | 0.9019 | 10.05 | 7.36 | 1.37 | 1.28 | | | | | | |
| | 2-Wire voice unbundled Low Usage Line Port without Caller ID Capability | | | UEPRX | UEPRT | 0.9019 | 10.05 | 7.36 | 1.37 | 1.28 | | | | | | |
| | 2-Wire Voice Grade Unbundled Port without Caller ID, Georgia | | | UEPRX | UEPRV | 0.9019 | 10.05 | 7.36 | 1.37 | 1.28 | | | | | | |
| | 2-Wire Voice Grade Unbundled Port with Caller ID, Georgia | | | UEPRX | UEPRU | 0.9019 | 10.05 | 7.36 | 1.37 | 1.28 | | | | | | |
| **FEATURES** | | | | | | | | | | | | | | | | |
| | All Features Offered | | | UEPRX | UEPVF | 0.775 | 0.00 | 0.00 | | | | | | | | |
| **LOCAL NUMBER PORTABILITY** | | | | | | | | | | | | | | | | |
| | Local Number Portability (1 per port) | | | UEPRX | LNPCX | 0.35 | | | | | | | | | | |
| **NONRECURRING CHARGES (NRCs) - CURRENTLY COMBINED** | | | | | | | | | | | | | | | | |
| | 2-Wire Voice Grade Loop / Line Port Combination - Conversion - Switch-as-is | | | UEPRX | USAC2 | | 0.10 | 0.10 | | | | | | | | |
| | 2-Wire Voice Grade Loop / Line Port Combination - Conversion - Switch with change | | | UEPRX | USACC | | 0.10 | 0.10 | | | | | | | | |
| **ADDITIONAL NRCs** | | | | | | | | | | | | | | | | |
| | 2-Wire Voice Grade Loop/Line Port Combination - Subsequent Activity | | | UEPRX | USAS2 | 0.00 | 0.00 | 0.00 | | | | | | | | |
| | Unbundled Miscellaneous Rate Element, Tag Loop at End User Premise | | | UEPRX | URETL | | 8.33 | 0.83 | | | | | | | | |
| **OFF/ON PREMISES EXTENSION CHANNELS** | | | | | | | | | | | | | | | | |
| | 2 Wire Analog Voice Grade Extension Loop – Non-Design | | 1 | UEPRX | UEAEN | 10.51 | 40.02 | 9.99 | 5.61 | 1.72 | | | | | | |
| | 2 Wire Analog Voice Grade Extension Loop – Non-Design | | 2 | UEPRX | UEAEN | 15.85 | 40.02 | 9.99 | 5.61 | 1.72 | | | | | | |
| | 2 Wire Analog Voice Grade Extension Loop – Non-Design | | 3 | UEPRX | UEAEN | 31.97 | 40.02 | 9.99 | 5.61 | 1.72 | | | | | | |
| | 2 Wire Analog Voice Grade Extension Loop – Design | | 1 | UEPRX | UEAED | 11.57 | 79.85 | 24.65 | 18.92 | 7.87 | | | | | | |
| | 2 Wire Analog Voice Grade Extension Loop – Design | | 2 | UEPRX | UEAED | 16.95 | 79.85 | 24.65 | 18.92 | 7.87 | | | | | | |
| | 2 Wire Analog Voice Grade Extension Loop – Design | | 3 | UEPRX | UEAED | 33.08 | 79.85 | 24.65 | 18.92 | 7.87 | | | | | | |
| **INTEROFFICE TRANSPORT** | | | | | | | | | | | | | | | | |
| | Interoffice Transport - Dedicated - 2 Wire Voice Grade - Facility Termination | | | UEPRX | U1TV2 | 12.87 | 48.46 | 19.48 | 16.58 | 5.00 | | | | | | |
| | Interoffice Transport - Dedicated - 2 Wire Voice Grade - Per Mile or Fraction Mile | | | UEPRX | U1TVM | 0.0057 | 0.00 | 0.00 | | | | | | | | |
| **2-WIRE VOICE GRADE LOOP WITH 2-WIRE LINE PORT (BUS)** | | | | | | | | | | | | | | | | |
| **UNE Port/Loop Combination Rates** | | | | | | | | | | | | | | | | |
| | 2-Wire VG Loop/Port Combo - Zone 1 | | 1 | | | 10.46 | | | | | | | | | | |
| | 2-Wire VG Loop/Port Combo - Zone 2 | | 2 | | | 15.76 | | | | | | | | | | |
| | 2-Wire VG Loop/Port Combo - Zone 3 | | 3 | | | 32.56 | | | | | | | | | | |
| **UNE Loop Rates** | | | | | | | | | | | | | | | | |
| | 2-Wire Voice Grade Loop (SL1) - Zone 1 | | 1 | UEPBX | UEPLX | 9.56 | | | | | | | | | | |
| | 2-Wire Voice Grade Loop (SL1) - Zone 2 | | 2 | UEPBX | UEPLX | 14.86 | | | | | | | | | | |
| | 2-Wire Voice Grade Loop (SL1) - Zone 3 | | 3 | UEPBX | UEPLX | 31.66 | | | | | | | | | | |
| **2-Wire Voice Grade Line Port (Bus)** | | | | | | | | | | | | | | | | |
| | 2-Wire voice unbundled port without Caller ID - bus | | | UEPBX | UEPBL | 0.9019 | 10.05 | 7.36 | 1.37 | 1.28 | | | | | | |
| | 2-Wire voice unbundled port with Caller + E484 ID - bus | | | UEPBX | UEPBC | 0.9019 | 10.05 | 7.36 | 1.37 | 1.28 | | | | | | |
| | 2-Wire voice unbundled port outgoing only - bus | | | UEPBX | UEPBO | 0.9019 | 10.05 | 7.36 | 1.37 | 1.28 | | | | | | |
| | 2-Wire voice unbundled incoming only port with Caller ID - Bus | | | UEPBX | UEPB1 | 0.9019 | 10.05 | 7.36 | 1.37 | 1.28 | | | | | | |
| | 2-Wire voice unbundled Georgia basic dialing port, without Caller ID capability - bus | | | UEPBX | UEPWD | 0.9019 | 10.05 | 7.36 | 1.37 | 1.28 | | | | | | |
| | 2-Wire voice unbundled Georgia basic dialing port for use with Caller ID - bus | | | UEPBX | UEPWP | 0.9019 | 10.05 | 7.36 | 1.37 | 1.28 | | | | | | |
| | 2-Wire voice unbundled Incoming Only Port without Caller ID Capability | | | UEPBX | UEPBE | 0.9019 | 10.05 | 7.36 | 1.37 | 1.28 | | | | | | |
| **LOCAL NUMBER PORTABILITY** | | | | | | | | | | | | | | | | |
| | Local Number Portability (1 per port) | | | UEPBX | LNPCX | 0.35 | | | | | | | | | | |
| **FEATURES** | | | | | | | | | | | | | | | | |
| | All Features Offered | | | UEPBX | UEPVF | 0.775 | 0.00 | 0.00 | | | | | | | | |
| **NONRECURRING CHARGES (NRCs) - CURRENTLY COMBINED** | | | | | | | | | | | | | | | | |

| UNBUNDLED NETWORK ELEMENTS - Georgia | | | | | | | | | | | | | | Attachment: 2 | | Exhibit: A | |
|---|---|---|---|---|---|---|---|---|---|---|---|---|---|---|---|---|---|
| CATEGORY | RATE ELEMENTS | Interim | Zone | BCS | USOC | RATES ($) | | | | | Svc Order Submitted Elec per LSR | Svc Order Submitted Manually per LSR | Incremental Charge - Manual Svc Order vs. Electronic-1st | Incremental Charge - Manual Svc Order vs. Electronic-Add'l | Incremental Charge - Manual Svc Order vs. Electronic-Disc 1st | Incremental Charge - Manual Svc Order vs. Electronic-Disc Add'l |
| | | | | | | Rec | Nonrecurring | | Nonrecurring Disconnect | | OSS Rates ($) | | | | | |
| | | | | | | | First | Add'l | First | Add'l | SOMEC | SOMAN | SOMAN | SOMAN | SOMAN | SOMAN |
| | 2-Wire Voice Grade Loop / Line Port Combination - Conversion - Switch-as-is | | | UEPBX | USAC2 | | 0.10 | 0.10 | | | | | | | | |
| | 2-Wire Voice Grade Loop / Line Port Combination - Conversion - Switch with change | | | UEPBX | USACC | | 0.10 | 0.10 | | | | | | | | |
| ADDITIONAL NRCs | | | | | | | | | | | | | | | | |
| | 2-Wire Voice Grade Loop/Line Port Combination - Subsequent Activity | | | UEPBX | USAS2 | | 0.00 | 0.00 | | | | | | | | |
| | Unbundled Miscellaneous Rate Element, Tag Loop at End User Premise | | | UEPBX | URETL | | 8.33 | 0.83 | | | | | | | | |
| OFF/ON PREMISES EXTENSION CHANNELS | | | | | | | | | | | | | | | | |
| | 2 Wire Analog Voice Grade Extension Loop – Non-Design | | 1 | UEPBX | UEAEN | 10.51 | 40.02 | 9.99 | 5.61 | 1.72 | | | | | | |
| | 2 Wire Analog Voice Grade Extension Loop – Non-Design | | 2 | UEPBX | UEAEN | 15.85 | 40.02 | 9.99 | 5.61 | 1.72 | | | | | | |
| | 2 Wire Analog Voice Grade Extension Loop – Non-Design | | 3 | UEPBX | UEAEN | 31.97 | 40.02 | 9.99 | 5.61 | 1.72 | | | | | | |
| | 2 Wire Analog Voice Grade Extension Loop – Design | | 1 | UEPBX | UEAED | 11.57 | 79.85 | 24.65 | 18.92 | 7.87 | | | | | | |
| | 2 Wire Analog Voice Grade Extension Loop – Design | | 2 | UEPBX | UEAED | 16.95 | 79.85 | 24.65 | 18.92 | 7.87 | | | | | | |
| | 2 Wire Analog Voice Grade Extension Loop – Design | | 3 | UEPBX | UEAED | 33.08 | 79.85 | 24.65 | 18.92 | 7.87 | | | | | | |
| INTEROFFICE TRANSPORT | | | | | | | | | | | | | | | | |
| | Interoffice Transport - Dedicated - 2 Wire Voice Grade - Facility Termination | | | UEPBX | U1TV2 | 12.87 | 48.46 | 19.48 | 16.58 | 5.00 | | | | | | |
| | Interoffice Transport - Dedicated - 2 Wire Voice Grade - Per Mile or Fraction Mile | | | UEPBX | U1TVM | 0.0057 | 0.00 | 0.00 | | | | | | | | |
| 2-WIRE VOICE GRADE LOOP WITH 2-WIRE LINE PORT (RES - PBX) | | | | | | | | | | | | | | | | |
| UNE Port/Loop Combination Rates | | | | | | | | | | | | | | | | |
| | 2-Wire VG Loop/Port Combo - Zone 1 | | 1 | | | 10.46 | | | | | | | | | | |
| | 2-Wire VG Loop/Port Combo - Zone 2 | | 2 | | | 15.76 | | | | | | | | | | |
| | 2-Wire VG Loop/Port Combo - Zone 3 | | 3 | | | 32.56 | | | | | | | | | | |
| UNE Loop Rates | | | | | | | | | | | | | | | | |
| | 2-Wire Voice Grade Loop (SL 1) - Zone 1 | | 1 | UEPRG | UEPLX | 9.56 | | | | | | | | | | |
| | 2-Wire Voice Grade Loop (SL 1) - Zone 2 | | 2 | UEPRG | UEPLX | 14.86 | | | | | | | | | | |
| | 2-Wire Voice Grade Loop (SL 1) - Zone 3 | | 3 | UEPRG | UEPLX | 31.66 | | | | | | | | | | |
| 2-Wire Voice Grade Line Port Rates (RES - PBX) | | | | | | | | | | | | | | | | |
| | 2-Wire VG Unbundled Combination 2-Way PBX Trunk Port - Res | | | UEPRG | UEPRD | 0.9019 | 10.05 | 7.36 | 1.37 | 1.28 | | | | | | |
| LOCAL NUMBER PORTABILITY | | | | | | | | | | | | | | | | |
| | Local Number Portability (1 per port) | | | UEPRG | LNPCP | 3.15 | 0.00 | 0.00 | | | | | | | | |
| FEATURES | | | | | | | | | | | | | | | | |
| | All Features Offered | | | UEPRG | UEPVF | 0.775 | 0.00 | 0.00 | | | | | | | | |
| NONRECURRING CHARGES (NRCs) - CURRENTLY COMBINED | | | | | | | | | | | | | | | | |
| | 2-Wire Voice Grade Loop/ Line Port Combination (PBX) - Conversion - Switch-As-Is | | | UEPRG | USAC2 | | 0.10 | 0.10 | | | | | | | | |
| | 2-Wire Voice Grade Loop/ Line Port Combination (PBX) - Conversion - Switch with Change | | | UEPRG | USACC | | 0.10 | 0.10 | | | | | | | | |
| ADDITIONAL NRCs | | | | | | | | | | | | | | | | |
| | 2-Wire Voice Grade Loop/ Line Port Combination (PBX) - Subsequent Activity | | | UEPRG | USAS2 | 0.00 | 0.00 | 0.00 | | | | | | | | |
| | PBX Subsequent Activity - Change/Rearrange Multiline Hunt Group | | | | | | 6.70 | 6.70 | | | | | | | | |
| | Unbundled Miscellaneous Rate Element, Tag Loop at End User Premise | | | UEPRG | URETL | | 8.33 | 0.83 | | | | | | | | |
| OFF/ON PREMISES EXTENSION CHANNELS | | | | | | | | | | | | | | | | |
| | Local Channel Voice grade, per termination | | 1 | UEPRG | P2JHX | 11.57 | 79.85 | 24.65 | 18.92 | 7.87 | | | | | | |
| | Local Channel Voice grade, per termination | | 2 | UEPRG | P2JHX | 16.95 | 79.85 | 24.65 | 18.92 | 7.87 | | | | | | |
| | Local Channel Voice grade, per termination | | 3 | UEPRG | P2JHX | 33.08 | 79.85 | 24.65 | 18.92 | 7.87 | | | | | | |
| | Non-Wire Direct Serve Channel Voice Grade | | 1 | UEPRG | SDD2X | 12.74 | 56.92 | 7.70 | 4.40 | 0.02 | | | | | | |
| | Non-Wire Direct Serve Channel Voice Grade | | 2 | UEPRG | SDD2X | 19.76 | 56.92 | 7.70 | 4.40 | 0.02 | | | | | | |
| | Non-Wire Direct Serve Channel Voice Grade | | 3 | UEPRG | SDD2X | 37.18 | 56.92 | 7.70 | 4.40 | 0.02 | | | | | | |
| INTEROFFICE TRANSPORT | | | | | | | | | | | | | | | | |
| | Interoffice Transport - Dedicated - 2 Wire Voice Grade - Facility Termination | | | UEPRG | U1TV2 | 12.87 | 48.46 | 19.48 | 16.58 | 5.00 | | | | | | |

| UNBUNDLED NETWORK ELEMENTS - Georgia | | | | | | | | | | | | | Attachment: 2 | | Exhibit: A | |
|---|---|---|---|---|---|---|---|---|---|---|---|---|---|---|---|---|
| CATEGORY | RATE ELEMENTS | Interim | Zone | BCS | USOC | RATES ($) | | | | | Svc Order Submitted Elec per LSR | Svc Order Submitted Manually per LSR | Incremental Charge - Manual Svc Order vs. Electronic-1st | Incremental Charge - Manual Svc Order vs. Electronic-Add'l | Incremental Charge - Manual Svc Order vs. Electronic-Disc 1st | Incremental Charge - Manual Svc Order vs. Electronic-Disc Add'l |
| | | | | | | Rec | Nonrecurring | | Nonrecurring Disconnect | | OSS Rates ($) | | | | | |
| | | | | | | | First | Add'l | First | Add'l | SOMEC | SOMAN | SOMAN | SOMAN | SOMAN | SOMAN |
| | Interoffice Transport - Dedicated - 2 Wire Voice Grade - Per Mile or Fraction Mile | | | UEPRG | U1TVM | 0.0057 | 0.00 | 0.00 | | | | | | | | |
| | **2-WIRE VOICE GRADE LOOP WITH 2-WIRE LINE PORT (BUS - PBX)** | | | | | | | | | | | | | | | |
| | **UNE Port/Loop Combination Rates** | | | | | | | | | | | | | | | |
| | 2-Wire VG Loop/Port Combo - Zone 1 | | 1 | | | 10.46 | | | | | | | | | | |
| | 2-Wire VG Loop/Port Combo - Zone 2 | | 2 | | | 15.76 | | | | | | | | | | |
| | 2-Wire VG Loop/Port Combo - Zone 3 | | 3 | | | 32.56 | | | | | | | | | | |
| | **UNE Loop Rates** | | | | | | | | | | | | | | | |
| | 2-Wire Voice Grade Loop (SL 1) - Zone 1 | | 1 | UEPPX | UEPLX | 9.56 | | | | | | | | | | |
| | 2-Wire Voice Grade Loop (SL 1) - Zone 2 | | 2 | UEPPX | UEPLX | 14.86 | | | | | | | | | | |
| | 2-Wire Voice Grade Loop (SL 1) - Zone 3 | | 3 | UEPPX | UEPLX | 31.66 | | | | | | | | | | |
| | **2-Wire Voice Grade Line Port Rates (BUS - PBX)** | | | | | | | | | | | | | | | |
| | Line Side Unbundled Combination 2-Way PBX Trunk Port - Bus | | | UEPPX | UEPPC | 0.9019 | 10.05 | 7.36 | 1.37 | 1.28 | | | | | | |
| | Line Side Unbundled Outward PBX Trunk Port - Bus | | | UEPPX | UEPPO | 0.9019 | 10.05 | 7.36 | 1.37 | 1.28 | | | | | | |
| | Line Side Unbundled Incoming PBX Trunk Port - Bus | | | UEPPX | UEPP1 | 0.9019 | 10.05 | 7.36 | 1.37 | 1.28 | | | | | | |
| | 2-Wire Voice Unbundled PBX LD Terminal Ports | | | UEPPX | UEPLD | 0.9019 | 10.05 | 7.36 | 1.37 | 1.28 | | | | | | |
| | 2-Wire Voice Unbundled 2-Way Combination PBX Usage Port | | | UEPPX | UEPXA | 0.9019 | 10.05 | 7.36 | 1.37 | 1.28 | | | | | | |
| | 2-Wire Voice Unbundled PBX Toll Terminal Hotel Ports | | | UEPPX | UEPXB | 0.9019 | 10.05 | 7.36 | 1.37 | 1.28 | | | | | | |
| | 2-Wire Voice Unbundled PBX LD DDD Terminals Port | | | UEPPX | UEPXC | 0.9019 | 10.05 | 7.36 | 1.37 | 1.28 | | | | | | |
| | 2-Wire Voice Unbundled PBX LD Terminal Switchboard Port | | | UEPPX | UEPXD | 0.9019 | 10.05 | 7.36 | 1.37 | 1.28 | | | | | | |
| | 2-Wire Voice Unbundled PBX LD Terminal Switchboard IDD Capable Port | | | UEPPX | UEPXE | 0.9019 | 10.05 | 7.36 | 1.37 | 1.28 | | | | | | |
| | 2-Wire Voice Unbundled 2-Way PBX Hotel/Hospital Economy Administrative Calling Port | | | UEPPX | UEPXL | 0.9019 | 10.05 | 7.36 | 1.37 | 1.28 | | | | | | |
| | 2-Wire Voice Unbundled 2-Way PBX Hotel/Hospital Economy Room Calling Port | | | UEPPX | UEPXM | 0.9019 | 10.05 | 7.36 | 1.37 | 1.28 | | | | | | |
| | 2-Wire Voice Unbundled 1-Way Outgoing PBX Hotel/Hospital Discount Room Calling Port | | | UEPPX | UEPXO | 0.9019 | 10.05 | 7.36 | 1.37 | 1.28 | | | | | | |
| | 2-Wire Voice Unbundled 1-Way Outgoing PBX Measured Port | | | UEPPX | UEPXS | 0.9019 | 10.05 | 7.36 | 1.37 | 1.28 | | | | | | |
| | 2-Wire voice unbundled Georgia basic dialing port - 1-Way Oudial Trunk | | | UEPPX | UEPWS | 0.9019 | 10.05 | 7.36 | 1.37 | 1.28 | | | | | | |
| | 2-Wire voice unbundled Georgia basic dialing port - 2-Way Trunk | | | UEPPX | UEPWT | 0.9019 | 10.05 | 7.36 | 1.37 | 1.28 | | | | | | |
| | 2-Wire voice unbundled Georgia basic dialing port - 2-way PBX Trunk | | | UEPPX | UEPPQ | 0.9019 | 10.05 | 7.36 | 1.37 | 1.28 | | | | | | |
| | 2-Wire voice unbundled Georgia basic dialing port - PBX LD Terminal Ports | | | UEPPX | UEPPS | 0.9019 | 10.05 | 7.36 | 1.37 | 1.28 | | | | | | |
| | 2-Wire voice unbundled Georgia basic dialing port - PBX Toll Terminal Ports | | | UEPPX | UEPPT | 0.9019 | 10.05 | 7.36 | 1.37 | 1.28 | | | | | | |
| | 2-Wire voice unbundled Georgia basic dialing port - PBX LD DDD Terminal Port | | | UEPPX | UEPPU | 0.9019 | 10.05 | 7.36 | 1.37 | 1.28 | | | | | | |
| | 2-Wire voice unbundled Georgia basic dialing port - PBX LD Terminal Switchboard Port | | | UEPPX | UEPPV | 0.9019 | 10.05 | 7.36 | 1.37 | 1.28 | | | | | | |
| | 2-Wire voice unbundled Georgia basic dialing port - PBX LD Terminal Switchboard DDD Capable Port | | | UEPPX | UEPPW | 0.9019 | 10.05 | 7.36 | 1.37 | 1.28 | | | | | | |
| | 2-Wire voice unbundled Georgia basic dialing port - PBX 2-Way Trunk | | | UEPPX | UEPPC | 0.9019 | 10.05 | 7.36 | 1.37 | 1.28 | | | | | | |
| | **LOCAL NUMBER PORTABILITY** | | | | | | | | | | | | | | | |
| | Local Number Portability (1 per port) | | | UEPPX | LNPCP | 3.15 | 0.00 | 0.00 | | | | | | | | |
| | **FEATURES** | | | | | | | | | | | | | | | |
| | All Features Offered | | | UEPPX | UEPVF | 0.775 | 0.00 | 0.00 | | | | | | | | |
| | **NONRECURRING CHARGES (NRCs) - CURRENTLY COMBINED** | | | | | | | | | | | | | | | |
| | 2-Wire Voice Grade Loop/ Line Port Combination (PBX) - Conversion - Switch-As-Is | | | UEPPX | USAC2 | | 0.10 | 0.10 | | | | | | | | |
| | 2-Wire Voice Grade Loop/ Line Port Combination (PBX) - Conversion - Switch with Change | | | UEPPX | USACC | | 0.10 | 0.10 | | | | | | | | |
| | **ADDITIONAL NRCs** | | | | | | | | | | | | | | | |

| UNBUNDLED NETWORK ELEMENTS - Georgia | | | | | | | | | | | | | Attachment: 2 | | Exhibit: A | |
|---|---|---|---|---|---|---|---|---|---|---|---|---|---|---|---|---|
| CATEGORY | RATE ELEMENTS | Interim | Zone | BCS | USOC | RATES ($) | | | | | Svc Order Submitted Elec per LSR | Svc Order Submitted Manually per LSR | Incremental Charge - Manual Svc Order vs. Electronic-1st | Incremental Charge - Manual Svc Order vs. Electronic-Add'l | Incremental Charge - Manual Svc Order vs. Electronic-Disc 1st | Incremental Charge - Manual Svc Order vs. Electronic-Disc Add'l |
| | | | | | | Rec | Nonrecurring | | Nonrecurring Disconnect | | OSS Rates ($) | | | | | |
| | | | | | | | First | Add'l | First | Add'l | SOMEC | SOMAN | SOMAN | SOMAN | SOMAN | SOMAN |
| | 2-Wire Voice Grade Loop/ Line Port Combination (PBX) - Subsequent Activity | | | UEPPX | USAS2 | 0.00 | 0.00 | 0.00 | | | | | | | | |
| | PBX Subsequent Activity - Change/Rearrange Multiline Hunt Group | | | | | | 6.70 | 6.70 | | | | | | | | |
| | Unbundled Miscellaneous Rate Element, Tag Loop at End User Premise | | | UEPPX | URETL | | 8.33 | 0.83 | | | | | | | | |
| OFF/ON PREMISES EXTENSION CHANNELS | | | | | | | | | | | | | | | | |
| | Local Channel Voice grade, per termination | | 1 | UEPPX | P2JHX | 11.57 | 79.85 | 24.65 | 18.92 | 7.87 | | | | | | |
| | Local Channel Voice grade, per termination | | 2 | UEPPX | P2JHX | 16.95 | 79.85 | 24.65 | 18.92 | 7.87 | | | | | | |
| | Local Channel Voice grade, per termination | | 3 | UEPPX | P2JHX | 33.08 | 79.85 | 24.65 | 18.92 | 7.87 | | | | | | |
| | Non-Wire Direct Serve Channel Voice Grade | | 1 | UEPPX | SDD2X | 12.74 | 56.92 | 7.70 | 4.40 | 0.02 | | | | | | |
| | Non-Wire Direct Serve Channel Voice Grade | | 2 | UEPPX | SDD2X | 19.76 | 56.92 | 7.70 | 4.40 | 0.02 | | | | | | |
| | Non-Wire Direct Serve Channel Voice Grade | | 3 | UEPPX | SDD2X | 37.18 | 56.92 | 7.70 | 4.40 | 0.02 | | | | | | |
| INTEROFFICE TRANSPORT | | | | | | | | | | | | | | | | |
| | Interoffice Transport - Dedicated - 2 Wire Voice Grade - Facility Termination | | | UEPPX | U1TV2 | 12.87 | 48.46 | 19.48 | 16.58 | 5.00 | | | | | | |
| | Interoffice Transport - Dedicated - 2 Wire Voice Grade - Per Mile or Fraction Mile | | | UEPPX | U1TVM | 0.0057 | 0.00 | 0.00 | | | | | | | | |
| 2-WIRE VOICE GRADE LOOP WITH 2-WIRE ANALOG LINE COIN PORT | | | | | | | | | | | | | | | | |
| UNE Port/Loop Combination Rates | | | | | | | | | | | | | | | | |
| | 2-Wire VG Coin Port/Loop Combo – Zone 1 | | 1 | | | 10.46 | | | | | | | | | | |
| | 2-Wire VG Coin Port/Loop Combo – Zone 2 | | 2 | | | 15.76 | | | | | | | | | | |
| | 2-Wire VG Coin Port/Loop Combo – Zone 3 | | 3 | | | 32.56 | | | | | | | | | | |
| UNE Loop Rates | | | | | | | | | | | | | | | | |
| | 2-Wire Voice Grade Loop (SL1) - Zone 1 | | 1 | UEPCO | UEPLX | 9.56 | | | | | | | | | | |
| | 2-Wire Voice Grade Loop (SL1) - Zone 2 | | 2 | UEPCO | UEPLX | 14.86 | | | | | | | | | | |
| | 2-Wire Voice Grade Loop (SL1) - Zone 3 | | 3 | UEPCO | UEPLX | 31.66 | | | | | | | | | | |
| 2-Wire Voice Grade Line Ports (COIN) | | | | | | | | | | | | | | | | |
| | 2-Wire Coin 2-Way with Operator Screening (GA) | | | UEPCO | UEPGC | 0.9019 | 10.05 | 7.36 | 1.37 | 1.28 | | | | | | |
| | 2-Wire Coin 2-Way with Operator Screening and Blocking: 011, 900/976, 1+DDD (GA) | | | UEPCO | UEP2G | 0.9019 | 10.05 | 7.36 | 1.37 | 1.28 | | | | | | |
| | 2-Wire Coin 2-Way with Operator Screening and 011 Blocking (GA) | | | UEPCO | UEPGA | 0.9019 | 10.05 | 7.36 | 1.37 | 1.28 | | | | | | |
| | 2-Wire Coin 2-Way with Operator Screening and 900/976 Blocking (GA) | | | UEPCO | UEPGB | 0.9019 | 10.05 | 7.36 | 1.37 | 1.28 | | | | | | |
| | 2-Wire Coin 2-Way with Operator Screening and Blocking: 900/976, 1+DDD, 011+, and Local (GA) | | | UEPCO | UEPCH | 0.9019 | 10.05 | 7.36 | 1.37 | 1.28 | | | | | | |
| | 2-Wire Coin Outward with Operator Screening and 011 Blocking (GA, KY, MS) | | | UEPCO | UEPRJ | 0.9019 | 10.05 | 7.36 | 1.37 | 1.28 | | | | | | |
| | 2-Wire Coin Outward with Operator Screening and Blocking: 900/976, 1+DDD, 011+, and Local (FL, GA) | | | UEPCO | UEPCQ | 0.9019 | 10.05 | 7.36 | 1.37 | 1.28 | | | | | | |
| | 2-Wire 2-Way Smartline with 900/976 (all states except LA) | | | UEPCO | UEPCK | 0.9019 | 10.05 | 7.36 | 1.37 | 1.28 | | | | | | |
| | 2-Wire Coin Outward Smartline with 900/976 (all states except LA) | | | UEPCO | UEPCR | 0.9019 | 10.05 | 7.36 | 1.37 | 1.28 | | | | | | |
| ADDITIONAL UNE COIN PORT/LOOP (RC) | | | | | | | | | | | | | | | | |
| | UNE Coin Port/Loop Combo Usage (Flat Rate) | | | UEPCO | URECU | 3.59 | 0.00 | 0.00 | 0.00 | 0.00 | | | | | | |
| LOCAL NUMBER PORTABILITY | | | | | | | | | | | | | | | | |
| | Local Number Portability (1 per port) | | | UEPCO | LNPCX | 0.35 | | | | | | | | | | |
| NONRECURRING CHARGES - CURRENTLY COMBINED | | | | | | | | | | | | | | | | |
| | 2-Wire Voice Grade Loop / Line Port Combination - Conversion - Switch-as-is | | | UEPCO | USAC2 | | 0.10 | 0.10 | | | | | | | | |
| | 2-Wire Voice Grade Loop / Line Port Combination - Conversion - Switch with change | | | UEPCO | USACC | | 0.10 | 0.10 | | | | | | | | |
| ADDITIONAL NRCs | | | | | | | | | | | | | | | | |
| | 2-Wire Voice Grade Loop/Line Port Combination - Subsequent Activity | | | UEPCO | USAS2 | | 0.00 | 0.00 | | | | | | | | |
| | Unbundled Miscellaneous Rate Element, Tag Loop at End User Premise | | | UEPCO | URETL | | 8.33 | 0.83 | | | | | | | | |
| 2-WIRE VOICE LOOP/ 2WIRE VOICE GRADE IO TRANSPORT/ 2-WIRE LINE PORT (RES) | | | | | | | | | | | | | | | | |

| UNBUNDLED NETWORK ELEMENTS - Georgia | | | | | | | | | | | | | | Attachment: 2 | | Exhibit: A | |
|---|---|---|---|---|---|---|---|---|---|---|---|---|---|---|---|---|---|
| CATEGORY | RATE ELEMENTS | Interim | Zone | BCS | USOC | RATES ($) | | | | | Svc Order Submitted Elec per LSR | Svc Order Submitted Manually per LSR | Incremental Charge - Manual Svc Order vs. Electronic-1st | Incremental Charge - Manual Svc Order vs. Electronic-Add'l | Incremental Charge - Manual Svc Order vs. Electronic-Disc 1st | Incremental Charge - Manual Svc Order vs. Electronic-Disc Add'l |
| | | | | | | Rec | Nonrecurring | | Nonrecurring Disconnect | | OSS Rates ($) | | | | | |
| | | | | | | | First | Add'l | First | Add'l | SOMEC | SOMAN | SOMAN | SOMAN | SOMAN | SOMAN |
| | **UNE Port/Loop Combination Rates** | | | | | | | | | | | | | | | |
| | 2-Wire VG Loop/IO Tranport/Port Combo - Zone 1 | | 1 | | | 25.53 | | | | | | | | | | |
| | 2-Wire VG Loop/IO Tranport/Port Combo - Zone 2 | | 2 | | | 30.92 | | | | | | | | | | |
| | 2-Wire VG Loop/IO Tranport/Port Combo - Zone 3 | | 3 | | | 47.04 | | | | | | | | | | |
| | **UNE Loop Rates** | | | | | | | | | | | | | | | |
| | 2-Wire Voice Grade Loop (SL2) - Zone 1 | | 1 | UEPFR | UECF2 | 11.57 | | | | | | | | | | |
| | 2-Wire Voice Grade Loop (SL2) - Zone 2 | | 2 | UEPFR | UECF2 | 16.95 | | | | | | | | | | |
| | 2-Wire Voice Grade Loop (SL2) - Zone 3 | | 3 | UEPFR | UECF2 | 33.08 | | | | | | | | | | |
| | **2-Wire Voice Grade Line Port Rates (Res)** | | | | | | | | | | | | | | | |
| | 2-Wire voice unbundled port - residence | | | UEPFR | UEPRL | 1.09 | 166.05 | 43.66 | 41.89 | 15.44 | | | | | | |
| | 2-Wire voice unbundled port with Caller ID - res | | | UEPFR | UEPRC | 1.09 | 166.05 | 43.66 | 41.89 | 15.44 | | | | | | |
| | 2-Wire voice unbundled port outgoing only - res | | | UEPFR | UEPRO | 1.09 | 166.05 | 43.66 | 41.89 | 15.44 | | | | | | |
| | 2-Wire voice unbundles res, low usage line port with Caller ID (LUM) | | | UEPFR | UEPAP | 1.09 | 166.05 | 43.66 | 41.89 | 15.44 | | | | | | |
| | 2-Wire voice unbundled Georgia basic dialing port, without Caller ID capability - res | | | UEPFR | UEPWC | 1.09 | 166.05 | 43.66 | 41.89 | 15.44 | | | | | | |
| | 2-Wire voice unbundled Georgia basic dialing port for use with Caller ID - res | | | UEPFR | UEPWQ | 1.09 | 166.05 | 43.66 | 41.89 | 15.44 | | | | | | |
| | 2-Wire voice unbundled Georgia basic dialing port - outgoing only | | | UEPFR | UEPWR | 1.09 | 166.05 | 43.66 | 41.89 | 15.44 | | | | | | |
| | **INTEROFFICE TRANSPORT** | | | | | | | | | | | | | | | |
| | Interoffice Transport - Dedicated - 2 Wire Voice Grade - Facility Termination | | | UEPFR | U1TV2 | 12.87 | 48.46 | 19.48 | 16.58 | 5.00 | | | | | | |
| | Interoffice Transport - Dedicated - 2 Wire Voice Grade - Per Mile or Fraction Mile | | | UEPFR | 1L5XX | 0.0057 | 0.00 | 0.00 | | | | | | | | |
| | **FEATURES** | | | | | | | | | | | | | | | |
| | All Features Offered | | | UEPFR | UEPVF | 0.775 | 0.00 | 0.00 | | | | | | | | |
| | **LOCAL NUMBER PORTABILITY** | | | | | | | | | | | | | | | |
| | Local Number Portability (1 per port) | | | UEPFR | LNPCX | 0.35 | | | | | | | | | | |
| | **NONRECURRING CHARGES (NRCs) - CURRENTLY COMBINED** | | | | | | | | | | | | | | | |
| | 2-Wire Loop / Dedicated IO Transport / 2 Wire Line Port Combination - Conversion - Switch-as-Is | | | UEPFR | USAC2 | | 7.85 | 1.86 | | | | | | | | |
| | 2-Wire Loop / Dedicated IO Transport / 2 Wire Line Port Combination - Conversion - Switch-With-Change | | | UEPFR | USACC | | 7.85 | 1.86 | | | | | | | | |
| | Unbundled Miscellaneous Rate Element, Tag Designed Loop at End User Premise | | | UEPFR | URETN | | 11.19 | 1.10 | | | | | | | | |
| | **2-WIRE VOICE LOOP/ 2WIRE VOICE GRADE IO TRANSPORT/ 2-WIRE LINE PORT (BUS)** | | | | | | | | | | | | | | | |
| | **UNE Port/Loop Combination Rates** | | | | | | | | | | | | | | | |
| | 2-Wire VG Loop/IO Tranport/Port Combo - Zone 1 | | 1 | | | 25.53 | | | | | | | | | | |
| | 2-Wire VG Loop/IO Tranport/Port Combo - Zone 2 | | 2 | | | 30.92 | | | | | | | | | | |
| | 2-Wire VG Loop/IO Tranport/Port Combo - Zone 3 | | 3 | | | 47.04 | | | | | | | | | | |
| | **UNE Loop Rates** | | | | | | | | | | | | | | | |
| | 2-Wire Voice Grade Loop (SL2) - Zone 1 | | 1 | UEPFB | UECF2 | 11.57 | | | | | | | | | | |
| | 2-Wire Voice Grade Loop (SL2) - Zone 2 | | 2 | UEPFB | UECF2 | 16.95 | | | | | | | | | | |
| | 2-Wire Voice Grade Loop (SL2) - Zone 3 | | 3 | UEPFB | UECF2 | 33.08 | | | | | | | | | | |
| | **2-Wire Voice Grade Line Port (Bus)** | | | | | | | | | | | | | | | |
| | 2-Wire voice unbundled port without Caller ID - bus | | | UEPFB | UEPBL | 1.09 | 166.05 | 43.66 | 41.89 | 15.44 | | | | | | |
| | 2-Wire voice unbundled port with Caller + E484 ID - bus | | | UEPFB | UEPBC | 1.09 | 166.05 | 43.66 | 41.89 | 15.44 | | | | | | |
| | 2-Wire voice unbundled port outgoing only - bus | | | UEPFB | UEPBO | 1.09 | 166.05 | 43.66 | 41.89 | 15.44 | | | | | | |
| | 2-Wire voice unbundled incoming only port with Caller ID - Bus | | | UEPFB | UEPB1 | 1.09 | 166.05 | 43.66 | 41.89 | 15.44 | | | | | | |
| | 2-Wire voice unbundled Georgia basic dialing port, without Caller ID capability - bus | | | UEPFB | UEPWD | 1.09 | 166.05 | 43.66 | 41.89 | 15.44 | | | | | | |
| | 2-Wire voice unbundled Georgia basic dialing port for use with Caller ID - bus | | | UEPFB | UEPWP | 1.09 | 166.05 | 43.66 | 41.89 | 15.44 | | | | | | |
| | **LOCAL NUMBER PORTABILITY** | | | | | | | | | | | | | | | |
| | Local Number Portability (1 per port) | | | UEPFB | LNPCX | 0.35 | | | | | | | | | | |
| | **INTEROFFICE TRANSPORT** | | | | | | | | | | | | | | | |
| | Interoffice Transport - Dedicated - 2 Wire Voice Grade - Facility Termination | | | UEPFB | U1TV2 | 12.87 | 48.46 | 19.48 | 16.58 | 5.00 | | | | | | |

| UNBUNDLED NETWORK ELEMENTS - Georgia | | | | | | | | | | | | | | Attachment: 2 | | Exhibit: A | |
|---|---|---|---|---|---|---|---|---|---|---|---|---|---|---|---|---|---|
| CATEGORY | RATE ELEMENTS | Interim | Zone | BCS | USOC | RATES ($) | | | | | Svc Order Submitted Elec per LSR | Svc Order Submitted Manually per LSR | Incremental Charge - Manual Svc Order vs. Electronic-1st | Incremental Charge - Manual Svc Order vs. Electronic-Add'l | Incremental Charge - Manual Svc Order vs. Electronic-Disc 1st | Incremental Charge - Manual Svc Order vs. Electronic-Disc Add'l |
| | | | | | | Rec | Nonrecurring | | Nonrecurring Disconnect | | OSS Rates ($) | | | | | |
| | | | | | | | First | Add'l | First | Add'l | SOMEC | SOMAN | SOMAN | SOMAN | SOMAN | SOMAN |
| | Interoffice Transport - Dedicated - 2 Wire Voice Grade - Per Mile or Fraction Mile | | | UEPFB | 1L5XX | 0.0057 | 0.00 | 0.00 | | | | | | | | |
| FEATURES | | | | | | | | | | | | | | | | |
| | All Features Offered | | | UEPFB | UEPVF | 0.775 | 0.00 | 0.00 | | | | | | | | |
| NONRECURRING CHARGES (NRCs) - CURRENTLY COMBINED | | | | | | | | | | | | | | | | |
| | 2-Wire Loop / Dedicated IO Transport / 2 Wire Line Port Combination - Conversion - Switch-as-is | | | UEPFB | USAC2 | | 7.85 | 1.86 | | | | | | | | |
| | 2-Wire Loop / Dedicated IO Transport / 2 Wire Line Port Combination - Conversion - Switch with change | | | UEPFB | USACC | | 7.85 | 1.86 | | | | | | | | |
| | Unbundled Miscellaneous Rate Element, Tag Designed Loop at End User Premise | | | UEPFB | URETN | | 11.19 | 1.10 | | | | | | | | |
| 2-WIRE VOICE LOOP/ 2WIRE VOICE GRADE IO TRANSPORT/ 2-WIRE LINE PORT (PBX) | | | | | | | | | | | | | | | | |
| UNE Port/Loop Combination Rates | | | | | | | | | | | | | | | | |
| | 2-Wire VG Loop/IO Tranport/Port Combo - Zone 1 | | 1 | | | 25.53 | | | | | | | | | | |
| | 2-Wire VG Loop/IO Tranport/Port Combo - Zone 2 | | 2 | | | 30.92 | | | | | | | | | | |
| | 2-Wire VG Loop/IO Tranport/Port Combo - Zone 3 | | 3 | | | 47.04 | | | | | | | | | | |
| UNE Loop Rates | | | | | | | | | | | | | | | | |
| | 2-Wire Voice Grade Loop (SL2) - Zone 1 | | 1 | UEPFP | UECF2 | 11.57 | | | | | | | | | | |
| | 2-Wire Voice Grade Loop (SL2) - Zone 2 | | 2 | UEPFP | UECF2 | 16.95 | | | | | | | | | | |
| | 2-Wire Voice Grade Loop (SL2) - Zone 3 | | 3 | UEPFP | UECF2 | 33.08 | | | | | | | | | | |
| 2-Wire Voice Grade Line Port Rates (BUS - PBX) | | | | | | | | | | | | | | | | |
| | Line Side Unbundled Combination 2-Way PBX Trunk Port - Bus | | | UEPFP | UEPPC | 1.09 | 166.05 | 43.66 | 41.89 | 15.44 | | | | | | |
| | Line Side Unbundled Outward PBX Trunk Port - Bus | | | UEPFP | UEPPO | 1.09 | 166.05 | 43.66 | 41.89 | 15.44 | | | | | | |
| | Line Side Unbundled Incoming PBX Trunk Port - Bus | | | UEPFP | UEPP1 | 1.09 | 166.05 | 43.66 | 41.89 | 15.44 | | | | | | |
| | 2-Wire Voice Unbundled PBX LD Terminal Ports | | | UEPFP | UEPLD | 1.09 | 166.05 | 43.66 | 41.89 | 15.44 | | | | | | |
| | 2-Wire Voice Unbundled 2-Way Combination PBX Usage Port | | | UEPFP | UEPXA | 1.09 | 166.05 | 43.66 | 41.89 | 15.44 | | | | | | |
| | 2-Wire Voice Unbundled PBX Toll Terminal Hotel Ports | | | UEPFP | UEPXB | 1.09 | 166.05 | 43.66 | 41.89 | 15.44 | | | | | | |
| | 2-Wire Voice Unbundled PBX LD DDD Terminals Port | | | UEPFP | UEPXC | 1.09 | 166.05 | 43.66 | 41.89 | 15.44 | | | | | | |
| | 2-Wire Voice Unbundled PBX LD Terminal Switchboard Port | | | UEPFP | UEPXD | 1.09 | 166.05 | 43.66 | 41.89 | 15.44 | | | | | | |
| | 2-Wire Voice Unbundled PBX LD Terminal Switchboard IDD Capable Port | | | UEPFP | UEPXE | 1.09 | 166.05 | 43.66 | 41.89 | 15.44 | | | | | | |
| | 2-Wire Voice Unbundled 2-Way PBX Hotel/Hospital Economy Administrative Calling Port | | | UEPFP | UEPXL | 1.09 | 166.05 | 43.66 | 41.89 | 15.44 | | | | | | |
| | 2-Wire Voice Unbundled 2-Way PBX Hotel/Hospital Economy Room Calling Port | | | UEPFP | UEPXM | 1.09 | 166.05 | 43.66 | 41.89 | 15.44 | | | | | | |
| | 2-Wire Voice Unbundled 1-Way Outgoing PBX Hotel/Hospital Discount Room Calling Port | | | UEPFP | UEPXO | 1.09 | 166.05 | 43.66 | 41.89 | 15.44 | | | | | | |
| | 2-Wire Voice Unbundled 1-Way Outgoing PBX Measured Port | | | UEPFP | UEPXS | 1.09 | 166.05 | 43.66 | 41.89 | 15.44 | | | | | | |
| | 2-Wire voice unbundled Georgia basic dialing port - 1-Way Oudial Trunk | | | UEPFP | UEPWS | 1.09 | 166.05 | 43.66 | 41.89 | 15.44 | | | | | | |
| | 2-Wire voice unbundled Georgia basic dialing port - 2-Way Trunk | | | UEPFP | UEPWT | 1.09 | 166.05 | 43.66 | 41.89 | 15.44 | | | | | | |
| LOCAL NUMBER PORTABILITY | | | | | | | | | | | | | | | | |
| | Local Number Portability (1 per port) | | | UEPFP | LNPCP | 3.15 | 0.00 | 0.00 | | | | | | | | |
| INTEROFFICE TRANSPORT | | | | | | | | | | | | | | | | |
| | Interoffice Transport - Dedicated - 2 Wire Voice Grade - Facility Termination | | | UEPFP | U1TV2 | 12.87 | 48.46 | 19.48 | 16.58 | 5.00 | | | | | | |
| | Interoffice Transport - Dedicated - 2 Wire Voice Grade - Per Mile or Fraction Mile | | | UEPFP | 1L5XX | 0.0057 | 0.00 | 0.00 | | | | | | | | |
| FEATURES | | | | | | | | | | | | | | | | |
| | All Features Offered | | | UEPFP | UEPVF | 0.775 | 0.00 | 0.00 | | | | | | | | |
| NONRECURRING CHARGES (NRCs) - CURRENTLY COMBINED | | | | | | | | | | | | | | | | |
| | 2-Wire Loop / Dedicated IO Transport / 2 Wire Line Port Combination - Conversion - Switch-as-is | | | UEPFP | USAC2 | | 7.85 | 1.86 | | | | | | | | |
| | 2-Wire Loop / Dedicated IO Transport / 2 Wire Line Port Combination - Conversion - Switch with change | | | UEPFP | USACC | | 7.85 | 1.86 | | | | | | | | |
| | Unbundled Miscellaneous Rate Element, Tag Designed Loop at End User Premise | | | UEPFP | URETN | | 11.19 | 1.10 | | | | | | | | |

## UNBUNDLED NETWORK ELEMENTS - Georgia

| CATEGORY | RATE ELEMENTS | Interim | Zone | BCS | USOC | RATES ($) | | | | | Svc Order Submitted Elec per LSR | Svc Order Submitted Manually per LSR | Attachment: 2 | | Exhibit: A | |
|---|---|---|---|---|---|---|---|---|---|---|---|---|---|---|---|---|
| | | | | | | | | | | | | | Incremental Charge - Manual Svc Order vs. Electronic-1st | Incremental Charge - Manual Svc Order vs. Electronic-Add'l | Incremental Charge - Manual Svc Order vs. Electronic-Disc 1st | Incremental Charge - Manual Svc Order vs. Electronic-Disc Add'l |
| | | | | | | Rec | Nonrecurring | | Nonrecurring Disconnect | | OSS Rates ($) | | | | | |
| | | | | | | | First | Add'l | First | Add'l | SOMEC | SOMAN | SOMAN | SOMAN | SOMAN | SOMAN |
| **UNBUNDLED PORT/LOOP COMBINATIONS - COST BASED RATES** | | | | | | | | | | | | | | | | |
| | **2-WIRE VOICE GRADE LOOP- BUS ONLY - WITH 2-WIRE DID TRUNK PORT** | | | | | | | | | | | | | | | |
| | **UNE Port/Loop Combination Rates** | | | | | | | | | | | | | | | |
| | 2-Wire VG Loop/2-Wire DID Trunk Port Combo - UNE Zone 1 | | 1 | | | 17.05 | | | | | | | | | | |
| | 2-Wire VG Loop/2-Wire DID Trunk Port Combo - UNE Zone 2 | | 2 | | | 22.44 | | | | | | | | | | |
| | 2-Wire VG Loop/2-Wire DID Trunk Port Combo - UNE Zone 3 | | 3 | | | 38.56 | | | | | | | | | | |
| | **UNE Loop Rates** | | | | | | | | | | | | | | | |
| | 2-Wire Analog Voice Grade Loop - (SL2) - UNE Zone 1 | | 1 | UEPPX | UECD1 | 11.57 | | | | | | | | | | |
| | 2-Wire Analog Voice Grade Loop - (SL2) - UNE Zone 2 | | 2 | UEPPX | UECD1 | 16.95 | | | | | | | | | | |
| | 2-Wire Analog Voice Grade Loop - (SL2) - UNE Zone 3 | | 3 | UEPPX | UECD1 | 33.08 | | | | | | | | | | |
| | **UNE Port Rate** | | | | | | | | | | | | | | | |
| | Exchange Ports - 2-Wire DID Port | | | UEPPX | UEPD1 | 5.48 | 174.55 | 13.64 | 59.31 | 4.27 | | | | | | |
| | **NONRECURRING CHARGES - CURRENTLY COMBINED** | | | | | | | | | | | | | | | |
| | 2-Wire Voice Grade Loop / 2-Wire DID Trunk Port Combination - Switch-as-is | | | UEPPX | USAC1 | | 6.66 | 1.86 | | | | | | | | |
| | 2-Wire Voice Grade Loop / 2-Wire DID Trunk Port Conversion with BellSouth Allowable Changes | | | UEPPX | USA1C | | 6.66 | 1.86 | | | | | | | | |
| | **ADDITIONAL NRCs** | | | | | | | | | | | | | | | |
| | Unbundled Miscellaneous Rate Element, Tag Designed Loop at End User Premise | | | UEPPX | URETN | | 11.19 | 1.10 | | | | | | | | |
| | **Telephone Number/Trunk Group Establisment Charges** | | | | | | | | | | | | | | | |
| | DID Trunk Termination (One Per Port) | | | UEPPX | NDT | 0.00 | 0.00 | 0.00 | | | | | | | | |
| | DID Numbers, Establish Trunk Group and Provide First Group of 20 DID Numbers | | | UEPPX | NDZ | 0.00 | 0.00 | 0.00 | | | | | | | | |
| | Additional DID Numbers for each Group of 20 DID Numbers | | | UEPPX | ND4 | 0.00 | 0.00 | 0.00 | | | | | | | | |
| | DID Numbers, Non- consecutive DID Numbers , Per Number | | | UEPPX | ND5 | 0.00 | 0.00 | 0.00 | | | | | | | | |
| | Reserve Non-Consecutive DID numbers | | | UEPPX | ND6 | 0.00 | 0.00 | 0.00 | | | | | | | | |
| | Reserve DID Numbers | | | UEPPX | NDV | 0.00 | 0.00 | 0.00 | | | | | | | | |
| | **LOCAL NUMBER PORTABILITY** | | | | | | | | | | | | | | | |
| | Local Number Portability (1 per port) | | | UEPPX | LNPCP | 3.15 | 0.00 | 0.00 | | | | | | | | |
| | **2-WIRE ISDN DIGITAL GRADE LOOP WITH 2-WIRE ISDN DIGITAL LINE SIDE PORT** | | | | | | | | | | | | | | | |
| | **UNE Port/Loop Combination Rates** | | | | | | | | | | | | | | | |
| | 2W ISDN Digital Grade Loop/2W ISDN Digital Line Side Port - UNE Zone 1 | | 1 | UEPPB | UEPPR | 19.44 | | | | | | | | | | |
| | 2W ISDN Digital Grade Loop/2W ISDN Digital Line Side Port - UNE Zone 2 | | 2 | UEPPB | UEPPR | 24.45 | | | | | | | | | | |
| | 2W ISDN Digital Grade Loop/2W ISDN Digital Line Side Port - UNE Zone 3 | | 3 | UEPPB | UEPPR | 38.09 | | | | | | | | | | |
| | **UNE Loop Rates** | | | | | | | | | | | | | | | |
| | 2-Wire ISDN Digital Grade Loop - UNE Zone 1 | | 1 | UEPPB | UEPPR USL2X | 14.25 | | | | | | | | | | |
| | 2-Wire ISDN Digital Grade Loop - UNE Zone 2 | | 2 | UEPPB | UEPPR USL2X | 19.26 | | | | | | | | | | |
| | 2-Wire ISDN Digital Grade Loop - UNE Zone 3 | | 3 | UEPPB | UEPPR USL2X | 32.90 | | | | | | | | | | |
| | **UNE Port Rate** | | | | | | | | | | | | | | | |
| | Exchange Port - 2-Wire ISDN Line Side Port | | | UEPPB | UEPPR UEPPB | 5.19 | 161.36 | 141.68 | 43.68 | 8.37 | | | | | | |
| | **NONRECURRING CHARGES - CURRENTLY COMBINED** | | | | | | | | | | | | | | | |
| | 2-Wire ISDN Digital Grade Loop / 2-Wire ISDN Line Side Port Combination - Conversion | | | UEPPB | UEPPR USACB | 0.00 | 42.52 | 26.99 | | | | | | | | |
| | **ADDITIONAL NRCs** | | | | | | | | | | | | | | | |
| | 2-Wire ISDN Loop / 2-Wire ISDN Port Combination - Sub Actvy - Non Feature/Add Trunk | | | UEPPB | UEPPR USASB | | 0.00 | | | | | | | | | |
| | Unbundled Miscellaneous Rate Element, Tag Designed Loop at End User Premise | | | UEPPB | UEPPR URETN | | 11.19 | 1.10 | | | | | | | | |
| | Unbundled Miscellaneous Rate Element, Tag Loop at End User Premise | | | UEPPB | UEPPR URETL | | 8.33 | 0.83 | | | | | | | | |
| | **LOCAL NUMBER PORTABILITY** | | | | | | | | | | | | | | | |
| | Local Number Portability (1 per port) | | | UEPPB | UEPPR LNPCX | 0.35 | 0.00 | 0.00 | | | | | | | | |
| | **B-CHANNEL USER PROFILE ACCESS:** | | | | | | | | | | | | | | | |
| | CVS/CSD (DMS/5ESS) | | | UEPPB | UEPPR U1UCA | 0.00 | 0.00 | 0.00 | | | | | | | | |

## UNBUNDLED NETWORK ELEMENTS - Georgia

| CATEGORY | RATE ELEMENTS | Interim | Zone | BCS | USOC | RATES ($) | | | | | Svc Order Submitted Elec per LSR | Svc Order Submitted Manually per LSR | Attachment: 2 Incremental Charge - Manual Svc Order vs. Electronic-1st | Attachment: 2 Incremental Charge - Manual Svc Order vs. Electronic-Add'l | Exhibit: A Incremental Charge - Manual Svc Order vs. Electronic-Disc 1st | Exhibit: A Incremental Charge - Manual Svc Order vs. Electronic-Disc Add'l |
|---|---|---|---|---|---|---|---|---|---|---|---|---|---|---|---|---|
| | | | | | | Rec | Nonrecurring | | Nonrecurring Disconnect | | OSS Rates ($) | | | | | |
| | | | | | | | First | Add'l | First | Add'l | SOMEC | SOMAN | SOMAN | SOMAN | SOMAN | SOMAN |
| | CVS (EWSD) | | | UEPPB UEPPR | U1UCB | 0.00 | 0.00 | 0.00 | | | | | | | | |
| | CSD | | | UEPPB UEPPR | U1UCC | 0.00 | 0.00 | 0.00 | | | | | | | | |
| **B-CHANNEL AREA PLUS USER PROFILE ACCESS: (AL,KY,LA,MS SC,MS, & TN)** | | | | | | | | | | | | | | | | |
| **USER TERMINAL PROFILE** | | | | | | | | | | | | | | | | |
| | User Terminal Profile (EWSD only) | | | UEPPB UEPPR | U1UMA | 0.00 | 0.00 | 0.00 | | | | | | | | |
| **VERTICAL FEATURES** | | | | | | | | | | | | | | | | |
| | All Vertical Features - One per Channel B User Profile | | | UEPPB UEPPR | UEPVF | 0.775 | 0.00 | 0.00 | | | | | | | | |
| **INTEROFFICE CHANNEL MILEAGE** | | | | | | | | | | | | | | | | |
| | Interoffice Channel mileage each, including first mile and facilities termination | | | UEPPB UEPPR | M1GNC | 12.8757 | 48.46 | 19.48 | 16.58 | 5.00 | | | | | | |
| | Interoffice Channel mileage each, additional mile | | | UEPPB UEPPR | M1GNM | 0.0057 | 0.00 | 0.00 | | | | | | | | |
| **4-WIRE DS1 DIGITAL LOOP WITH 4-WIRE ISDN DS1 DIGITAL TRUNK PORT** | | | | | | | | | | | | | | | | |
| **The UNE-P DS1 combination rates below for in this rate exhibit apply to the embedded base in place as of 10/2/03 until 4/1/04. After 4/1/04 these rates shall revert to tariff rates or a separate commercial agreement.** | | | | | | | | | | | | | | | | |
| **Requests for 4-Wire DS1 Digital Loop with 4-Wire ISDN DS1 Digital Trunk Port after the effective date of this amendment shall be provided pursuant to a separate agreement or tariff at BellSouth's discretion.** | | | | | | | | | | | | | | | | |
| **UNE Port/Loop Combination Rates** | | | | | | | | | | | | | | | | |
| | 4W DS1 Digital Loop/4W ISDN DS1 Digital Trunk Port - UNE Zone 1 | | 1 | UEPPP | | 106.15 | | | | | | | | | | |
| | 4W DS1 Digital Loop/4W ISDN DS1 Digital Trunk Port - UNE Zone 2 | | 2 | UEPPP | | 111.54 | | | | | | | | | | |
| | 4W DS1 Digital Loop/4W ISDN DS1 Digital Trunk Port - UNE Zone 3 | | 3 | UEPPP | | 127.15 | | | | | | | | | | |
| **UNE Loop Rates** | | | | | | | | | | | | | | | | |
| | 4-Wire DS1 Digital Loop - UNE Zone 1 | | 1 | UEPPP | USL4P | 41.02 | | | | | | | | | | |
| | 4-Wire DS1 Digital Loop - UNE Zone 2 | | 2 | UEPPP | USL4P | 46.41 | | | | | | | | | | |
| | 4-Wire DS1 Digital Loop - UNE Zone 3 | | 3 | UEPPP | USL4P | 62.03 | | | | | | | | | | |
| **UNE Port Rate** | | | | | | | | | | | | | | | | |
| | Exchange Ports - 4-Wire ISDN DS1 Port (E:4/1/2004) | | | UEPPP | UEPPP | 65.13 | 365.73 | 187.42 | 73.41 | 21.80 | | | | | | |
| **NONRECURRING CHARGES - CURRENTLY COMBINED** | | | | | | | | | | | | | | | | |
| | 4-Wire DS1 Digital Loop / 4-Wire ISDN DS1 Digital Trunk Port Combination - Conversion -Switch-as-is (E:4/1/2004) | | | UEPPP | USACP | 0.00 | 122.56 | 77.97 | | | | | | | | |
| **ADDITIONAL NRCs** | | | | | | | | | | | | | | | | |
| | 4-Wire DS1 Loop/4-W ISDN Digtl Trk Port - Subsqt Actvy-Inward/two way Tel Nos. (except NC) | | | UEPPP | PR7TF | | 0.50 | | | | | | | | | |
| | 4-Wire DS1 Loop / 4-Wire ISDN DS1 Digital Trunk Port - Outward Tel Numbers (All States except NC) | | | UEPPP | PR7TO | | 10.72 | | | | | | | | | |
| | 4-Wire DS1 Loop / 4-Wire ISDN DS1 Digital Trk Port - Subsequent Inward Tel Numbers | | | UEPPP | PR7ZT | | 21.43 | | | | | | | | | |
| **LOCAL NUMBER PORTABILITY** | | | | | | | | | | | | | | | | |
| | Local Number Portability (1 per port) | | | UEPPP | LNPCN | 1.75 | | | | | | | | | | |
| **INTERFACE (Provsioning Only)** | | | | | | | | | | | | | | | | |
| | Voice/Data | | | UEPPP | PR71V | 0.00 | 0.00 | 0.00 | | | | | | | | |
| | Digital Data | | | UEPPP | PR71D | 0.00 | 0.00 | 0.00 | | | | | | | | |
| | Inward Data | | | UEPPP | PR71E | 0.00 | 0.00 | 0.00 | | | | | | | | |
| **New or Additional "B" Channel** | | | | | | | | | | | | | | | | |
| | New or Additional - Voice/Data B Channel | | | UEPPP | PR7BV | 0.00 | 13.59 | | | | | | | | | |
| | New or Additional - Digital Data B Channel | | | UEPPP | PR7BF | 0.00 | 13.59 | | | | | | | | | |
| | New or Additional Inward Data B Channel | | | UEPPP | PR7BD | 0.00 | 13.59 | | | | | | | | | |
| **CALL TYPES** | | | | | | | | | | | | | | | | |
| | Inward | | | UEPPP | PR7C1 | 0.00 | 0.00 | 0.00 | | | | | | | | |
| | Outward | | | UEPPP | PR7CO | 0.00 | 0.00 | 0.00 | | | | | | | | |
| | Two-way | | | UEPPP | PR7CC | 0.00 | 0.00 | 0.00 | | | | | | | | |
| **Interoffice Channel Mileage** | | | | | | | | | | | | | | | | |
| | Fixed Each Including First Mile | | | UEPPP | 1LN1A | 34.31 | 111.03 | 80.28 | 31.36 | 21.73 | | | | | | |
| | Each Airline-Fractional Additional Mile | | | UEPPP | 1LN1B | 0.1154 | | | | | | | | | | |
| **4-WIRE DS1 DIGITAL LOOP WITH 4-WIRE DDITS TRUNK PORT** | | | | | | | | | | | | | | | | |
| **The UNE-P DS1 combination rates below for in this rate exhibit apply to the embedded base in place as of 10/2/03 until 4/1/04. After 4/1/04 these rates shall revert to tariff rates or a separate commercial agreement.** | | | | | | | | | | | | | | | | |
| **Requests for 4-Wire DS1 Digital Loop with 4-Wire DDITS after the effective date of this amendment shall be provided pursuant to a separate agreement or tariff at BellSouth's discretion.** | | | | | | | | | | | | | | | | |
| **UNE Port/Loop Combination Rates** | | | | | | | | | | | | | | | | |
| | 4W DS1 Digital Loop/4W DDITS Trunk Port - UNE Zone 1 | | 1 | UEPDC | | 82.22 | | | | | | | | | | |

## UNBUNDLED NETWORK ELEMENTS - Georgia

| CATEGORY | RATE ELEMENTS | Interim | Zone | BCS | USOC | RATES ($) | | | | | Svc Order Submitted Elec per LSR | Svc Order Submitted Manually per LSR | Attachment: 2 Incremental Charge - Manual Svc Order vs. Electronic-1st | Attachment: 2 Incremental Charge - Manual Svc Order vs. Electronic-Add'l | Exhibit: A Incremental Charge - Manual Svc Order vs. Electronic-Disc 1st | Exhibit: A Incremental Charge - Manual Svc Order vs. Electronic-Disc Add'l |
|---|---|---|---|---|---|---|---|---|---|---|---|---|---|---|---|---|
| | | | | | | Rec | Nonrecurring | | Nonrecurring Disconnect | | OSS Rates ($) | | | | | |
| | | | | | | | First | Add'l | First | Add'l | SOMEC | SOMAN | SOMAN | SOMAN | SOMAN | SOMAN |
| | 4W DS1 Digital Loop/4W DDITS Trunk Port - UNE Zone 2 | | 2 | UEPDC | | 87.61 | | | | | | | | | | |
| | 4W DS1 Digital Loop/4W DDITS Trunk Port - UNE Zone 3 | | 3 | UEPDC | | 103.22 | | | | | | | | | | |
| **UNE Loop Rates** | | | | | | | | | | | | | | | | |
| | 4-Wire DS1 Digital Loop - UNE Zone 1 | | 1 | UEPDC | USLDC | 41.02 | | | | | | | | | | |
| | 4-Wire DS1 Digital Loop - UNE Zone 2 | | 2 | UEPDC | USLDC | 46.41 | | | | | | | | | | |
| | 4-Wire DS1 Digital Loop - UNE Zone 3 | | 3 | UEPDC | USLDC | 62.03 | | | | | | | | | | |
| **UNE Port Rate** | | | | | | | | | | | | | | | | |
| | 4-Wire DDITS Digital Trunk Port (E:4/1/2004) | | | UEPDC | UDD1T | 41.20 | 392.25 | 185.06 | 80.17 | 7.86 | | | | | | |
| **NONRECURRING CHARGES - CURRENTLY COMBINED** | | | | | | | | | | | | | | | | |
| | 4-Wire DS1 Digital Loop / 4-Wire DDITS Trunk Port Combination - Switch-as-Is (E:4/1/2004) | | | UEPDC | USAC4 | | 132.19 | 66.79 | | | | | | | | |
| | 4-Wire DS1 Digital Loop / 4-Wire DDITS Trunk Port Combination - Conversion with DS1 Changes (E:4/1/2004) | | | UEPDC | USAWA | | 132.19 | 66.79 | | | | | | | | |
| | 4-Wire DS1 Digital Loop / 4-Wire DDITS Trunk Port Combination - Conversion with Change - Trunk (E:4/1/2004) | | | UEPDC | USAWB | | 132.19 | 66.79 | | | | | | | | |
| **ADDITIONAL NRCs** | | | | | | | | | | | | | | | | |
| | 4-Wire DS1 Loop / 4-Wire DDITS Trunk Port - Subsequent Service Activity Per Service Order | | | UEPDC | USAS4 | | 0.00 | 0.00 | | | | | | | | |
| | 4-Wire DS1 Loop / 4-Wire DDITS Trunk Port - NRC - Subsequent Channel Activation/Chan - 2-Way Trunk | | | UEPDC | UDTTA | | 13.95 | 13.95 | | | | | | | | |
| | 4-Wire DS1 Loop / 4-Wire DDITS Trunk Port - Subsequent Channel Activation/Chan - 1-Way Outward Trunk | | | UEPDC | UDTTB | | 13.95 | 13.95 | | | | | | | | |
| | 4-Wire DS1 Loop / 4-Wire DDITS Trunk Port - Subsqnt Channel Activation/Chan Inward Trunk w/out DID | | | UEPDC | UDTTC | | 13.95 | 13.95 | | | | | | | | |
| | 4-Wire DS1 Loop / 4-Wire DDITS Trunk Port - Subsqnt Chan Activation Per Chan - Inward Trunk with DID | | | UEPDC | UDTTD | | 13.95 | 13.95 | | | | | | | | |
| | 4-Wire DS1 Loop / 4-Wire DDITS Trunk Port - Subsqnt Chan Activation / Chan - 2-Way DID w User Trans | | | UEPDC | UDTTE | | 13.95 | 13.95 | | | | | | | | |
| **BIPOLAR 8 ZERO SUBSTITUTION** | | | | | | | | | | | | | | | | |
| | B8ZS -Superframe Format | | | UEPDC | CCOSF | | 0.00i | 392.25s | | | | | | | | |
| | B8ZS - Extended Superframe Format | | | UEPDC | CCOEF | | 0.00i | 392.25s | | | | | | | | |
| **Alternate Mark Inversion** | | | | | | | | | | | | | | | | |
| | AMI -Superframe Format | | | UEPDC | MCOSF | | 0.00 | 0.00 | | | | | | | | |
| | AMI - Extended SuperFrame Format | | | UEPDC | MCOPO | | 0.00 | 0.00 | | | | | | | | |
| **Telephone Number/Trunk Group Establisment Charges** | | | | | | | | | | | | | | | | |
| | Telephone Number for 2-Way Trunk Group | | | UEPDC | UDTGX | 0.00 | | | | | | | | | | |
| | Telephone Number for 1-Way Outward Trunk Group | | | UEPDC | UDTGY | 0.00 | | | | | | | | | | |
| | Telephone Number for 1-Way Inward Trunk Group Without DID | | | UEPDC | UDTGZ | 0.00 | | | | | | | | | | |
| | DID Numbers, Establish Trunk Group and Provide First Group of 20 DID Numbers | | | UEPDC | NDZ | 0.00 | 0.00 | 0.00 | | | | | | | | |
| | DID Numbers for each Group of 20 DID Numbers | | | UEPDC | ND4 | 0.00 | | | | | | | | | | |
| | DID Numbers, Non- consecutive DID Numbers , Per Number | | | UEPDC | ND5 | 0.00 | | | | | | | | | | |
| | Reserve Non-Consecutive DID Nos. | | | UEPDC | ND6 | 0.00 | 0.00 | 0.00 | | | | | | | | |
| | Reserve DID Numbers | | | UEPDC | NDV | 0.00 | 0.00 | 0.00 | | | | | | | | |
| **Dedicated DS1 (Interoffice Channel Mileage) - FX/FCO for 4-Wire DS1 Digital Loop with 4-Wire DDITS Trunk Port** | | | | | | | | | | | | | | | | |
| | Interoffice Channel Mileage - Fixed rate 0-8 miles (Facilities Termination) | | | UEPDC | 1LNO1 | 34.19 | 111.03 | 80.28 | 31.36 | 21.73 | | | | | | |
| | Interoffice Channel Mileage - Additional rate per mile - 0-8 miles | | | UEPDC | 1LNOA | 0.1154 | 0.00 | 0.00 | | | | | | | | |
| | Interoffice Channel Mileage - Fixed rate 9-25 miles (Facilities Termination) | | | UEPDC | 1LNO2 | 0.00 | 0.00 | 0.00 | | | | | | | | |
| | Interoffice Channel Mileage - Additional rate per mile - 9-25 miles | | | UEPDC | 1LNOB | 0.1154 | 0.00 | 0.00 | | | | | | | | |
| | Interoffice Channel Mileage - Fixed rate 25+ miles (Facilities Termination) | | | UEPDC | 1LNO3 | 0.00 | 0.00 | 0.00 | | | | | | | | |
| | Interoffice Channel Mileage - Additional rate per mile - 25+ miles | | | UEPDC | 1LNOC | 0.1154 | 0.00 | 0.00 | | | | | | | | |
| | Local Number Portability, per DS0 Activated | | | UEPDC | LNPCP | 3.15 | | | | | | | | | | |
| | Central Office Termininating Point | | | UEPDC | CTG | 0.00 | | | | | | | | | | |

| UNBUNDLED NETWORK ELEMENTS - Georgia | | | | | | | | | | | | | | Attachment: 2 | | Exhibit: A | |
|---|---|---|---|---|---|---|---|---|---|---|---|---|---|---|---|---|---|
| CATEGORY | RATE ELEMENTS | Interim | Zone | BCS | USOC | RATES ($) | | | | | Svc Order Submitted Elec per LSR | Svc Order Submitted Manually per LSR | Incremental Charge - Manual Svc Order vs. Electronic- 1st | Incremental Charge - Manual Svc Order vs. Electronic- Add'l | Incremental Charge - Manual Svc Order vs. Electronic- Disc 1st | Incremental Charge - Manual Svc Order vs. Electronic- Disc Add'l |
| | | | | | | Rec | Nonrecurring | | Nonrecurring Disconnect | | OSS Rates ($) | | | | | |
| | | | | | | | First | Add'l | First | Add'l | SOMEC | SOMAN | SOMAN | SOMAN | SOMAN | SOMAN |
| | 4-WIRE DS1 LOOP WITH CHANNELIZATION WITH PORT | | | | | | | | | | | | | | | |
| | System is 1 DS1 Loop, 1 D4 Channel Bank, and up to 24 Feature Activations | | | | | | | | | | | | | | | |
| | Each System can have up to 24 combinations of rates depending on type and number of ports used | | | | | | | | | | | | | | | |
| | The UNE-P DS1 combination rates below for 4-Wire DS1 Loop with Channelization with Port in this rate exhibit apply to the embedded base in place as of 10/2/03 until 4/1/04. After 4/1/04 these rates shall revert to tariff rates or a separate agreement. | | | | | | | | | | | | | | | |
| | Requests for 4-Wire DS1 Loop with Channelization with Port after the effective date of this amendment shall be provided pursuant to a separate agreement or tariff at BellSouth's discretion. | | | | | | | | | | | | | | | |
| | UNE DS1 Loop | | | | | | | | | | | | | | | |
| | 4-Wire DS1 Loop - UNE Zone 1 | | 1 | UEPMG | USLDC | 41.02 | 0.00 | 0.00 | | | | | | | | |
| | 4-Wire DS1 Loop - UNE Zone 2 | | 2 | UEPMG | USLDC | 46.41 | 0.00 | 0.00 | | | | | | | | |
| | 4-Wire DS1 Loop - UNE Zone 3 | | 3 | UEPMG | USLDC | 62.03 | 0.00 | 0.00 | | | | | | | | |
| | UNE DSO Channelization Capacities (D4 Channel Bank Configurations) | | | | | | | | | | | | | | | |
| | 24 DSO Channel Capacity - 1 per DS1 | | | UEPMG | VUM24 | 43.04 | 0.00 | 0.00 | | | | | | | | |
| | 48 DSO Channel Capacity - 1 per 2 DS1s | | | UEPMG | VUM48 | 86.06 | 0.00 | 0.00 | | | | | | | | |
| | 96 DSO Channel Capacity -1per 4 DS1s | | | UEPMG | VUM96 | 172.16 | 0.00 | 0.00 | | | | | | | | |
| | 144 DS0 Channel Capacity - 1 per 6 DS1s | | | UEPMG | VUM14 | 258.24 | 0.00 | 0.00 | | | | | | | | |
| | 192 DS0 Channel Capacity -1 per 8 DS1s | | | UEPMG | VUM19 | 344.32 | 0.00 | 0.00 | | | | | | | | |
| | 240 DS0 Channel Capacity - 1 per 10 DS1s | | | UEPMG | VUM2O | 430.40 | 0.00 | 0.00 | | | | | | | | |
| | 288 DS0 Channel Capacity - 1 per 12 DS1s | | | UEPMG | VUM28 | 516.48 | 0.00 | 0.00 | | | | | | | | |
| | 384 DS0 Channel Capacity - 1 per 16 DS1s | | | UEPMG | VUM38 | 688.64 | 0.00 | 0.00 | | | | | | | | |
| | 480 DS0 Channel Capacity - 1 per 20 DS1s | | | UEPMG | VUM4O | 860.80 | 0.00 | 0.00 | | | | | | | | |
| | 576 DS0 Channel Capacity -1 per 24 DS1s | | | UEPMG | VUM57 | 1,032.96 | 0.00 | 0.00 | | | | | | | | |
| | 672 DS0 Channel Capacity - 1 per 28 DS1s | | | UEPMG | VUM67 | 1,205.12 | 0.00 | 0.00 | | | | | | | | |
| | Non-Recurring Charges (NRC) Associated with 4-Wire DS1 Loop with Channeliztion with Port - Conversion Charge Based on a System | | | | | | | | | | | | | | | |
| | A Minimum System configuration is One (1) DS1, One (1) D4 Channel Bank, and Up To 24 DSO Ports with Feature Activations. | | | | | | | | | | | | | | | |
| | Multiples of this configuration functioning as one are considered Add'l after the minimum system configuration is counted. | | | | | | | | | | | | | | | |
| | NRC - Conversion (Currently Combined) with or without BellSouth Allowed Changes | | | UEPMG | USAC4 | 0.00 | 153.24 | 8.37 | | | | | | | | |
| | System Additions at End User Locations Where 4-Wire DS1 Loop with Channelization with Port Combination Currently Exists and | | | | | | | | | | | | | | | |
| | New (Not Currently Combined) in all states, except in Density Zone 1 of Top 8 MSA's | | | | | | | | | | | | | | | |
| | 1 DS1/D4 Channel Bank - Additionally Add NRC for each Port and Assoc Fea Activation (E:4/1/2004) | | | UEPMG | VUMD4 | 0.00 | 379.04 | 253.97 | 69.43 | 8.35 | | | | | | |
| | Bipolar 8 Zero Substitution | | | | | | | | | | | | | | | |
| | Clear Channel Capability Format, superframe - Subsequent Activity Only | | | UEPMG | CCOSF | 0.00 | 0.00l | 392.25s | | | | | | | | |
| | Clear Channel Capability Format - Extended Superframe - Subsequent Activity Only | | | UEPMG | CCOEF | 0.00 | 0.00l | 392.25s | | | | | | | | |
| | Alternate Mark Inversion (AMI) | | | | | | | | | | | | | | | |
| | Superframe Format | | | UEPMG | MCOSF | 0.00 | 0.00 | 0.00 | | | | | | | | |
| | Extended Superframe Format | | | UEPMG | MCOPO | 0.00 | 0.00 | 0.00 | | | | | | | | |
| | Exchange Ports Associated with 4-Wire DS1 Loop with Channelization with Port | | | | | | | | | | | | | | | |
| | Exchange Ports | | | | | | | | | | | | | | | |
| | Line Side Combination Channelized PBX Trunk Port - Business (E:4/1/2004) | | | UEPPX | UEPCX | 1.09 | 0.00 | 0.00 | 0.00 | 0.00 | | | | | | |
| | Line Side Outward Channelized PBX Trunk Port - Business (E:4/1/2004) | | | UEPPX | UEPOX | 1.09 | 0.00 | 0.00 | 0.00 | 0.00 | | | | | | |
| | Line Side Inward Only Channelized PBX Trunk Port without DID (E:4/1/2004) | | | UEPPX | UEP1X | 1.09 | 0.00 | 0.00 | 0.00 | 0.00 | | | | | | |
| | 2-Wire Trunk Side Unbundled Channelized DID Trunk Port (E:4/1/2004) | | | UEPPX | UEPDM | 5.50 | 0.00 | 0.00 | 0.00 | 0.00 | | | | | | |
| | Feature Activations - Unbundled Loop Concentration | | | | | | | | | | | | | | | |
| | Feature (Service) Activation for each Line Port Terminated in D4 Bank | | | UEPPX | 1PQWM | 0.4689 | 12.90 | 6.80 | 1.96 | 1.95 | | | | | | |
| | Feature (Service) Activation for each Trunk Port Terminated in D4 Bank | | | UEPPX | 1PQWU | 0.4689 | 38.09 | 9.18 | 26.77 | 5.34 | | | | | | |
| | Telephone Number/ Group Establishment Charges for DID Service | | | | | | | | | | | | | | | |
| | DID Trunk Termination (1 per Port) | | | UEPPX | NDT | 0.00 | 0.00 | 0.00 | | | | | | | | |
| | Estab Trk Grp and Provide 1st 20 DID Nos. (FL,GA, NC,& SC) | | | UEPPX | NDZ | 0.00 | 0.00 | 0.00 | | | | | | | | |
| | DID Numbers - groups of 20 - Valid all States | | | UEPPX | ND4 | 0.00 | 0.00 | 0.00 | | | | | | | | |
| | Non-Consecutive DID Numbers - per number | | | UEPPX | ND5 | 0.00 | 0.00 | 0.00 | | | | | | | | |
| | Reserve Non-Consecutive DID Numbers | | | UEPPX | ND6 | 0.00 | 0.00 | 0.00 | | | | | | | | |

| UNBUNDLED NETWORK ELEMENTS - Georgia | | | | | | | | | | | | | | Attachment: 2 | | Exhibit: A | |
|---|---|---|---|---|---|---|---|---|---|---|---|---|---|---|---|---|---|
| CATEGORY | RATE ELEMENTS | Interim | Zone | BCS | USOC | RATES ($) | | | | | Svc Order Submitted Elec per LSR | Svc Order Submitted Manually per LSR | Incremental Charge - Manual Svc Order vs. Electronic-1st | Incremental Charge - Manual Svc Order vs. Electronic-Add'l | Incremental Charge - Manual Svc Order vs. Electronic-Disc 1st | Incremental Charge - Manual Svc Order vs. Electronic-Disc Add'l |
| | | | | | | Rec | Nonrecurring | | Nonrecurring Disconnect | | OSS Rates ($) | | | | | |
| | | | | | | | First | Add'l | First | Add'l | SOMEC | SOMAN | SOMAN | SOMAN | SOMAN | SOMAN |
| | Reserve DID Numbers | | | UEPPX | NDV | 0.00 | 0.00 | 0.00 | | | | | | | | |
| Local Number Portability | | | | | | | | | | | | | | | | |
| | Local Number Portability - 1 per port | | | UEPPX | LNPCP | 3.15 | 0.00 | 0.00 | | | | | | | | |
| FEATURES - Vertical and Optional | | | | | | | | | | | | | | | | |
| Local Switching Features Offered with Line Side Ports Only | | | | | | | | | | | | | | | | |
| | All Features Available | | | UEPPX | UEPVF | 0.775 | 0.00 | 0.00 | | | | | | | | |
| UNBUNDLED CENTREX PORT/LOOP COMBINATIONS - COST BASED RATES | | | | | | | | | | | | | | | | |
| 1. Cost Based Rates are applied where BellSouth is required by FCC and/or State Commission rule to provide Unbundled Local Switching or Switch Ports. | | | | | | | | | | | | | | | | |
| 2. Features shall apply to the Unbundled Port/Loop Combination - Cost Based Rate section in the same manner as they are applied to the Stand-Alone Unbundled Port section of this Rate Exhibit. | | | | | | | | | | | | | | | | |
| 3. End Office and Tandem Switching Usage and Common Transport Usage rates in the Port section of this rate exhibit shall apply to all combinations of loop/port network elements except for UNE Coin Port/Loop Combinations. | | | | | | | | | | | | | | | | |
| 4. The first and additional Port nonrecurring charges apply to Not Currently Combined Combos. For Currently Combined Combos, the nonrecurring charges shall be those identified in the Nonrecurring - Currently Combined sections. Additional NRCs may apply also and are categorized accordingly. | | | | | | | | | | | | | | | | |
| 5. Market Rates for Unbundled Centrex Port/Loop Combination will be negotiated on an Individual Case Basis, until further notice. | | | | | | | | | | | | | | | | |
| UNE-P CENTREX - 1AESS - (Valid in AL,FL,GA,KY,LA,MS,&TN only) | | | | | | | | | | | | | | | | |
| 2-Wire VG Loop/2-Wire Voice Grade Port (Centrex) Combo | | | | | | | | | | | | | | | | |
| UNE Port/Loop Combination Rates (Non-Design) | | | | | | | | | | | | | | | | |
| | 2-Wire VG Loop/2-Wire Voice Grade Port (Centrex) Port Combo - Non-Design | | 1 | UEP91 | | 10.46 | | | | | | | | | | |
| | 2-Wire VG Loop/2-Wire Voice Grade Port (Centrex)Port Combo - Non-Design | | 2 | UEP91 | | 15.76 | | | | | | | | | | |
| | 2-Wire VG Loop/2-Wire Voice Grade Port (Centrex)Port Combo - Non-Design | | 3 | UEP91 | | 32.56 | | | | | | | | | | |
| UNE Port/Loop Combination Rates (Design) | | | | | | | | | | | | | | | | |
| | 2-Wire VG Loop/2-Wire Voice Grade Port (Centrex) Port Combo - Design | | 1 | UEP91 | | 12.47 | | | | | | | | | | |
| | 2-Wire VG Loop/2-Wire Voice Grade Port (Centrex)Port Combo - Design | | 2 | UEP91 | | 17.85 | | | | | | | | | | |
| | 2-Wire VG Loop/2-Wire Voice Grade Port (Centrex)Port Combo - Design | | 3 | UEP91 | | 33.98 | | | | | | | | | | |
| UNE Loop Rate | | | | | | | | | | | | | | | | |
| | 2-Wire Voice Grade Loop (SL 1) - Zone 1 | | 1 | UEP91 | UECS1 | 9.56 | | | | | | | | | | |
| | 2-Wire Voice Grade Loop (SL 1) - Zone 2 | | 2 | UEP91 | UECS1 | 14.86 | | | | | | | | | | |
| | 2-Wire Voice Grade Loop (SL 1) - Zone 3 | | 3 | UEP91 | UECS1 | 31.66 | | | | | | | | | | |
| | 2-Wire Voice Grade Loop (SL 2) - Zone 1 | | 1 | UEP91 | UECS2 | 11.57 | | | | | | | | | | |
| | 2-Wire Voice Grade Loop (SL 2) - Zone 2 | | 2 | UEP91 | UECS2 | 16.95 | | | | | | | | | | |
| | 2-Wire Voice Grade Loop (SL 2) - Zone 3 | | 3 | UEP91 | UECS2 | 33.08 | | | | | | | | | | |
| UNE Ports | | | | | | | | | | | | | | | | |
| All States (Except North Carolina and Sout Carolina) | | | | | | | | | | | | | | | | |
| | 2-Wire Voice Grade Port (Centrex ) Basic Local Area | | | UEP91 | UEPYA | 0.9019 | 10.05 | 7.36 | 1.37 | 1.28 | | | | | | |
| | 2-Wire Voice Grade Port (Centrex 800 termination)Basic Local Area | | | UEP91 | UEPYB | 0.9019 | 10.05 | 7.36 | 1.37 | 1.28 | | | | | | |
| | 2-Wire Voice Grade Port (Centrex with Caller ID)Note1 Basic Local Area | | | UEP91 | UEPYH | 0.9019 | 10.05 | 7.36 | 1.37 | 1.28 | | | | | | |
| | 2-Wire Voice Grade Port (Centrex from diff Serving Wire Center) Note 2, 3 Basic Local Area | | | UEP91 | UEPYM | 0.9019 | 82.27 | 26.96 | 20.29 | 9.15 | | | | | | |
| | 2-Wire Voice Grade Port, Diff Serving Wire Center - 800 Service Term - Basic Local Area | | | UEP91 | UEPYZ | 0.9019 | 82.27 | 26.96 | 20.29 | 9.15 | | | | | | |
| | 2-Wire Voice Grade Port terminated in on Megalink or equivalent - Basic Local Area | | | UEP91 | UEPY9 | 0.9019 | 10.05 | 7.36 | 1.37 | 1.28 | | | | | | |
| | 2-Wire Voice Grade Port Terminated on 800 Service Term - Basic Local Area | | | UEP91 | UEPY2 | 0.9019 | 10.05 | 7.36 | 1.37 | 1.28 | | | | | | |
| Georgia and Florida Only | | | | | | | | | | | | | | | | |
| | 2-Wire Voice Grade Port (Centrex ) | | | UEP91 | UEPHA | 0.9019 | 10.05 | 7.36 | 1.37 | 1.28 | | | | | | |
| | 2-Wire Voice Grade Port (Centrex 800 termination) | | | UEP91 | UEPHB | 0.9019 | 10.05 | 7.36 | 1.37 | 1.28 | | | | | | |
| | 2-Wire Voice Grade Port (Centrex with Caller ID)1 | | | UEP91 | UEPHH | 0.9019 | 10.05 | 7.36 | 1.37 | 1.28 | | | | | | |
| | 2-Wire Voice Grade Port (Centrex from diff Serving Wire Center)2,3 | | | UEP91 | UEPHM | 0.9019 | 82.27 | 26.96 | 20.29 | 9.15 | | | | | | |
| | 2-Wire Voice Grade Port, Diff Serving Wire Center 2,3 - 800 Service Term | | | UEP91 | UEPHZ | 0.9019 | 82.27 | 26.96 | 20.29 | 9.15 | | | | | | |

## UNBUNDLED NETWORK ELEMENTS - Georgia

| CATEGORY | RATE ELEMENTS | Interim | Zone | BCS | USOC | RATES ($) | | | | | Svc Order Submitted Elec per LSR | Svc Order Submitted Manually per LSR | Attachment: 2 Incremental Charge - Manual Svc Order vs. Electronic-1st | Attachment: 2 Incremental Charge - Manual Svc Order vs. Electronic-Add'l | Exhibit: A Incremental Charge - Manual Svc Order vs. Electronic-Disc 1st | Exhibit: A Incremental Charge - Manual Svc Order vs. Electronic-Disc Add'l |
|---|---|---|---|---|---|---|---|---|---|---|---|---|---|---|---|---|
| | | | | | | Rec | Nonrecurring | | Nonrecurring Disconnect | | OSS Rates ($) | | | | | |
| | | | | | | | First | Add'l | First | Add'l | SOMEC | SOMAN | SOMAN | SOMAN | SOMAN | SOMAN |
| | 2-Wire Voice Grade Port terminated in on Megalink or equivalent | | | UEP91 | UEPH9 | 0.9019 | 10.05 | 7.36 | 1.37 | 1.28 | | | | | | |
| | 2-Wire Voice Grade Port Terminated on 800 Service Term | | | UEP91 | UEPH2 | 0.9019 | 10.05 | 7.36 | 1.37 | 1.28 | | | | | | |
| **Local Switching** | | | | | | | | | | | | | | | | |
| | Centrex Intercom Funtionality, per port | | | UEP91 | URECS | 0.4237 | | | | | | | | | | |
| **Local Number Portability** | | | | | | | | | | | | | | | | |
| | Local Number Portability (1 per port) | | | UEP91 | LNPCC | 0.35 | | | | | | | | | | |
| **Features** | | | | | | | | | | | | | | | | |
| | All Standard Features Offered, per port | | | UEP91 | UEPVF | 0.775 | | | | | | | | | | |
| | All Select Features Offered, per port | | | UEP91 | UEPVS | 0.00 | 0.00 | | | | | | | | | |
| | All Centrex Control Features Offered, per port | | | UEP91 | UEPVC | 0.00 | | | | | | | | | | |
| **NARS** | | | | | | | | | | | | | | | | |
| | Unbundled Network Access Register - Combination | | | UEP91 | UARCX | 0.00 | 0.00 | 0.00 | 0.00 | 0.00 | | | | | | |
| | Unbundled Network Access Register - Indial | | | UEP91 | UAR1X | 0.00 | 0.00 | 0.00 | 0.00 | 0.00 | | | | | | |
| | Unbundled Network Access Register - Outdial | | | UEP91 | UAROX | 0.00 | 0.00 | 0.00 | 0.00 | 0.00 | | | | | | |
| **Miscellaneous Terminations** | | | | | | | | | | | | | | | | |
| **2-Wire Trunk Side** | | | | | | | | | | | | | | | | |
| | Trunk Side Terminations, each | | | UEP91 | CENA6 | 5.50 | 122.26 | 18.65 | 54.82 | 3.45 | | | | | | |
| **Interoffice Channel Mileage - 2-Wire** | | | | | | | | | | | | | | | | |
| | Interoffice Channel Facilities Termination - Voice Grade | | | UEP91 | M1GBC | 12.87 | 48.46 | 19.48 | 16.58 | 5.00 | | | | | | |
| | Interoffice Channel mileage, per mile or fraction of mile | | | UEP91 | M1GBM | 0.0057 | | | | | | | | | | |
| **Feature Activations (DS0) Centrex Loops on Channelized DS1 Service** | | | | | | | | | | | | | | | | |
| **D4 Channel Bank Feature Activations** | | | | | | | | | | | | | | | | |
| | Feature Activation on D-4 Channel Bank Centrex Loop Slot | | | UEP91 | 1PQWS | 0.4689 | | | | | | | | | | |
| | Feature Activation on D-4 Channel Bank FX line Side Loop Slot | | | UEP91 | 1PQW6 | 0.4689 | | | | | | | | | | |
| | Feature Activation on D-4 Channel Bank FX Trunk Side Loop Slot | | | UEP91 | 1PQW7 | 0.4689 | | | | | | | | | | |
| | Feature Activation on D-4 Channel Bank Centrex Loop Slot - Different Wire Center | | | UEP91 | 1PQWP | 0.4689 | | | | | | | | | | |
| | Feature Activation on D-4 Channel Bank Private Line Loop Slot | | | UEP91 | 1PQWV | 0.4689 | | | | | | | | | | |
| | Feature Activation on D-4 Channel Bank Tjie Line/Trunk Loop Slot | | | UEP91 | 1PQWQ | 0.4689 | | | | | | | | | | |
| | Feature Activation on D-4 Channel Bank WATS Loop Slot | | | UEP91 | 1PQWA | 0.4689 | | | | | | | | | | |
| **Non-Recurring Charges (NRC) Associated with UNE-P Centrex** | | | | | | | | | | | | | | | | |
| | Conversion - Currently Combined Switch-As-Is with allowed changes, per port | | | UEP91 | USAC2 | | 0.10 | 0.10 | | | | | | | | |
| | New Centrex Standard Common Block | | | UEP91 | M1ACS | 0.00 | 317.90 | 37.59 | 48.99 | 5.92 | | | | | | |
| | New Centrex Customized Common Block | | | UEP91 | M1ACC | 0.00 | 317.90 | 37.59 | 48.99 | 5.92 | | | | | | |
| | Secondary Block, per Block | | | UEP91 | M2CC1 | 0.00 | 77.10 | | | | | | | | | |
| | NAR Establishment Charge, Per Occasion | | | UEP91 | URECA | 0.00 | 0.00 | | | | | | | | | |
| **Additional Non-Recurring Charges (NRC)** | | | | | | | | | | | | | | | | |
| | Unbundled Miscellaneous Rate Element, Tag Loop at End Use Premise | | | UEP91 | URETL | | 8.33 | 0.83 | | | | | | | | |
| | Unbundled Miscellaneous Rate Element, Tag Design Loop at End Use Premise | | | UEP91 | URETN | | 11.19 | 1.10 | | | | | | | | |
| **UNE-P CENTREX - 5ESS (Valid in All States)** | | | | | | | | | | | | | | | | |
| **2-Wire VG Loop/2-Wire Voice Grade Port (Centrex) Combo** | | | | | | | | | | | | | | | | |
| **UNE Port/Loop Combination Rates (Non-Design)** | | | | | | | | | | | | | | | | |
| | 2-Wire VG Loop/2-Wire Voice Grade Port (Centrex) Port Combo - Non-Design | | 1 | UEP95 | | 10.46 | | | | | | | | | | |
| | 2-Wire VG Loop/2-Wire Voice Grade Port (Centrex)Port Combo - Non-Design | | 2 | UEP95 | | 15.76 | | | | | | | | | | |
| | 2-Wire VG Loop/2-Wire Voice Grade Port (Centrex)Port Combo - Non-Design | | 3 | UEP95 | | 32.56 | | | | | | | | | | |
| **UNE Port/Loop Combination Rates (Design)** | | | | | | | | | | | | | | | | |
| | 2-Wire VG Loop/2-Wire Voice Grade Port (Centrex) Port Combo - Design | | 1 | UEP95 | | 12.47 | | | | | | | | | | |

## UNBUNDLED NETWORK ELEMENTS - Georgia

| CATEGORY | RATE ELEMENTS | Interim | Zone | BCS | USOC | RATES ($) | | | | | Svc Order Submitted Elec per LSR | Svc Order Submitted Manually per LSR | Attachment: 2 | | Exhibit: A | |
|---|---|---|---|---|---|---|---|---|---|---|---|---|---|---|---|---|
| | | | | | | | | | | | | | Incremental Charge - Manual Svc Order vs. Electronic-1st | Incremental Charge - Manual Svc Order vs. Electronic-Add'l | Incremental Charge - Manual Svc Order vs. Electronic-Disc 1st | Incremental Charge - Manual Svc Order vs. Electronic-Disc Add'l |
| | | | | | | Rec | Nonrecurring | | Nonrecurring Disconnect | | OSS Rates ($) | | | | | |
| | | | | | | | First | Add'l | First | Add'l | SOMEC | SOMAN | SOMAN | SOMAN | SOMAN | SOMAN |
| | 2-Wire VG Loop/2-Wire Voice Grade Port (Centrex)Port Combo - Design | | 2 | UEP95 | | 17.85 | | | | | | | | | | |
| | 2-Wire VG Loop/2-Wire Voice Grade Port (Centrex)Port Combo - Design | | 3 | UEP95 | | 33.98 | | | | | | | | | | |
| **UNE Loop Rate** | | | | | | | | | | | | | | | | |
| | 2-Wire Voice Grade Loop (SL 1) - Zone 1 | | 1 | UEP95 | UECS1 | 9.56 | | | | | | | | | | |
| | 2-Wire Voice Grade Loop (SL 1) - Zone 2 | | 2 | UEP95 | UECS1 | 14.86 | | | | | | | | | | |
| | 2-Wire Voice Grade Loop (SL 1) - Zone 3 | | 3 | UEP95 | UECS1 | 31.66 | | | | | | | | | | |
| | 2-Wire Voice Grade Loop (SL 2) - Zone 1 | | 1 | UEP95 | UECS2 | 11.57 | | | | | | | | | | |
| | 2-Wire Voice Grade Loop (SL 2) - Zone 2 | | 2 | UEP95 | UECS2 | 16.95 | | | | | | | | | | |
| | 2-Wire Voice Grade Loop (SL 2) - Zone 3 | | 3 | UEP95 | UECS2 | 33.08 | | | | | | | | | | |
| **UNE Port Rate** | | | | | | | | | | | | | | | | |
| **All States** | | | | | | | | | | | | | | | | |
| | 2-Wire Voice Grade Port (Centrex ) Basic Local Area | | | UEP95 | UEPYA | 0.9019 | 10.05 | 7.36 | 1.37 | 1.28 | | | | | | |
| | 2-Wire Voice Grade Port (Centrex 800 termination) | | | UEP95 | UEPYB | 0.9019 | 10.05 | 7.36 | 1.37 | 1.28 | | | | | | |
| | 2-Wire Voice Grade Port (Centrex with Caller ID)1Basic Local Area | | | UEP95 | UEPYH | 0.9019 | 10.05 | 7.36 | 1.37 | 1.28 | | | | | | |
| | 2-Wire Voice Grade Port (Centrex from diff Serving Wire Center)2,3 Basic Local Area | | | UEP95 | UEPYM | 0.9019 | 82.27 | 26.96 | 20.29 | 9.15 | | | | | | |
| | 2-Wire Voice Grade Port, Diff Serving Wire Center 2,3 - 800 Service Term - Basic Local Area | | | UEP95 | UEPYZ | 0.9019 | 82.27 | 26.96 | 20.29 | 9.15 | | | | | | |
| | 2-Wire Voice Grade Port terminated in on Megalink or equivalent - Basic Local Area | | | UEP95 | UEPY9 | 0.9019 | 10.05 | 7.36 | 1.37 | 1.28 | | | | | | |
| | 2-Wire Voice Grade Port Terminated on 800 Service Term - Basic Local Area | | | UEP95 | UEPY2 | 0.9019 | 10.05 | 7.36 | 1.37 | 1.28 | | | | | | |
| **FL & GA Only** | | | | | | | | | | | | | | | | |
| | 2-Wire Voice Grade Port (Centrex ) | | | UEP95 | UEPHA | 0.9019 | 10.05 | 7.36 | 1.37 | 1.28 | | | | | | |
| | 2-Wire Voice Grade Port (Centrex 800 termination) | | | UEP95 | UEPHB | 0.9019 | 10.05 | 7.36 | 1.37 | 1.28 | | | | | | |
| | 2-Wire Voice Grade Port (Centrex with Caller ID)1 | | | UEP95 | UEPHH | 0.9019 | 10.05 | 7.36 | 1.37 | 1.28 | | | | | | |
| | 2-Wire Voice Grade Port (Centrex from diff Serving Wire Center)2,3 | | | UEP95 | UEPHM | 0.9019 | 82.27 | 26.96 | 20.29 | 9.15 | | | | | | |
| | 2-Wire Voice Grade Port, Diff Serving Wire Center - 800 Service Term 2,3 | | | UEP95 | UEPHZ | 0.9019 | 82.27 | 26.96 | 20.29 | 9.15 | | | | | | |
| | 2-Wire Voice Grade Port terminated in on Megalink or equivalent | | | UEP95 | UEPH9 | 0.9019 | 10.05 | 7.36 | 1.37 | 1.28 | | | | | | |
| | 2-Wire Voice Grade Port Terminated on 800 Service Term | | | UEP95 | UEPH2 | 0.9019 | 10.05 | 7.36 | 1.37 | 1.28 | | | | | | |
| **Local Switching** | | | | | | | | | | | | | | | | |
| | Centrex Intercom Funtionality, per port | | | UEP95 | URECS | 0.4237 | | | | | | | | | | |
| **Local Number Portability** | | | | | | | | | | | | | | | | |
| | Local Number Portability (1 per port) | | | UEP95 | LNPCC | 0.35 | | | | | | | | | | |
| **Features** | | | | | | | | | | | | | | | | |
| | All Standard Features Offered, per port | | | UEP95 | UEPVF | 0.775 | | | | | | | | | | |
| | All Select Features Offered, per port | | | UEP95 | UEPVS | 0.00 | 0.00 | | | | | | | | | |
| | All Centrex Control Features Offered, per port | | | UEP95 | UEPVC | 0.00 | | | | | | | | | | |
| **NARS** | | | | | | | | | | | | | | | | |
| | Unbundled Network Access Register - Combination | | | UEP95 | UARCX | 0.00 | 0.00 | 0.00 | 0.00 | 0.00 | | | | | | |
| | Unbundled Network Access Register - Indial | | | UEP95 | UAR1X | 0.00 | 0.00 | 0.00 | 0.00 | 0.00 | | | | | | |
| | Unbundled Network Access Register - Outdial | | | UEP95 | UAROX | 0.00 | 0.00 | 0.00 | 0.00 | 0.00 | | | | | | |
| **Miscellaneous Terminations** | | | | | | | | | | | | | | | | |
| **2-Wire Trunk Side** | | | | | | | | | | | | | | | | |
| | Trunk Side Terminations, each | | | UEP95 | CEND6 | 5.50 | 122.26 | 18.65 | 54.82 | 3.45 | | | | | | |
| **4-Wire Digital (1.544 Megabits)** | | | | | | | | | | | | | | | | |
| | DS1 Circuit Terminations, each | | | UEP95 | M1HD1 | 41.20 | 200.96 | 93.00 | 65.81 | 2.33 | | | | | | |
| | DS0 Channels Activated, each | | | UEP95 | M1HDO | 0.00 | 13.95 | | | | | | | | | |
| **Interoffice Channel Mileage - 2-Wire** | | | | | | | | | | | | | | | | |
| | Interoffice Channel Facilities Termination | | | UEP95 | M1GBC | 12.87 | 48.46 | 19.48 | 16.58 | 5.00 | | | | | | |
| | Interoffice Channel mileage, per mile or fraction of mile | | | UEP95 | M1GBM | 0.0057 | | | | | | | | | | |
| **Feature Activations (DS0) Centrex Loops on Channelized DS1 Service** | | | | | | | | | | | | | | | | |
| **D4 Channel Bank Feature Activations** | | | | | | | | | | | | | | | | |

| UNBUNDLED NETWORK ELEMENTS - Georgia | | | | | | | | | | | | | Attachment: 2 | | Exhibit: A | |
|---|---|---|---|---|---|---|---|---|---|---|---|---|---|---|---|---|
| CATEGORY | | RATE ELEMENTS | Interim | Zone | BCS | USOC | RATES ($) | | | | | Svc Order Submitted Elec per LSR | Svc Order Submitted Manually per LSR | Incremental Charge - Manual Svc Order vs. Electronic-1st | Incremental Charge - Manual Svc Order vs. Electronic-Add'l | Incremental Charge - Manual Svc Order vs. Electronic-Disc 1st | Incremental Charge - Manual Svc Order vs. Electronic-Disc Add'l |
| | | | | | | | Rec | Nonrecurring | | Nonrecurring Disconnect | | OSS Rates ($) | | | | | |
| | | | | | | | | First | Add'l | First | Add'l | SOMEC | SOMAN | SOMAN | SOMAN | SOMAN | SOMAN |
| | | Feature Activation on D-4 Channel Bank Centrex Loop Slot | | | UEP95 | 1PQWS | 0.4689 | | | | | | | | | | |
| | | Feature Activation on D-4 Channel Bank FX line Side Loop Slot | | | UEP95 | 1PQW6 | 0.4689 | | | | | | | | | | |
| | | Feature Activation on D-4 Channel Bank FX Trunk Side Loop Slot | | | UEP95 | 1PQW7 | 0.4689 | | | | | | | | | | |
| | | Feature Activation on D-4 Channel Bank Centrex Loop Slot - Different Wire Center | | | UEP95 | 1PQWP | 0.4689 | | | | | | | | | | |
| | | Feature Activation on D-4 Channel Bank Private Line Loop Slot | | | UEP95 | 1PQWV | 0.4689 | | | | | | | | | | |
| | | Feature Activation on D-4 Channel Bank Tjie Line/Trunk Loop Slot | | | UEP95 | 1PQWQ | 0.4689 | | | | | | | | | | |
| | | Feature Activation on D-4 Channel Bank WATS Loop Slot | | | UEP95 | 1PQWA | 0.4689 | | | | | | | | | | |
| | **Non-Recurring Charges (NRC) Associated with UNE-P Centrex** | | | | | | | | | | | | | | | | |
| | | NRC Conversion Currently Combined Switch-As-Is with allowed changes, per port | | | UEP95 | USAC2 | | 0.10 | 0.10 | | | | | | | | |
| | | New Centrex Standard Common Block | | | UEP95 | M1ACS | 0.00 | 317.90 | 37.59 | 48.99 | 5.92 | | | | | | |
| | | New Centrex Customized Common Block | | | UEP95 | M1ACC | 0.00 | 317.90 | 37.59 | 48.99 | 5.92 | | | | | | |
| | | NAR Establishment Charge, Per Occasion | | | UEP95 | URECA | 0.00 | 0.00 | | | | | | | | | |
| | **Additional Non-Recurring Charges (NRC)** | | | | | | | | | | | | | | | | |
| | | Unbundled Miscellaneous Rate Element, Tag Loop at End Use Premise | | | UEP95 | URETL | | 8.33 | 0.83 | | | | | | | | |
| | | Unbundled Miscellaneous Rate Element, Tag Design Loop at End Use Premise | | | UEP95 | URETN | | 11.19 | 1.10 | | | | | | | | |
| | **UNE-P CENTREX - DMS100 (Valid in All States)** | | | | | | | | | | | | | | | | |
| | **2-Wire VG Loop/2-Wire Voice Grade Port (Centrex) Combo** | | | | | | | | | | | | | | | | |
| | **UNE Port/Loop Combination Rates (Non-Design)** | | | | | | | | | | | | | | | | |
| | | 2-Wire VG Loop/2-Wire Voice Grade Port (Centrex) Port Combo - Non-Design | | 1 | UEP9D | | 10.46 | | | | | | | | | | |
| | | 2-Wire VG Loop/2-Wire Voice Grade Port (Centrex)Port Combo - Non-Design | | 2 | UEP9D | | 15.76 | | | | | | | | | | |
| | | 2-Wire VG Loop/2-Wire Voice Grade Port (Centrex)Port Combo - Non-Design | | 3 | UEP9D | | 32.56 | | | | | | | | | | |
| | **UNE Port/Loop Combination Rates (Design)** | | | | | | | | | | | | | | | | |
| | | 2-Wire VG Loop/2-Wire Voice Grade Port (Centrex) Port Combo - Design | | 1 | UEP9D | | 12.47 | | | | | | | | | | |
| | | 2-Wire VG Loop/2-Wire Voice Grade Port (Centrex)Port Combo - Design | | 2 | UEP9D | | 17.85 | | | | | | | | | | |
| | | 2-Wire VG Loop/2-Wire Voice Grade Port (Centrex)Port Combo - Design | | 3 | UEP9D | | 33.98 | | | | | | | | | | |
| | **UNE Loop Rate** | | | | | | | | | | | | | | | | |
| | | 2-Wire Voice Grade Loop (SL 1) - Zone 1 | | 1 | UEP9D | UECS1 | 9.56 | | | | | | | | | | |
| | | 2-Wire Voice Grade Loop (SL 1) - Zone 2 | | 2 | UEP9D | UECS1 | 14.86 | | | | | | | | | | |
| | | 2-Wire Voice Grade Loop (SL 1) - Zone 3 | | 3 | UEP9D | UECS1 | 31.66 | | | | | | | | | | |
| | | 2-Wire Voice Grade Loop (SL 2) - Zone 1 | | 1 | UEP9D | UECS2 | 11.57 | | | | | | | | | | |
| | | 2-Wire Voice Grade Loop (SL 2) - Zone 2 | | 2 | UEP9D | UECS2 | 16.95 | | | | | | | | | | |
| | | 2-Wire Voice Grade Loop (SL 2) - Zone 3 | | 3 | UEP9D | UECS2 | 33.08 | | | | | | | | | | |
| | **UNE Port Rate** | | | | | | | | | | | | | | | | |
| | **ALL STATES** | | | | | | | | | | | | | | | | |
| | | 2-Wire Voice Grade Port (Centrex ) Basic Local Area | | | UEP9D | UEPYA | 0.9019 | 10.05 | 7.36 | 1.37 | 1.28 | | | | | | |
| | | 2-Wire Voice Grade Port (Centrex 800 termination)Basic Local Area | | | UEP9D | UEPYB | 0.9019 | 10.05 | 7.36 | 1.37 | 1.28 | | | | | | |
| | | 2-Wire Voice Grade Port (Centrex / EBS-PSET)3Basic Local Area | | | UEP9D | UEPYC | 0.9019 | 10.05 | 7.36 | 1.37 | 1.28 | | | | | | |
| | | 2-Wire Voice Grade Port (Centrex / EBS-M5009)3Basic Local Area | | | UEP9D | UEPYD | 0.9019 | 10.05 | 7.36 | 1.37 | 1.28 | | | | | | |
| | | 2-Wire Voice Grade Port (Centrex / EBS-M5209))3 Basic Local Area | | | UEP9D | UEPYE | 0.9019 | 10.05 | 7.36 | 1.37 | 1.28 | | | | | | |
| | | 2-Wire Voice Grade Port (Centrex / EBS-M5112))3 Basic Local Area | | | UEP9D | UEPYF | 0.9019 | 10.05 | 7.36 | 1.37 | 1.28 | | | | | | |

| UNBUNDLED NETWORK ELEMENTS - Georgia | | | | | | | | | | | | | | Attachment: 2 | | Exhibit: A | |
|---|---|---|---|---|---|---|---|---|---|---|---|---|---|---|---|---|---|
| CATEGORY | | RATE ELEMENTS | Interim | Zone | BCS | USOC | RATES ($) | | | | | Svc Order Submitted Elec per LSR | Svc Order Submitted Manually per LSR | Incremental Charge - Manual Svc Order vs. Electronic-1st | Incremental Charge - Manual Svc Order vs. Electronic-Add'l | Incremental Charge - Manual Svc Order vs. Electronic-Disc 1st | Incremental Charge - Manual Svc Order vs. Electronic-Disc Add'l |
| | | | | | | | Rec | Nonrecurring | | Nonrecurring Disconnect | | OSS Rates ($) | | | | | |
| | | | | | | | | First | Add'l | First | Add'l | SOMEC | SOMAN | SOMAN | SOMAN | SOMAN | SOMAN |
| | | 2-Wire Voice Grade Port (Centrex / EBS-M5312))3Basic Local Area | | | UEP9D | UEPYG | 0.9019 | 10.05 | 7.36 | 1.37 | 1.28 | | | | | | |
| | | 2-Wire Voice Grade Port (Centrex / EBS-M5008))3 Basic Local Area | | | UEP9D | UEPYT | 0.9019 | 10.05 | 7.36 | 1.37 | 1.28 | | | | | | |
| | | 2-Wire Voice Grade Port (Centrex / EBS-M5208))3 Basic Local Area | | | UEP9D | UEPYU | 0.9019 | 10.05 | 7.36 | 1.37 | 1.28 | | | | | | |
| | | 2-Wire Voice Grade Port (Centrex / EBS-M5216))3 Basic Local Area | | | UEP9D | UEPYV | 0.9019 | 10.05 | 7.36 | 1.37 | 1.28 | | | | | | |
| | | 2-Wire Voice Grade Port (Centrex / EBS-M5316))3 Basic Local Area | | | UEP9D | UEPY3 | 0.9019 | 10.05 | 7.36 | 1.37 | 1.28 | | | | | | |
| | | 2-Wire Voice Grade Port (Centrex with Caller ID) Basic Local Area | | | UEP9D | UEPYH | 0.9019 | 10.05 | 7.36 | 1.37 | 1.28 | | | | | | |
| | | 2-Wire Voice Grade Port (Centrex/Caller ID/Msg Wtg Lamp Indication))4 Basic Local Area | | | UEP9D | UEPYW | 0.9019 | 10.05 | 7.36 | 1.37 | 1.28 | | | | | | |
| | | 2-Wire Voice Grade Port (Centrex/Msg Wtg Lamp Indication))4 Basic Local Area | | | UEP9D | UEPYJ | 0.9019 | 10.05 | 7.36 | 1.37 | 1.28 | | | | | | |
| | | 2-Wire Voice Grade Port (Centrex from diff Serving Wire Center) 2,3-Basic Local Area | | | UEP9D | UEPYM | 0.9019 | 82.27 | 26.96 | 20.29 | 9.15 | | | | | | |
| | | 2-Wire Voice Grade Port (Centrex/differ SWC /EBS-PSET)2,3,4 Basic Local Area | | | UEP9D | UEPYO | 0.9019 | 82.27 | 26.96 | 20.29 | 9.15 | | | | | | |
| | | 2-Wire Voice Grade Port (Centrex/differ SWC /EBS-M5009)2,3,4 Basic Local Area | | | UEP9D | UEPYP | 0.9019 | 82.27 | 26.96 | 20.29 | 9.15 | | | | | | |
| | | 2-Wire Voice Grade Port (Centrex/differ SWC /EBS-5209)2,3,4 Basic Local Area | | | UEP9D | UEPYQ | 0.9019 | 82.27 | 26.96 | 20.29 | 9.15 | | | | | | |
| | | 2-Wire Voice Grade Port (Centrex/differ SWC /EBS-M5112)2,3,4 Basic Local Area | | | UEP9D | UEPYR | 0.9019 | 82.27 | 26.96 | 20.29 | 9.15 | | | | | | |
| | | 2-Wire Voice Grade Port (Centrex/differ SWC /EBS-M5312)2,3,4 Basic Local Area | | | UEP9D | UEPYS | 0.9019 | 82.27 | 26.96 | 20.29 | 9.15 | | | | | | |
| | | 2-Wire Voice Grade Port (Centrex/differ SWC /EBS-M5008)2,3,4 Basic Local Area | | | UEP9D | UEPY4 | 0.9019 | 82.27 | 26.96 | 20.29 | 9.15 | | | | | | |
| | | 2-Wire Voice Grade Port (Centrex/differ SWC /EBS-M5208)2, 3 Basic Local Area | | | UEP9D | UEPY5 | 0.9019 | 82.27 | 26.96 | 20.29 | 9.15 | | | | | | |
| | | 2-Wire Voice Grade Port (Centrex/differ SWC /EBS-M5216)2,3,4 Basic Local Area | | | UEP9D | UEPY6 | 0.9019 | 82.27 | 26.96 | 20.29 | 9.15 | | | | | | |
| | | 2-Wire Voice Grade Port (Centrex/differ SWC /EBS-M5316)2,3,4 Basic Local Area | | | UEP9D | UEPY7 | 0.9019 | 82.27 | 26.96 | 20.29 | 9.15 | | | | | | |
| | | 2-Wire Voice Grade Port, Diff Serving Wire Center - 800 Service Term 2,3 | | | UEP9D | UEPYZ | 0.9019 | 82.27 | 26.96 | 20.29 | 9.15 | | | | | | |
| | | 2-Wire Voice Grade Port terminated in on Megalink or equivalent Basic Local Area | | | UEP9D | UEPY9 | 0.9019 | 10.05 | 7.36 | 1.37 | 1.28 | | | | | | |
| | | 2-Wire Voice Grade Port Terminated on 800 Service Term Basic Local Area | | | UEP9D | UEPY2 | 0.9019 | 10.05 | 7.36 | 1.37 | 1.28 | | | | | | |
| | FL & GA Only | | | | | | | | | | | | | | | | |
| | | 2-Wire Voice Grade Port (Centrex) | | | UEP9D | UEPHA | 0.9019 | 10.05 | 7.36 | 1.37 | 1.28 | | | | | | |
| | | 2-Wire Voice Grade Port (Centrex 800 termination) | | | UEP9D | UEPHB | 0.9019 | 10.05 | 7.36 | 1.37 | 1.28 | | | | | | |
| | | 2-Wire Voice Grade Port (Centrex / EBS-PSET)4 | | | UEP9D | UEPHC | 0.9019 | 10.05 | 7.36 | 1.37 | 1.28 | | | | | | |
| | | 2-Wire Voice Grade Port (Centrex / EBS-M5009)4 | | | UEP9D | UEPHD | 0.9019 | 10.05 | 7.36 | 1.37 | 1.28 | | | | | | |
| | | 2-Wire Voice Grade Port (Centrex / EBS-M5209)4 | | | UEP9D | UEPHE | 0.9019 | 10.05 | 7.36 | 1.37 | 1.28 | | | | | | |
| | | 2-Wire Voice Grade Port (Centrex / EBS-M5112)4 | | | UEP9D | UEPHF | 0.9019 | 10.05 | 7.36 | 1.37 | 1.28 | | | | | | |
| | | 2-Wire Voice Grade Port (Centrex / EBS-M5312)4 | | | UEP9D | UEPHG | 0.9019 | 10.05 | 7.36 | 1.37 | 1.28 | | | | | | |
| | | 2-Wire Voice Grade Port (Centrex / EBS-M5008)4 | | | UEP9D | UEPHT | 0.9019 | 10.05 | 7.36 | 1.37 | 1.28 | | | | | | |
| | | 2-Wire Voice Grade Port (Centrex / EBS-M5208)4 | | | UEP9D | UEPHU | 0.9019 | 10.05 | 7.36 | 1.37 | 1.28 | | | | | | |
| | | 2-Wire Voice Grade Port (Centrex / EBS-M5216)4 | | | UEP9D | UEPHV | 0.9019 | 10.05 | 7.36 | 1.37 | 1.28 | | | | | | |
| | | 2-Wire Voice Grade Port (Centrex / EBS-M5316)4 | | | UEP9D | UEPH3 | 0.9019 | 10.05 | 7.36 | 1.37 | 1.28 | | | | | | |
| | | 2-Wire Voice Grade Port (Centrex with Caller ID) | | | UEP9D | UEPHH | 0.9019 | 10.05 | 7.36 | 1.37 | 1.28 | | | | | | |
| | | 2-Wire Voice Grade Port (Centrex/Caller ID/Msg Wtg Lamp Indication)4 | | | UEP9D | UEPHW | 0.9019 | 10.05 | 7.36 | 1.37 | 1.28 | | | | | | |
| | | 2-Wire Voice Grade Port (Centrex/Msg Wtg Lamp Indication)4 | | | UEP9D | UEPHJ | 0.9019 | 10.05 | 7.36 | 1.37 | 1.28 | | | | | | |

## UNBUNDLED NETWORK ELEMENTS - Georgia

| CATEGORY | RATE ELEMENTS | Interl m | Zone | BCS | USOC | RATES ($) | | | | | Svc Order Submitted Elec per LSR | Svc Order Submitted Manually per LSR | Attachment: 2 | | Exhibit: A | |
|---|---|---|---|---|---|---|---|---|---|---|---|---|---|---|---|---|
| | | | | | | | | | | | | | Incremental Charge - Manual Svc Order vs. Electronic- 1st | Incremental Charge - Manual Svc Order vs. Electronic- Add'l | Incremental Charge - Manual Svc Order vs. Electronic- Disc 1st | Incremental Charge - Manual Svc Order vs. Electronic- Disc Add'l |
| | | | | | | Rec | Nonrecurring | | Nonrecurring Disconnect | | OSS Rates ($) | | | | | |
| | | | | | | | First | Add'l | First | Add'l | SOMEC | SOMAN | SOMAN | SOMAN | SOMAN | SOMAN |
| | 2-Wire Voice Grade Port (Centrex from diff Serving Wire Center) 2,3 | | | UEP9D | UEPHM | 0.9019 | 82.27 | 26.96 | 20.29 | 9.15 | | | | | | |
| | 2-Wire Voice Grade Port (Centrex/differ SWC /EBS-PSET)2,3,4 | | | UEP9D | UEPHO | 0.9019 | 82.27 | 26.96 | 20.29 | 9.15 | | | | | | |
| | 2-Wire Voice Grade Port (Centrex/differ SWC /EBS-M5009)2,3,4 | | | UEP9D | UEPHP | 0.9019 | 82.27 | 26.96 | 20.29 | 9.15 | | | | | | |
| | 2-Wire Voice Grade Port (Centrex/differ SWC /EBS-5209)2,3,4 | | | UEP9D | UEPHQ | 0.9019 | 82.27 | 26.96 | 20.29 | 9.15 | | | | | | |
| | 2-Wire Voice Grade Port (Centrex/differ SWC /EBS-M5112)2,3,4 | | | UEP9D | UEPHR | 0.9019 | 82.27 | 26.96 | 20.29 | 9.15 | | | | | | |
| | 2-Wire Voice Grade Port (Centrex/differ SWC /EBS-M5312)2, 3,4 | | | UEP9D | UEPHS | 0.9019 | 82.27 | 26.96 | 20.29 | 9.15 | | | | | | |
| | 2-Wire Voice Grade Port (Centrex/differ SWC /EBS-M5008)2,3,4 | | | UEP9D | UEPH4 | 0.9019 | 82.27 | 26.96 | 20.29 | 9.15 | | | | | | |
| | 2-Wire Voice Grade Port (Centrex/differ SWC /EBS-M5208)2,3,4 | | | UEP9D | UEPH5 | 0.9019 | 82.27 | 26.96 | 20.29 | 9.15 | | | | | | |
| | 2-Wire Voice Grade Port (Centrex/differ SWC /EBS-M5216)2,3,4 | | | UEP9D | UEPH6 | 0.9019 | 82.27 | 26.96 | 20.29 | 9.15 | | | | | | |
| | 2-Wire Voice Grade Port (Centrex/differ SWC /EBS-M5316)2,3,4 | | | UEP9D | UEPH7 | 0.9019 | 82.27 | 26.96 | 20.29 | 9.15 | | | | | | |
| | 2-Wire Voice Grade Port, Diff Serving Wire Center - 800 Service Term 2,3 | | | UEP9D | UEPHZ | 0.9019 | 82.27 | 26.96 | 20.29 | 9.15 | | | | | | |
| | 2-Wire Voice Grade Port terminated in on Megalink or equivalent | | | UEP9D | UEPH9 | 0.9019 | 10.05 | 7.36 | 1.37 | 1.28 | | | | | | |
| | 2-Wire Voice Grade Port Terminated on 800 Service Term | | | UEP9D | UEPH2 | 0.9019 | 10.05 | 7.36 | 1.37 | 1.28 | | | | | | |
| **Local Switching** | | | | | | | | | | | | | | | | |
| | Centrex Intercom Funtionality, per port | | | UEP9D | URECS | 0.4237 | | | | | | | | | | |
| **Local Number Portability** | | | | | | | | | | | | | | | | |
| | Local Number Portability (1 per port) | | | UEP9D | LNPCC | 0.35 | | | | | | | | | | |
| **Features** | | | | | | | | | | | | | | | | |
| | All Standard Features Offered, per port | | | UEP9D | UEPVF | 0.775 | | | | | | | | | | |
| | All Select Features Offered, per port | | | UEP9D | UEPVS | 0.00 | 0.00 | | | | | | | | | |
| | All Centrex Control Features Offered, per port | | | UEP9D | UEPVC | 0.00 | | | | | | | | | | |
| **NARS** | | | | | | | | | | | | | | | | |
| | Unbundled Network Access Register - Combination | | | UEP9D | UARCX | 0.00 | 0.00 | 0.00 | 0.00 | 0.00 | | | | | | |
| | Unbundled Network Access Register - Inward | | | UEP9D | UAR1X | 0.00 | 0.00 | 0.00 | 0.00 | 0.00 | | | | | | |
| | Unbundled Network Access Register - Outdial | | | UEP9D | UAROX | 0.00 | 0.00 | 0.00 | 0.00 | 0.00 | | | | | | |
| **Miscellaneous Terminations** | | | | | | | | | | | | | | | | |
| **2-Wire Trunk Side** | | | | | | | | | | | | | | | | |
| | Trunk Side Terminations, each | | | UEP9D | CEND6 | 5.50 | 122.26 | 18.65 | 54.82 | 3.45 | | | | | | |
| **4-Wire Digital (1.544 Megabits)** | | | | | | | | | | | | | | | | |
| | DS1 Circuit Terminations, each | | | UEP9D | M1HD1 | 41.20 | 200.96 | 93.00 | 65.81 | 2.33 | | | | | | |
| | DS0 Channels Activiated per Channel | | | UEP9D | M1HDO | 0.00 | 13.95 | | | | | | | | | |
| **Interoffice Channel Mileage - 2-Wire** | | | | | | | | | | | | | | | | |
| | Interoffice Channel Facilities Termination | | | UEP9D | M1GBC | 12.87 | 48.46 | 19.48 | 16.58 | 5.00 | | | | | | |
| | Interoffice Channel mileage, per mile or fraction of mile | | | UEP9D | M1GBM | 0.0057 | | | | | | | | | | |
| **Feature Activations (DS0) Centrex Loops on Channelized DS1 Service** | | | | | | | | | | | | | | | | |
| **D4 Channel Bank Feature Activations** | | | | | | | | | | | | | | | | |
| | Feature Activation on D-4 Channel Bank Centrex Loop Slot | | | UEP9D | 1PQWS | 0.4689 | | | | | | | | | | |
| | Feature Activation on D-4 Channel Bank FX line Side Loop Slot | | | UEP9D | 1PQW6 | 0.4689 | | | | | | | | | | |
| | Feature Activation on D-4 Channel Bank FX Trunk Side Loop Slot | | | UEP9D | 1PQW7 | 0.4689 | | | | | | | | | | |
| | Feature Activation on D-4 Channel Bank Centrex Loop Slot - Different Wire Center | | | UEP9D | 1PQWP | 0.4689 | | | | | | | | | | |
| | Feature Activation on D-4 Channel Bank Private Line Loop Slot | | | UEP9D | 1PQWV | 0.4689 | | | | | | | | | | |
| | Feature Activation on D-4 Channel Bank Tjie Line/Trunk Loop Slot | | | UEP9D | 1PQWQ | 0.4689 | | | | | | | | | | |

| UNBUNDLED NETWORK ELEMENTS - Georgia | | | | | | | | | | | | | | Attachment: 2 | | Exhibit: A | |
|---|---|---|---|---|---|---|---|---|---|---|---|---|---|---|---|---|---|
| CATEGORY | RATE ELEMENTS | Interim | Zone | BCS | USOC | RATES ($) | | | | | Svc Order Submitted Elec per LSR | Svc Order Submitted Manually per LSR | Incremental Charge - Manual Svc Order vs. Electronic-1st | Incremental Charge - Manual Svc Order vs. Electronic-Add'l | Incremental Charge - Manual Svc Order vs. Electronic-Disc 1st | Incremental Charge - Manual Svc Order vs. Electronic-Disc Add'l |
| | | | | | | Rec | Nonrecurring | | Nonrecurring Disconnect | | OSS Rates ($) | | | | | |
| | | | | | | | First | Add'l | First | Add'l | SOMEC | SOMAN | SOMAN | SOMAN | SOMAN | SOMAN |
| | Feature Activation on D-4 Channel Bank WATS Loop Slot | | | UEP9D | 1PQWA | 0.4689 | | | | | | | | | | |
| **Non-Recurring Charges (NRC) Associated with UNE-P Centrex** | | | | | | | | | | | | | | | | |
| | NRC Conversion Currently Combined Switch-As-Is with allowed changes, per port | | | UEP9D | USAC2 | | 0.10 | 0.10 | | | | | | | | |
| | New Centrex Standard Common Block | | | UEP9D | M1ACS | 0.00 | 317.90 | 37.59 | 48.99 | 5.92 | | | | | | |
| | New Centrex Customized Common Block | | | UEP9D | M1ACC | 0.00 | 317.90 | 37.59 | 48.99 | 5.92 | | | | | | |
| | NAR Establishment Charge, Per Occasion | | | UEP9D | URECA | 0.00 | 0.00 | | | | | | | | | |
| **Additional Non-Recurring Charges (NRC)** | | | | | | | | | | | | | | | | |
| | Unbundled Miscellaneous Rate Element, Tag Loop at End Use Premise | | | UEP9D | URETL | | 8.33 | 0.83 | | | | | | | | |
| | Unbundled Miscellaneous Rate Element, Tag Design Loop at End Use Premise | | | UEP9D | URETN | | 11.19 | 1.10 | | | | | | | | |
| **Additional Non-Recurring Charges (NRC)** | | | | | | | | | | | | | | | | |
| | Unbundled Miscellaneous Rate Element, Tag Loop at End Use Premise | | | UEP9E | URETL | | | | | | | | | | | |
| | Unbundled Miscellaneous Rate Element, Tag Design Loop at End Use Premise | | | UEP9E | URETN | | | | | | | | | | | |
| **Note 1 - Required Port for Centrex Control in 1AESS, 5ESS & EWSD** | | | | | | | | | | | | | | | | |
| **Note 2 - Requres Interoffice Channel Mileage** | | | | | | | | | | | | | | | | |
| **Note 3 - Installation is combination of Installation charge for SL2 Loop and Port** | | | | | | | | | | | | | | | | |
| **Note 4 - Requires Specific Customer Premises Equipment** | | | | | | | | | | | | | | | | |
| **Note: Rates displaying an "R" in Interim column are interim and subject to rate true-up as set forth in General Terms and Conditions.** | | | | | | | | | | | | | | | | |

## UNBUNDLED NETWORK ELEMENTS - Kentucky

Attachment: 2 | Exhibit: A

| CATEGORY | RATE ELEMENTS | Interim | Zone | BCS | USOC | RATES ($) | | | | | Svc Order Submitted Elec per LSR | Svc Order Submitted Manually per LSR | Incremental Charge - Manual Svc Order vs. Electronic-1st | Incremental Charge - Manual Svc Order vs. Electronic-Add'l | Incremental Charge - Manual Svc Order vs. Electronic-Disc 1st | Incremental Charge - Manual Svc Order vs. Electronic-Disc Add'l |
|---|---|---|---|---|---|---|---|---|---|---|---|---|---|---|---|---|
| | | | | | | Rec | Nonrecurring | | Nonrecurring Disconnect | | OSS Rates ($) | | | | | |
| | | | | | | | First | Add'l | First | Add'l | SOMEC | SOMAN | SOMAN | SOMAN | SOMAN | SOMAN |
| | The "Zone" shown in the sections for stand-alone loops or loops as part of a combination refers to Geographically Deaveraged UNE Zones. To view Geographically Deaveraged UNE Zone Designations by Central Office, refer to internet Website: http://www.interconnection.bellsouth.com/become_a_clec/html/interconnection.htm | | | | | | | | | | | | | | | |
| OPERATIONAL SUPPORT SYSTEMS (OSS) - "REGIONAL RATES" | | | | | | | | | | | | | | | | |
| | NOTE: (1) CLEC should contact its contract negotiator if it prefers the "state specific" OSS charges as ordered by the State Commissions. The OSS charges currently contained in this rate exhibit are the BellSouth "regional" service ordering charges. CLEC may elect either the state specific Commission ordered rates for the service ordering charges, or CLEC may elect the regional service ordering charge, however, CLEC can not obtain a mixture of the two regardless if CLEC has a interconnection contract established in each of the 9 states. | | | | | | | | | | | | | | | |
| | NOTE: (2) Any element that can be ordered electronically will be billed according to the SOMEC rate listed in this category. Please refer to BellSouth's Local Ordering Handbook (LOH) to determine if a product can be ordered electronically. For those elements that cannot be ordered electronically at present per the LOH, the listed SOMEC rate in this category reflects the charge that would be billed to a CLEC once electronic ordering capabilities come on-line for that element. Otherwise, the manual ordering charge, SOMAN, will be applied to a CLECs bill when it submits an LSR to BellSouth. | | | | | | | | | | | | | | | |
| | OSS - Electronic Service Order Charge, Per Local Service Request (LSR) - UNE Only | | | | SOMEC | | 3.50 | 0.00 | 3.50 | 0.00 | | | | | | |
| | OSS - Manual Service Order Charge, Per Local Service Request (LSR) - UNE Only | | | | SOMAN | | 7.86 | 0.00 | 0.99 | 0.00 | | | | | | |
| UNE SERVICE DATE ADVANCEMENT CHARGE | | | | | | | | | | | | | | | | |
| | NOTE: The Expedite charge will be maintained commensurate with BellSouth's FCC No.1 Tariff, Section 5 as applicable. | | | | | | | | | | | | | | | |
| | UNE Expedite Charge per Circuit or Line Assignable USOC, per Day | | | UAL, UEANL, UCL, UEF, UDF, UEQ, UDL, UENTW, UDN, UEA, UHL, ULC, USL, U1T12, U1T48, U1TD1, U1TD3, U1TDX, U1TO3, U1TS1, U1TVX, UC1BC, UC1BL, UC1CC, UC1CL, UC1DC, UC1DL, UC1EC, UC1EL, UC1FC, UC1FL, UC1GC, UC1GL, UC1HC, UC1HL, UDL12, UDL48, UDLO3, UDLSX, UE3, ULD12, ULD48, ULDD1, ULDD3, ULDDX, ULDO3, ULDS1, ULDVX, UNC1X, UNC3X, UNCDX, UNCNX, UNCSX, UNCVX, UNLD1, UNLD3, UXTD1, UXTD3, UXTS1, U1TUC, U1TUD, U1TUB, U1TUA | SDASP | | 200.00 | | | | | | | | | |
| UNBUNDLED EXCHANGE ACCESS LOOP | | | | | | | | | | | | | | | | |
| | 2-WIRE ANALOG VOICE GRADE LOOP | | | | | | | | | | | | | | | |
| | 2-Wire Analog Voice Grade Loop - Service Level 1- Zone 1 | | 1 | UEANL | UEAL2 | 10.56 | 46.66 | 22.57 | 26.65 | 7.65 | | | | | | |
| | 2-Wire Analog Voice Grade Loop - Service Level 1- Zone 2 | | 2 | UEANL | UEAL2 | 15.34 | 46.66 | 22.57 | 26.65 | 7.65 | | | | | | |
| | 2-Wire Analog Voice Grade Loop - Service Level 1- Zone 3 | | 3 | UEANL | UEAL2 | 31.11 | 46.66 | 22.57 | 26.65 | 7.65 | | | | | | |
| | 2-Wire Analog Voice Grade Loop - Service Level 1- Zone 1 | | 1 | UEANL | UEASL | 10.56 | 46.66 | 22.57 | 26.65 | 7.65 | | | | | | |
| | 2-Wire Analog Voice Grade Loop - Service Level 1- Zone 2 | | 2 | UEANL | UEASL | 15.34 | 46.66 | 22.57 | 26.65 | 7.65 | | | | | | |
| | 2-Wire Analog Voice Grade Loop - Service Level 1- Zone 3 | | 3 | UEANL | UEASL | 31.11 | 46.66 | 22.57 | 26.65 | 7.65 | | | | | | |
| | Unbundled Miscellaneous Rate Element, Tag Loop at End User Premise | | | UEANL | URETL | | 8.33 | 0.83 | | | | | | | | |
| | Loop Testing - Basic 1st Half Hour | | | UEANL | URET1 | | 46.88 | 46.88 | | | | | | | | |
| | Loop Testing - Basic Additional Half Hour | | | UEANL | URETA | | 24.16 | 24.16 | | | | | | | | |

## UNBUNDLED NETWORK ELEMENTS - Kentucky

| CATEGORY | RATE ELEMENTS | Interim | Zone | BCS | USOC | RATES ($) | | | | | Svc Order Submitted Elec per LSR | Svc Order Submitted Manually per LSR | Attachment: 2 | | Exhibit: A | |
|---|---|---|---|---|---|---|---|---|---|---|---|---|---|---|---|---|
| | | | | | | Rec | Nonrecurring | | Nonrecurring Disconnect | | | | Incremental Charge - Manual Svc Order vs. Electronic-1st | Incremental Charge - Manual Svc Order vs. Electronic-Add'l | Incremental Charge - Manual Svc Order vs. Electronic-Disc 1st | Incremental Charge - Manual Svc Order vs. Electronic-Disc Add'l |
| | | | | | | | First | Add'l | First | Add'l | OSS Rates ($) SOMEC | SOMAN | SOMAN | SOMAN | SOMAN | SOMAN |
| | CLEC to CLEC Conversion Charge Without Outside Dispatch (UVL-SL1) | | | UEANL | UREWO | | 15.78 | 8.94 | | | | | | | | |
| | Unbundled Voice Loop, Non-Design Voice Loop, billing for BST providing make-up (Engineering Information - E.I.) | | | UEANL | UEANM | | 13.49 | 13.49 | | | | | | | | |
| | Manual Order Coordination for UVL-SL1s (per loop) | | | UEANL | UEAMC | | 9.00 | 9.00 | | | | | | | | |
| | Order Coordination for Specified Conversion Time for UVL-SL1 (per LSR) | | | UEANL | OCOSL | | 23.01 | 23.01 | | | | | | | | |
| **2-WIRE Unbundled COPPER LOOP** | | | | | | | | | | | | | | | | |
| | 2-Wire Unbundled Copper Loop - Non-Designed Zone 1 | | 1 | UEQ | UEQ2X | 10.58 | 44.97 | 20.89 | 25.64 | 6.65 | | | | | | |
| | 2 Wire Unbundled Copper Loop - Non-Designed - Zone 2 | | 2 | UEQ | UEQ2X | 11.51 | 44.97 | 20.89 | 25.64 | 6.65 | | | | | | |
| | 2 Wire Unbundled Copper Loop - Non-Designed - Zone 3 | | 3 | UEQ | UEQ2X | 13.19 | 44.97 | 20.89 | 25.64 | 6.65 | | | | | | |
| | Unbundled Miscellaneous Rate Element, Tag Loop at End User Premise | | | UEQ | URETL | | 8.33 | 0.83 | | | | | | | | |
| | Manual Order Coordination 2 Wire Unbundled Copper Loop - Non-Designed (per loop) | | | UEQ | USBMC | | 9.00 | 9.00 | | | | | | | | |
| | Unbundled Copper Loop, Non-Design Copper Loop, billing for BST providing make-up (Engineering Information - E.I.) | | | UEQ | UEQMU | | 13.49 | 13.49 | | | | | | | | |
| | Loop Testing - Basic 1st Half Hour | | | UEQ | URET1 | | 46.88 | 46.88 | | | | | | | | |
| | Loop Testing - Basic Additional Half Hour | | | UEQ | URETA | | 24.16 | 24.16 | | | | | | | | |
| | CLEC to CLEC Conversion Charge Without Outside Dispatch (UCL-ND) | | | UEQ | UREWO | | 14.27 | 7.43 | | | | | | | | |
| **UNBUNDLED EXCHANGE ACCESS LOOP** | | | | | | | | | | | | | | | | |
| **2-WIRE ANALOG VOICE GRADE LOOP** | | | | | | | | | | | | | | | | |
| | 2 Wire Analog Voice Grade Loop-Service Level 1-Line Splitting-Zone 1 | | 1 | UEPSR UEPSB | UEALS | 10.56 | 46.66 | 22.57 | 26.65 | 7.65 | | | | | | |
| | 2 Wire Analog Voice Grade Loop-Service Level 1-Line Splitting-Zone 1 | | 1 | UEPSR UEPSB | UEABS | 10.56 | 46.66 | 22.57 | 26.65 | 7.65 | | | | | | |
| | 2 Wire Analog Voice Grade Loop- Service Level 1-Line Splitting-Zone 2 | | 2 | UEPSR UEPSB | UEALS | 15.34 | 46.66 | 22.57 | 26.65 | 7.65 | | | | | | |
| | 2 Wire Analog Voice Grade Loop- Service Level 1-Line Splitting-Zone 2 | | 2 | UEPSR UEPSB | UEABS | 15.34 | 46.66 | 22.57 | 26.65 | 7.65 | | | | | | |
| | 2 Wire Analog Voice Grade Loop-Service Level 1-Line Splitting-Zone 3 | | 3 | UEPSR UEPSB | UEALS | 31.11 | 46.66 | 22.57 | 26.65 | 7.65 | | | | | | |
| | 2 Wire Analog Voice Grade Loop-Service Level 1-Line Splitting-Zone 3 | | 3 | UEPSR UEPSB | UEABS | 31.11 | 46.66 | 22.57 | 26.65 | 7.65 | | | | | | |
| **UNBUNDLED EXCHANGE ACCESS LOOP** | | | | | | | | | | | | | | | | |
| **2-WIRE ANALOG VOICE GRADE LOOP** | | | | | | | | | | | | | | | | |
| | 2-Wire Analog Voice Grade Loop - Service Level 2 w/Loop or Ground Start Signaling - Zone 1 | | 1 | UEA | UEAL2 | 12.67 | 134.89 | 81.87 | 73.65 | 14.88 | | | | | | |
| | 2-Wire Analog Voice Grade Loop - Service Level 2 w/Loop or Ground Start Signaling - Zone 2 | | 2 | UEA | UEAL2 | 17.45 | 134.89 | 81.87 | 73.65 | 14.88 | | | | | | |
| | 2-Wire Analog Voice Grade Loop - Service Level 2 w/Loop or Ground Start Signaling - Zone 3 | | 3 | UEA | UEAL2 | 33.22 | 134.89 | 81.87 | 73.65 | 14.88 | | | | | | |
| | Order Coordination for Specified Conversion Time (per LSR) | | | UEA | OCOSL | | 23.01 | | | | | | | | | |
| | 2-Wire Analog Voice Grade Loop - Service Level 2 w/Reverse Battery Signaling - Zone 1 | | 1 | UEA | UEAR2 | 12.67 | 134.89 | 81.87 | 73.65 | 14.88 | | | | | | |
| | 2-Wire Analog Voice Grade Loop - Service Level 2 w/Reverse Battery Signaling - Zone 2 | | 2 | UEA | UEAR2 | 17.45 | 134.89 | 81.87 | 73.65 | 14.88 | | | | | | |
| | 2-Wire Analog Voice Grade Loop - Service Level 2 w/Reverse Battery Signaling - Zone 3 | | 3 | UEA | UEAR2 | 33.22 | 134.89 | 81.87 | 73.65 | 14.88 | | | | | | |
| | Order Coordination for Specified Conversion Time (per LSR) | | | UEA | OCOSL | | 23.01 | | | | | | | | | |
| | CLEC to CLEC Conversion Charge without outside dispatch | | | UEA | UREWO | | 87.72 | 36.36 | | | | | | | | |
| | Loop Tagging - Service Level 2 (SL2) | | | UEA | URETL | | 11.21 | 1.10 | | | | | | | | |
| **4-WIRE ANALOG VOICE GRADE LOOP** | | | | | | | | | | | | | | | | |
| | 4-Wire Analog Voice Grade Loop - Zone 1 | | 1 | UEA | UEAL4 | 29.26 | 164.11 | 112.36 | 78.91 | 18.66 | | | | | | |
| | 4-Wire Analog Voice Grade Loop - Zone 2 | | 2 | UEA | UEAL4 | 34.25 | 164.11 | 112.36 | 78.91 | 18.66 | | | | | | |
| | 4-Wire Analog Voice Grade Loop - Zone 3 | | 3 | UEA | UEAL4 | 85.06 | 164.11 | 112.36 | 78.91 | 18.66 | | | | | | |
| | Order Coordination for Specified Conversion Time (per LSR) | | | UEA | OCOSL | | 23.01 | | | | | | | | | |
| | CLEC to CLEC Conversion Charge without outside dispatch | | | UEA | UREWO | | 87.72 | 36.36 | | | | | | | | |

## UNBUNDLED NETWORK ELEMENTS - Kentucky

| CATEGORY | RATE ELEMENTS | Interim | Zone | BCS | USOC | RATES ($) | | | | | Svc Order Submitted Elec per LSR | Svc Order Submitted Manually per LSR | Attachment: 2 Incremental Charge - Manual Svc Order vs. Electronic-1st | Attachment: 2 Incremental Charge - Manual Svc Order vs. Electronic-Add'l | Exhibit: A Incremental Charge - Manual Svc Order vs. Electronic-Disc 1st | Exhibit: A Incremental Charge - Manual Svc Order vs. Electronic-Disc Add'l |
|---|---|---|---|---|---|---|---|---|---|---|---|---|---|---|---|---|
| | | | | | | Rec | Nonrecurring | | Nonrecurring Disconnect | | OSS Rates ($) | | | | | |
| | | | | | | | First | Add'l | First | Add'l | SOMEC | SOMAN | SOMAN | SOMAN | SOMAN | SOMAN |
| 2-WIRE ISDN DIGITAL GRADE LOOP | | | | | | | | | | | | | | | | |
| | 2-Wire ISDN Digital Grade Loop - Zone 1 | | 1 | UDN | U1L2X | 18.44 | 146.77 | 95.02 | 71.38 | 13.83 | | | | | | |
| | 2-Wire ISDN Digital Grade Loop - Zone 2 | | 2 | UDN | U1L2X | 25.08 | 146.77 | 95.02 | 71.38 | 13.83 | | | | | | |
| | 2-Wire ISDN Digital Grade Loop - Zone 3 | | 3 | UDN | U1L2X | 42.87 | 146.77 | 95.02 | 71.38 | 13.83 | | | | | | |
| | Order Coordination For Specified Conversion Time (per LSR) | | | UDN | OCOSL | | 23.01 | | | | | | | | | |
| | CLEC to CLEC Conversion Charge without outside dispatch | | | UDN | UREWO | | 91.63 | 44.16 | | | | | | | | |
| 2-WIRE ASYMMETRICAL DIGITAL SUBSCRIBER LINE (ADSL) COMPATIBLE LOOP | | | | | | | | | | | | | | | | |
| | 2 Wire Unbundled ADSL Loop including manual service inquiry & facility reservation - Zone 1 | | 1 | UAL | UAL2X | 10.82 | 141.98 | 79.73 | 69.02 | 11.47 | | | | | | |
| | 2 Wire Unbundled ADSL Loop including manual service inquiry & facility reservation - Zone 2 | | 2 | UAL | UAL2X | 11.79 | 141.98 | 79.73 | 69.02 | 11.47 | | | | | | |
| | 2 Wire Unbundled ADSL Loop including manual service inquiry & facility reservation - Zone 3 | | 3 | UAL | UAL2X | 12.87 | 141.98 | 79.73 | 69.02 | 11.47 | | | | | | |
| | Order Coordination for Specified Conversion Time (per LSR) | | | UAL | OCOSL | | 23.01 | | | | | | | | | |
| | 2 Wire Unbundled ADSL Loop without manual service inquiry & facility reservaton - Zone 1 | | 1 | UAL | UAL2W | 10.82 | 121.18 | 69.00 | 69.09 | 11.54 | | | | | | |
| | 2 Wire Unbundled ADSL Loop without manual service inquiry & facility reservaton - Zone 2 | | 2 | UAL | UAL2W | 11.79 | 121.18 | 69.00 | 69.09 | 11.54 | | | | | | |
| | 2 Wire Unbundled ADSL Loop without manual service inquiry & facility reservaton - Zone 3 | | 3 | UAL | UAL2W | 12.87 | 121.18 | 69.00 | 69.09 | 11.54 | | | | | | |
| | Order Coordination for Specified Conversion Time (per LSR) | | | UAL | OCOSL | | 23.01 | | | | | | | | | |
| | CLEC to CLEC Conversion Charge without outside dispatch | | | UAL | UREWO | | 86.20 | 40.40 | | | | | | | | |
| 2-WIRE HIGH BIT RATE DIGITAL SUBSCRIBER LINE (HDSL) COMPATIBLE LOOP | | | | | | | | | | | | | | | | |
| | 2 Wire Unbundled HDSL Loop including manual service inquiry & facility reservation - Zone 1 | | 1 | UHL | UHL2X | 8.75 | 151.54 | 89.29 | 69.09 | 11.54 | | | | | | |
| | 2 Wire Unbundled HDSL Loop including manual service inquiry & facility reservation - Zone 2 | | 2 | UHL | UHL2X | 9.56 | 151.54 | 89.29 | 69.09 | 11.54 | | | | | | |
| | 2 Wire Unbundled HDSL Loop including manual service inquiry & facility reservation - Zone 3 | | 3 | UHL | UHL2X | 10.61 | 151.54 | 89.29 | 69.09 | 11.54 | | | | | | |
| | Order Coordination for Specified Conversion Time (per LSR) | | | UHL | OCOSL | | 23.01 | | | | | | | | | |
| | 2 Wire Unbundled HDSL Loop without manual service inquiry and facility reservation - Zone 1 | | 1 | UHL | UHL2W | 8.75 | 130.74 | 78.56 | 69.09 | 11.54 | | | | | | |
| | 2 Wire Unbundled HDSL Loop without manual service inquiry and facility reservation - Zone 2 | | 2 | UHL | UHL2W | 9.56 | 130.74 | 78.56 | 69.09 | 11.54 | | | | | | |
| | 2 Wire Unbundled HDSL Loop without manual service inquiry and facility reservation - Zone 3 | | 3 | UHL | UHL2W | 10.61 | 130.74 | 78.56 | 69.09 | 11.54 | | | | | | |
| | Order Coordination for Specified Conversion Time (per LSR) | | | UHL | OCOSL | | 23.01 | | | | | | | | | |
| | CLEC to CLEC Conversion Charge without outside dispatch | | | UHL | UREWO | | 86.14 | 40.40 | | | | | | | | |
| 4-WIRE HIGH BIT RATE DIGITAL SUBSCRIBER LINE (HDSL) COMPATIBLE LOOP | | | | | | | | | | | | | | | | |
| | 4 Wire Unbundled HDSL Loop including manual service inquiry and facility reservation - Zone 1 | | 1 | UHL | UHL4X | 13.95 | 185.75 | 123.50 | 74.95 | 14.69 | | | | | | |
| | 4-Wire Unbundled HDSL Loop including manual service inquiry and facility reservation - Zone 2 | | 2 | UHL | UHL4X | 15.68 | 185.75 | 123.50 | 74.95 | 14.69 | | | | | | |
| | 4-Wire Unbundled HDSL Loop including manual service inquiry and facility reservation - Zone 3 | | 3 | UHL | UHL4X | 16.98 | 185.75 | 123.50 | 74.95 | 14.69 | | | | | | |
| | Order Coordination for Specified Conversion Time (per LSR) | | | UHL | OCOSL | | 23.01 | | | | | | | | | |
| | 4-Wire Unbundled HDSL Loop without manual service inquiry and facility reservation - Zone 1 | | 1 | UHL | UHL4W | 13.95 | 164.95 | 114.04 | 77.32 | 15.80 | | | | | | |
| | 4-Wire Unbundled HDSL Loop without manual service inquiry and facility reservation - Zone 2 | | 2 | UHL | UHL4W | 15.68 | 164.95 | 114.04 | 77.32 | 15.80 | | | | | | |
| | 4-Wire Unbundled HDSL Loop without manual service inquiry and facility reservation - Zone 3 | | 3 | UHL | UHL4W | 16.98 | 164.95 | 114.04 | 77.32 | 15.80 | | | | | | |
| | Order Coordination for Specified Conversion Time (per LSR) | | | UHL | OCOSL | | 23.01 | | | | | | | | | |
| | CLEC to CLEC Conversion Charge without outside dispatch | | | UHL | UREWO | | 86.14 | 40.40 | | | | | | | | |
| 4-WIRE DS1 DIGITAL LOOP | | | | | | | | | | | | | | | | |
| | 4-Wire DS1 Digital Loop - Zone 1 | | 1 | USL | USLXX | 86.47 | 306.69 | 174.44 | 65.83 | 14.55 | | | | | | |
| | 4-Wire DS1 Digital Loop - Zone 2 | | 2 | USL | USLXX | 114.10 | 306.69 | 174.44 | 65.83 | 14.55 | | | | | | |
| | 4-Wire DS1 Digital Loop - Zone 3 | | 3 | USL | USLXX | 297.76 | 306.69 | 174.44 | 65.83 | 14.55 | | | | | | |
| | Order Coordination for Specified Conversion Time (per LSR) | | | USL | OCOSL | | 23.01 | | | | | | | | | |

## UNBUNDLED NETWORK ELEMENTS - Kentucky

| CATEGORY | RATE ELEMENTS | Interim | Zone | BCS | USOC | RATES ($) | | | | | Svc Order Submitted Elec per LSR | Svc Order Submitted Manually per LSR | Attachment: 2 | | Exhibit: A | |
|---|---|---|---|---|---|---|---|---|---|---|---|---|---|---|---|---|
| | | | | | | | | | | | | | Incremental Charge - Manual Svc Order vs. Electronic-1st | Incremental Charge - Manual Svc Order vs. Electronic-Add'l | Incremental Charge - Manual Svc Order vs. Electronic-Disc 1st | Incremental Charge - Manual Svc Order vs. Electronic-Disc Add'l |
| | | | | | | Rec | Nonrecurring | | Nonrecurring Disconnect | | OSS Rates ($) | | | | | |
| | | | | | | | First | Add'l | First | Add'l | SOMEC | SOMAN | SOMAN | SOMAN | SOMAN | SOMAN |
| | CLEC to CLEC Conversion Charge without outside dispatch | | | USL | UREWO | | 101.09 | 43.04 | | | | | | | | |
| | **4-WIRE 19.2, 56 OR 64 KBPS DIGITAL GRADE LOOP** | | | | | | | | | | | | | | | |
| | 4 Wire Unbundled Digital 19.2 Kbps | | 1 | UDL | UDL19 | 27.59 | 157.81 | 106.06 | 78.91 | 18.66 | | | | | | |
| | 4 Wire Unbundled Digital 19.2 Kbps | | 2 | UDL | UDL19 | 32.48 | 157.81 | 106.06 | 78.91 | 18.66 | | | | | | |
| | 4 Wire Unbundled Digital 19.2 Kbps | | 3 | UDL | UDL19 | 36.37 | 157.81 | 106.06 | 78.91 | 18.66 | | | | | | |
| | 4 Wire Unbundled Digital Loop 56 Kbps - Zone 1 | | 1 | UDL | UDL56 | 27.59 | 157.81 | 106.06 | 78.91 | 18.66 | | | | | | |
| | 4 Wire Unbundled Digital Loop 56 Kbps - Zone 2 | | 2 | UDL | UDL56 | 32.48 | 157.81 | 106.06 | 78.91 | 18.66 | | | | | | |
| | 4 Wire Unbundled Digital Loop 56 Kbps - Zone 3 | | 3 | UDL | UDL56 | 36.37 | 157.81 | 106.06 | 78.91 | 18.66 | | | | | | |
| | Order Coordination for Specified Conversion Time (per LSR) | | | UDL | OCOSL | | 23.01 | | | | | | | | | |
| | 4 Wire Unbundled Digital Loop 64 Kbps - Zone 1 | | 1 | UDL | UDL64 | 27.59 | 157.81 | 106.06 | 78.91 | 18.66 | | | | | | |
| | 4 Wire Unbundled Digital Loop 64 Kbps - Zone 2 | | 2 | UDL | UDL64 | 32.48 | 157.81 | 106.06 | 78.91 | 18.66 | | | | | | |
| | 4 Wire Unbundled Digital Loop 64 Kbps - Zone 3 | | 3 | UDL | UDL64 | 36.37 | 157.81 | 106.06 | 78.91 | 18.66 | | | | | | |
| | Order Coordination for Specified Conversion Time (per LSR) | | | UDL | OCOSL | | 23.01 | | | | | | | | | |
| | CLEC to CLEC Conversion Charge without outside dispatch | | | UDL | UREWO | | 102.13 | 49.75 | | | | | | | | |
| | **2-WIRE Unbundled COPPER LOOP** | | | | | | | | | | | | | | | |
| | 2-Wire Unbundled Copper Loop-Designed including manual service inquiry & facility reservation - Zone 1 | | 1 | UCL | UCLPB | 10.82 | 140.95 | 78.70 | 69.09 | 11.54 | | | | | | |
| | 2-Wire Unbundled Copper Loop-Designed including manual service inquiry & facility reservation - Zone 2 | | 2 | UCL | UCLPB | 11.79 | 140.95 | 78.70 | 69.09 | 11.54 | | | | | | |
| | 2 Wire Unbundled Copper Loop-Designed including manual service inquiry & facility reservation - Zone 3 | | 3 | UCL | UCLPB | 12.87 | 140.95 | 78.70 | 69.09 | 11.54 | | | | | | |
| | Order Coordination for Unbundled Copper Loops (per loop) | | | UCL | UCLMC | | 9.00 | 9.00 | | | | | | | | |
| | 2-Wire Unbundled Copper Loop-Designed without manual service inquiry and facility reservation - Zone 1 | | 1 | UCL | UCLPW | 10.82 | 120.15 | 67.97 | 69.09 | 11.54 | | | | | | |
| | 2-Wire Unbundled Copper Loop-Designed without manual service inquiry and facility reservation - Zone 2 | | 2 | UCL | UCLPW | 11.79 | 120.15 | 67.97 | 69.09 | 11.54 | | | | | | |
| | 2-Wire Unbundled Copper Loop-Designed without manual service inquiry and facility reservation - Zone 3 | | 3 | UCL | UCLPW | 12.87 | 120.15 | 67.97 | 69.09 | 11.54 | | | | | | |
| | Order Coordination for Unbundled Copper Loops (per loop) | | | UCL | UCLMC | | 9.00 | 9.00 | | | | | | | | |
| | CLEC to CLEC Conversion Charge without outside dispatch (UCL-Des) | | | UCL | UREWO | | 97.23 | 42.48 | | | | | | | | |
| | **4-WIRE COPPER LOOP** | | | | | | | | | | | | | | | |
| | 4-Wire Copper Loop-Designed including manual service inquiry and facility reservation - Zone 1 | | 1 | UCL | UCL4S | 16.92 | 170.31 | 108.06 | 74.95 | 14.69 | | | | | | |
| | 4-Wire Copper Loop-Designed including manual service inquiry and facility reservation - Zone 2 | | 2 | UCL | UCL4S | 17.36 | 170.31 | 108.06 | 74.95 | 14.69 | | | | | | |
| | 4-Wire Copper Loop-Designed including manual service inquiry and facility reservation - Zone 3 | | 3 | UCL | UCL4S | 28.10 | 170.31 | 108.06 | 74.95 | 14.69 | | | | | | |
| | Order Coordination for Unbundled Copper Loops (per loop) | | | UCL | UCLMC | | 9.00 | 9.00 | | | | | | | | |
| | 4-Wire Copper Loop-Designed without manual service inquiry and facility reservation - Zone 1 | | 1 | UCL | UCL4W | 16.92 | 149.52 | 97.33 | 74.95 | 14.69 | | | | | | |
| | 4-Wire Copper Loop-Designed without manual service inquiry and facility reservation - Zone 2 | | 2 | UCL | UCL4W | 17.36 | 149.52 | 97.33 | 74.95 | 14.69 | | | | | | |
| | 4-Wire Copper Loop-Designed without manual service inquiry and facility reservation - Zone 3 | | 3 | UCL | UCL4W | 28.10 | 149.52 | 97.33 | 74.95 | 14.69 | | | | | | |
| | Order Coordination for Unbundled Copper Loops (per loop) | | | UCL | UCLMC | | 9.00 | 9.00 | | | | | | | | |
| | CLEC to CLEC Conversion Charge without outside dispatch (UCL-Des) | | | UCL | UREWO | | 97.23 | 42.48 | | | | | | | | |
| **LOOP MODIFICATION** | | | | | | | | | | | | | | | | |
| | Unbundled Loop Modification, Removal of Load Coils - 2 Wire pair less than or equal to 18k ft, per Unbundled Loop | | | UAL, UHL, UCL, UEQ, ULS, UEA, UEANL, UEPSR, UEPSB | ULM2L | | 9.24 | 9.24 | | | | | | | | |
| | Unbundled Loop Modification Removal of Load Coils - 4 Wire less than or equal to 18K ft, per Unbundled Loop | | | UHL, UCL, UEA | ULM4L | | 9.24 | 9.24 | | | | | | | | |
| | Unbundled Loop Modification Removal of Bridged Tap Removal, per unbundled loop | | | UAL, UHL, UCL, UEQ, ULS, UEA, UEANL, UEPSR, UEPSB | ULMBT | | 10.47 | 10.47 | | | | | | | | |

| UNBUNDLED NETWORK ELEMENTS - Kentucky | | | | | | | | | | | | | | Attachment: 2 | | Exhibit: A | |
|---|---|---|---|---|---|---|---|---|---|---|---|---|---|---|---|---|---|
| CATEGORY | RATE ELEMENTS | Interim | Zone | BCS | USOC | RATES ($) | | | | | Svc Order Submitted Elec per LSR | Svc Order Submitted Manually per LSR | Incremental Charge - Manual Svc Order vs. Electronic-1st | Incremental Charge - Manual Svc Order vs. Electronic-Add'l | Incremental Charge - Manual Svc Order vs. Electronic-Disc 1st | Incremental Charge - Manual Svc Order vs. Electronic-Disc Add'l |
| | | | | | | Rec | Nonrecurring | | Nonrecurring Disconnect | | OSS Rates ($) | | | | | |
| | | | | | | | First | Add'l | First | Add'l | SOMEC | SOMAN | SOMAN | SOMAN | SOMAN | SOMAN |
| SUB-LOOPS | | | | | | | | | | | | | | | | |
| | Sub-Loop Distribution | | | | | | | | | | | | | | | |
| | Sub-Loop - Per Cross Box Location - CLEC Feeder Facility Set-Up | I | | UEANL | USBSA | | 207.91 | 207.91 | | | | | | | | |
| | Sub-Loop - Per Cross Box Location - Per 25 Pair Panel Set-Up | I | | UEANL | USBSB | | 12.50 | 12.50 | | | | | | | | |
| | Sub-Loop - Per Building Equipment Room - CLEC Feeder Facility Set-Up | I | | UEANL | USBSC | | 80.87 | 80.87 | | | | | | | | |
| | Sub-Loop - Per Building Equipment Room - Per 25 Pair Panel Set-Up | I | | UEANL | USBSD | | 45.04 | 45.04 | | | | | | | | |
| | Sub-Loop Distribution Per 2-Wire Analog Voice Grade Loop - Zone 1 | I | 1 | UEANL | USBN2 | 6.34 | 85.03 | 39.05 | 59.81 | 7.90 | | | | | | |
| | Sub-Loop Distribution Per 2-Wire Analog Voice Grade Loop - Zone 2 | I | 2 | UEANL | USBN2 | 9.06 | 85.03 | 39.05 | 59.81 | 7.90 | | | | | | |
| | Sub-Loop Distribution Per 2-Wire Analog Voice Grade Loop - Zone 3 | I | 3 | UEANL | USBN2 | 14.82 | 85.03 | 39.05 | 59.81 | 7.90 | | | | | | |
| | Order Coordination for Unbundled Sub-Loops, per sub-loop pair | | | UEANL | USBMC | | 9.00 | 9.00 | | | | | | | | |
| | Sub-Loop Distribution Per 4-Wire Analog Voice Grade Loop - Zone 1 | | 1 | UEANL | USBN4 | 8.14 | 102.31 | 56.32 | 65.24 | 10.88 | | | | | | |
| | Sub-Loop Distribution Per 4-Wire Analog Voice Grade Loop - Zone 2 | | 2 | UEANL | USBN4 | 8.63 | 102.31 | 56.32 | 65.24 | 10.88 | | | | | | |
| | Sub-Loop Distribution Per 4-Wire Analog Voice Grade Loop - Zone 3 | | 3 | UEANL | USBN4 | 25.60 | 102.31 | 56.32 | 65.24 | 10.88 | | | | | | |
| | Order Coordination for Unbundled Sub-Loops, per sub-loop pair | | | UEANL | USBMC | | 9.00 | 9.00 | | | | | | | | |
| | Sub-Loop 2-Wire Intrabuilding Network Cable (INC) | I | | UEANL | USBR2 | 2.57 | 68.35 | 22.36 | 59.81 | 7.90 | | | | | | |
| | Order Coordination for Unbundled Sub-Loops, per sub-loop pair | | | UEANL | USBMC | | 9.00 | 9.00 | | | | | | | | |
| | Sub-Loop 4-Wire Intrabuilding Network Cable (INC) | I | | UEANL | USBR4 | 4.98 | 76.49 | 30.51 | 65.24 | 10.88 | | | | | | |
| | Order Coordination for Unbundled Sub-Loops, per sub-loop pair | | | UEANL | USBMC | | 9.00 | 9.00 | | | | | | | | |
| | Loop Testing - Basic 1st Half Hour | | | UEANL | URET1 | | 46.88 | 46.88 | | | | | | | | |
| | Loop Testing - Basic Additional Half Hour | | | UEANL | URETA | | 24.16 | 24.16 | | | | | | | | |
| | 2 Wire Copper Unbundled Sub-Loop Distribution - Zone 1 | I | 1 | UEF | UCS2X | 5.45 | 85.03 | 39.05 | 59.81 | 7.90 | | | | | | |
| | 2 Wire Copper Unbundled Sub-Loop Distribution - Zone 2 | I | 2 | UEF | UCS2X | 7.06 | 85.03 | 39.05 | 59.81 | 7.90 | | | | | | |
| | 2 Wire Copper Unbundled Sub-Loop Distribution - Zone 3 | I | 3 | UEF | UCS2X | 9.67 | 85.03 | 39.05 | 59.81 | 7.90 | | | | | | |
| | Order Coordination for Unbundled Sub-Loops, per sub-loop pair | | | UEF | USBMC | | 9.00 | 9.00 | | | | | | | | |
| | 4 Wire Copper Unbundled Sub-Loop Distribution - Zone 1 | I | 1 | UEF | UCS4X | 7.09 | 102.31 | 56.32 | 65.24 | 10.88 | | | | | | |
| | 4 Wire Copper Unbundled Sub-Loop Distribution - Zone 2 | I | 2 | UEF | UCS4X | 8.66 | 102.31 | 56.32 | 65.24 | 10.88 | | | | | | |
| | 4 Wire Copper Unbundled Sub-Loop Distribution - Zone 3 | I | 3 | UEF | UCS4X | 19.40 | 102.31 | 56.32 | 65.24 | 10.88 | | | | | | |
| | Order Coordination for Unbundled Sub-Loops, per sub-loop pair | | | UEF | USBMC | | 9.00 | 9.00 | | | | | | | | |
| | Loop Testing - Basic 1st Half Hour | | | UEF | URET1 | | 46.88 | 46.88 | | | | | | | | |
| | Loop Testing - Basic Additional Half Hour | | | UEF | URETA | | 24.16 | 24.16 | | | | | | | | |
| | Unbundled Network Terminating Wire (UNTW) | | | | | | | | | | | | | | | |
| | Unbundled Network Terminating Wire (UNTW) per Pair | | | UENTW | UENPP | 0.53 | 23.51 | 23.51 | | | | | | | | |
| | Network Interface Device (NID) | | | | | | | | | | | | | | | |
| | Network Interface Device (NID) - 1-2 lines | | | UENTW | UND12 | | 73.53 | 49.47 | | | | | | | | |
| | Network Interface Device (NID) - 1-6 lines | | | UENTW | UND16 | | 115.96 | 91.91 | | | | | | | | |
| | Network Interface Device Cross Connect - 2 W | | | UENTW | UNDC2 | | 8.56 | 8.56 | | | | | | | | |
| | Network Interface Device Cross Connect - 4W | | | UENTW | UNDC4 | | 8.56 | 8.56 | | | | | | | | |
| UNE OTHER, PROVISIONING ONLY - NO RATE | | | | | | | | | | | | | | | | |
| | NID - Dispatch and Service Order for NID installation | | | UENTW | UNDBX | 0.00 | 0.00 | | | | | | | | | |
| | UNTW Circuit Id Establishment, Provisioning Only - No Rate | | | UENTW | UENCE | 0.00 | 0.00 | | | | | | | | | |
| | Unbundled Contract Name, Provisioning Only - No Rate | | | UEANL,UEF,UEQ,UENTW | UNECN | 0.00 | 0.00 | | | | | | | | | |
| UNE OTHER, PROVISIONING ONLY - NO RATE | | | | | | | | | | | | | | | | |

| UNBUNDLED NETWORK ELEMENTS - Kentucky | | | | | | | | | | | | | | Attachment: 2 | | Exhibit: A | |
|---|---|---|---|---|---|---|---|---|---|---|---|---|---|---|---|---|---|
| CATEGORY | | RATE ELEMENTS | Interim | Zone | BCS | USOC | RATES ($) | | | | | Svc Order Submitted Elec per LSR | Svc Order Submitted Manually per LSR | Incremental Charge - Manual Svc Order vs. Electronic-1st | Incremental Charge - Manual Svc Order vs. Electronic-Add'l | Incremental Charge - Manual Svc Order vs. Electronic-Disc 1st | Incremental Charge - Manual Svc Order vs. Electronic-Disc Add'l |
| | | | | | | | Rec | Nonrecurring | | Nonrecurring Disconnect | | OSS Rates ($) | | | | | |
| | | | | | | | | First | Add'l | First | Add'l | SOMEC | SOMAN | SOMAN | SOMAN | SOMAN | SOMAN |
| | | Unbundled Contact Name, Provisioning Only - no rate | | | UAL,UCL,UDC,UDL, UDN,UEA,UHL,ULC | UNECN | 0.00 | 0.00 | | | | | | | | | |
| | | Unbundled Sub-Loop Feeder-2 Wire Cross Box Jumper - no rate | | | UEA,UDN,UCL,UDC | USBFQ | 0.00 | 0.00 | | | | | | | | | |
| | | Unbundled Sub-Loop Feeder-4 Wire Cross Box Jumper - no rate | | | UEA,USL,UCL,UDL | USBFR | 0.00 | 0.00 | | | | | | | | | |
| | | Unbundled DS1 Loop - Superframe Format Option - no rate | | | USL | CCOSF | 0.00 | 0.00 | | | | | | | | | |
| | | Unbundled DS1 Loop - Expanded Superframe Format option - no rate | | | USL | CCOEF | 0.00 | 0.00 | | | | | | | | | |
| HIGH CAPACITY UNBUNDLED LOCAL LOOP | | | | | | | | | | | | | | | | | |
| | | High Capacity Unbundled Local Loop - DS3 - Per Mile per month | | | UE3 | 1L5ND | 9.25 | | | | | | | | | | |
| | | High Capacity Unbundled Local Loop - DS3 - Facility Termination per month | | | UE3 | UE3PX | 308.31 | 551.38 | 338.08 | 173.00 | 120.42 | | | | | | |
| | | High Capacity Unbundled Local Loop - STS-1 - Per Mile per month | | | UDLSX | 1L5ND | 9.25 | | | | | | | | | | |
| | | High Capacity Unbundled Local Loop - STS-1 - Facility Termination per month | | | UDLSX | UDLS1 | 320.51 | 551.38 | 338.08 | 173.00 | 120.42 | | | | | | |
| LOOP MAKE-UP | | | | | | | | | | | | | | | | | |
| | | Loop Makeup - Preordering Without Reservation, per working or spare facility queried (Manual). | | | UMK | UMKLW | | 23.40 | 23.40 | | | | | | | | |
| | | Loop Makeup - Preordering With Reservation, per spare facility queried (Manual). | | | UMK | UMKLP | | 24.85 | 24.85 | | | | | | | | |
| | | Loop Makeup--With or Without Reservation, per working or spare facility queried (Mechanized) | | | UMK | UMKMQ | | 0.67 | 0.67 | | | | | | | | |
| LINE SHARING AND LINE SPLITTING | | | | | | | | | | | | | | | | | |
| | | **NOTE 1: The Line Sharing monthly recurring rates for all installations completed from October 02, 2003 through midnight October 01, 2004 shall be billed as follows:** | | | | | | | | | | | | | | | |
| | | **NOTE 1: 10/02/2003 – 10/01/2004: 25% of the rate for an unbundled copper loop non-designed ("UCLND")** | | | | | | | | | | | | | | | |
| | | **NOTE 1: 10/02/2004 – 10/01/2005: 50% of the rate for UCLND** | | | | | | | | | | | | | | | |
| | | **NOTE 1: 10/02/2005 – 10/01/2006: 75% of the rate for UCLND** | | | | | | | | | | | | | | | |
| | | **NOTE 1: Above will apply to USOCS: ULSDT and ULSCT** | | | | | | | | | | | | | | | |
| | | **NOTE 2: The Line Sharing monthly recurring rates with USOCs ULSDC and ULSCC applies only to circuits installed and inservice on or before October 1, 2003** | | | | | | | | | | | | | | | |
| | | LINE SHARING | | | | | | | | | | | | | | | |
| | | SPLITTERS-CENTRAL OFFICE BASED | | | | | | | | | | | | | | | |
| | | Line Sharing Splitter, per System 96 Line Capacity | | | ULS | ULSDA | 198.83 | 379.05 | 0.00 | 358.55 | 0.00 | | | | | | |
| | | Line Sharing Splitter, per System 24 Line Capacity | | | ULS | ULSDB | 49.71 | 379.05 | 0.00 | 358.55 | 0.00 | | | | | | |
| | | Line Sharing Splitter, Per System, 8 Line Capacity | | | ULS | ULSD8 | 16.94 | 377.71 | 0.00 | 357.29 | 0.00 | | | | | | |
| | | Line Sharing-DLEC Owned Splitter in CO-CFA activaton-deactivation (per LSOD) | | | ULS | ULSDG | | 173.62 | 0.00 | 100.40 | 0.00 | | | | | | |
| | | END USER ORDERING-CENTRAL OFFICE BASED LINE SHARING | | | | | | | | | | | | | | | |
| | | Line Sharing - per Line Activation (BST Owned splitter) - OBSOLETE see **NOTE 2 | | | ULS | ULSDC | 0.61 | 37.16 | 21.28 | 20.17 | 9.90 | | | | | | |
| | | Line Share Service, TRO per line activation, BST owned splitter - Central Office Located (25% of UCLND) - please see NOTE 1 (E:10/2/2003) | | | ULS | ULSDT | 2.65 | 37.16 | 21.28 | 20.17 | 9.90 | | | | | | |
| | | Line Share Service, TRO per line activation, BST owned splitter - Central Office Located (50% of UCLND) - please see NOTE 1 (E:10/2/2004) | | | ULS | ULSDT | 5.29 | 37.16 | 21.28 | 20.17 | 9.90 | | | | | | |
| | | Line Share Service, TRO per line activation, BST owned splitter - Central Office Located (75% of UCLND) - please see NOTE 1 (E:10/2/2005) | | | ULS | ULSDT | 7.94 | 37.16 | 21.28 | 20.17 | 9.90 | | | | | | |
| | | Line Sharing - per Subsequent Activity per Line Rearrangement(BST Owned Splitter) | | | ULS | ULSDS | | 32.90 | 16.43 | | | | | | | | |
| | | Line Sharing - per Subsequent Activity per Line Rearrangement(DLEC Owned Splitter) | | | ULS | ULSCS | | 32.90 | 16.43 | | | | | | | | |
| | | Line Sharing - per Line Activation (DLEC owned Splitter) - OBSOLETE see **NOTE 2 | | | ULS | ULSCC | 0.61 | 47.44 | 19.31 | 20.67 | 12.74 | | | | | | |

## UNBUNDLED NETWORK ELEMENTS - Kentucky

| CATEGORY | RATE ELEMENTS | Interim | Zone | BCS | USOC | RATES ($) | | | | | Svc Order Submitted Elec per LSR | Svc Order Submitted Manually per LSR | Attachment: 2 | | Exhibit: A | |
|---|---|---|---|---|---|---|---|---|---|---|---|---|---|---|---|---|
| | | | | | | | | | | | | | Incremental Charge - Manual Svc Order vs. Electronic-1st | Incremental Charge - Manual Svc Order vs. Electronic-Add'l | Incremental Charge - Manual Svc Order vs. Electronic-Disc 1st | Incremental Charge - Manual Svc Order vs. Electronic-Disc Add'l |
| | | | | | | Rec | Nonrecurring | | Nonrecurring Disconnect | | OSS Rates ($) | | | | | |
| | | | | | | | First | Add'l | First | Add'l | SOMEC | SOMAN | SOMAN | SOMAN | SOMAN | SOMAN |
| | Line Share Service, TRO per line activation, CLEC owned splitter - Central Office Located (25% of UCLND) - please see NOTE 1 (E:10/2/2003) | | | ULS | ULSCT | 2.65 | 47.44 | 19.31 | 20.67 | 12.74 | | | | | | |
| | Line Share Service, TRO per line activation, CLEC owned splitter - Central Office Located (50% of UCLND) - please see NOTE 1 (E:10/2/2004) | | | ULS | ULSCT | 5.29 | 47.44 | 19.31 | 20.67 | 12.74 | | | | | | |
| | Line Share Service, TRO per line activation, CLEC owned splitter - Central Office Located (75% of UCLND) - please see NOTE 1 (E:10/2/2005) | | | ULS | ULSCT | 7.94 | 47.44 | 19.31 | 20.67 | 12.74 | | | | | | |
| | **LINE SPLITTING** | | | | | | | | | | | | | | | |
| | **END USER ORDERING-CENTRAL OFFICE BASED** | | | | | | | | | | | | | | | |
| | Line Splitting - per line activation DLEC owned splitter | | | UEPSR UEPSB | UREOS | 0.61 | | | | | | | | | | |
| | Line Splitting - per line activation BST owned - physical | | | UEPSR UEPSB | UREBP | 0.61 | 37.02 | 21.20 | 21.10 | 9.87 | | | | | | |
| | Line Splitting - per line activation BST owned - virtual | | | UEPSR UEPSB | UREBV | 0.61 | 37.02 | 21.20 | 21.10 | 9.87 | | | | | | |
| | **MAINTENANCE** | | | | | | | | | | | | | | | |
| | No Trouble Found - per 1/2 hour increments - Basic | | | | | | 80.00 | 55.00 | | | | | | | | |
| | No Trouble Found - per 1/2 hour increments - Overtime | | | | | | 120.00 | 82.50 | | | | | | | | |
| | No Trouble Found - per 1/2 hour increments - Premium | | | | | | 160.00 | 110.00 | | | | | | | | |
| **UNBUNDLED DEDICATED TRANSPORT** | | | | | | | | | | | | | | | | |
| | **INTEROFFICE CHANNEL - DEDICATED TRANSPORT** | | | | | | | | | | | | | | | |
| | Interoffice Channel - Dedicated Transport - 2-Wire Voice Grade - Per Mile per month | | | U1TVX | 1L5XX | 0.01 | | | | | | | | | | |
| | Interoffice Channel - Dedicated Transport- 2- Wire Voice Grade - Facility Termination | | | U1TVX | U1TV2 | 29.11 | 47.34 | 31.78 | 22.77 | 8.75 | | | | | | |
| | Interoffice Channel - Dedicated Transpor t- 2-Wire Voice Grade Rev Bat. - Per Mile per month | | | U1TVX | 1L5XX | 0.01 | | | | | | | | | | |
| | Interoffice Channel - Dedicated Transport- 2- Wire VG Rev Bat. - Facility Termination | | | U1TVX | U1TR2 | 29.11 | 47.34 | 31.78 | 22.77 | 8.75 | | | | | | |
| | Interoffice Channel - Dedicated Transport - 4-Wire Voice Grade - Per Mile per month | | | U1TVX | 1L5XX | 0.01 | | | | | | | | | | |
| | Interoffice Channel - Dedicated Transport - 4- Wire Voice Grade - Facility Termination | | | U1TVX | U1TV4 | 25.86 | 47.34 | 31.78 | 22.77 | 8.75 | | | | | | |
| | Interoffice Channel - Dedicated Transport - 56 kbps - per mile per month | | | U1TDX | 1L5XX | 0.0115 | | | | | | | | | | |
| | Interoffice Channel - Dedicated Transport - 56 kbps - Facility Termination | | | U1TDX | U1TD5 | 20.97 | 47.35 | 31.78 | 22.77 | 8.75 | | | | | | |
| | Interoffice Channel - Dedicated Transport - 64 kbps - per mile per month | | | U1TDX | 1L5XX | 0.0115 | | | | | | | | | | |
| | Interoffice Channel - Dedicated Transport - 64 kbps - Facility Termination | | | U1TDX | U1TD6 | 20.97 | 47.35 | 31.78 | 22.77 | 8.75 | | | | | | |
| | Interoffice Channel - Dedicated Channel - DS1 - Per Mile per month | | | U1TD1 | 1L5XX | 0.23 | | | | | | | | | | |
| | Interoffice Channel - Dedicated Tranport - DS1 - Facility Termination | | | U1TD1 | U1TF1 | 96.04 | 105.52 | 98.46 | 23.09 | 20.49 | | | | | | |
| | Interoffice Channel - Dedicated Transport - DS3 - Per Mile per month | | | U1TD3 | 1L5XX | 4.97 | | | | | | | | | | |
| | Interoffice Channel - Dedicated Transport - DS3 - Facility Termination per month | | | U1TD3 | U1TF3 | 1,175.15 | 335.40 | 219.24 | 89.57 | 87.75 | | | | | | |
| | Interoffice Channel - Dedicated Transport - STS-1 - Per Mile per month | | | U1TS1 | 1L5XX | 4.97 | | | | | | | | | | |
| | Interoffice Channel - Dedicated Transport - STS-1 - Facility Termination | | | U1TS1 | U1TFS | 1,149.51 | 335.40 | 219.24 | 89.57 | 87.75 | | | | | | |
| **DARK FIBER** | | | | | | | | | | | | | | | | |
| | Dark Fiber, Four Fiber Strands, Per Route Mile or Fraction Thereof per month - Interoffice Channel | | | UDF, UDFCX | 1L5DF | 30.74 | | | | | | | | | | |
| | NRC Dark Fiber - Interoffice Channel | | | UDF, UDFCX | UDF14 | | 732.53 | 192.67 | 377.27 | 241.67 | | | | | | |
| | Dark Fiber, Four Fiber Strands, Per Route Mile or Fraction Thereof per month - Local Loop | | | UDF, UDFCX | 1L5DL | 47.01 | | | | | | | | | | |
| | NRC Dark Fiber - Local Loop | | | UDF, UDFCX | UDFL4 | | 732.53 | 192.67 | 377.27 | 241.67 | | | | | | |

| UNBUNDLED NETWORK ELEMENTS - Kentucky | | | | | | | | | | | | | Attachment: 2 | | Exhibit: A | |
|---|---|---|---|---|---|---|---|---|---|---|---|---|---|---|---|---|
| CATEGORY | RATE ELEMENTS | Interim | Zone | BCS | USOC | RATES ($) | | | | | Svc Order Submitted Elec per LSR | Svc Order Submitted Manually per LSR | Incremental Charge - Manual Svc Order vs. Electronic-1st | Incremental Charge - Manual Svc Order vs. Electronic-Add'l | Incremental Charge - Manual Svc Order vs. Electronic-Disc 1st | Incremental Charge - Manual Svc Order vs. Electronic-Disc Add'l |
| | | | | | | Rec | Nonrecurring | | Nonrecurring Disconnect | | OSS Rates ($) | | | | | |
| | | | | | | | First | Add'l | First | Add'l | SOMEC | SOMAN | SOMAN | SOMAN | SOMAN | SOMAN |
| 8XX ACCESS TEN DIGIT SCREENING | | | | | | | | | | | | | | | | |
| | 8XX Access Ten Digit Screening, Per Call | | | OHD | | 0.0006478 | | | | | | | | | | |
| | 8XX Access Ten Digit Screening, Reservation Charge Per 8XX Number Reserved | | | OHD | N8R1X | | 4.14 | 0.70 | | | | | | | | |
| | 8XX Access Ten Digit Screening, Per 8XX No. Established W/O POTS Translations | | | OHD | | | 8.78 | 1.18 | 7.08 | 0.86 | | | | | | |
| | 8XX Access Ten Digit Screening, Per 8XX No. Established With POTS Translations | | | OHD | N8FTX | | 8.78 | 1.18 | 7.08 | 0.86 | | | | | | |
| | 8XX Access Ten Digit Screening, Customized Area of Service Per 8XX Number | | | OHD | N8FCX | | 4.14 | 2.07 | | | | | | | | |
| | 8XX Access Ten Digit Screening, Multiple InterLATA CXR Routing Per CXR Requested Per 8XX No. | | | OHD | N8FMX | | 4.85 | 2.78 | | | | | | | | |
| | 8XX Access Ten Digit Screening, Change Charge Per Request | | | OHD | N8FAX | | 4.85 | 0.70 | | | | | | | | |
| | 8XX Access Ten Digit Screening, Call Handling and Destination Features | | | OHD | N8FDX | | 4.14 | 4.14 | | | | | | | | |
| | 8XX Access Ten Digit Screening w/ 8FL No. Delivery, | | | OHD | | 0.0006478 | | | | | | | | | | |
| | 8XX Access Ten Digit Screening, w/ POTS No. Delivery, | | | OHD | | 0.0006478 | | | | | | | | | | |
| LINE INFORMATION DATA BASE ACCESS (LIDB) | | | | | | | | | | | | | | | | |
| | LIDB Common Transport Per Query | | | OQT | | 0.000023 | | | | | | | | | | |
| | LIDB Validation Per Query | | | OQU | | 0.0137322 | | | | | | | | | | |
| | LIDB Originating Point Code Establishment or Change | | | OQT, OQU | NRBPX | | 55.12 | | 67.59 | | | | | | | |
| SIGNALING (CCS7) | | | | | | | | | | | | | | | | |
| | CCS7 Signaling Connection, Per 56 Kbps Facility | | | UDB | TPP++ | 20.71 | 43.56 | 43.56 | 22.45 | 22.45 | | | | | | |
| | CCS7 Signaling Termination, Per STP Port | | | UDB | PT8SX | 151.39 | | | | | | | | | | |
| | CCS7 Signaling Usage, Per TCAP Message | | | UDB | | 0.0000656 | | | | | | | | | | |
| | CCS7 Signaling Connection, Per link (A link) | | | UDB | TPP++ | 20.71 | 43.56 | 43.56 | 22.45 | 22.45 | | | | | | |
| | CCS7 Signaling Connection, Per link (B link) (also known as D link) | | | UDB | TPP++ | 20.71 | 43.56 | 43.56 | 22.45 | 22.45 | | | | | | |
| | CCS7 Signaling Usage, Per ISUP Message | | | UDB | | 0.0000164 | | | | | | | | | | |
| | CCS7 Signaling Usage Surrogate, per link per LATA | | | UDB | STU56 | 751.08 | | | | | | | | | | |
| | CCS7 Signaling Point Code, per Originating Point Code Establishment or Change, per STP affected | | | UDB | CCAPO | | 46.02 | 46.02 | 56.43 | 56.43 | | | | | | |
| | CCS7 Signaling Point Code, per Destination Point Code Establishment or Change, Per Stp Affected | | | UDB | CCAPD | | 46.02 | 46.02 | 56.43 | 56.43 | | | | | | |
| E911 SERVICE | | | | | | | | | | | | | | | | |
| | Local Channel - Dedicated - 2-wr Voice Grade | | | | | 18.57 | 265.78 | 46.96 | 46.79 | 4.98 | | | | | | |
| | Interoffice Transport - Dedicated - 2-wr Voice Grade Per Mile | | | | | 0.0115 | | | | | | | | | | |
| | Interoffice Transport - Dedicated - 2-wr Voice Grade Per Facility Termination | | | | | 29.11 | 47.34 | 31.78 | 22.77 | 8.75 | | | | | | |
| | Local Channel - Dedicated - DS1 - Zone 1 | | | | | 40.46 | 209.60 | 176.51 | 30.21 | 21.07 | | | | | | |
| | Local Channel - Dedicated - DS1 - Zone 2 | | | | | 43.39 | 209.60 | 176.51 | 30.21 | 21.07 | | | | | | |
| | Local Channel - Dedicated - DS1 - Zone 3 | | | | | 164.50 | 209.60 | 176.51 | 30.21 | 21.07 | | | | | | |
| | Interoffice Transport - Dedicated - DS1 Per Mile | | | | | 0.23 | | | | | | | | | | |
| | Interoffice Transport - Dedicated - DS1 Per Facility Termination | | | | | 96.04 | 105.52 | 98.46 | 23.09 | 20.49 | | | | | | |
| CALLING NAME (CNAM) SERVICE | | | | | | | | | | | | | | | | |
| | CNAM For DB Owners - Service Establishment | | | OQV | | | 25.34 | 25.34 | 23.30 | 23.30 | | | | | | |
| | CNAM For Non DB Owners - Service Establishment | | | OQV | | | 25.34 | 25.34 | 23.30 | 23.30 | | | | | | |
| | CNAM For DB Owners - Service Provisioning With Point Code Establishment | | | OQV | | | 1,591.54 | 1,177.08 | 431.95 | 317.61 | | | | | | |
| | CNAM For Non DB Owners - Service Provisioning With Point Code Establishment | | | OQV | | | 546.40 | 393.74 | 438.93 | 317.61 | | | | | | |
| | CNAM for DB Owners, Per Query | | | OQV | | 0.0010348 | | | | | | | | | | |
| | CNAM for Non DB Owners, Per Query | | | OQV | | 0.0010348 | | | | | | | | | | |
| | CNAM (Non-Databs Owner), NRC, applies when using the Character Based User Interface (CHUI) | | | OQV | CDDCH | | 595.00 | 595.00 | | | | | | | | |
| SELECTIVE ROUTING | | | | | | | | | | | | | | | | |
| | Selective Routing Per Unique Line Class Code Per Request Per Switch | | | | | | 93.53 | 93.53 | 15.58 | 15.58 | | | | | | |

| UNBUNDLED NETWORK ELEMENTS - Kentucky | | | | | | | | | | | | | | Attachment: 2 | | Exhibit: A | |
|---|---|---|---|---|---|---|---|---|---|---|---|---|---|---|---|---|---|
| CATEGORY | RATE ELEMENTS | Interim | Zone | BCS | USOC | RATES ($) | | | | | Svc Order Submitted Elec per LSR | Svc Order Submitted Manually per LSR | Incremental Charge - Manual Svc Order vs. Electronic-1st | Incremental Charge - Manual Svc Order vs. Electronic-Add'l | Incremental Charge - Manual Svc Order vs. Electronic-Disc 1st | Incremental Charge - Manual Svc Order vs. Electronic-Disc Add'l |
| | | | | | | Rec | Nonrecurring | | Nonrecurring Disconnect | | OSS Rates ($) | | | | | |
| | | | | | | | First | Add'l | First | Add'l | SOMEC | SOMAN | SOMAN | SOMAN | SOMAN | SOMAN |
| VIRTUAL COLLOCATION | | | | | | | | | | | | | | | | |
| | Virtual Collocation-2 Wire Cross Connects (Loop) for Line Splitting | | | UEPSR UEPSB | VE1LS | 0.0309 | 24.68 | 23.68 | 12.14 | 10.95 | | | | | | |
| PHYSICAL COLLOCATION | | | | | | | | | | | | | | | | |
| | Physical Collocation-2 Wire Cross Connects (Loop) for Line Splitting | | | UEPSR UEPSB | PE1LS | 0.0333 | 24.68 | 23.68 | 12.14 | 10.95 | | | | | | |
| AIN SELECTIVE CARRIER ROUTING | | | | | | | | | | | | | | | | |
| | Regional Service Establishment | | | SRC | SRCEC | | 193,401.00 | 193,401.00 | 9,483.34 | 9,483.34 | | | | | | |
| | End Office Establishment | | | SRC | SRCEO | | 194.09 | 194.09 | 0.85 | 0.85 | | | | | | |
| | Line/Port NRC, per end user | | | SRC | SRCLP | | 2.06 | 2.06 | | | | | | | | |
| | Query NRC, per query | | | SRC | | 0.0037502 | | | | | | | | | | |
| AIN - BELLSOUTH AIN SMS ACCESS SERVICE | | | | | | | | | | | | | | | | |
| | AIN SMS Access Service - Service Establishment, Per State, Initial Setup | | | A1N | CAMSE | | 43.55 | 43.55 | 44.93 | 44.93 | | | | | | |
| | AIN SMS Access Service - Port Connection - Dial/Shared Access | | | A1N | CAMDP | | 8.64 | 8.64 | 10.03 | 10.03 | | | | | | |
| | AIN SMS Access Service - Port Connection - ISDN Access | | | A1N | CAM1P | | 8.64 | 8.64 | 10.03 | 10.03 | | | | | | |
| | AIN SMS Access Service - User Identification Codes - Per User ID Code | | | A1N | CAMAU | | 38.65 | 38.65 | 29.88 | 29.88 | | | | | | |
| | AIN SMS Access Service - Security Card, Per User ID Code, Initial or Replacement | | | A1N | CAMRC | | 75.08 | 75.08 | 12.93 | 12.93 | | | | | | |
| | AIN SMS Access Service - Storage, Per Unit (100 Kilobytes) | | | | | 0.0025 | | | | | | | | | | |
| | AIN SMS Access Service - Session, Per Minute | | | | | 0.666 | | | | | | | | | | |
| | AIN SMS Access Service - Company Performed Session, Per Minute | | | | | 0.4608 | | | | | | | | | | |
| AIN - BELLSOUTH AIN TOOLKIT SERVICE | | | | | | | | | | | | | | | | |
| | AIN Toolkit Service - Service Establishment Charge, Per State, Initial Setup | | | CAM | BAPSC | | 43.55 | 43.55 | 44.93 | 44.93 | | | | | | |
| | AIN Toolkit Service - Training Session, Per Customer | | | | BAPVX | | 8,436.93 | 8,436.93 | | | | | | | | |
| | AIN Toolkit Service - Trigger Access Charge, Per Trigger, Per DN, Term. Attempt | | | | BAPTT | | 8.64 | 8.64 | 10.03 | 10.03 | | | | | | |
| | AIN Toolkit Service - Trigger Access Charge, Per Trigger, Per DN, Off-Hook Delay | | | | BAPTD | | 8.64 | 8.64 | 10.03 | 10.03 | | | | | | |
| | AIN Toolkit Service - Trigger Access Charge, Per Trigger, Per DN, Off-Hook Immediate | | | | BAPTM | | 8.64 | 8.64 | 10.03 | 10.03 | | | | | | |
| | AIN Toolkit Service - Trigger Access Charge, Per Trigger, Per DN, 10-Digit PODP | | | | BAPTO | | 51.01 | 51.01 | 18.50 | 18.50 | | | | | | |
| | AIN Toolkit Service - Trigger Access Charge, Per Trigger, Per DN, CDP | | | | BAPTC | | 51.01 | 51.01 | 18.50 | 18.50 | | | | | | |
| | AIN Toolkit Service - Trigger Access Charge, Per Trigger, Per DN, Feature Code | | | | BAPTF | | 51.01 | 51.01 | 18.50 | 18.50 | | | | | | |
| | AIN Toolkit Service - Query Charge, Per Query | | | | | 0.0549207 | | | | | | | | | | |
| | AIN Toolkit Service - Type 1 Node Charge, Per AIN Toolkit Subscription, Per Node, Per Query | | | | | 0.0066492 | | | | | | | | | | |
| | AIN Toolkit Service - SCP Storage Charge, Per SMS Access Account, Per 100 Kilobytes | | | | | 0.07 | | | | | | | | | | |
| | AIN Toolkit Service - Monthly report - Per AIN Toolkit Service Subscription | | | CAM | BAPMS | 7.87 | 8.64 | 8.64 | 6.08 | 6.08 | | | | | | |
| | AIN Toolkit Service - Special Study - Per AIN Toolkit Service Subscription | | | CAM | BAPLS | 3.26 | 9.56 | 9.56 | | | | | | | | |
| | AIN Toolkit Service - Call Event Report - Per AIN Toolkit Service Subscription | | | CAM | BAPDS | 4.72 | 8.64 | 8.64 | 6.08 | 6.08 | | | | | | |
| | AIN Toolkit Service - Call Event Special Study - Per AIN Toolkit Service Subscription | | | CAM | BAPES | 0.11 | 9.56 | 9.56 | | | | | | | | |
| ENHANCED EXTENDED LINK (EELs) | | | | | | | | | | | | | | | | |
| | NOTE: The monthly recurring and non-recurring charges below will apply and the Switch-As-Is Charge will not apply for UNE combinations provisioned as ' Ordinarily Combined' Network Elements. | | | | | | | | | | | | | | | |
| | NOTE: The monthly recurring and the Switch-As-Is Charge and not the non-recurring charges below will apply for UNE combinations provisioned as ' Currently Combined' Network Elements. | | | | | | | | | | | | | | | |
| | EXTENTED 2-WIRE VOICE GRADE EXTENDED LOOP WITH DEDICATED DS1 INTEROFFICE TRANSPORT | | | | | | | | | | | | | | | |
| | First 2-Wire VG Loop (SL2) in Combination - Zone 1 | | 1 | UNCVX | UEAL2 | 12.67 | 125.22 | 60.48 | 59.69 | 7.84 | | | | | | |

| UNBUNDLED NETWORK ELEMENTS - Kentucky | | | | | | | | | | | | | | Attachment: 2 | | Exhibit: A | |
|---|---|---|---|---|---|---|---|---|---|---|---|---|---|---|---|---|---|
| CATEGORY | RATE ELEMENTS | Interim | Zone | BCS | USOC | RATES ($) | | | | | Svc Order Submitted Elec per LSR | Svc Order Submitted Manually per LSR | Incremental Charge - Manual Svc Order vs. Electronic-1st | Incremental Charge - Manual Svc Order vs. Electronic-Add'l | Incremental Charge - Manual Svc Order vs. Electronic-Disc 1st | Incremental Charge - Manual Svc Order vs. Electronic-Disc Add'l |
| | | | | | | Rec | Nonrecurring | | Nonrecurring Disconnect | | OSS Rates ($) | | | | | |
| | | | | | | | First | Add'l | First | Add'l | SOMEC | SOMAN | SOMAN | SOMAN | SOMAN | SOMAN |
| | First 2-Wire VG Loop (SL2) in Combination - Zone 2 | | 2 | UNCVX | UEAL2 | 17.45 | 125.22 | 60.48 | 59.69 | 7.84 | | | | | | |
| | First 2-Wire VG Loop (SL2) in Combination - Zone 3 | | 3 | UNCVX | UEAL2 | 33.22 | 125.22 | 60.48 | 59.69 | 7.84 | | | | | | |
| | Interoffice Transport - Dedicated - DS1 combination - Per Mile per month | | | UNC1X | 1L5XX | 0.19 | | | | | | | | | | |
| | Interoffice Transport - Dedicated - DS1 combination - Facility Termination per month | | | UNC1X | U1TF1 | 79.02 | 181.24 | 123.53 | 56.72 | 22.32 | | | | | | |
| | 1/0 Channelization System in combination Per Month | | | UNC1X | MQ1 | 113.33 | 57.26 | 14.74 | 1.86 | 1.67 | | | | | | |
| | Voice Grade COCI - Per Month | | | UNCVX | 1D1VG | 0.62 | 6.71 | 4.84 | | | | | | | | |
| | Each Additional 2-Wire VG Loop (SL 2) in Combination - Zone 1 | | 1 | UNCVX | UEAL2 | 12.67 | 125.22 | 60.48 | 59.69 | 7.84 | | | | | | |
| | Each Additional 2-Wire VG Loop (SL 2) in Combination - Zone 2 | | 2 | UNCVX | UEAL2 | 17.45 | 125.22 | 60.48 | 59.69 | 7.84 | | | | | | |
| | Each Additional 2-Wire VG Loop (SL 2) in Combination - Zone 3 | | 3 | UNCVX | UEAL2 | 33.22 | 125.22 | 60.48 | 59.69 | 7.84 | | | | | | |
| | Voice Grade COCI - Per Month | | | UNCVX | 1D1VG | 0.62 | 6.71 | 4.84 | | | | | | | | |
| | Nonrecurring Currently Combined Network Elements Switch -As-Is Charge | | | UNC1X | UNCCC | | 8.98 | 8.98 | 11.17 | 11.17 | | | | | | |
| | **EXTENDED 4-WIRE VOICE GRADE EXTENDED LOOP WITH DEDICATED DS1 INTEROFFICE TRANSPORT** | | | | | | | | | | | | | | | |
| | First 4-Wire Analog Voice Grade Loop in Combination - Zone 1 | | 1 | UNCVX | UEAL4 | 29.26 | 125.22 | 60.48 | 59.69 | 7.84 | | | | | | |
| | First 4-Wire Analog Voice Grade Loop in Combination - Zone 2 | | 2 | UNCVX | UEAL4 | 34.25 | 125.22 | 60.48 | 59.69 | 7.84 | | | | | | |
| | First 4-Wire Analog Voice Grade Loop in Combination - Zone 3 | | 3 | UNCVX | UEAL4 | 85.06 | 125.22 | 60.48 | 59.69 | 7.84 | | | | | | |
| | Interoffice Transport - Dedicated - DS1 combination - Per Mile Per Month | | | UNC1X | 1L5XX | 0.19 | | | | | | | | | | |
| | Interoffice Transport - Dedicated - DS1 - Facility Termination Per Month | | | UNC1X | U1TF1 | 79.02 | 181.24 | 123.53 | 56.72 | 22.32 | | | | | | |
| | 1/0 Channel System in combination Per Month | | | UNC1X | MQ1 | 113.33 | 57.26 | 14.74 | 1.86 | 1.67 | | | | | | |
| | Voice Grade COCI in combination - per month | | | UNCVX | 1D1VG | 0.62 | 6.71 | 4.84 | | | | | | | | |
| | Additional 4-Wire Analog Voice Grade Loop in same DS1 Interoffice Transport Combination - Zone 1 | | 1 | UNCVX | UEAL4 | 29.26 | 125.22 | 60.48 | 59.69 | 7.84 | | | | | | |
| | Additional 4-Wire Analog Voice Grade Loop in same DS1 Interoffice Transport Combination - Zone 2 | | 2 | UNCVX | UEAL4 | 34.25 | 125.22 | 60.48 | 59.69 | 7.84 | | | | | | |
| | Additional 4-Wire Analog Voice Grade Loop in same DS1 Interoffice Transport Combination - Zone 3 | | 3 | UNCVX | UEAL4 | 85.06 | 125.22 | 60.48 | 59.69 | 7.84 | | | | | | |
| | Additional Voice Grade COCI in combination - per month | | | UNCVX | 1D1VG | 0.62 | 6.71 | 4.84 | | | | | | | | |
| | Nonrecurring Currently Combined Network Elements Switch -As-Is Charge | | | UNC1X | UNCCC | | 8.98 | 8.98 | 11.17 | 11.17 | | | | | | |
| | **EXTENDED 4-WIRE 56 KBPS EXTENDED DIGITAL LOOP WITH DEDICATED DS1 INTEROFFICE TRANSPORT** | | | | | | | | | | | | | | | |
| | First 4-Wire 56Kbps Digital Grade Loop in Combination - Zone 1 | | 1 | UNCDX | UDL56 | 27.59 | 125.22 | 60.48 | 59.69 | 7.84 | | | | | | |
| | First 4-Wire 56Kbps Digital Grade Loop in Combination - Zone 2 | | 2 | UNCDX | UDL56 | 32.48 | 125.22 | 60.48 | 59.69 | 7.84 | | | | | | |
| | First 4-Wire 56Kbps Digital Grade Loop in Combination - Zone 3 | | 3 | UNCDX | UDL56 | 36.37 | 125.22 | 60.48 | 59.69 | 7.84 | | | | | | |
| | Interoffice Transport - Dedicated - DS1 combination - Per Mile Per Month | | | UNC1X | 1L5XX | 0.19 | | | | | | | | | | |
| | Interoffice Transport - Dedicated - DS1 - combination Facility Termination Per Month | | | UNC1X | U1TF1 | 79.02 | 181.24 | 123.53 | 56.72 | 22.32 | | | | | | |
| | 1/0 Channel System in combination Per Month | | | UNC1X | MQ1 | 113.33 | 57.26 | 14.74 | 1.86 | 1.67 | | | | | | |
| | OCU-DP COCI (data) per month (2.4-64kbs) | | | UNCDX | 1D1DD | 1.32 | 6.71 | 4.84 | | | | | | | | |
| | Additional 4-Wire 56Kbps Digital Grade Loop in same DS1 Interoffice Transport Combination - Zone 1 | | 1 | UNCDX | UDL56 | 27.59 | 125.22 | 60.48 | 59.69 | 7.84 | | | | | | |
| | Additional 4-Wire 56Kbps Digital Grade Loop in same DS1 Interoffice Transport Combination - Zone 2 | | 2 | UNCDX | UDL56 | 32.48 | 125.22 | 60.48 | 59.69 | 7.84 | | | | | | |
| | Additional 4-Wire 56Kbps Digital Grade Loop in same DS1 Interoffice Transport Combination - Zone 3 | | 3 | UNCDX | UDL56 | 36.37 | 125.22 | 60.48 | 59.69 | 7.84 | | | | | | |

| UNBUNDLED NETWORK ELEMENTS - Kentucky | | | | | | | | | | | | | | Attachment: 2 | | Exhibit: A | |
|---|---|---|---|---|---|---|---|---|---|---|---|---|---|---|---|---|---|
| CATEGORY | RATE ELEMENTS | Interim | Zone | BCS | USOC | RATES ($) | | | | | Svc Order Submitted Elec per LSR | Svc Order Submitted Manually per LSR | Incremental Charge - Manual Svc Order vs. Electronic-1st | Incremental Charge - Manual Svc Order vs. Electronic-Add'l | Incremental Charge - Manual Svc Order vs. Electronic-Disc 1st | Incremental Charge - Manual Svc Order vs. Electronic-Disc Add'l |
| | | | | | | Rec | Nonrecurring | | Nonrecurring Disconnect | | OSS Rates ($) | | | | | |
| | | | | | | | First | Add'l | First | Add'l | SOMEC | SOMAN | SOMAN | SOMAN | SOMAN | SOMAN |
| | Additional OCU-DP COCI (data) - in combination per month (2.4-64kbs) | | | UNCDX | 1D1DD | 1.32 | 6.71 | 4.84 | | | | | | | | |
| | Nonrecurring Currently Combined Network Elements Switch -As-Is Charge | | | UNC1X | UNCCC | | 8.98 | 8.98 | 11.17 | 11.17 | | | | | | |
| | **EXTENDED 4-WIRE 64 KBPS EXTENDED DIGITAL LOOP WITH DEDICATED DS1 INTEROFFICE TRANSPORT** | | | | | | | | | | | | | | | |
| | First 4-Wire 64Kbps Digital Grade Loop in Combination - Zone 1 | | 1 | UNCDX | UDL64 | 27.59 | 125.22 | 60.48 | 59.69 | 7.84 | | | | | | |
| | First 4-Wire 64Kbps Digital Grade Loop in Combination - Zone 2 | | 2 | UNCDX | UDL64 | 32.48 | 125.22 | 60.48 | 59.69 | 7.84 | | | | | | |
| | First 4-Wire 64Kbps Digital Grade Loop in Combination - Zone 3 | | 3 | UNCDX | UDL64 | 36.37 | 125.22 | 60.48 | 59.69 | 7.84 | | | | | | |
| | Interoffice Transport - Dedicated - DS1 combination - Per Mile Per Month | | | UNC1X | 1L5XX | 0.19 | | | | | | | | | | |
| | interoffice Transport - Dedicated - DS1 combination - Facility Termination Per Month | | | UNC1X | U1TF1 | 79.02 | 181.24 | 123.53 | 56.72 | 22.32 | | | | | | |
| | 1/0 Channel System in combination Per Month | | | UNC1X | MQ1 | 113.33 | 57.26 | 14.74 | 1.86 | 1.67 | | | | | | |
| | OCU-DP COCI (data) - in combination - per month (2.4-64kbs) | | | UNCDX | 1D1DD | 1.32 | 6.71 | 4.84 | | | | | | | | |
| | Additional 4-Wire 64Kbps Digital Grade Loop in same DS1 Interoffice Transport Combination - Zone 1 | | 1 | UNCDX | UDL64 | 27.59 | 125.22 | 60.48 | 59.69 | 7.84 | | | | | | |
| | Additional 4-Wire 64Kbps Digital Grade Loop in same DS1 Interoffice Transport Combination - Zone 2 | | 2 | UNCDX | UDL64 | 32.48 | 125.22 | 60.48 | 59.69 | 7.84 | | | | | | |
| | Additional 4-Wire 64Kbps Digital Grade Loop in same DS1 Interoffice Transport Combination - Zone 3 | | 3 | UNCDX | UDL64 | 36.37 | 125.22 | 60.48 | 59.69 | 7.84 | | | | | | |
| | Additional OCU-DP COCI (data) - in combination - per month (2.4-64kbs) | | | UNCDX | 1D1DD | 1.32 | 6.71 | 4.84 | | | | | | | | |
| | Nonrecurring Currently Combined Network Elements Switch -As-Is Charge | | | UNC1X | UNCCC | | 8.98 | 8.98 | 11.17 | 11.17 | | | | | | |
| | **EXTENDED 4-WIRE DS1 DIGITAL EXTENDED LOOP WITH DEDICATED DS1 INTEROFFICE TRANSPORT** | | | | | | | | | | | | | | | |
| | 4-Wire DS1 Digital Loop in Combination - Zone 1 | | 1 | UNC1X | USLXX | 86.47 | 210.70 | 114.60 | 63.96 | 17.97 | | | | | | |
| | 4-Wire DS1 Digital Loop in Combination - Zone 2 | | 2 | UNC1X | USLXX | 114.10 | 210.70 | 114.60 | 63.96 | 17.97 | | | | | | |
| | 4-Wire DS1 Digital Loop in Combination - Zone 3 | | 3 | UNC1X | USLXX | 297.76 | 210.70 | 114.60 | 63.96 | 17.97 | | | | | | |
| | Interoffice Transport - Dedicated - DS1 combination - Per Mile Per Month | | | UNC1X | 1L5XX | 0.19 | | | | | | | | | | |
| | Interoffice Transport - Dedicated - DS1 combination - Facility Termination Per Month | | | UNC1X | U1TF1 | 79.02 | 181.24 | 123.53 | 56.72 | 22.32 | | | | | | |
| | Nonrecurring Currently Combined Network Elements Switch -As-Is Charge | | | UNC1X | UNCCC | | 8.98 | 8.98 | 11.17 | 11.17 | | | | | | |
| | **EXTENDED 4-WIRE DS1 DIGITAL EXTENDED LOOP WITH DEDICATED DS3 INTEROFFICE TRANSPORT** | | | | | | | | | | | | | | | |
| | First DS1Loop in Combination - Zone 1 | | 1 | UNC1X | USLXX | 86.47 | 210.70 | 114.60 | 63.96 | 17.97 | | | | | | |
| | First DS1Loop in Combination - Zone 2 | | 2 | UNC1X | USLXX | 114.10 | 210.70 | 114.60 | 63.96 | 17.97 | | | | | | |
| | First DS1Loop in Combination - Zone 3 | | 3 | UNC1X | USLXX | 297.76 | 210.70 | 114.60 | 63.96 | 17.97 | | | | | | |
| | Interoffice Transport - Dedicated - DS3 combination - Per Mile Per Month | | | UNC3X | 1L5XX | 4.09 | | | | | | | | | | |
| | Interoffice Transport - Dedicated - DS3 - Facility Termination per month | | | UNC3X | U1TF3 | 966.89 | 350.56 | 141.58 | 48.00 | 23.39 | | | | | | |
| | 3/1Channel System in combination per month | | | UNC3X | MQ3 | 158.20 | 115.48 | 56.53 | 15.12 | 5.30 | | | | | | |
| | DS1 COCI in combination per month | | | UNC1X | UC1D1 | 11.80 | 6.71 | 4.84 | | | | | | | | |
| | Additional DS1Loop in DS3 Interoffice Transport Combination - Zone 1 | | 1 | UNC1X | USLXX | 86.47 | 210.70 | 114.60 | 63.96 | 17.97 | | | | | | |
| | Additional DS1Loop in DS3 Interoffice Transport Combination - Zone 2 | | 2 | UNC1X | USLXX | 114.10 | 210.70 | 114.60 | 63.96 | 17.97 | | | | | | |
| | Additional DS1Loop in DS3 Interoffice Transport Combination - Zone 3 | | 3 | UNC1X | USLXX | 297.76 | 210.70 | 114.60 | 63.96 | 17.97 | | | | | | |
| | Additoinal DS1 COCI in combination per month | | | UNC1X | UC1D1 | 11.80 | 6.71 | 4.84 | | | | | | | | |
| | Nonrecurring Currently Combined Network Elements Switch -As-Is Charge | | | UNC3X | UNCCC | | 8.98 | 8.98 | 11.17 | 11.17 | | | | | | |
| | **EXTENDED 2-WIRE VOICE GRADE EXTENDED LOOP/ 2 WIRE VOICE GRADE INTEROFFICE TRANSPORT** | | | | | | | | | | | | | | | |
| | 2-WireVG Loop in combination - Zone 1 | | 1 | UNCVX | UEAL2 | 12.67 | 125.22 | 60.48 | 59.69 | 7.84 | | | | | | |
| | 2-WireVG Loop in combination - Zone 2 | | 2 | UNCVX | UEAL2 | 17.45 | 125.22 | 60.48 | 59.69 | 7.84 | | | | | | |

| UNBUNDLED NETWORK ELEMENTS - Kentucky | | | | | | | | | | | | | | Attachment: 2 | | Exhibit: A | |
|---|---|---|---|---|---|---|---|---|---|---|---|---|---|---|---|---|---|
| CATEGORY | | RATE ELEMENTS | Interim | Zone | BCS | USOC | RATES ($) | | | | | Svc Order Submitted Elec per LSR | Svc Order Submitted Manually per LSR | Incremental Charge - Manual Svc Order vs. Electronic-1st | Incremental Charge - Manual Svc Order vs. Electronic-Add'l | Incremental Charge - Manual Svc Order vs. Electronic-Disc 1st | Incremental Charge - Manual Svc Order vs. Electronic-Disc Add'l |
| | | | | | | | Rec | Nonrecurring | | Nonrecurring Disconnect | | OSS Rates ($) | | | | | |
| | | | | | | | | First | Add'l | First | Add'l | SOMEC | SOMAN | SOMAN | SOMAN | SOMAN | SOMAN |
| | | 2-WireVG Loop in combination - Zone 3 | | 3 | UNCVX | UEAL2 | 33.22 | 125.22 | 60.48 | 59.69 | 7.84 | | | | | | |
| | | Interoffice Transport - 2-wire VG - Dedicated- Per Mile Per Month | | | UNCVX | 1L5XX | 0.01 | | | | | | | | | | |
| | | Interoffice Transport - 2-wire VG - Dedicated - Facility Termination per month | | | UNCVX | U1TV2 | 23.95 | 98.09 | 53.67 | 56.31 | 22.42 | | | | | | |
| | | Nonrecurring Currently Combined Network Elements Switch -As-Is Charge | | | UNCVX | UNCCC | | 8.98 | 8.98 | 11.17 | 11.17 | | | | | | |
| | | **EXTENDED 4-WIRE VOICE GRADE EXTENDED LOOP/ 4 WIRE VOICE GRADE INTEROFFICE TRANSPORT** | | | | | | | | | | | | | | | |
| | | 4-WireVG Loop in combination - Zone 1 | | 1 | UNCVX | UEAL4 | 29.26 | 125.22 | 60.48 | 59.69 | 7.84 | | | | | | |
| | | 4-WireVG Loop in combination - Zone 2 | | 2 | UNCVX | UEAL4 | 34.25 | 125.22 | 60.48 | 59.69 | 7.84 | | | | | | |
| | | 4-WireVG Loop in combination - Zone 3 | | 3 | UNCVX | UEAL4 | 85.06 | 125.22 | 60.48 | 59.69 | 7.84 | | | | | | |
| | | Interoffice Transport - 4-wire VG - Dedicated - Per Mile Per Month | | | UNCVX | 1L5XX | 0.01 | | | | | | | | | | |
| | | Interoffice Transport - 4-wire VG - Dedicated - Facility Termination per month | | | UNCVX | U1TV4 | 21.28 | 98.09 | 53.67 | 56.31 | 22.42 | | | | | | |
| | | Nonrecurring Currently Combined Network Elements Switch -As-Is Charge | | | UNCVX | UNCCC | | 8.98 | 8.98 | 11.17 | 11.17 | | | | | | |
| | | **EXTENDED DS3 DIGITAL EXTENDED LOOP WITH DEDICATED DS3 INTEROFFICE TRANSPORT** | | | | | | | | | | | | | | | |
| | | DS3 Local Loop in combination - per mile per month | | | UNC3X | 1L5ND | 9.25 | | | | | | | | | | |
| | | DS3 Local Loop in combination - Facility Termination per month | | | UNC3X | UE3PX | 308.31 | 237.36 | 147.69 | 83.43 | 32.67 | | | | | | |
| | | Interoffice Transport - Dedicated - DS3 - Per Mile per month | | | UNC3X | 1L5XX | 4.09 | | | | | | | | | | |
| | | Interoffice Transport - Dedicated - DS3 combination - Facility Termination per month | | | UNC3X | U1TF3 | 966.89 | 350.56 | 141.58 | 48.00 | 23.39 | | | | | | |
| | | Nonrecurring Currently Combined Network Elements Switch -As-Is Charge | | | UNC3X | UNCCC | | 8.98 | 8.98 | 11.17 | 11.17 | | | | | | |
| | | **EXTENDED STS-1 DIGITAL EXTENDED LOOP WITH DEDICATED STS-1 INTEROFFICE TRANSPORT** | | | | | | | | | | | | | | | |
| | | STS-1 Local Loip in combination - per mile per month | | | UNCSX | 1L5ND | 9.25 | | | | | | | | | | |
| | | STS-1 Local Loop in combination - Facility Termination per month | | | UNCSX | UDLS1 | 320.51 | 237.36 | 147.69 | 83.43 | 32.67 | | | | | | |
| | | Interoffice Transport - Dedicated - STS-1 combination - per mile per month | | | UNCSX | 1L5XX | 4.09 | | | | | | | | | | |
| | | Interoffice Transport - Dedicated - STS-1 combination - Facility Termination per month | | | UNCSX | U1TFS | 945.79 | 350.56 | 141.58 | 48.00 | 23.39 | | | | | | |
| | | Nonrecurring Currently Combined Network Elements Switch -As-Is Charge | | | UNCSX | UNCCC | | 8.98 | 8.98 | 11.17 | 11.17 | | | | | | |
| | | **EXTENDED 2-WIRE ISDN EXTENDED LOOP WITH DS1 INTEROFFICE TRANSPORT** | | | | | | | | | | | | | | | |
| | | First 2-Wire ISDN Loop in Combination - Zone 1 | | 1 | UNCNX | U1L2X | 18.44 | 125.22 | 60.48 | 59.69 | 7.84 | | | | | | |
| | | First 2-Wire ISDN Loop in Combination - Zone 2 | | 2 | UNCNX | U1L2X | 25.08 | 125.22 | 60.48 | 59.69 | 7.84 | | | | | | |
| | | First 2-Wire ISDN Loop in Combination - Zone 3 | | 3 | UNCNX | U1L2X | 42.87 | 125.22 | 60.48 | 59.69 | 7.84 | | | | | | |
| | | Interoffice Transport - Dedicated - DS1 combination - per mile per month | | | UNC1X | 1L5XX | 0.19 | | | | | | | | | | |
| | | Interoffice Transport - Dedicated - DS1 combination - Facility Termination per month | | | UNC1X | U1TF1 | 79.02 | 181.24 | 123.53 | 56.72 | 22.32 | | | | | | |
| | | 1/0 Channel System in combination - per month | | | UNC1X | MQ1 | 113.33 | 57.26 | 14.74 | 1.86 | 1.67 | | | | | | |
| | | 2-wire ISDN COCI (BRITE) - in combination - per month | | | UNCNX | UC1CA | 2.84 | 6.71 | 4.84 | | | | | | | | |
| | | Additional 2-wire ISDN Loop in same DS1Interoffice Transport Combination - Zone 1 | | 1 | UNCNX | U1L2X | 18.44 | 125.22 | 60.48 | 59.69 | 7.84 | | | | | | |
| | | Additional 2-wire ISDN Loop in same DS1Interoffice Transport Combination - Zone 2 | | 2 | UNCNX | U1L2X | 25.08 | 125.22 | 60.48 | 59.69 | 7.84 | | | | | | |
| | | Additional 2-wire ISDN Loop in same DS1Interoffice Transport Combination - Zone 3 | | 3 | UNCNX | U1L2X | 42.87 | 125.22 | 60.48 | 59.69 | 7.84 | | | | | | |
| | | Additional 2-wire ISDN COCI (BRITE) - in combination- per month | | | UNCNX | UC1CA | 2.84 | 6.71 | 4.84 | | | | | | | | |
| | | Nonrecurring Currently Combined Network Elements Switch -As-Is Charge | | | UNC1X | UNCCC | | 8.98 | 8.98 | 11.17 | 11.17 | | | | | | |
| | | **EXTENDED 4-WIRE DS1 DIGITAL EXTENDED LOOP WITH DEDICATED STS-1 INTEROFFICE TRANSPORT** | | | | | | | | | | | | | | | |
| | | First DS1 Loop Combination - Zone 1 | | 1 | UNC1X | USLXX | 86.47 | 210.70 | 114.60 | 63.96 | 17.97 | | | | | | |
| | | First DS1 Loop Combination - Zone 2 | | 2 | UNC1X | USLXX | 114.10 | 210.70 | 114.60 | 63.96 | 17.97 | | | | | | |

## UNBUNDLED NETWORK ELEMENTS - Kentucky

| CATEGORY | | RATE ELEMENTS | Interim | Zone | BCS | USOC | RATES ($) | | | | | Svc Order Submitted Elec per LSR | Svc Order Submitted Manually per LSR | Attachment: 2 Incremental Charge - Manual Svc Order vs. Electronic-1st | Attachment: 2 Incremental Charge - Manual Svc Order vs. Electronic-Add'l | Exhibit: A Incremental Charge - Manual Svc Order vs. Electronic-Disc 1st | Exhibit: A Incremental Charge - Manual Svc Order vs. Electronic-Disc Add'l |
|---|---|---|---|---|---|---|---|---|---|---|---|---|---|---|---|---|---|
| | | | | | | | Rec | Nonrecurring | | Nonrecurring Disconnect | | OSS Rates ($) | | | | | |
| | | | | | | | | First | Add'l | First | Add'l | SOMEC | SOMAN | SOMAN | SOMAN | SOMAN | SOMAN |
| | | First DS1 Loop Combination - Zone 3 | | 3 | UNC1X | USLXX | 297.76 | 210.70 | 114.60 | 63.96 | 17.97 | | | | | | |
| | | Interoffice Transport - Dedicated - STS-1 combination - Per Mile Per Month | | | UNCSX | 1L5XX | 4.09 | | | | | | | | | | |
| | | Interoffice Transport - Dedicated - STS-1 combination - Facility Termination per month | | | UNCSX | U1TFS | 945.79 | 350.56 | 141.58 | 48.00 | 23.39 | | | | | | |
| | | 3/1 Channel System in combination per month | | | UNCSX | MQ3 | 158.20 | 115.48 | 56.53 | 15.12 | 5.30 | | | | | | |
| | | DS1 COCI in combination per month | | | UNC1X | UC1D1 | 11.80 | 6.71 | 4.84 | | | | | | | | |
| | | Additional DS1Loop in the same STS-1 Interoffice Transport Combination - Zone 1 | | 1 | UNC1X | USLXX | 86.47 | 210.70 | 114.60 | 63.96 | 17.97 | | | | | | |
| | | Additional DS1Loop in the same STS-1 Interoffice Transport Combination - Zone 2 | | 2 | UNC1X | USLXX | 114.10 | 210.70 | 114.60 | 63.96 | 17.97 | | | | | | |
| | | Additional DS1Loop in the same STS-1 Interoffice Transport Combination - Zone 3 | | 3 | UNC1X | USLXX | 297.76 | 210.70 | 114.60 | 63.96 | 17.97 | | | | | | |
| | | DS1 COCI in combination per month | | | UNC1X | UC1D1 | 11.80 | 6.71 | 4.84 | | | | | | | | |
| | | Nonrecurring Currently Combined Network Elements Switch -As-Is Charge | | | UNCSX | UNCCC | | 8.98 | 8.98 | 11.17 | 11.17 | | | | | | |
| | | **EXTENDED 4-WIRE 56 KBPS DIGITAL EXTENDED LOOP WITH 56 KBPS INTEROFFICE TRANSPORT** | | | | | | | | | | | | | | | |
| | | 4-wire 56 kbps Local Loop in combination - Zone 1 | | 1 | UNCDX | UDL56 | 27.59 | 125.22 | 60.48 | 59.69 | 7.84 | | | | | | |
| | | 4-wire 56 kbps Local Loop in combination - Zone 2 | | 2 | UNCDX | UDL56 | 32.48 | 125.22 | 60.48 | 59.69 | 7.84 | | | | | | |
| | | 4-wire 56 kbps Local Loop in combination - Zone 3 | | 3 | UNCDX | UDL56 | 36.37 | 125.22 | 60.48 | 59.69 | 7.84 | | | | | | |
| | | Interoffice Transport - Dedicated - 4-wire 56 kbps combination - Per Mile per month | | | UNCDX | 1L5XX | 0.01 | | | | | | | | | | |
| | | Interoffice Transport - Dedicated - 4-wire 56 kbps combination - Facility Termination per month | | | UNCDX | U1TD5 | 17.25 | 98.09 | 53.67 | 56.31 | 22.42 | | | | | | |
| | | Nonrecurring Currently Combined Network Elements Switch -As-Is Charge | | | UNCDX | UNCCC | | 8.98 | 8.98 | 11.17 | 11.17 | | | | | | |
| | | **EXTENDED 4-WIRE 64 KBPS DIGITAL EXTENDED LOOP WITH 64 KBPS INTEROFFICE TRANSPORT** | | | | | | | | | | | | | | | |
| | | 4-wire 64 kbps Lcoal Loop in Combination - Zone 1 | | 1 | UNCDX | UDL64 | 27.59 | 125.22 | 60.48 | 59.69 | 7.84 | | | | | | |
| | | 4-wire 64 kbps Lcoal Loop in Combination - Zone 2 | | 2 | UNCDX | UDL64 | 32.48 | 125.22 | 60.48 | 59.69 | 7.84 | | | | | | |
| | | 4-wire 64 kbps Lcoal Loop in Combination - Zone 3 | | 3 | UNCDX | UDL64 | 36.37 | 125.22 | 60.48 | 59.69 | 7.84 | | | | | | |
| | | Interoffice Transport - Dedicated - 4-wire 64 kbps combination - Per Mile per month | | | UNCDX | 1L5XX | 0.01 | | | | | | | | | | |
| | | Interoffice Transport - Dedicated - 4-wire 64 kbps combination - Facility Termination per month | | | UNCDX | U1TD6 | 17.25 | 98.09 | 53.67 | 56.31 | 22.42 | | | | | | |
| | | Nonrecurring Currently Combined Network Elements Switch -As-Is Charge | | | UNCDX | UNCCC | | 8.98 | 8.98 | 11.17 | 11.17 | | | | | | |
| | | **EXTENDED 2-WIRE VOICE GRADE LOOP WITH DS1 INTEROFFICE TRANSPORT w/ 3/1 MUX** | | | | | | | | | | | | | | | |
| | | First 2-wire VG Loop (SL2) in Combination - Zone 1 | | 1 | UNCVX | UEAL2 | 12.67 | 125.22 | 60.48 | 59.69 | 7.84 | | | | | | |
| | | First 2-wire VG Loop (SL2) in Combination - Zone 2 | | 2 | UNCVX | UEAL2 | 17.45 | 125.22 | 60.48 | 59.69 | 7.84 | | | | | | |
| | | First 2-wire VG Loop (SL2) in Combination - Zone 3 | | 3 | UNCVX | UEAL2 | 33.22 | 125.22 | 60.48 | 59.69 | 7.84 | | | | | | |
| | | First Interoffice Transport - Dedicated - DS1 combination - Per Mile | | | UNC1X | 1L5XX | 0.19 | | | | | | | | | | |
| | | First Interoffice Transport - Dedicated - DS1 combination - Facility Termination per month | | | UNC1X | U1TF1 | 79.02 | 181.24 | 123.53 | 56.72 | 22.32 | | | | | | |
| | | Per each DS1 Channelization System Per Month | | | UNC1X | MQ1 | 113.33 | 57.26 | 14.74 | 1.86 | 1.67 | | | | | | |
| | | Per each Voice Grade COCI - Per Month per month | | | UNCVX | 1D1VG | 0.62 | 6.71 | 4.84 | | | | | | | | |
| | | 3/1 Channel System in combination per month | | | UNC3X | MQ3 | 158.20 | 115.48 | 56.53 | 15.12 | 5.30 | | | | | | |
| | | Per each DS1 COCI in combination per month | | | UNC1X | UC1D1 | 11.80 | 6.71 | 4.84 | | | | | | | | |
| | | Each Additional 2-Wire VG Loop(SL 2) in the same DS1 Interoffice Transport Combination - Zone 1 | | 1 | UNCVX | UEAL2 | 12.67 | 125.22 | 60.48 | 59.69 | 7.84 | | | | | | |
| | | Each Additional 2-Wire VG Loop(SL2) in the same DS1 Interoffice Transport Combination - Zone 2 | | 2 | UNCVX | UEAL2 | 17.45 | 125.22 | 60.48 | 59.69 | 7.84 | | | | | | |
| | | Each Additional 2-Wire VG Loop(SL2) in the same DS1 Interoffice Transport Combination - Zone 3 | | 3 | UNCVX | UEAL2 | 33.22 | 125.22 | 60.48 | 59.69 | 7.84 | | | | | | |
| | | Each Additional Voice Grade COCI in combination - per month | | | UNCVX | 1D1VG | 0.62 | 6.71 | 4.84 | | | | | | | | |
| | | Each Additional DS1 Interoffice Channel per mile in same 3/1 Channel System per month | | | UNC1X | 1L5XX | 0.19 | | | | | | | | | | |
| | | Each Additional DS1 Interoffice Channel Facility Termination in same 3/1 Channel System per month | | | UNC1X | U1TF1 | 79.02 | 181.24 | 123.53 | 56.72 | 22.32 | | | | | | |

## UNBUNDLED NETWORK ELEMENTS - Kentucky

Attachment: 2 | Exhibit: A

| CATEGORY | RATE ELEMENTS | Interl m | Zone | BCS | USOC | RATES ($) | | | | | Svc Order Submitted Elec per LSR | Svc Order Submitted Manually per LSR | Incremental Charge - Manual Svc Order vs. Electronic- 1st | Incremental Charge - Manual Svc Order vs. Electronic- Add'l | Incremental Charge - Manual Svc Order vs. Electronic- Disc 1st | Incremental Charge - Manual Svc Order vs. Electronic- Disc Add'l |
|---|---|---|---|---|---|---|---|---|---|---|---|---|---|---|---|---|
| | | | | | | Rec | Nonrecurring | | Nonrecurring Disconnect | | OSS Rates ($) | | | | | |
| | | | | | | | First | Add'l | First | Add'l | SOMEC | SOMAN | SOMAN | SOMAN | SOMAN | SOMAN |
| | Each Additional DS1 COCI combination per month | | | UNC1X | UC1D1 | 11.80 | 6.71 | 4.84 | | | | | | | | |
| | Nonrecurring Currently Combined Network Elements Switch -As-Is Charge | | | UNC1X | UNCCC | | 8.98 | 8.98 | 11.17 | 11.17 | | | | | | |
| | **EXTENDED 4-WIRE VOICE GRADE LOOP WITH DEDICATED DS1 INTEROFFICE TRANSPORT w/ 3/1 MUX** | | | | | | | | | | | | | | | |
| | First 4-Wire Analog Voice Grade Local Loop in Combination - Zone 1 | | 1 | UNCVX | UEAL4 | 29.26 | 125.22 | 60.48 | 59.69 | 7.84 | | | | | | |
| | First 4-Wire Analog Voice Grade Local Loop in Combination - Zone 2 | | 2 | UNCVX | UEAL4 | 34.25 | 125.22 | 60.48 | 59.69 | 7.84 | | | | | | |
| | First 4-Wire Analog Voice Grade Local Loop in Combination - Zone 3 | | 3 | UNCVX | UEAL4 | 85.06 | 125.22 | 60.48 | 59.69 | 7.84 | | | | | | |
| | First Interoffice Transport - Dedicated - DS1 combination - Per Mile Per Month | | | UNC1X | 1L5XX | 0.19 | | | | | | | | | | |
| | First Interoffice Transport - Dedicated - DS1 - Facility Termination Per Month | | | UNC1X | U1TF1 | 79.02 | 181.24 | 123.53 | 56.72 | 22.32 | | | | | | |
| | Per each 1/0 Channel System in combination Per Month | | | UNC1X | MQ1 | 113.33 | 57.26 | 14.74 | 1.86 | 1.67 | | | | | | |
| | Per each Voice Grade COCI in combination - per month | | | UNCVX | 1D1VG | 0.62 | 6.71 | 4.84 | | | | | | | | |
| | 3/1 Channel System in combination per month | | | UNC3X | MQ3 | 158.20 | 115.48 | 56.53 | 15.12 | 5.30 | | | | | | |
| | Per each DS1 COCI in combination per month | | | UNC1X | UC1D1 | 11.80 | 6.71 | 4.84 | | | | | | | | |
| | Additional 4-Wire Analog Voice Grade Loop in same DS1 Interoffice Transport Combination - Zone 1 | | 1 | UNCVX | UEAL4 | 29.26 | 125.22 | 60.48 | 59.69 | 7.84 | | | | | | |
| | Additional 4-Wire Analog Voice Grade Loop in same DS1 Interoffice Transport Combination - Zone 2 | | 2 | UNCVX | UEAL4 | 34.25 | 125.22 | 60.48 | 59.69 | 7.84 | | | | | | |
| | Additional 4-Wire Analog Voice Grade Loop in same DS1 Interoffice Transport Combination - Zone 3 | | 3 | UNCVX | UEAL4 | 85.06 | 125.22 | 60.48 | 59.69 | 7.84 | | | | | | |
| | Each Additional DS1 Interoffice Channel per mile in same 3/1 Channel System per month | | | UNC1X | 1L5XX | 0.19 | | | | | | | | | | |
| | Each Additional DS1 Interoffice Channel Facility Termination in same 3/1 Channel System per month | | | UNC1X | U1TF1 | 79.02 | 181.24 | 123.53 | 56.72 | 22.32 | | | | | | |
| | Additional Voice Grade COCI - in combination - per month | | | UNCVX | 1D1VG | 0.62 | 6.71 | 4.84 | | | | | | | | |
| | Nonrecurring Currently Combined Network Elements Switch -As-Is Charge | | | UNC1X | UNCCC | | 8.98 | 8.98 | 11.17 | 11.17 | | | | | | |
| | **EXTENDED 4-WIRE 56 KBPS DIGITAL LOOP WITH DEDICATED DS1 INTEROFFICE TRANSPORT w/ 3/1 MUX** | | | | | | | | | | | | | | | |
| | First 4-Wire 56Kbps Digital Grade Local Loop in Combination - Zone 1 | | 1 | UNCDX | UDL56 | 27.59 | 125.22 | 60.48 | 59.69 | 7.84 | | | | | | |
| | First 4-Wire 56Kbps Digital Grade Local Loop in Combination - Zone 2 | | 2 | UNCDX | UDL56 | 32.48 | 125.22 | 60.48 | 59.69 | 7.84 | | | | | | |
| | First 4-Wire 56Kbps Digital Grade Local Loop in Combination - Zone 3 | | 3 | UNCDX | UDL56 | 36.37 | 125.22 | 60.48 | 59.69 | 7.84 | | | | | | |
| | First Interoffice Transport - Dedicated - DS1 combination - Per Mile Per Month | | | UNC1X | 1L5XX | 0.19 | | | | | | | | | | |
| | First Interoffice Transport - Dedicated - DS1 - combination Facility Termination Per Month | | | UNC1X | U1TF1 | 79.02 | 181.24 | 123.53 | 56.72 | 22.32 | | | | | | |
| | Per each 1/0 Channel System in combination Per Month | | | UNC1X | MQ1 | 113.33 | 57.26 | 14.74 | 1.86 | 1.67 | | | | | | |
| | Per each OCU-DP COCI (data) COCI per month (2.4-64kbs) | | | UNCDX | 1D1DD | 1.32 | 6.71 | 4.84 | | | | | | | | |
| | 3/1 Channel System in combination per month | | | UNC3X | MQ3 | 158.20 | 115.48 | 56.53 | 15.12 | 5.30 | | | | | | |
| | Per each DS1 COCI in combination per month | | | UNC1X | UC1D1 | 11.80 | 6.71 | 4.84 | | | | | | | | |
| | Additional 4-Wire 56Kbps Digital Grade Loop in same DS1 Interoffice Transport Combination - Zone 1 | | 1 | UNCDX | UDL56 | 27.59 | 125.22 | 60.48 | 59.69 | 7.84 | | | | | | |
| | Additional 4-Wire 56Kbps Digital Grade Loop in same DS1 Interoffice Transport Combination - Zone 2 | | 2 | UNCDX | UDL56 | 32.48 | 125.22 | 60.48 | 59.69 | 7.84 | | | | | | |
| | Additional 4-Wire 56Kbps Digital Grade Loop in same DS1 Interoffice Transport Combination - Zone 3 | | 3 | UNCDX | UDL56 | 36.37 | 125.22 | 60.48 | 59.69 | 7.84 | | | | | | |
| | OCU-DP COCI (data) COCI in combination per month (2.4-64kbs) | | | UNCDX | 1D1DD | 1.32 | 6.71 | 4.84 | | | | | | | | |
| | Each Additional DS1 Interoffice Channel per mile in same 3/1 Channel System per month | | | UNC1X | 1L5XX | 0.19 | | | | | | | | | | |
| | Each Additional DS1 Interoffice Channel Facility Termination in same 3/1 Channel System per month | | | UNC1X | U1TF1 | 79.02 | 181.24 | 123.53 | 56.72 | 22.32 | | | | | | |

| UNBUNDLED NETWORK ELEMENTS - Kentucky | | | | | | | | | | | | | | Attachment: 2 | | Exhibit: A | |
|---|---|---|---|---|---|---|---|---|---|---|---|---|---|---|---|---|---|
| CATEGORY | | RATE ELEMENTS | Interim | Zone | BCS | USOC | RATES ($) | | | | | Svc Order Submitted Elec per LSR | Svc Order Submitted Manually per LSR | Incremental Charge - Manual Svc Order vs. Electronic-1st | Incremental Charge - Manual Svc Order vs. Electronic-Add'l | Incremental Charge - Manual Svc Order vs. Electronic-Disc 1st | Incremental Charge - Manual Svc Order vs. Electronic-Disc Add'l |
| | | | | | | | Rec | Nonrecurring | | Nonrecurring Disconnect | | OSS Rates ($) | | | | | |
| | | | | | | | | First | Add'l | First | Add'l | SOMEC | SOMAN | SOMAN | SOMAN | SOMAN | SOMAN |
| | | Each Additional DS1 COCI in the same 3/1 channel system combination per month | | | UNC1X | UC1D1 | 11.80 | 6.71 | 4.84 | | | | | | | | |
| | | Nonrecurring Currently Combined Network Elements Switch -As-Is Charge | | | UNC1X | UNCCC | | 8.98 | 8.98 | 11.17 | 11.17 | | | | | | |
| | | EXTENDED 4-WIRE 64 KBPS DIGITAL LOOP WITH DEDICATED DS1 INTEROFFICE TRANSPORT w/ 3/1 MUX | | | | | | | | | | | | | | | |
| | | First 4-Wire 64Kbps Digital Grade Loop in a DS1 Interoffice Transport Combination - Zone 1 | | 1 | UNCDX | UDL64 | 27.59 | 125.22 | 60.48 | 59.69 | 7.84 | | | | | | |
| | | First 4-Wire 64Kbps Digital Grade Loop in a DS1 Interoffice Transport Combination - Zone 2 | | 2 | UNCDX | UDL64 | 32.48 | 125.22 | 60.48 | 59.69 | 7.84 | | | | | | |
| | | First 4-Wire 64Kbps Digital Grade Loop in a DS1 Interoffice Transport Combination - Zone 3 | | 3 | UNCDX | UDL64 | 36.37 | 125.22 | 60.48 | 59.69 | 7.84 | | | | | | |
| | | First Interoffice Transport - Dedicated - DS1 combination - Per Mile Per Month | | | UNC1X | 1L5XX | 0.19 | | | | | | | | | | |
| | | First Interoffice Transport - Dedicated - DS1 combination - Facility Termination Per Month | | | UNC1X | U1TF1 | 79.02 | 181.24 | 123.53 | 56.72 | 22.32 | | | | | | |
| | | Per each Channel System 1/0 in combination Per Month | | | UNC1X | MQ1 | 113.33 | 57.26 | 14.74 | 1.86 | 1.67 | | | | | | |
| | | Per each OCU-DP COCI (data) in combination - per month (2.4-64kbs) | | | UNCDX | 1D1DD | 1.32 | 6.71 | 4.84 | | | | | | | | |
| | | 3/1 Channel System in combination per month | | | UNC3X | MQ3 | 158.20 | 115.48 | 56.53 | 15.12 | 5.30 | | | | | | |
| | | Additional 4-Wire 64Kbps Digital Grade Loop in same DS1 Interoffice Transport Combination - Zone 1 | | 1 | UNCDX | UDL64 | 27.59 | 125.22 | 60.48 | 59.69 | 7.84 | | | | | | |
| | | Additional 4-Wire 64Kbps Digital Grade Loop in same DS1 Interoffice Transport Combination - Zone 2 | | 2 | UNCDX | UDL64 | 32.48 | 125.22 | 60.48 | 59.69 | 7.84 | | | | | | |
| | | Additional 4-Wire 64Kbps Digital Grade Loop in same DS1 Interoffice Transport Combination - Zone 3 | | 3 | UNCDX | UDL64 | 36.37 | 125.22 | 60.48 | 59.69 | 7.84 | | | | | | |
| | | Additional OCU-DP COCI (data) - DS1 to DS0 Channel System combination - per month (2.4-64kbs) | | | UNCDX | 1D1DD | 1.32 | 6.71 | 4.84 | | | | | | | | |
| | | Each Additional DS1 Interoffice Channel per mile in same 3/1 Channel System per month | | | UNC1X | 1L5XX | 0.19 | | | | | | | | | | |
| | | Each Additional DS1 Interoffice Channel Facility Termination in same 3/1 Channel System per month | | | UNC1X | U1TF1 | 79.02 | 181.24 | 123.53 | 56.72 | 22.32 | | | | | | |
| | | Each Additional DS1 COCI in the same 3/1 channel system combination per month | | | UNC1X | UC1D1 | 11.80 | 6.71 | 4.84 | | | | | | | | |
| | | Nonrecurring Currently Combined Network Elements Switch -As-Is Charge | | | UNC1X | UNCCC | | 8.98 | 8.98 | 11.17 | 11.17 | | | | | | |
| | | EXTENDED 2-WIRE ISDN LOOP WITH DS1 INTEROFFICE TRANSPORT w/ 3/1 MUX | | | | | | | | | | | | | | | |
| | | First 2-Wire ISDN Loop in a DS1 Interoffice Combination Transport - Zone 1 | | 1 | UNCNX | U1L2X | 18.44 | 125.22 | 60.48 | 59.69 | 7.84 | | | | | | |
| | | First 2-Wire ISDN Loop in a DS1 Interoffice Combination Transport - Zone 2 | | 2 | UNCNX | U1L2X | 25.08 | 125.22 | 60.48 | 59.69 | 7.84 | | | | | | |
| | | First 2-Wire ISDN Loop in a DS1 Interoffice Combination Transport - Zone 3 | | 3 | UNCNX | U1L2X | 42.87 | 125.22 | 60.48 | 59.69 | 7.84 | | | | | | |
| | | First Interoffice Transport - Dedicated - DS1 combination - Per Mile per month | | | UNC1X | 1L5XX | 0.19 | | | | | | | | | | |
| | | First Interoffice Transport - Dedicated - DS1 combination - Facility Termination per month | | | UNC1X | U1TF1 | 79.02 | 181.24 | 123.53 | 56.72 | 22.32 | | | | | | |
| | | Per each Channel System 1/0 in combination - per month | | | UNC1X | MQ1 | 113.33 | 57.26 | 14.74 | 1.86 | 1.67 | | | | | | |
| | | Per each 2-wire ISDN COCI (BRITE) in combination - per month | | | UNCNX | UC1CA | 2.84 | 6.71 | 4.84 | | | | | | | | |
| | | 3/1 Channel System in combination per month | | | UNC3X | MQ3 | 158.20 | 115.48 | 56.53 | 15.12 | 5.30 | | | | | | |
| | | Per each DS1 COCI in combination per month | | | UNC1X | UC1D1 | 11.80 | 6.71 | 4.84 | | | | | | | | |
| | | Additional 2-wire ISDN Loop in same DS1Interoffice Transport Combination - Zone 1 | | 1 | UNCNX | U1L2X | 18.44 | 125.22 | 60.48 | 59.69 | 7.84 | | | | | | |
| | | Additional 2-wire ISDN Loop in same DS1Interoffice Transport Combination - Zone 2 | | 2 | UNCNX | U1L2X | 25.08 | 125.22 | 60.48 | 59.69 | 7.84 | | | | | | |
| | | Additional 2-wire ISDN Loop in same DS1Interoffice Transport Combination - Zone 3 | | 3 | UNCNX | U1L2X | 42.87 | 125.22 | 60.48 | 59.69 | 7.84 | | | | | | |
| | | Additional 2-wire ISDN COCI (BRITE) in same 1/0 channel system combination- per month | | | UNCNX | UC1CA | 2.84 | 6.71 | 4.84 | | | | | | | | |

| UNBUNDLED NETWORK ELEMENTS - Kentucky | | | | | | | | | | | | | | Attachment: 2 | | Exhibit: A | |
|---|---|---|---|---|---|---|---|---|---|---|---|---|---|---|---|---|---|
| CATEGORY | | RATE ELEMENTS | Interl m | Zone | BCS | USOC | RATES ($) | | | | | Svc Order Submitted Elec per LSR | Svc Order Submitted Manually per LSR | Incremental Charge - Manual Svc Order vs. Electronic-1st | Incremental Charge - Manual Svc Order vs. Electronic-Add'l | Incremental Charge - Manual Svc Order vs. Electronic-Disc 1st | Incremental Charge - Manual Svc Order vs. Electronic-Disc Add'l |
| | | | | | | | Rec | Nonrecurring | | Nonrecurring Disconnect | | OSS Rates ($) | | | | | |
| | | | | | | | | First | Add'l | First | Add'l | SOMEC | SOMAN | SOMAN | SOMAN | SOMAN | SOMAN |
| | | Each Additional DS1 Interoffice Channel per mile in same 3/1 Channel System per month | | | UNC1X | 1L5XX | 0.19 | | | | | | | | | | |
| | | Each Additional DS1 Interoffice Channel Facility Termination in same 3/1 Channel System per month | | | UNC1X | U1TF1 | 79.02 | 181.24 | 123.53 | 56.72 | 22.32 | | | | | | |
| | | Each Additional DS1 COCI in the same 3/1 channel system combination per month | | | UNC1X | UC1D1 | 11.80 | 6.71 | 4.84 | | | | | | | | |
| | | Nonrecurring Currently Combined Network Elements Switch -As-Is Charge | | | UNC1X | UNCCC | | 8.98 | 8.98 | 11.17 | 11.17 | | | | | | |
| | **EXTENDED 4-WIRE DS1 LOOP WITH DEDICATED DS1 INTEROFFICE TRANSPORT w/ 3/1 MUX** | | | | | | | | | | | | | | | | |
| | | First 4-wire DS1 Digital Lcoal Loop in Combination - Zone 1 | | 1 | UNC1X | USLXX | 86.47 | 210.70 | 114.60 | 63.96 | 17.97 | | | | | | |
| | | First 4-wire DS1 Digital Lcoal Loop in Combination - Zone 2 | | 2 | UNC1X | USLXX | 114.10 | 210.70 | 114.60 | 63.96 | 17.97 | | | | | | |
| | | First 4-wire DS1 Digital Lcoal Loop in Combination - Zone 3 | | 3 | UNC1X | USLXX | 297.76 | 210.70 | 114.60 | 63.96 | 17.97 | | | | | | |
| | | First Interoffice Transport - Dedicated - DS1 combination - Per Mile Per Month | | | UNC1X | 1L5XX | 0.19 | | | | | | | | | | |
| | | First Interoffice Transport - Dedicated - DS1 combination - Facility Termination Per Month | | | UNC1X | U1TF1 | 79.02 | 181.24 | 123.53 | 56.72 | 22.32 | | | | | | |
| | | 3/1 Channel System in combination per month | | | UNC3X | MQ3 | 158.20 | 115.48 | 56.53 | 15.12 | 5.30 | | | | | | |
| | | Per each DS1 COCI combination per month | | | UNC1X | UC1D1 | 11.80 | 6.71 | 4.84 | | | | | | | | |
| | | Each Additional DS1 Interoffice Channel per mile in same 3/1 Channel System per month | | | UNC1X | 1L5XX | 0.19 | | | | | | | | | | |
| | | Each Additional DS1 Interoffice Channel Facility Termination in same 3/1 Channel System per month | | | UNC1X | U1TF1 | 79.02 | 181.24 | 123.53 | 56.72 | 22.32 | | | | | | |
| | | Each Additional DS1 COCI in the same 3/1 channel system combination per month | | | UNC1X | UC1D1 | 11.80 | 6.71 | 4.84 | | | | | | | | |
| | | Additional 4-Wire DS1 Digital Local Loop in Combination - Zone 1 | | 1 | UNC1X | USLXX | 86.47 | 210.70 | 114.60 | 63.96 | 17.97 | | | | | | |
| | | Additional 4-Wire DS1 Digital Local Loop in Combination - Zone 2 | | 2 | UNC1X | USLXX | 114.10 | 210.70 | 114.60 | 63.96 | 17.97 | | | | | | |
| | | Additional 4-Wire DS1 Digital Local Loop in Combination - Zone 3 | | 3 | UNC1X | USLXX | 297.76 | 210.70 | 114.60 | 63.96 | 17.97 | | | | | | |
| | | Nonrecurring Currently Combined Network Elements Switch -As-Is Charge | | | UNC1X | UNCCC | | 8.98 | 8.98 | 11.17 | 11.17 | | | | | | |
| | **EXTENDED 4-WIRE 56 KBPS DIGITAL EXTENDED LOOP WITH DS0 INTEROFFICE TRANSPORT** | | | | | | | | | | | | | | | | |
| | | First 4-wire 56 kbps Local Loop in combination - Zone 1 | | 1 | UNCDX | UDL56 | 27.59 | 125.22 | 60.48 | 59.69 | 7.84 | | | | | | |
| | | First 4-wire 56 kbps Local Loop in combination - Zone 2 | | 2 | UNCDX | UDL56 | 32.48 | 125.22 | 60.48 | 59.69 | 7.84 | | | | | | |
| | | First 4-wire 56 kbps Local Loop in combination - Zone 3 | | 3 | UNCDX | UDL56 | 36.37 | 125.22 | 60.48 | 59.69 | 7.84 | | | | | | |
| | | First 4-wiree 56 kbps Interoffice Transport - Dedicated - Per Mile per month | | | UNCDX | 1L5XX | 0.01 | | | | | | | | | | |
| | | First 4-wire 56 kbps Interoffice Transport - Dedicated - Facility Termination per month | | | UNCDX | U1TD5 | 17.25 | 98.09 | 53.67 | 56.31 | 22.42 | | | | | | |
| | | Nonrecurring Currently Combined Network Elements Switch -As-Is Charge | | | UNCDX | UNCCC | | 8.98 | 8.98 | 11.17 | 11.17 | | | | | | |
| | **EXTENDED 4-WIRE 64 KBPS DIGITAL EXTENDED LOOP WITH DS0 INTEROFFICE TRANSPORT** | | | | | | | | | | | | | | | | |
| | | First 4-wire 64 kbps Local Loop in combination - Zone 1 | | 1 | UNCDX | UDL64 | 27.59 | 125.22 | 60.48 | 59.69 | 7.84 | | | | | | |
| | | First 4-wire 64 kbps Local Loop in combination - Zone 2 | | 2 | UNCDX | UDL64 | 32.48 | 125.22 | 60.48 | 59.69 | 7.84 | | | | | | |
| | | First 4-wire 64 kbps Local Loop in combination - Zone 3 | | 3 | UNCDX | UDL64 | 36.37 | 125.22 | 60.48 | 59.69 | 7.84 | | | | | | |
| | | First I4-wire 65 kbps Interoffice Transport - Dedicated - Per Mile per month | | | UNCDX | 1L5XX | 0.01 | | | | | | | | | | |
| | | First 4-wire 64 kbps Interoffice Transport - Dedicated - Facility Termination per month | | | UNCDX | U1TD6 | 17.25 | 98.09 | 53.67 | 56.31 | 22.42 | | | | | | |
| | | Nonrecurring Currently Combined Network Elements Switch -As-Is Charge | | | UNCDX | UNCCC | | 8.98 | 8.98 | 11.17 | 11.17 | | | | | | |
| **ADDITIONAL NETWORK ELEMENTS** | | | | | | | | | | | | | | | | | |
| | **When used as a part of a currently combined facility, the non-recurrng charges do not apply, but a Switch As Is charge does apply.** | | | | | | | | | | | | | | | | |
| | **When used as ordinarily combined network elements in All States, the non-recurring charges apply and the Switch As Is Charge does not.** | | | | | | | | | | | | | | | | |
| | **Nonrecurring Currently Combined Network Elements "Switch As Is" Charge (One applies to each combination)** | | | | | | | | | | | | | | | | |
| | | Nonrecurring Currently Combined Network Elements Switch -As-Is Charge - 2 wire/4-Wire VG | | | UNCVX | UNCCC | | 8.98 | 8.98 | 11.17 | 11.17 | | | | | | |

| UNBUNDLED NETWORK ELEMENTS - Kentucky | | | | | | | | | | | | | | Attachment: 2 | | Exhibit: A | |
|---|---|---|---|---|---|---|---|---|---|---|---|---|---|---|---|---|---|
| CATEGORY | | RATE ELEMENTS | Interim | Zone | BCS | USOC | RATES ($) | | | | | Svc Order Submitted Elec per LSR | Svc Order Submitted Manually per LSR | Incremental Charge - Manual Svc Order vs. Electronic-1st | Incremental Charge - Manual Svc Order vs. Electronic-Add'l | Incremental Charge - Manual Svc Order vs. Electronic-Disc 1st | Incremental Charge - Manual Svc Order vs. Electronic-Disc Add'l |
| | | | | | | | Rec | Nonrecurring | | Nonrecurring Disconnect | | OSS Rates ($) | | | | | |
| | | | | | | | | First | Add'l | First | Add'l | SOMEC | SOMAN | SOMAN | SOMAN | SOMAN | SOMAN |
| | | Nonrecurring Currently Combined Network Elements Switch -As-Is Charge - 56/64 kbps | | | UNCDX | UNCCC | | 8.98 | 8.98 | 11.17 | 11.17 | | | | | | |
| | | Nonrecurring Currently Combined Network Elements Switch -As-Is Charge - DS1 | | | UNC1X | UNCCC | | 8.98 | 8.98 | 11.17 | 11.17 | | | | | | |
| | | Nonrecurring Currently Combined Network Elements Switch -As-Is Charge - DS3 | | | UNC3X | UNCCC | | 8.98 | 8.98 | 11.17 | 11.17 | | | | | | |
| | | Nonrecurring Currently Combined Network Elements Switch -As-Is Charge - STS1 | | | UNCSX | UNCCC | | 8.98 | 8.98 | 11.17 | 11.17 | | | | | | |
| | **Optional Features & Functions:** | | | | | | | | | | | | | | | | |
| | | Clear Channel Capability Extended Frame Option - per DS1 | I | | U1TD1, ULDD1,UNC1X | CCOEF | | 0I | 0I | 0I | 0I | | | | | | |
| | | Clear Channel Capability Super FrameOption - per DS1 | I | | U1TD1, ULDD1,UNC1X | CCOSF | | 0I | 0I | 0I | 0I | | | | | | |
| | | Clear Channel Capability (SF/ESF) Option - Subsequent Activity - per DS1 | I | | ULDD1, U1TD1, UNC1X, USL | NRCCC | | 184.91S | 23.82S | 1.99S | 0.78S | | | | | | |
| | | C-bit Parity Option - Subsequent Activity - per DS3 | I | | U1TD3, ULDD3, UE3, UNC3X | NRCC3 | | 205.70S | 7.20S | .6924S | 0S | | | | | | |
| | **MULTIPLEXERS** | | | | | | | | | | | | | | | | |
| | | DS1 to DS0 Channel System per month | | | UNC1X | MQ1 | 113.33 | 57.26 | 14.74 | 1.86 | 1.67 | | | | | | |
| | | OCU-DP COCI (data) - DS1 to DS0 Channel System - per month (2.4-64kbs) used for a Local Loop | | | UDL | 1D1DD | 1.32 | 10.07 | 7.08 | | | | | | | | |
| | | OCU-DP COCI (data) - DS1 to DS0 Channel System - per month (2.4-64kbs) used for connection to a channelized DS1 Local Channel in the same SWC as collocation | | | U1TUD | 1D1DD | 1.32 | 10.07 | 7.08 | | | | | | | | |
| | | 2-wire ISDN COCI (BRITE) - DS1 to DS0 Channel Systsem - per month for a Local Loop | | | UDN | UC1CA | 2.84 | 10.07 | 7.08 | | | | | | | | |
| | | 2-wire ISDN COCI (BRITE) - DS1 to DS0 Channel Systsem - per month used for connection to a channelized DS1 Local Channel in the same SWC as collocation | | | U1TUB | UC1CA | 2.84 | 10.07 | 7.08 | | | | | | | | |
| | | Voice Grade COCI - DS1 to DS0 Channel System - per month used for a Local Loop | | | UEA | 1D1VG | 0.6228 | 10.07 | 7.08 | | | | | | | | |
| | | Voice Grade COCI - DS1 to DS0 Channel System - per month used for connection to a channelized DS1 Local Channel in the same SWC as collocation | | | U1TUC | 1D1VG | 0.6228 | 10.07 | 7.08 | | | | | | | | |
| | | DS3 to DS1 Channel System per month | | | UNC3X | MQ3 | 158.20 | 115.48 | 56.53 | 15.12 | 5.30 | | | | | | |
| | | STS-1 to DS1 Channel System per month | | | UNCSX | MQ3 | 158.20 | 115.48 | 56.53 | 15.12 | 5.30 | | | | | | |
| | | DS1 COCI used with Loop per month | | | USL | UC1D1 | 11.80 | 10.07 | 7.08 | | | | | | | | |
| | | DS1 COCI (used for connection to a channelized DS1 Local Channel in the same SWC as collocation) per month | | | U1TUA | UC1D1 | 11.80 | 10.07 | 7.08 | | | | | | | | |
| | | DS1 COCI used with Interoffice Channel per month | | | U1TD1 | UC1D1 | 11.80 | 10.07 | 7.08 | | | | | | | | |
| | | DS3 Interface Unit (DS1 COCI) used with Local Channel per month | | | ULDD1 | UC1D1 | 11.80 | 10.07 | 7.08 | | | | | | | | |
| **UNBUNDLED LOCAL EXCHANGE SWITCHING(PORTS)** | | | | | | | | | | | | | | | | | |
| | **Exchange Ports** | | | | | | | | | | | | | | | | |
| | **NOTE: Although the Port Rate includes all available features in GA, KY, LA & TN, the desired features will need to be ordered using retail USOCs** | | | | | | | | | | | | | | | | |
| | **2-WIRE VOICE GRADE LINE PORT RATES (RES)** | | | | | | | | | | | | | | | | |
| | | Exchange Ports - 2-Wire Analog Line Port- Res. | | | UEPSR | UEPRL | 1.49 | 3.74 | 3.63 | 2.23 | 2.13 | | | | | | |
| | | Exchange Ports - 2-Wire Analog Line Port with Caller ID - Res. | | | UEPSR | UEPRC | 1.49 | 3.74 | 3.63 | 2.23 | 2.13 | | | | | | |
| | | Exchange Ports - 2-Wire Analog Line Port outgoing only - Res. | | | UEPSR | UEPRO | 1.49 | 3.74 | 3.63 | 2.23 | 2.13 | | | | | | |
| | | Exchange Ports - 2-Wire VG unbundled KY extended local dialing parity Port with Caller ID - Res. | | | UEPSR | UEPRM | 1.49 | 3.74 | 3.63 | 2.23 | 2.13 | | | | | | |
| | | Exchange Ports - 2-Wire VG unbundled res, low usage line port with Caller ID (LUM) | | | UEPSR | UEPAP | 1.49 | 3.74 | 3.63 | 2.23 | 2.13 | | | | | | |
| | | Exchange Ports - 2-Wire Voice Kentucky Residence Dialing Plan without Caller ID | | | UEPSR | UEPWE | 1.49 | 3.74 | 3.63 | 2.23 | 2.13 | | | | | | |
| | | 2-Wire voice unbundled Low Usage Line Port without Caller ID Capability | | | UEPSR | UEPRT | 1.49 | 3.74 | 3.63 | 2.23 | 2.13 | | | | | | |

| UNBUNDLED NETWORK ELEMENTS - Kentucky | | | | | | | | | | | | | | Attachment: 2 | | Exhibit: A | |
|---|---|---|---|---|---|---|---|---|---|---|---|---|---|---|---|---|---|
| CATEGORY | RATE ELEMENTS | Interim | Zone | BCS | USOC | RATES ($) | | | | | Svc Order Submitted Elec per LSR | Svc Order Submitted Manually per LSR | Incremental Charge - Manual Svc Order vs. Electronic-1st | Incremental Charge - Manual Svc Order vs. Electronic-Add'l | Incremental Charge - Manual Svc Order vs. Electronic-Disc 1st | Incremental Charge - Manual Svc Order vs. Electronic-Disc Add'l |
| | | | | | | Rec | Nonrecurring | | Nonrecurring Disconnect | | OSS Rates ($) | | | | | |
| | | | | | | | First | Add'l | First | Add'l | SOMEC | SOMAN | SOMAN | SOMAN | SOMAN | SOMAN |
| | Subsequent Activity | | | UEPSR | USASC | 0.00 | 0.00 | 0.00 | | | | | | | | |
| FEATURES | | | | | | | | | | | | | | | | |
| | All Available Vertical Features | | | UEPSR | UEPVF | 0.00 | 0.00 | 0.00 | | | | | | | | |
| 2-WIRE VOICE GRADE LINE PORT RATES (BUS) | | | | | | | | | | | | | | | | |
| | Exchange Ports - 2-Wire Analog Line Port without Caller ID - Bus | | | UEPSB | UEPBL | 1.49 | 3.74 | 3.63 | 2.23 | 2.13 | | | | | | |
| | Exchange Ports - 2-Wire VG unbundled Line Port with unbundled port with Caller+E484 ID - Bus. | | | UEPSB | UEPBC | 1.49 | 3.74 | 3.63 | 2.23 | 2.13 | | | | | | |
| | Exchange Ports - 2-Wire Analog Line Port outgoing only - Bus. | | | UEPSB | UEPBO | 1.49 | 3.74 | 3.63 | 2.23 | 2.13 | | | | | | |
| | Exchange Ports - 2-Wire VG unbundled KY extended local dialing parity Port with Caller ID - Bus. | | | UEPSB | UEPBM | 1.49 | 3.74 | 3.63 | 2.23 | 2.13 | | | | | | |
| | Exhange Ports - 2-Wire VG unbundled incoming only port with Caller ID - Bus | | | UEPSB | UEPB1 | 1.49 | 3.74 | 3.63 | 2.23 | 2.13 | | | | | | |
| | Exchange Ports - 2-Wire Voice Kentucky Business Dialing Plan without Caller ID | | | UEPSB | UEPWF | 1.49 | 3.74 | 3.63 | 2.23 | 2.13 | | | | | | |
| | 2-Wire voice unbundled Incoming Only Port without Caller ID Capability | | | UEPSB | UEPBE | 1.49 | 3.74 | 3.63 | 2.23 | 2.13 | | | | | | |
| | Subsequent Activity | | | UEPSB | USASC | 0.00 | 0.00 | 0.00 | | | | | | | | |
| FEATURES | | | | | | | | | | | | | | | | |
| | All Available Vertical Features | | | UEPSB | UEPVF | 0.00 | 0.00 | 0.00 | | | | | | | | |
| EXCHANGE PORT RATES (DID & PBX) | | | | | | | | | | | | | | | | |
| | 2-Wire VG Unbundled 2-Way PBX Trunk - Res | | | UEPSE | UEPRD | 1.49 | 39.05 | 18.17 | 15.38 | 0.89 | | | | | | |
| | 2-Wire VG Line Side Unbundled 2-Way PBX Trunk - Bus | | | UEPSP | UEPPC | 1.49 | 39.05 | 18.17 | 15.38 | 0.89 | | | | | | |
| | 2-Wire VG Line Side Unbundled Outward PBX Trunk - Bus | | | UEPSP | UEPPO | 1.49 | 39.05 | 18.17 | 15.38 | 0.89 | | | | | | |
| | 2-Wire VG Line Side Unbundled Incoming PBX Trunk - Bus | | | UEPSP | UEPP1 | 1.49 | 39.05 | 18.17 | 15.38 | 0.89 | | | | | | |
| | 2-Wire Analog Long Distance Terminal PBX Trunk - Bus | | | UEPSP | UEPLD | 1.49 | 39.05 | 18.17 | 15.38 | 0.89 | | | | | | |
| | 2-Wire Voice Unbundled PBX LD Terminal Ports | | | UEPSP | UEPLD | 1.49 | 39.05 | 18.17 | 15.38 | 0.89 | | | | | | |
| | 2-Wire Vice Unbundled 2-Way PBX Usage Port | | | UEPSP | UEPXA | 1.49 | 39.05 | 18.17 | 15.38 | 0.89 | | | | | | |
| | 2-Wire Voice Unbundled PBX Toll Terminal Hotel Ports | | | UEPSP | UEPXB | 1.49 | 39.05 | 18.17 | 15.38 | 0.89 | | | | | | |
| | 2-Wire Voice Unbundled PBX LD DDD Terminals Port | | | UEPSP | UEPXC | 1.49 | 39.05 | 18.17 | 15.38 | 0.89 | | | | | | |
| | 2-Wire Voice Unbundled PBX LD Terminal Switchboard Port | | | UEPSP | UEPXD | 1.49 | 39.05 | 18.17 | 15.38 | 0.89 | | | | | | |
| | 2-Wire Voice Unbundled PBX LD Terminal Switchboard IDD Capable Port | | | UEPSP | UEPXE | 1.49 | 39.05 | 18.17 | 15.38 | 0.89 | | | | | | |
| | 2-Wire Voice Unbundled 2-Way PBX Kentucky Room Area Calling Port Without LUD | | | UEPSP | UEPXF | 1.49 | 39.05 | 18.17 | 15.38 | 0.89 | | | | | | |
| | 2-Wire Voice Unbundled PBX Kentucky LUD Area Calling Port | | | UEPSP | UEPXG | 1.49 | 39.05 | 18.17 | 15.38 | 0.89 | | | | | | |
| | 2-Wire Voice Unbundled PBX Kentucky Premium Callling Port | | | UEPSP | UEPXH | 1.49 | 39.05 | 18.17 | 15.38 | 0.89 | | | | | | |
| | 2-Wire Voice Unbundled 2-Way PBX Kentucky Area Callling Port Without LUD | | | UEPSP | UEPXJ | 1.49 | 39.05 | 18.17 | 15.38 | 0.89 | | | | | | |
| | 2-Wire Voice Unbundled 2-Way PBX Hotel/Hospital Economy Administrative Calling Port | | | UEPSP | UEPXL | 1.49 | 39.05 | 18.17 | 15.38 | 0.89 | | | | | | |
| | 2-Wire Voice Unbundled 2-Way PBX Hotel/Hospital Economy Room Calling Port | | | UEPSP | UEPXM | 1.49 | 39.05 | 18.17 | 15.38 | 0.89 | | | | | | |
| | 2-Wire Voice Unbundled 1-Way Outgoing PBX Hotel/Hospital Discount Room Calling Port | | | UEPSP | UEPXO | 1.49 | 39.05 | 18.17 | 15.38 | 0.89 | | | | | | |
| | 2-Wire Voice Unbundled 1-Way Outgoing PBX Measured Port | | | UEPSP | UEPXS | 1.49 | 39.05 | 18.17 | 15.38 | 0.89 | | | | | | |
| | Subsequent Activity | | | UEPSP | USASC | 0.00 | 0.00 | 0.00 | | | | | | | | |
| FEATURES | | | | | | | | | | | | | | | | |
| | All Available Vertical Features | | | UEPSP UEPSE | UEPVF | 0.00 | 0.00 | 0.00 | | | | | | | | |
| EXCHANGE PORT RATES (COIN) | | | | | | | | | | | | | | | | |
| | Exchange Ports - Coin Port | | | | | 1.49 | 3.74 | 3.63 | 2.23 | 2.13 | | | | | | |
| Local Switching Features offered with Port | | | | | | | | | | | | | | | | |
| NOTE: Transmission/usage charges associated with POTS circuit switched usage will also apply to circuit switched voice and/or circuit switched data transmission by B-Channels associated with 2-wire ISDN ports. | | | | | | | | | | | | | | | | |
| NOTE: Access to B Channel or D Channel Packet capabilities will be available only through BFR/New Business Request Process. Rates for the packet capabilities will be determined via the Bona Fide Request/New Business Request Process. | | | | | | | | | | | | | | | | |
| | Exchange port - 4-wire ISDN trunk port -all available features included | | | | UEPEX | 101.60 | 188.36 | 95.15 | 61.92 | 22.67 | | | | | | |
| UNBUNDLED LOCAL EXCHANGE SWITCHING(PORTS) | | | | | | | | | | | | | | | | |
| EXCHANGE PORT RATES | | | | | | | | | | | | | | | | |

## UNBUNDLED NETWORK ELEMENTS - Kentucky

| CATEGORY | RATE ELEMENTS | Interim | Zone | BCS | USOC | RATES ($) | | | | | Svc Order Submitted Elec per LSR | Svc Order Submitted Manually per LSR | Attachment: 2 Incremental Charge - Manual Svc Order vs. Electronic-1st | Attachment: 2 Incremental Charge - Manual Svc Order vs. Electronic-Add'l | Exhibit: A Incremental Charge - Manual Svc Order vs. Electronic-Disc 1st | Exhibit: A Incremental Charge - Manual Svc Order vs. Electronic-Disc Add'l |
|---|---|---|---|---|---|---|---|---|---|---|---|---|---|---|---|---|
| | | | | | | Rec | Nonrecurring | | Nonrecurring Disconnect | | OSS Rates ($) | | | | | |
| | | | | | | | First | Add'l | First | Add'l | SOMEC | SOMAN | SOMAN | SOMAN | SOMAN | SOMAN |
| | The DS1 Port rates below for 4-Wire DDITS Trunk Port and 4-Wire ISDN Port in this rate exhibit apply to the embedded base in place as of 10/2/03 until 4/1/04. After 4/1/04 these rates shall revert to tariff rates or a separate agreement. | | | | | | | | | | | | | | | |
| | Requests for 4-Wire DDITS Trunk Ports with 4-Wire ISDN DS1 Ports after the effective date of this amendment shall be provided pursuant to a separate agreement or tariff at BellSouth's discretion. | | | | | | | | | | | | | | | |
| | Exchange Ports - 2-Wire DID Port | | | UEPEX | UEPP2 | 10.51 | 92.18 | 15.82 | 52.16 | 5.30 | | | | | | |
| | Exchange Ports - DDITS Port - 4-Wire DS1 Port with DID capability (E:4/1/2004) | | | UEPDD | UEPDD | 74.77 | 164.86 | 77.74 | 60.69 | 3.86 | | | | | | |
| | Exchange Ports - 2-Wire ISDN Port (See Notes below.) | | | UEPTX, UEPSX | U1PMA | 13.46 | 60.60 | 50.67 | 32.83 | 14.17 | | | | | | |
| | All Features Offered | | | UEPTX, UEPSX | UEPVF | 0.00 | 0.00 | 0.00 | | | | | | | | |
| | Exchange Ports - 2-Wire ISDN Port -- Channel Profiles | | | UEPTX, UEPSX | U1UMA | 0.00 | 0.00 | 0.00 | | | | | | | | |
| | NOTE: Transmission/usage charges associated with POTS circuit switched usage will also apply to circuit switched voice and/or circuit switched data transmission by B-Channels associated with 2-wire ISDN ports. | | | | | | | | | | | | | | | |
| | NOTE: Access to B Channel or D Channel Packet capabilities will be available only through BFR/New Business Request Process. Rates for the packet capabilities will be determined via the Bona Fide Request/New Business Request Process. | | | | | | | | | | | | | | | |
| | EXCHANGE PORT RATES (continued) | | | | | | | | | | | | | | | |
| | Exchange Ports - 4-Wire ISDN DS1 Port with Detailed E911 Locator Capability (E:4/1/2004) | | | UEPEX | UEPEX | 101.60 | 188.36 | 95.15 | 61.92 | 22.67 | | | | | | |
| | Exchange Ports - 4-Wire ISDN DS1 Port (E:4/1/2004) | | | UEPDX | UEPDX | 101.60 | 188.36 | 95.15 | 61.92 | 22.67 | | | | | | |
| | Physical Collocation - DS1 Cross-Connects | | | UEPEX UEPDX | PE1P1 | 1.48 | 44.23 | 31.98 | 12.81 | 11.57 | | | | | | |
| | Virtual collocation - Special Access & UNE, cross-connect per DS1 | | | UEPEX UEPDX | CNC1X | 1.48 | 44.23 | 31.98 | 12.81 | 11.57 | | | | | | |
| | Detailed E911 with Locator Capability (required with UEPEX port) | | | | | | | | | | | | | | | |
| | Unbundled Exchange Ports, 4-Wire ISDN DS1 Port - E911 Locator Capability - Initial Profile Establishment per CLEC per State | | | UEPEX | UEP1A | 0.00 | 1,811.00 | | 156.69 | | | | | | | |
| | Unbundled Exchange Ports, 4-Wire ISDN DS1 Port - E911 Locator Capability - Subsequent Profile Changes, Additions, Deletions | | | UEPEX | UEP1B | 0.00 | 175.82 | | | | | | | | | |
| | New or Additional PRI Telephone Numbers | | | | | | | | | | | | | | | |
| | Unbundled Exchange Ports, 4-Wire ISDN DS1 Port - E911 Locator Capability 2-way Telephone Numbers, per number in E911 profile [New or Additional] | | | UEPEX | UEP1C | 0.07 | 0.54 | | | | | | | | | |
| | Unbundled Exchange Ports, 4-Wire ISDN DS1 Port - E911 Locator Capability - Outdial Telephone Numbers, per number in E911 profile [New or Additional] | | | UEPEX | UEP1D | 0.07 | 12.71 | 12.71 | | | | | | | | |
| | Unbundled Exchange Ports, 4-Wire ISDN DS1 Port - Inward Telephone Numbers - Inward Data Only Option [New or Additional] | | | UEPDX | UEP1E | 0.00 | 0.54 | | | | | | | | | |
| | Exchange Ports - 4-Wire ISDN DS1 Port - Subsequent [New] Inward Tel Numbers [Customer Testing Purposes] | | | UEPEX | PR7ZT | 0.00 | 25.41 | 25.41 | | | | | | | | |
| | LOCAL NUMBER PORTABILITY | | | | | | | | | | | | | | | |
| | Local Number Portability (1 per port) | | | UEPEX UEPDX | LNPCN | 1.75 | | | | | | | | | | |
| | INTERFACE (Provsioning Only) | | | | | | | | | | | | | | | |
| | Voice/Data | | | UEPEX | PR71V | 0.00 | 0.00 | 0.00 | | | | | | | | |
| | Digital Data | | | UEPEX | PR71D | 0.00 | 0.00 | 0.00 | | | | | | | | |
| | Inward Data | | | UEPDX | PR71E | 0.00 | 0.00 | 0.00 | | | | | | | | |
| | New or Additional Channel | | | | | | | | | | | | | | | |
| | New or Additional - Voice/Data "B" Channel | | | UEPEX | PR7BV | 0.00 | 15.48 | | | | | | | | | |
| | New or Additional - Digital Data "B" Channel | | | UEPEX | PR7BF | 0.00 | 15.48 | | | | | | | | | |
| | New or Additional Inward Data "B" Channel | | | UEPDX | PR7BD | 0.00 | 15.48 | | | | | | | | | |
| | New or Additional Useage Sensitive Voice Data "B" Channel | | | UEPEX | PR7BS | 0.00 | 15.48 | | | | | | | | | |
| | New or Additional Useage Sensitive Digital Data "B" Channel | | | UEPEX | PR7BU | 0.00 | 15.48 | | | | | | | | | |
| | New or Additional PRI "D" Channel | | | UEPEX | PR7EX | 0.00 | 15.48 | | | | | | | | | |
| | CALL TYPES | | | | | | | | | | | | | | | |
| | Inward | | | UEPEX UEPDX | PR7C1 | 0.00 | 0.00 | 0.00 | | | | | | | | |
| | Outward | | | UEPEX | PR7CO | 0.00 | 0.00 | 0.00 | | | | | | | | |
| | Two-way | | | UEPEX | PR7CC | 0.00 | 0.00 | 0.00 | | | | | | | | |
| | UNBUNDLED PORT with REMOTE CALL FORWARDING CAPABILITY | | | | | | | | | | | | | | | |
| | UNBUNDLED REMOTE CALL FORWARDING SERVICE - RESIDENCE | | | | | | | | | | | | | | | |
| | Unbundled Remote Call Forwarding Service, Area Calling, Res | | | UEPVR | UERAC | 1.49 | 3.74 | 3.63 | | | | | | | | |
| | Unbundled Remote Call Forwarding Service, Local Calling - Res | | | UEPVR | UERLC | 1.49 | 3.74 | 3.63 | | | | | | | | |
| | Unbundled Remote Call Forwarding Service, InterLATA - Res | | | UEPVR | UERTE | 1.49 | 3.74 | 3.63 | | | | | | | | |

| UNBUNDLED NETWORK ELEMENTS - Kentucky | | | | | | | | | | | | | | Attachment: 2 | | Exhibit: A | |
|---|---|---|---|---|---|---|---|---|---|---|---|---|---|---|---|---|---|
| CATEGORY | RATE ELEMENTS | Interim | Zone | BCS | USOC | RATES ($) | | | | | Svc Order Submitted Elec per LSR | Svc Order Submitted Manually per LSR | Incremental Charge - Manual Svc Order vs. Electronic-1st | Incremental Charge - Manual Svc Order vs. Electronic-Add'l | Incremental Charge - Manual Svc Order vs. Electronic-Disc 1st | Incremental Charge - Manual Svc Order vs. Electronic-Disc Add'l |
| | | | | | | Rec | Nonrecurring | | Nonrecurring Disconnect | | OSS Rates ($) | | | | | |
| | | | | | | | First | Add'l | First | Add'l | SOMEC | SOMAN | SOMAN | SOMAN | SOMAN | SOMAN |
| | Unbundled Remote Call Forwarding Service, IntraLATA - Res | | | UEPVR | UERTR | 1.49 | 3.74 | 3.63 | | | | | | | | |
| Non-Recurring | | | | | | | | | | | | | | | | |
| | Unbundled Remote Call Forwarding Service - Conversion - Switch-as-is | | | UEPVR | USAC2 | | 0.10 | 0.10 | | | | | | | | |
| | Unbundled Remote Call Forwarding Service - Conversion with allowed change (PIC and LPIC) | | | UEPVR | USACC | | 0.10 | 0.10 | | | | | | | | |
| UNBUNDLED REMOTE CALL FORWARDING - Bus | | | | | | | | | | | | | | | | |
| | Unbundled Remote Call Forwarding Service, Area Calling - Bus | | | UEPVB | UERAC | 1.49 | 3.74 | 3.63 | | | | | | | | |
| | Unbundled Remote Call Forwarding Service, Local Calling - Bus | | | UEPVB | UERLC | 1.49 | 3.74 | 3.63 | | | | | | | | |
| | Unbundled Remote Call Forwarding Service, InterLATA - Bus | | | UEPVB | UERTE | 1.49 | 3.74 | 3.63 | | | | | | | | |
| | Unbundled Remote Call Forwarding Service, IntraLATA - Bus | | | UEPVB | UERTR | 1.49 | 3.74 | 3.63 | | | | | | | | |
| | Unbundled Remote Call Forwarding Service Expanded and Exception Local Calling | | | UEPVB | UERVJ | 1.49 | 3.74 | 3.63 | | | | | | | | |
| Non-Recurring | | | | | | | | | | | | | | | | |
| | Unbundled Remote Call Forwarding Service - Conversion - Switch-as-is | | | UEPVB | USAC2 | | 0.10 | 0.10 | | | | | | | | |
| | Unbundled Remote Call Forwarding Service - Conversion with allowed change (PIC and LPIC) | | | UEPVB | USACC | | 0.10 | 0.10 | | | | | | | | |
| UNBUNDLED LOCAL SWITCHING, PORT USAGE | | | | | | | | | | | | | | | | |
| End Office Switching (Port Usage) | | | | | | | | | | | | | | | | |
| | End Office Switching Function, Per MOU | | | | | 0.0011971 | | | | | | | | | | |
| | End Office Trunk Port - Shared, Per MOU | | | | | 0.0002112 | | | | | | | | | | |
| Tandem Switching (Port Usage) (Local or Access Tandem) | | | | | | | | | | | | | | | | |
| | Tandem Switching Function Per MOU | | | | | 0.000194 | | | | | | | | | | |
| | Tandem Trunk Port - Shared, Per MOU | | | | | 0.0002416 | | | | | | | | | | |
| | Tandem Switching Function Per MOU (Melded) | | | | | 0.000094381 | | | | | | | | | | |
| | Tandem Trunk Port - Shared, Per MOU (Melded) | | | | | 0.000117538 | | | | | | | | | | |
| | Melded Factor: 48.65% of the Tandem Rate | | | | | | | | | | | | | | | |
| Common Transport | | | | | | | | | | | | | | | | |
| | Common Transport - Per Mile, Per MOU | | | | | 0.000003 | | | | | | | | | | |
| | Common Transport - Facilities Termination Per MOU | | | | | 0.0007466 | | | | | | | | | | |
| UNBUNDLED PORT/LOOP COMBINATIONS - COST BASED RATES | | | | | | | | | | | | | | | | |
| Cost Based Rates are applied where BellSouth is required by FCC and/or State Commission rule to provide Unbundled Local Switching or Switch Ports. | | | | | | | | | | | | | | | | |
| Features shall apply to the Unbundled Port/Loop Combination - Cost Based Rate section in the same manner as they are applied to the Stand-Alone Unbundled Port section of this Rate Exhibit. | | | | | | | | | | | | | | | | |
| End Office and Tandem Switching Usage and Common Transport Usage rates in the Port section of this rate exhibit shall apply to all combinations of loop/port network elements except for UNE Coin Port/Loop Combinations. | | | | | | | | | | | | | | | | |
| The first and additional Port nonrecurring charges apply to Not Currently Combined Combos. For Currently Combined Combos the nonrecurring charges shall be those identified in the Nonrecurring - Currently Combined sections. | | | | | | | | | | | | | | | | |
| 2-WIRE VOICE GRADE LOOP WITH 2-WIRE LINE PORT (RES) | | | | | | | | | | | | | | | | |
| UNE Port/Loop Combination Rates | | | | | | | | | | | | | | | | |
| | 2-Wire VG Loop/Port Combo - Zone 1 | | 1 | | | 10.79 | | | | | | | | | | |
| | 2-Wire VG Loop/Port Combo - Zone 2 | | 2 | | | 15.52 | | | | | | | | | | |
| | 2-Wire VG Loop/Port Combo - Zone 3 | | 3 | | | 31.74 | | | | | | | | | | |
| UNE Loop Rates | | | | | | | | | | | | | | | | |
| | 2-Wire Voice Grade Loop (SL1) - Zone 1 | | 1 | UEPRX | UEPLX | 9.64 | | | | | | | | | | |
| | 2-Wire Voice Grade Loop (SL1) - Zone 2 | | 2 | UEPRX | UEPLX | 14.37 | | | | | | | | | | |
| | 2-Wire Voice Grade Loop (SL1) - Zone 3 | | 3 | UEPRX | UEPLX | 30.59 | | | | | | | | | | |
| 2-Wire Voice Grade Line Port Rates (Res) | | | | | | | | | | | | | | | | |
| | 2-Wire voice unbundled port - residence | | | UEPRX | UEPRL | 1.15 | 21.29 | 15.49 | 2.85 | 2.67 | | | | | | |
| | 2-Wire voice unbundled port with Caller ID - res | | | UEPRX | UEPRC | 1.15 | 21.29 | 15.49 | 2.85 | 2.67 | | | | | | |
| | 2-Wire voice unbundled port outgoing only - res | | | UEPRX | UEPRO | 1.15 | 21.29 | 15.49 | 2.85 | 2.67 | | | | | | |
| | 2-Wire voice Grade unbundled Kentucky extended local dialing parity port with Caller ID - res | | | UEPRX | UEPRM | 1.15 | 21.29 | 15.49 | 2.85 | 2.67 | | | | | | |
| | 2-Wire voice unbundles res, low usage line port with Caller ID (LUM) | | | UEPRX | UEPAP | 1.15 | 21.29 | 15.49 | 2.85 | 2.67 | | | | | | |
| | 2-Wire Voice Unbundled Kentucky Residence Dialing Plan without Caller ID | | | UEPRX | UEPWE | 1.15 | 21.29 | 15.49 | 2.85 | 2.67 | | | | | | |
| | 2-Wire voice unbundled Low Usage Line Port without Caller ID Capability | | | UEPRX | UEPRT | 1.15 | 21.29 | 15.49 | 2.85 | 2.67 | | | | | | |

| UNBUNDLED NETWORK ELEMENTS - Kentucky | | | | | | | | | | | | | | Attachment: 2 | | Exhibit: A | |
|---|---|---|---|---|---|---|---|---|---|---|---|---|---|---|---|---|---|
| CATEGORY | RATE ELEMENTS | Interim | Zone | BCS | USOC | RATES ($) | | | | | Svc Order Submitted Elec per LSR | Svc Order Submitted Manually per LSR | Incremental Charge - Manual Svc Order vs. Electronic-1st | Incremental Charge - Manual Svc Order vs. Electronic-Add'l | Incremental Charge - Manual Svc Order vs. Electronic-Disc 1st | Incremental Charge - Manual Svc Order vs. Electronic-Disc Add'l |
| | | | | | | Rec | Nonrecurring | | Nonrecurring Disconnect | | OSS Rates ($) | | | | | |
| | | | | | | | First | Add'l | First | Add'l | SOMEC | SOMAN | SOMAN | SOMAN | SOMAN | SOMAN |
| FEATURES | | | | | | | | | | | | | | | | |
| | All Features Offered | | | UEPRX | UEPVF | 0.00 | 0.00 | 0.00 | | | | | | | | |
| LOCAL NUMBER PORTABILITY | | | | | | | | | | | | | | | | |
| | Local Number Portability (1 per port) | | | UEPRX | LNPCX | 0.35 | | | | | | | | | | |
| NONRECURRING CHARGES (NRCs) - CURRENTLY COMBINED | | | | | | | | | | | | | | | | |
| | 2-Wire Voice Grade Loop / Line Port Combination - Conversion - Switch-as-is | | | UEPRX | USAC2 | | 0.10 | 0.10 | | | | | | | | |
| | 2-Wire Voice Grade Loop / Line Port Combination - Conversion - Switch with change | | | UEPRX | USACC | | 0.10 | 0.10 | | | | | | | | |
| ADDITIONAL NRCs | | | | | | | | | | | | | | | | |
| | 2-Wire Voice Grade Loop/Line Port Combination - Subsequent Activity | | | UEPRX | USAS2 | 0.00 | 0.00 | 0.00 | | | | | | | | |
| | Unbundled Miscellaneous Rate Element, Tag Loop at End User Premise | | | UEPRX | URETL | | 8.33 | 0.83 | | | | | | | | |
| OFF/ON PREMISES EXTENSION CHANNELS | | | | | | | | | | | | | | | | |
| | 2 Wire Analog Voice Grade Extension Loop – Non-Design | | 1 | UEPRX | UEAEN | 10.56 | 46.66 | 22.57 | 26.65 | 7.65 | | | | | | |
| | 2 Wire Analog Voice Grade Extension Loop – Non-Design | | 2 | UEPRX | UEAEN | 15.34 | 46.66 | 22.57 | 26.65 | 7.65 | | | | | | |
| | 2 Wire Analog Voice Grade Extension Loop – Non-Design | | 3 | UEPRX | UEAEN | 31.11 | 46.66 | 22.57 | 26.65 | 7.65 | | | | | | |
| | 2 Wire Analog Voice Grade Extension Loop – Design | | 1 | UEPRX | UEAED | 12.67 | 134.89 | 81.87 | 73.65 | 14.88 | | | | | | |
| | 2 Wire Analog Voice Grade Extension Loop – Design | | 2 | UEPRX | UEAED | 17.45 | 134.89 | 81.87 | 73.65 | 14.88 | | | | | | |
| | 2 Wire Analog Voice Grade Extension Loop – Design | | 3 | UEPRX | UEAED | 33.22 | 134.89 | 81.87 | 73.65 | 14.88 | | | | | | |
| INTEROFFICE TRANSPORT | | | | | | | | | | | | | | | | |
| | Interoffice Transport - Dedicated - 2 Wire Voice Grade - Facility Termination | | | UEPRX | U1TV2 | 23.95 | 98.09 | 53.67 | 56.31 | 22.42 | | | | | | |
| | Interoffice Transport - Dedicated - 2 Wire Voice Grade - Per Mile or Fraction Mile | | | UEPRX | U1TVM | 0.0095 | 0.00 | 0.00 | | | | | | | | |
| 2-WIRE VOICE GRADE LOOP WITH 2-WIRE LINE PORT (BUS) | | | | | | | | | | | | | | | | |
| UNE Port/Loop Combination Rates | | | | | | | | | | | | | | | | |
| | 2-Wire VG Loop/Port Combo - Zone 1 | | 1 | | | 10.79 | | | | | | | | | | |
| | 2-Wire VG Loop/Port Combo - Zone 2 | | 2 | | | 15.52 | | | | | | | | | | |
| | 2-Wire VG Loop/Port Combo - Zone 3 | | 3 | | | 31.74 | | | | | | | | | | |
| UNE Loop Rates | | | | | | | | | | | | | | | | |
| | 2-Wire Voice Grade Loop (SL1) - Zone 1 | | 1 | UEPBX | UEPLX | 9.64 | | | | | | | | | | |
| | 2-Wire Voice Grade Loop (SL1) - Zone 2 | | 2 | UEPBX | UEPLX | 14.37 | | | | | | | | | | |
| | 2-Wire Voice Grade Loop (SL1) - Zone 3 | | 3 | UEPBX | UEPLX | 30.59 | | | | | | | | | | |
| 2-Wire Voice Grade Line Port (Bus) | | | | | | | | | | | | | | | | |
| | 2-Wire voice unbundled port without Caller ID - bus | | | UEPBX | UEPBL | 1.15 | 21.29 | 15.49 | 2.85 | 2.67 | | | | | | |
| | 2-Wire voice unbundled port with Caller + E484 ID - bus | | | UEPBX | UEPBC | 1.15 | 21.29 | 15.49 | 2.85 | 2.67 | | | | | | |
| | 2-Wire voice unbundled port outgoing only - bus | | | UEPBX | UEPBO | 1.15 | 21.29 | 15.49 | 2.85 | 2.67 | | | | | | |
| | 2-Wire voice Grade unbundled Kentucky extended local dialing parity port with Caller ID - bus | | | UEPBX | UEPBM | 1.15 | 21.29 | 15.49 | 2.85 | 2.67 | | | | | | |
| | 2-Wire voice unbundled incoming only port with Caller ID - Bus | | | UEPBX | UEPB1 | 1.15 | 21.29 | 15.49 | 2.85 | 2.67 | | | | | | |
| | 2-Wire Voice Unbundled Kentucky Business Dialing Plan without Caller ID | | | UEPBX | UEPWF | 1.15 | 21.29 | 15.49 | 2.85 | 2.67 | | | | | | |
| | 2-Wire voice unbundled Incoming Only Port without Caller ID Capability | | | UEPBX | UEPBE | 1.15 | 21.29 | 15.49 | 2.85 | 2.67 | | | | | | |
| LOCAL NUMBER PORTABILITY | | | | | | | | | | | | | | | | |
| | Local Number Portability (1 per port) | | | UEPBX | LNPCX | 0.35 | | | | | | | | | | |
| FEATURES | | | | | | | | | | | | | | | | |
| | All Features Offered | | | UEPBX | UEPVF | 0.00 | 0.00 | 0.00 | | | | | | | | |
| NONRECURRING CHARGES (NRCs) - CURRENTLY COMBINED | | | | | | | | | | | | | | | | |
| | 2-Wire Voice Grade Loop / Line Port Combination - Conversion - Switch-as-is | | | UEPBX | USAC2 | | 0.10 | 0.10 | | | | | | | | |
| | 2-Wire Voice Grade Loop / Line Port Combination - Conversion - Switch with change | | | UEPBX | USACC | | 0.10 | 0.10 | | | | | | | | |
| ADDITIONAL NRCs | | | | | | | | | | | | | | | | |
| | 2-Wire Voice Grade Loop/Line Port Combination - Subsequent Activity | | | UEPBX | USAS2 | | 0.00 | 0.00 | | | | | | | | |

## UNBUNDLED NETWORK ELEMENTS - Kentucky

| CATEGORY | RATE ELEMENTS | Interim | Zone | BCS | USOC | RATES ($) | | | | | Svc Order Submitted Elec per LSR | Svc Order Submitted Manually per LSR | Attachment: 2 | | Exhibit: A | |
|---|---|---|---|---|---|---|---|---|---|---|---|---|---|---|---|---|
| | | | | | | | | | | | | | Incremental Charge - Manual Svc Order vs. Electronic-1st | Incremental Charge - Manual Svc Order vs. Electronic-Add'l | Incremental Charge - Manual Svc Order vs. Electronic-Disc 1st | Incremental Charge - Manual Svc Order vs. Electronic-Disc Add'l |
| | | | | | | Rec | Nonrecurring | | Nonrecurring Disconnect | | OSS Rates ($) | | | | | |
| | | | | | | | First | Add'l | First | Add'l | SOMEC | SOMAN | SOMAN | SOMAN | SOMAN | SOMAN |
| | Unbundled Miscellaneous Rate Element, Tag Loop at End User Premise | | | UEPBX | URETL | | 8.33 | 0.83 | | | | | | | | |
| | **OFF/ON PREMISES EXTENSION CHANNELS** | | | | | | | | | | | | | | | |
| | 2 Wire Analog Voice Grade Extension Loop – Non-Design | | 1 | UEPBX | UEAEN | 10.56 | 46.66 | 22.57 | 26.65 | 7.65 | | | | | | |
| | 2 Wire Analog Voice Grade Extension Loop – Non-Design | | 2 | UEPBX | UEAEN | 15.34 | 46.66 | 22.57 | 26.65 | 7.65 | | | | | | |
| | 2 Wire Analog Voice Grade Extension Loop – Non-Design | | 3 | UEPBX | UEAEN | 31.11 | 46.66 | 22.57 | 26.65 | 7.65 | | | | | | |
| | 2 Wire Analog Voice Grade Extension Loop – Design | | 1 | UEPBX | UEAED | 12.67 | 134.89 | 81.87 | 73.65 | 14.88 | | | | | | |
| | 2 Wire Analog Voice Grade Extension Loop – Design | | 2 | UEPBX | UEAED | 17.45 | 134.89 | 81.87 | 73.65 | 14.88 | | | | | | |
| | 2 Wire Analog Voice Grade Extension Loop – Design | | 3 | UEPBX | UEAED | 33.22 | 134.89 | 81.87 | 73.65 | 14.88 | | | | | | |
| | **INTEROFFICE TRANSPORT** | | | | | | | | | | | | | | | |
| | Interoffice Transport - Dedicated - 2 Wire Voice Grade - Facility Termination | | | UEPBX | U1TV2 | 23.95 | 98.09 | 53.67 | 56.31 | 22.42 | | | | | | |
| | Interoffice Transport - Dedicated - 2 Wire Voice Grade - Per Mile or Fraction Mile | | | UEPBX | U1TVM | 0.0095 | 0.00 | 0.00 | | | | | | | | |
| | **2-WIRE VOICE GRADE LOOP WITH 2-WIRE LINE PORT (RES - PBX)** | | | | | | | | | | | | | | | |
| | **UNE Port/Loop Combination Rates** | | | | | | | | | | | | | | | |
| | 2-Wire VG Loop/Port Combo - Zone 1 | | 1 | | | 10.79 | | | | | | | | | | |
| | 2-Wire VG Loop/Port Combo - Zone 2 | | 2 | | | 15.52 | | | | | | | | | | |
| | 2-Wire VG Loop/Port Combo - Zone 3 | | 3 | | | 31.74 | | | | | | | | | | |
| | **UNE Loop Rates** | | | | | | | | | | | | | | | |
| | 2-Wire Voice Grade Loop (SL 1) - Zone 1 | | 1 | UEPRG | UEPLX | 9.64 | | | | | | | | | | |
| | 2-Wire Voice Grade Loop (SL 1) - Zone 2 | | 2 | UEPRG | UEPLX | 14.37 | | | | | | | | | | |
| | 2-Wire Voice Grade Loop (SL 1) - Zone 3 | | 3 | UEPRG | UEPLX | 30.59 | | | | | | | | | | |
| | **2-Wire Voice Grade Line Port Rates (RES - PBX)** | | | | | | | | | | | | | | | |
| | 2-Wire VG Unbundled Combination 2-Way PBX Trunk Port - Res | | | UEPRG | UEPRD | 1.15 | 21.29 | 15.49 | 2.85 | 2.67 | | | | | | |
| | **LOCAL NUMBER PORTABILITY** | | | | | | | | | | | | | | | |
| | Local Number Portability (1 per port) | | | UEPRG | LNPCP | 3.15 | 0.00 | 0.00 | | | | | | | | |
| | **FEATURES** | | | | | | | | | | | | | | | |
| | All Features Offered | | | UEPRG | UEPVF | 0.00 | 0.00 | 0.00 | | | | | | | | |
| | **NONRECURRING CHARGES (NRCs) - CURRENTLY COMBINED** | | | | | | | | | | | | | | | |
| | 2-Wire Voice Grade Loop/ Line Port Combination (PBX) - Conversion - Switch-As-Is | | | UEPRG | USAC2 | | 8.45 | 1.91 | | | | | | | | |
| | 2-Wire Voice Grade Loop/ Line Port Combination (PBX) - Conversion - Switch with Change | | | UEPRG | USACC | | 8.45 | 1.91 | | | | | | | | |
| | **ADDITIONAL NRCs** | | | | | | | | | | | | | | | |
| | 2-Wire Voice Grade Loop/ Line Port Combination (PBX) - Subsequent Activity | | | UEPRG | USAS2 | 0.00 | 0.00 | 0.00 | | | | | | | | |
| | PBX Subsequent Activity - Change/Rearrange Multiline Hunt Group | | | | | | 7.86 | 7.86 | | | | | | | | |
| | Unbundled Miscellaneous Rate Element, Tag Loop at End User Premise | | | UEPRG | URETL | | 8.33 | 0.83 | | | | | | | | |
| | **OFF/ON PREMISES EXTENSION CHANNELS** | | | | | | | | | | | | | | | |
| | Local Channel Voice grade, per termination | | 1 | UEPRG | P2JHX | 12.67 | 134.89 | 81.87 | 73.65 | 14.88 | | | | | | |
| | Local Channel Voice grade, per termination | | 2 | UEPRG | P2JHX | 17.45 | 134.89 | 81.87 | 73.65 | 14.88 | | | | | | |
| | Local Channel Voice grade, per termination | | 3 | UEPRG | P2JHX | 33.22 | 134.89 | 81.87 | 73.65 | 14.88 | | | | | | |
| | Non-Wire Direct Serve Channel Voice Grade | | 1 | UEPRG | SDD2X | 12.68 | 170.06 | 78.10 | 119.62 | 15.80 | | | | | | |
| | Non-Wire Direct Serve Channel Voice Grade | | 2 | UEPRG | SDD2X | 18.12 | 170.06 | 78.10 | 119.62 | 15.80 | | | | | | |
| | Non-Wire Direct Serve Channel Voice Grade | | 3 | UEPRG | SDD2X | 29.64 | 170.06 | 78.10 | 119.62 | 15.00 | | | | | | |
| | **INTEROFFICE TRANSPORT** | | | | | | | | | | | | | | | |
| | Interoffice Transport - Dedicated - 2 Wire Voice Grade - Facility Termination | | | UEPRG | U1TV2 | 23.95 | 98.09 | 53.67 | 56.31 | 22.42 | | | | | | |
| | Interoffice Transport - Dedicated - 2 Wire Voice Grade - Per Mile or Fraction Mile | | | UEPRG | U1TVM | 0.0095 | 0.00 | 0.00 | | | | | | | | |
| | **2-WIRE VOICE GRADE LOOP WITH 2-WIRE LINE PORT (BUS - PBX)** | | | | | | | | | | | | | | | |
| | **UNE Port/Loop Combination Rates** | | | | | | | | | | | | | | | |
| | 2-Wire VG Loop/Port Combo - Zone 1 | | 1 | | | 10.79 | | | | | | | | | | |
| | 2-Wire VG Loop/Port Combo - Zone 2 | | 2 | | | 15.52 | | | | | | | | | | |
| | 2-Wire VG Loop/Port Combo - Zone 3 | | 3 | | | 31.74 | | | | | | | | | | |

## UNBUNDLED NETWORK ELEMENTS - Kentucky

| CATEGORY | RATE ELEMENTS | Interim | Zone | BCS | USOC | RATES ($) | | | | | Svc Order Submitted Elec per LSR | Svc Order Submitted Manually per LSR | Attachment: 2 Incremental Charge - Manual Svc Order vs. Electronic-1st | Attachment: 2 Incremental Charge - Manual Svc Order vs. Electronic-Add'l | Exhibit: A Incremental Charge - Manual Svc Order vs. Electronic-Disc 1st | Exhibit: A Incremental Charge - Manual Svc Order vs. Electronic-Disc Add'l |
|---|---|---|---|---|---|---|---|---|---|---|---|---|---|---|---|---|
| | | | | | | Rec | Nonrecurring | | Nonrecurring Disconnect | | OSS Rates ($) | | | | | |
| | | | | | | | First | Add'l | First | Add'l | SOMEC | SOMAN | SOMAN | SOMAN | SOMAN | SOMAN |
| **UNE Loop Rates** | | | | | | | | | | | | | | | | |
| | 2-Wire Voice Grade Loop (SL 1) - Zone 1 | | 1 | UEPPX | UEPLX | 9.64 | | | | | | | | | | |
| | 2-Wire Voice Grade Loop (SL 1) - Zone 2 | | 2 | UEPPX | UEPLX | 14.37 | | | | | | | | | | |
| | 2-Wire Voice Grade Loop (SL 1) - Zone 3 | | 3 | UEPPX | UEPLX | 30.59 | | | | | | | | | | |
| **2-Wire Voice Grade Line Port Rates (BUS - PBX)** | | | | | | | | | | | | | | | | |
| | Line Side Unbundled Combination 2-Way PBX Trunk Port - Bus | | | UEPPX | UEPPC | 1.15 | 21.29 | 15.49 | 2.85 | 2.67 | | | | | | |
| | Line Side Unbundled Outward PBX Trunk Port - Bus | | | UEPPX | UEPPO | 1.15 | 21.29 | 15.49 | 2.85 | 2.67 | | | | | | |
| | Line Side Unbundled Incoming PBX Trunk Port - Bus | | | UEPPX | UEPP1 | 1.15 | 21.29 | 15.49 | 2.85 | 2.67 | | | | | | |
| | 2-Wire Voice Unbundled OutDial Alabama NAR Area Calling Port | | | UEPPX | UEPOA | | | | | | | | | | | |
| | 2-Wire Voice Unbundled PBX LD Terminal Ports | | | UEPPX | UEPLD | 1.15 | 21.29 | 15.49 | 2.85 | 2.67 | | | | | | |
| | 2-Wire Voice Unbundled 2-Way Combination PBX Usage Port | | | UEPPX | UEPXA | 1.15 | 21.29 | 15.49 | 2.85 | 2.67 | | | | | | |
| | 2-Wire Voice Unbundled PBX Toll Terminal Hotel Ports | | | UEPPX | UEPXB | 1.15 | 21.29 | 15.49 | 2.85 | 2.67 | | | | | | |
| | 2-Wire Voice Unbundled PBX LD DDD Terminals Port | | | UEPPX | UEPXC | 1.15 | 21.29 | 15.49 | 2.85 | 2.67 | | | | | | |
| | 2-Wire Voice Unbundled PBX LD Terminal Switchboard Port | | | UEPPX | UEPXD | 1.15 | 21.29 | 15.49 | 2.85 | 2.67 | | | | | | |
| | 2-Wire Voice Unbundled PBX LD Terminal Switchboard IDD Capable Port | | | UEPPX | UEPXE | 1.15 | 21.29 | 15.49 | 2.85 | 2.67 | | | | | | |
| | 2-Wire Voice Unbundled 2-Way PBX Kentucky Room Area Calling Port without LUD | | | UEPPX | UEPXF | 1.15 | 21.29 | 15.49 | 2.85 | 2.67 | | | | | | |
| | 2-Wire Voice Unbundled PBX Kentucky LUD Area Calling Port | | | UEPPX | UEPXG | 1.15 | 21.29 | 15.49 | 2.85 | 2.67 | | | | | | |
| | 2-Wire Voice Unbundled PBX Kentucky Premium Calling Port | | | UEPPX | UEPXH | 1.15 | 21.29 | 15.49 | 2.85 | 2.67 | | | | | | |
| | 2-Wire Voice Unbundled 2-Way Kentucky Area Calling Port without LUD | | | UEPPX | UEPXJ | 1.15 | 21.29 | 15.49 | 2.85 | 2.67 | | | | | | |
| | 2-Wire Voice Unbundled OutDial Kentucky NAR Area Calling Port | | | UEPPX | UEPOK | 1.15 | 21.29 | 15.49 | 2.85 | 2.67 | | | | | | |
| | 2-Wire Voice Unbundled 2-Way PBX Hotel/Hospital Economy Administrative Calling Port | | | UEPPX | UEPXL | 1.15 | 21.29 | 15.49 | 2.85 | 2.67 | | | | | | |
| | 2-Wire Voice Unbundled 2-Way PBX Hotel/Hospital Economy Room Calling Port | | | UEPPX | UEPXM | 1.15 | 21.29 | 15.49 | 2.85 | 2.67 | | | | | | |
| | 2-Wire Voice Unbundled 1-Way Outgoing PBX Hotel/Hospital Discount Room Calling Port | | | UEPPX | UEPXO | 1.15 | 21.29 | 15.49 | 2.85 | 2.67 | | | | | | |
| | 2-Wire Voice Unbundled 1-Way Outgoing PBX Measured Port | | | UEPPX | UEPXS | 1.15 | 21.29 | 15.49 | 2.85 | 2.67 | | | | | | |
| **LOCAL NUMBER PORTABILITY** | | | | | | | | | | | | | | | | |
| | Local Number Portability (1 per port) | | | UEPPX | LNPCP | 3.15 | 0.00 | 0.00 | | | | | | | | |
| **FEATURES** | | | | | | | | | | | | | | | | |
| | All Features Offered | | | UEPPX | UEPVF | 0.00 | 0.00 | 0.00 | | | | | | | | |
| **NONRECURRING CHARGES (NRCs) - CURRENTLY COMBINED** | | | | | | | | | | | | | | | | |
| | 2-Wire Voice Grade Loop/ Line Port Combination (PBX) - Conversion - Switch-As-Is | | | UEPPX | USAC2 | | 8.45 | 1.91 | | | | | | | | |
| | 2-Wire Voice Grade Loop/ Line Port Combination (PBX) - Conversion - Switch with Change | | | UEPPX | USACC | | 8.45 | 1.91 | | | | | | | | |
| **ADDITIONAL NRCs** | | | | | | | | | | | | | | | | |
| | 2-Wire Voice Grade Loop/ Line Port Combination (PBX) - Subsequent Activity | | | UEPPX | USAS2 | 0.00 | 0.00 | 0.00 | | | | | | | | |
| | PBX Subsequent Activity - Change/Rearrange Multiline Hunt Group | | | | | | 7.86 | 7.86 | | | | | | | | |
| | Unbundled Miscellaneous Rate Element, Tag Loop at End User Premise | | | UEPPX | URETL | | 8.33 | 0.83 | | | | | | | | |
| **OFF/ON PREMISES EXTENSION CHANNELS** | | | | | | | | | | | | | | | | |
| | Local Channel Voice grade, per termination | | 1 | UEPPX | P2JHX | 12.67 | 134.89 | 81.87 | 73.65 | 14.88 | | | | | | |
| | Local Channel Voice grade, per termination | | 2 | UEPPX | P2JHX | 17.45 | 134.89 | 81.87 | 73.65 | 14.88 | | | | | | |
| | Local Channel Voice grade, per termination | | 3 | UEPPX | P2JHX | 33.22 | 134.89 | 81.87 | 73.65 | 14.88 | | | | | | |
| | Non-Wire Direct Serve Channel Voice Grade | | 1 | UEPPX | SDD2X | 12.68 | 170.06 | 78.10 | 119.62 | 15.80 | | | | | | |
| | Non-Wire Direct Serve Channel Voice Grade | | 2 | UEPPX | SDD2X | 18.12 | 170.06 | 78.10 | 119.62 | 15.80 | | | | | | |
| | Non-Wire Direct Serve Channel Voice Grade | | 3 | UEPPX | SDD2X | 29.64 | 170.06 | 78.10 | 119.62 | 15.00 | | | | | | |
| **INTEROFFICE TRANSPORT** | | | | | | | | | | | | | | | | |
| | Interoffice Transport - Dedicated - 2 Wire Voice Grade - Facility Termination | | | UEPPX | U1TV2 | 23.95 | 98.09 | 53.67 | 56.31 | 22.42 | | | | | | |

## UNBUNDLED NETWORK ELEMENTS - Kentucky

| CATEGORY | RATE ELEMENTS | Interim | Zone | BCS | USOC | RATES ($) | | | | | Svc Order Submitted Elec per LSR | Svc Order Submitted Manually per LSR | Attachment: 2 Incremental Charge - Manual Svc Order vs. Electronic-1st | Attachment: 2 Incremental Charge - Manual Svc Order vs. Electronic-Add'l | Exhibit: A Incremental Charge - Manual Svc Order vs. Electronic-Disc 1st | Exhibit: A Incremental Charge - Manual Svc Order vs. Electronic-Disc Add'l |
|---|---|---|---|---|---|---|---|---|---|---|---|---|---|---|---|---|
| | | | | | | Rec | Nonrecurring | | Nonrecurring Disconnect | | OSS Rates ($) | | | | | |
| | | | | | | | First | Add'l | First | Add'l | SOMEC | SOMAN | SOMAN | SOMAN | SOMAN | SOMAN |
| | Interoffice Transport - Dedicated - 2 Wire Voice Grade - Per Mile or Fraction Mile | | | UEPPX | U1TVM | 0.0095 | 0.00 | 0.00 | | | | | | | | |
| | **2-WIRE VOICE GRADE LOOP WITH 2-WIRE ANALOG LINE COIN PORT** | | | | | | | | | | | | | | | |
| | **UNE Port/Loop Combination Rates** | | | | | | | | | | | | | | | |
| | 2-Wire VG Coin Port/Loop Combo – Zone 1 | | 1 | | | 10.79 | | | | | | | | | | |
| | 2-Wire VG Coin Port/Loop Combo – Zone 2 | | 2 | | | 15.52 | | | | | | | | | | |
| | 2-Wire VG Coin Port/Loop Combo – Zone 3 | | 3 | | | 31.74 | | | | | | | | | | |
| | **UNE Loop Rates** | | | | | | | | | | | | | | | |
| | 2-Wire Voice Grade Loop (SL1) - Zone 1 | | 1 | UEPCO | UEPLX | 9.64 | | | | | | | | | | |
| | 2-Wire Voice Grade Loop (SL1) - Zone 2 | | 2 | UEPCO | UEPLX | 14.37 | | | | | | | | | | |
| | 2-Wire Voice Grade Loop (SL1) - Zone 3 | | 3 | UEPCO | UEPLX | 30.59 | | | | | | | | | | |
| | **2-Wire Voice Grade Line Ports (COIN)** | | | | | | | | | | | | | | | |
| | 2-Wire Coin 2-Way without Operator Screening and without Blocking (AL, KY, LA, MS) | | | UEPCO | UEPRF | 1.15 | 21.29 | 15.49 | 2.85 | 2.67 | | | | | | |
| | 2-Wire Coin 2-Way with Operator Screening (AL, KY) | | | UEPCO | UEPRE | 1.15 | 21.29 | 15.49 | 2.85 | 2.67 | | | | | | |
| | 2-Wire Coin 2-Way with Operator Screening and Blocking: 011, 900/976, 1+DDD (AL, KY, LA, MS) | | | UEPCO | UEPRA | 1.15 | 21.29 | 15.49 | 2.85 | 2.67 | | | | | | |
| | 2-Wire Coin 2-Way with Operator Screening and 011 Blocking (KY) | | | UEPCO | UEPKA | 1.15 | 21.29 | 15.49 | 2.85 | 2.67 | | | | | | |
| | 2-Wire Coin 2-Way with Operator Screening & Blocking: 900/976, 1+DDD, 011+, & Local (AL, KY, LA, MS) | | | UEPCO | UEPCD | 1.15 | 21.29 | 15.49 | 2.85 | 2.67 | | | | | | |
| | 2-Wire Coin Outward without Blocking and without Operator Screening (KY, LA, MS) | | | UEPCO | UEPRN | 1.15 | 21.29 | 15.49 | 2.85 | 2.67 | | | | | | |
| | 2-Wire Coin Outward with Operator Screening and 011 Blocking (GA, KY, MS) | | | UEPCO | UEPRJ | 1.15 | 21.29 | 15.49 | 2.85 | 2.67 | | | | | | |
| | 2-Wire Coin Outward with Operator Screening and Blocking: 011, 900/976, 1+DDD (AL, KY, LA, MS) | | | UEPCO | UEPRH | 1.15 | 21.29 | 15.49 | 2.85 | 2.67 | | | | | | |
| | 2-Wire Coin Outward Operator Screening & Blocking: 900/976, 1+DDD, 011+, and Local (AL, KY, LA, MS) | | | UEPCO | UEPCN | 1.15 | 21.29 | 15.49 | 2.85 | 2.67 | | | | | | |
| | 2-Wire 2-Way Smartline with 900/976 (all states except LA) | | | UEPCO | UEPCK | 1.15 | 21.29 | 15.49 | 2.85 | 2.67 | | | | | | |
| | 2-Wire Coin Outward Smartline with 900/976 (all states except LA) | | | UEPCO | UEPCR | 1.15 | 21.29 | 15.49 | 2.85 | 2.67 | | | | | | |
| | **ADDITIONAL UNE COIN PORT/LOOP (RC)** | | | | | | | | | | | | | | | |
| | UNE Coin Port/Loop Combo Usage (Flat Rate) | | | UEPCO | URECU | 2.57 | 0.00 | 0.00 | 0.00 | 0.00 | | | | | | |
| | **LOCAL NUMBER PORTABILITY** | | | | | | | | | | | | | | | |
| | Local Number Portability (1 per port) | | | UEPCO | LNPCX | 0.35 | | | | | | | | | | |
| | **NONRECURRING CHARGES - CURRENTLY COMBINED** | | | | | | | | | | | | | | | |
| | 2-Wire Voice Grade Loop / Line Port Combination - Conversion - Switch-as-is | | | UEPCO | USAC2 | | 0.10 | 0.10 | | | | | | | | |
| | 2-Wire Voice Grade Loop / Line Port Combination - Conversion - Switch with change | | | UEPCO | USACC | | 0.10 | 0.10 | | | | | | | | |
| | **ADDITIONAL NRCs** | | | | | | | | | | | | | | | |
| | 2-Wire Voice Grade Loop/Line Port Combination - Subsequent Activity | | | UEPCO | USAS2 | | 0.00 | 0.00 | | | | | | | | |
| | Unbundled Miscellaneous Rate Element, Tag Loop at End User Premise | | | UEPCO | URETL | | 8.33 | 0.83 | | | | | | | | |
| | **2-WIRE VOICE LOOP/ 2WIRE VOICE GRADE IO TRANSPORT/ 2-WIRE LINE PORT (RES)** | | | | | | | | | | | | | | | |
| | **UNE Port/Loop Combination Rates** | | | | | | | | | | | | | | | |
| | 2-Wire VG Loop/IO Tranport/Port Combo - Zone 1 | | 1 | | | 13.90 | | | | | | | | | | |
| | 2-Wire VG Loop/IO Tranport/Port Combo - Zone 2 | | 2 | | | 18.68 | | | | | | | | | | |
| | 2-Wire VG Loop/IO Tranport/Port Combo - Zone 3 | | 3 | | | 34.45 | | | | | | | | | | |
| | **UNE Loop Rates** | | | | | | | | | | | | | | | |
| | 2-Wire Voice Grade Loop (SL2) - Zone 1 | | 1 | UEPFR | UECF2 | 12.67 | | | | | | | | | | |
| | 2-Wire Voice Grade Loop (SL2) - Zone 2 | | 2 | UEPFR | UECF2 | 17.45 | | | | | | | | | | |
| | 2-Wire Voice Grade Loop (SL2) - Zone 3 | | 3 | UEPFR | UECF2 | 33.22 | | | | | | | | | | |
| | **2-Wire Voice Grade Line Port Rates (Res)** | | | | | | | | | | | | | | | |
| | 2-Wire voice unbundled port - residence | | | UEPFR | UEPRL | 1.23 | 128.96 | 64.11 | 61.92 | 9.97 | | | | | | |
| | 2-Wire voice unbundled port with Caller ID - res | | | UEPFR | UEPRC | 1.23 | 128.96 | 64.11 | 61.92 | 9.97 | | | | | | |
| | 2-Wire voice unbundled port outgoing only - res | | | UEPFR | UEPRO | 1.23 | 128.96 | 64.11 | 61.92 | 9.97 | | | | | | |

## UNBUNDLED NETWORK ELEMENTS - Kentucky

| CATEGORY | RATE ELEMENTS | Interim | Zone | BCS | USOC | RATES ($) | | | | | Svc Order Submitted Elec per LSR | Svc Order Submitted Manually per LSR | Attachment: 2 Incremental Charge - Manual Svc Order vs. Electronic-1st | Attachment: 2 Incremental Charge - Manual Svc Order vs. Electronic-Add'l | Exhibit: A Incremental Charge - Manual Svc Order vs. Electronic-Disc 1st | Exhibit: A Incremental Charge - Manual Svc Order vs. Electronic-Disc Add'l |
|---|---|---|---|---|---|---|---|---|---|---|---|---|---|---|---|---|
| | | | | | | Rec | Nonrecurring | | Nonrecurring Disconnect | | OSS Rates ($) | | | | | |
| | | | | | | | First | Add'l | First | Add'l | SOMEC | SOMAN | SOMAN | SOMAN | SOMAN | SOMAN |
| | 2-Wire voice Grade unbundled Kentucky extended local dialing parity port with Caller ID - res | | | UEPFR | UEPRM | 1.23 | 128.96 | 64.11 | 61.92 | 9.97 | | | | | | |
| | 2-Wire voice unbundles res, low usage line port with Caller ID (LUM) | | | UEPFR | UEPAP | 1.23 | 128.96 | 64.11 | 61.92 | 9.97 | | | | | | |
| | 2-Wire Voice Unbundled Kentucky Residence Dialing Plan without Caller ID | | | UEPFR | UEPWE | 1.23 | 128.96 | 64.11 | 61.92 | 9.97 | | | | | | |
| **INTEROFFICE TRANSPORT** | | | | | | | | | | | | | | | | |
| | Interoffice Transport - Dedicated - 2 Wire Voice Grade - Facility Termination | | | UEPFR | U1TV2 | 23.95 | 98.09 | 53.67 | 56.31 | 22.42 | | | | | | |
| | Interoffice Transport - Dedicated - 2 Wire Voice Grade - Per Mile or Fraction Mile | | | UEPFR | 1L5XX | 0.0095 | | | | | | | | | | |
| **FEATURES** | | | | | | | | | | | | | | | | |
| | All Features Offered | | | UEPFR | UEPVF | 0.00 | 0.00 | 0.00 | | | | | | | | |
| **LOCAL NUMBER PORTABILITY** | | | | | | | | | | | | | | | | |
| | Local Number Portability (1 per port) | | | UEPFR | LNPCX | 0.35 | | | | | | | | | | |
| **NONRECURRING CHARGES (NRCs) - CURRENTLY COMBINED** | | | | | | | | | | | | | | | | |
| | 2-Wire Loop / Dedicated IO Transport / 2 Wire Line Port Combination - Conversion - Switch-as-is | | | UEPFR | USAC2 | | 9.03 | 1.87 | | | | | | | | |
| | 2-Wire Loop / Dedicated IO Transport / 2 Wire Line Port Combination - Conversion - Switch-With-Change | | | UEPFR | USACC | | 9.03 | 1.87 | | | | | | | | |
| | Unbundled Miscellaneous Rate Element, Tag Designed Loop at End User Premise | | | UEPFR | URETN | | 11.21 | 1.10 | | | | | | | | |
| **2-WIRE VOICE LOOP/ 2WIRE VOICE GRADE IO TRANSPORT/ 2-WIRE LINE PORT (BUS)** | | | | | | | | | | | | | | | | |
| **UNE Port/Loop Combination Rates** | | | | | | | | | | | | | | | | |
| | 2-Wire VG Loop/IO Tranport/Port Combo - Zone 1 | | 1 | | | 13.90 | | | | | | | | | | |
| | 2-Wire VG Loop/IO Tranport/Port Combo - Zone 2 | | 2 | | | 18.68 | | | | | | | | | | |
| | 2-Wire VG Loop/IO Tranport/Port Combo - Zone 3 | | 3 | | | 34.45 | | | | | | | | | | |
| **UNE Loop Rates** | | | | | | | | | | | | | | | | |
| | 2-Wire Voice Grade Loop (SL2) - Zone 1 | | 1 | UEPFB | UECF2 | 12.67 | | | | | | | | | | |
| | 2-Wire Voice Grade Loop (SL2) - Zone 2 | | 2 | UEPFB | UECF2 | 17.45 | | | | | | | | | | |
| | 2-Wire Voice Grade Loop (SL2) - Zone 3 | | 3 | UEPFB | UECF2 | 33.22 | | | | | | | | | | |
| **2-Wire Voice Grade Line Port (Bus)** | | | | | | | | | | | | | | | | |
| | 2-Wire voice unbundled port without Caller ID - bus | | | UEPFB | UEPBL | 1.23 | 128.96 | 64.11 | 61.92 | 9.97 | | | | | | |
| | 2-Wire voice unbundled port with Caller + E484 ID - bus | | | UEPFB | UEPBC | 1.23 | 128.96 | 64.11 | 61.92 | 9.97 | | | | | | |
| | 2-Wire voice unbundled port outgoing only - bus | | | UEPFB | UEPBO | 1.23 | 128.96 | 64.11 | 61.92 | 9.97 | | | | | | |
| | 2-Wire voice Grade unbundled Kentucky extended local dialing parity port with Caller ID - bus | | | UEPFB | UEPBM | 1.23 | 128.96 | 64.11 | 61.92 | 9.97 | | | | | | |
| | 2-Wire voice unbundled incoming only port with Caller ID - Bus | | | UEPFB | UEPB1 | 1.23 | 128.96 | 64.11 | 61.92 | 9.97 | | | | | | |
| | 2-Wire Voice Unbundled Kentucky Business Dialing Plan without Caller ID | | | UEPFB | UEPWF | 1.23 | 128.96 | 64.11 | 61.92 | 9.97 | | | | | | |
| **LOCAL NUMBER PORTABILITY** | | | | | | | | | | | | | | | | |
| | Local Number Portability (1 per port) | | | UEPFB | LNPCX | 0.35 | | | | | | | | | | |
| **INTEROFFICE TRANSPORT** | | | | | | | | | | | | | | | | |
| | Interoffice Transport - Dedicated - 2 Wire Voice Grade - Facility Termination | | | UEPFB | U1TV2 | 23.95 | 98.09 | 53.67 | 56.31 | 22.42 | | | | | | |
| | Interoffice Transport - Dedicated - 2 Wire Voice Grade - Per Mile or Fraction Mile | | | UEPFB | 1L5XX | 0.0095 | | | | | | | | | | |
| **FEATURES** | | | | | | | | | | | | | | | | |
| | All Features Offered | | | UEPFB | UEPVF | 0.00 | 0.00 | 0.00 | | | | | | | | |
| **NONRECURRING CHARGES (NRCs) - CURRENTLY COMBINED** | | | | | | | | | | | | | | | | |
| | 2-Wire Loop / Dedicated IO Transport / 2 Wire Line Port Combination - Conversion - Switch-as-is | | | UEPFB | USAC2 | | 9.03 | 1.87 | | | | | | | | |
| | 2-Wire Loop / Dedicated IO Transport / 2 Wire Line Port Combination - Conversion - Switch with change | | | UEPFB | USACC | | 9.03 | 1.87 | | | | | | | | |
| | Unbundled Miscellaneous Rate Element, Tag Designed Loop at End User Premise | | | UEPFB | URETN | | 11.21 | 1.10 | | | | | | | | |
| **2-WIRE VOICE LOOP/ 2WIRE VOICE GRADE IO TRANSPORT/ 2-WIRE LINE PORT (PBX)** | | | | | | | | | | | | | | | | |
| **UNE Port/Loop Combination Rates** | | | | | | | | | | | | | | | | |
| | 2-Wire VG Loop/IO Tranport/Port Combo - Zone 1 | | 1 | | | 13.90 | | | | | | | | | | |

CCCS 265 of 1253

## UNBUNDLED NETWORK ELEMENTS - Kentucky

| CATEGORY | RATE ELEMENTS | Interim | Zone | BCS | USOC | RATES ($) | | | | | Svc Order Submitted Elec per LSR | Svc Order Submitted Manually per LSR | Attachment: 2 Incremental Charge - Manual Svc Order vs. Electronic-1st | Attachment: 2 Incremental Charge - Manual Svc Order vs. Electronic-Add'l | Exhibit: A Incremental Charge - Manual Svc Order vs. Electronic-Disc 1st | Exhibit: A Incremental Charge - Manual Svc Order vs. Electronic-Disc Add'l |
|---|---|---|---|---|---|---|---|---|---|---|---|---|---|---|---|---|
| | | | | | | Rec | Nonrecurring | | Nonrecurring Disconnect | | OSS Rates ($) | | | | | |
| | | | | | | | First | Add'l | First | Add'l | SOMEC | SOMAN | SOMAN | SOMAN | SOMAN | SOMAN |
| | 2-Wire VG Loop/IO Tranport/Port Combo - Zone 2 | | 2 | | | 18.68 | | | | | | | | | | |
| | 2-Wire VG Loop/IO Tranport/Port Combo - Zone 3 | | 3 | | | 34.45 | | | | | | | | | | |
| **UNE Loop Rates** | | | | | | | | | | | | | | | | |
| | 2-Wire Voice Grade Loop (SL2) - Zone 1 | | 1 | UEPFP | UECF2 | 12.67 | | | | | | | | | | |
| | 2-Wire Voice Grade Loop (SL2) - Zone 2 | | 2 | UEPFP | UECF2 | 17.45 | | | | | | | | | | |
| | 2-Wire Voice Grade Loop (SL2) - Zone 3 | | 3 | UEPFP | UECF2 | 33.22 | | | | | | | | | | |
| **2-Wire Voice Grade Line Port Rates (BUS - PBX)** | | | | | | | | | | | | | | | | |
| | Line Side Unbundled Combination 2-Way PBX Trunk Port - Bus | | | UEPFP | UEPPC | 1.23 | 164.27 | 78.65 | 75.05 | 8.73 | | | | | | |
| | Line Side Unbundled Outward PBX Trunk Port - Bus | | | UEPFP | UEPPO | 1.23 | 164.27 | 78.65 | 75.05 | 8.73 | | | | | | |
| | Line Side Unbundled Incoming PBX Trunk Port - Bus | | | UEPFP | UEPP1 | 1.23 | 164.27 | 78.65 | 75.05 | 8.73 | | | | | | |
| | 2-Wire Voice Unbundled PBX LD Terminal Ports | | | UEPFP | UEPLD | 1.23 | 164.27 | 78.65 | 75.05 | 8.73 | | | | | | |
| | 2-Wire Voice Unbundled 2-Way Combination PBX Usage Port | | | UEPFP | UEPXA | 1.23 | 164.27 | 78.65 | 75.05 | 8.73 | | | | | | |
| | 2-Wire Voice Unbundled PBX Toll Terminal Hotel Ports | | | UEPFP | UEPXB | 1.23 | 164.27 | 78.65 | 75.05 | 8.73 | | | | | | |
| | 2-Wire Voice Unbundled PBX LD DDD Terminals Port | | | UEPFP | UEPXC | 1.23 | 164.27 | 78.65 | 75.05 | 8.73 | | | | | | |
| | 2-Wire Voice Unbundled PBX LD Terminal Switchboard Port | | | UEPFP | UEPXD | 1.23 | 164.27 | 78.65 | 75.05 | 8.73 | | | | | | |
| | 2-Wire Voice Unbundled PBX LD Terminal Switchboard IDD Capable Port | | | UEPFP | UEPXE | 1.23 | 164.27 | 78.65 | 75.05 | 8.73 | | | | | | |
| | 2-Wire Voice Unbundled 2-Way PBX Kentucky Room Area Calling Port without LUD | | | UEPFP | UEPXF | 1.23 | 164.27 | 78.65 | 75.05 | 8.73 | | | | | | |
| | 2-Wire Voice Unbundled PBX Kentucky LUD Area Calling Port | | | UEPFP | UEPXG | 1.23 | 164.27 | 78.65 | 75.05 | 8.73 | | | | | | |
| | 2-Wire Voice Unbundled PBX Kentucky Premium Calling Port | | | UEPFP | UEPXH | 1.23 | 164.27 | 78.65 | 75.05 | 8.73 | | | | | | |
| | 2-Wire Voice Unbundled 2-Way Kentucky Area Calling Port without LUD | | | UEPFP | UEPXJ | 1.23 | 164.27 | 78.65 | 75.05 | 8.73 | | | | | | |
| | 2-Wire Voice Unbundled 2-Way PBX Hotel/Hospital Economy Administrative Calling Port | | | UEPFP | UEPXL | 1.23 | 164.27 | 78.65 | 75.05 | 8.73 | | | | | | |
| | 2-Wire Voice Unbundled 2-Way PBX Hotel/Hospital Economy Room Calling Port | | | UEPFP | UEPXM | 1.23 | 164.27 | 78.65 | 75.05 | 8.73 | | | | | | |
| | 2-Wire Voice Unbundled 1-Way Outgoing PBX Hotel/Hospital Discount Room Calling Port | | | UEPFP | UEPXO | 1.23 | 164.27 | 78.65 | 75.05 | 8.73 | | | | | | |
| | 2-Wire Voice Unbundled 1-Way Outgoing PBX Measured Port | | | UEPFP | UEPXS | 1.23 | 164.27 | 78.65 | 75.05 | 8.73 | | | | | | |
| **LOCAL NUMBER PORTABILITY** | | | | | | | | | | | | | | | | |
| | Local Number Portability (1 per port) | | | UEPFP | LNPCP | 3.15 | 0.00 | 0.00 | | | | | | | | |
| **INTEROFFICE TRANSPORT** | | | | | | | | | | | | | | | | |
| | Interoffice Transport - Dedicated - 2 Wire Voice Grade - Facility Termination | | | UEPFP | U1TV2 | 23.95 | 98.09 | 53.67 | 56.31 | 22.42 | | | | | | |
| | Interoffice Transport - Dedicated - 2 Wire Voice Grade - Per Mile or Fraction Mile | | | UEPFP | 1L5XX | 0.0095 | | | | | | | | | | |
| **FEATURES** | | | | | | | | | | | | | | | | |
| | All Features Offered | | | UEPFP | UEPVF | 0.00 | 0.00 | 0.00 | | | | | | | | |
| **NONRECURRING CHARGES (NRCs) - CURRENTLY COMBINED** | | | | | | | | | | | | | | | | |
| | 2-Wire Loop / Dedicated IO Transport / 2 Wire Line Port Combination - Conversion - Switch-as-is | | | UEPFP | USAC2 | | 9.03 | 1.87 | | | | | | | | |
| | 2-Wire Loop / Dedicated IO Transport / 2 Wire Line Port Combination - Conversion - Switch with change | | | UEPFP | USACC | | 9.03 | 1.87 | | | | | | | | |
| | Unbundled Miscellaneous Rate Element, Tag Designed Loop at End User Premise | | | UEPFP | URETN | | 11.21 | 1.10 | | | | | | | | |
| **UNBUNDLED PORT/LOOP COMBINATIONS - COST BASED RATES** | | | | | | | | | | | | | | | | |
| **2-WIRE VOICE GRADE LOOP- BUS ONLY - WITH 2-WIRE DID TRUNK PORT** | | | | | | | | | | | | | | | | |
| **UNE Port/Loop Combination Rates** | | | | | | | | | | | | | | | | |
| | 2-Wire VG Loop/2-Wire DID Trunk Port Combo - UNE Zone 1 | | 1 | | | 21.30 | | | | | | | | | | |
| | 2-Wire VG Loop/2-Wire DID Trunk Port Combo - UNE Zone 2 | | 2 | | | 26.08 | | | | | | | | | | |
| | 2-Wire VG Loop/2-Wire DID Trunk Port Combo - UNE Zone 3 | | 3 | | | 41.85 | | | | | | | | | | |
| **UNE Loop Rates** | | | | | | | | | | | | | | | | |
| | 2-Wire Analog Voice Grade Loop - (SL2) - UNE Zone 1 | | 1 | UEPPX | UECD1 | 12.67 | | | | | | | | | | |
| | 2-Wire Analog Voice Grade Loop - (SL2) - UNE Zone 2 | | 2 | UEPPX | UECD1 | 17.45 | | | | | | | | | | |
| | 2-Wire Analog Voice Grade Loop - (SL2) - UNE Zone 3 | | 3 | UEPPX | UECD1 | 33.22 | | | | | | | | | | |
| **UNE Port Rate** | | | | | | | | | | | | | | | | |
| | Exchange Ports - 2-Wire DID Port | | | UEPPX | UEPD1 | 8.63 | 336.11 | 27.75 | 132.37 | 9.31 | | | | | | |

| UNBUNDLED NETWORK ELEMENTS - Kentucky | | | | | | | | | | | | | Attachment: 2 | | Exhibit: A | |
|---|---|---|---|---|---|---|---|---|---|---|---|---|---|---|---|---|
| CATEGORY | RATE ELEMENTS | Interim | Zone | BCS | USOC | RATES ($) | | | | | Svc Order Submitted Elec per LSR | Svc Order Submitted Manually per LSR | Incremental Charge - Manual Svc Order vs. Electronic-1st | Incremental Charge - Manual Svc Order vs. Electronic-Add'l | Incremental Charge - Manual Svc Order vs. Electronic-Disc 1st | Incremental Charge - Manual Svc Order vs. Electronic-Disc Add'l |
| | | | | | | Rec | Nonrecurring | | Nonrecurring Disconnect | | OSS Rates ($) | | | | | |
| | | | | | | | First | Add'l | First | Add'l | SOMEC | SOMAN | SOMAN | SOMAN | SOMAN | SOMAN |
| | NONRECURRING CHARGES - CURRENTLY COMBINED | | | | | | | | | | | | | | | |
| | 2-Wire Voice Grade Loop / 2-Wire DID Trunk Port Conversion with BellSouth Allowable Changes | | | UEPPX | USA1C | | 7.85 | 1.87 | | | | | | | | |
| | ADDITIONAL NRCs | | | | | | | | | | | | | | | |
| | 2-Wire DID Subsequent Activity - Add Trunks, Per Trunk | | | UEPPX | USAS1 | | 32.25 | 32.25 | | | | | | | | |
| | Unbundled Miscellaneous Rate Element, Tag Designed Loop at End User Premise | | | UEPPX | URETN | | 11.21 | 1.10 | | | | | | | | |
| | Telephone Number/Trunk Group Establisment Charges | | | | | | | | | | | | | | | |
| | DID Trunk Termination (One Per Port) | | | UEPPX | NDT | 0.00 | 0.00 | 0.00 | | | | | | | | |
| | Additional DID Numbers for each Group of 20 DID Numbers | | | UEPPX | ND4 | 0.00 | 0.00 | 0.00 | | | | | | | | |
| | DID Numbers, Non- consecutive DID Numbers , Per Number | | | UEPPX | ND5 | 0.00 | 0.00 | 0.00 | | | | | | | | |
| | Reserve Non-Consecutive DID numbers | | | UEPPX | ND6 | 0.00 | 0.00 | 0.00 | | | | | | | | |
| | Reserve DID Numbers | | | UEPPX | NDV | 0.00 | 0.00 | 0.00 | | | | | | | | |
| | LOCAL NUMBER PORTABILITY | | | | | | | | | | | | | | | |
| | Local Number Portability (1 per port) | | | UEPPX | LNPCP | 3.15 | 0.00 | 0.00 | | | | | | | | |
| | 2-WIRE ISDN DIGITAL GRADE LOOP WITH 2-WIRE ISDN DIGITAL LINE SIDE PORT | | | | | | | | | | | | | | | |
| | UNE Port/Loop Combination Rates | | | | | | | | | | | | | | | |
| | 2W ISDN Digital Grade Loop/2W ISDN Digital Line Side Port - UNE Zone 1 | | 1 | UEPPB UEPPR | | 25.69 | | | | | | | | | | |
| | 2W ISDN Digital Grade Loop/2W ISDN Digital Line Side Port - UNE Zone 2 | | 2 | UEPPB UEPPR | | 31.92 | | | | | | | | | | |
| | 2W ISDN Digital Grade Loop/2W ISDN Digital Line Side Port - UNE Zone 3 | | 3 | UEPPB UEPPR | | 50.21 | | | | | | | | | | |
| | UNE Loop Rates | | | | | | | | | | | | | | | |
| | 2-Wire ISDN Digital Grade Loop - UNE Zone 1 | | 1 | UEPPB UEPPR | USL2X | 16.10 | | | | | | | | | | |
| | 2-Wire ISDN Digital Grade Loop - UNE Zone 2 | | 2 | UEPPB UEPPR | USL2X | 22.33 | | | | | | | | | | |
| | 2-Wire ISDN Digital Grade Loop - UNE Zone 3 | | 3 | UEPPB UEPPR | USL2X | 40.63 | | | | | | | | | | |
| | UNE Port Rate | | | | | | | | | | | | | | | |
| | Exchange Port - 2-Wire ISDN Line Side Port | | | UEPPB UEPPR | UEPPB | 9.59 | 320.53 | 289.13 | 92.19 | 17.56 | | | | | | |
| | NONRECURRING CHARGES - CURRENTLY COMBINED | | | | | | | | | | | | | | | |
| | 2-Wire ISDN Digital Grade Loop / 2-Wire ISDN Line Side Port Combination - Conversion | | | UEPPB UEPPR | USACB | 0.00 | 22.77 | 17.00 | | | | | | | | |
| | ADDITIONAL NRCs | | | | | | | | | | | | | | | |
| | Unbundled Miscellaneous Rate Element, Tag Designed Loop at End User Premise | | | UEPPB UEPPR | URETN | | 11.21 | 1.10 | | | | | | | | |
| | Unbundled Miscellaneous Rate Element, Tag Loop at End User Premise | | | UEPPB UEPPR | URETL | | 8.33 | 0.83 | | | | | | | | |
| | LOCAL NUMBER PORTABILITY | | | | | | | | | | | | | | | |
| | Local Number Portability (1 per port) | | | UEPPB UEPPR | LNPCX | 0.35 | 0.00 | 0.00 | | | | | | | | |
| | B-CHANNEL USER PROFILE ACCESS: | | | | | | | | | | | | | | | |
| | CVS/CSD (DMS/5ESS) | | | UEPPB UEPPR | U1UCA | 0.00 | 0.00 | 0.00 | | | | | | | | |
| | CVS (EWSD) | | | UEPPB UEPPR | U1UCB | 0.00 | 0.00 | 0.00 | | | | | | | | |
| | CSD | | | UEPPB UEPPR | U1UCC | 0.00 | 0.00 | 0.00 | | | | | | | | |
| | B-CHANNEL AREA PLUS USER PROFILE ACCESS: (AL,KY,LA,MS SC,MS, & TN) | | | | | | | | | | | | | | | |
| | CVS/CSD (DMS/5ESS) | | | UEPPB UEPPR | U1UCD | 0.00 | 0.00 | 0.00 | | | | | | | | |
| | CVS (EWSD) | | | UEPPB UEPPR | U1UCE | 0.00 | 0.00 | 0.00 | | | | | | | | |
| | CSD | | | UEPPB UEPPR | U1UCF | 0.00 | 0.00 | 0.00 | | | | | | | | |
| | USER TERMINAL PROFILE | | | | | | | | | | | | | | | |
| | User Terminal Profile (EWSD only) | | | UEPPB UEPPR | U1UMA | 0.00 | 0.00 | 0.00 | | | | | | | | |
| | VERTICAL FEATURES | | | | | | | | | | | | | | | |
| | All Vertical Features - One per Channel B User Profile | | | UEPPB UEPPR | UEPVF | 0.00 | 0.00 | 0.00 | | | | | | | | |
| | INTEROFFICE CHANNEL MILEAGE | | | | | | | | | | | | | | | |
| | Interoffice Channel mileage each, including first mile and facilities termination | | | UEPPB UEPPR | M1GNC | 29.12 | 47.34 | 31.78 | 22.77 | 8.75 | | | | | | |
| | Interoffice Channel mileage each, additional mile | | | UEPPB UEPPR | M1GNM | 0.01 | 0.00 | 0.00 | | | | | | | | |
| | 4-WIRE DS1 DIGITAL LOOP WITH 4-WIRE ISDN DS1 DIGITAL TRUNK PORT | | | | | | | | | | | | | | | |
| | The UNE-P DS1 combination rates below for in this rate exhibit apply to the embedded base in place as of 10/2/03 until 4/1/04. After 4/1/04 these rates shall revert to tariff rates or a separate commercial agreement. | | | | | | | | | | | | | | | |
| | Requests for 4-Wire DS1 Digital Loop with 4-Wire ISDN DS1 Digital Trunk Port after the effective date of this amendment shall be provided pursuant to a separate agreement or tariff at BellSouth's discretion. | | | | | | | | | | | | | | | |

## UNBUNDLED NETWORK ELEMENTS - Kentucky

| CATEGORY | RATE ELEMENTS | Interim | Zone | BCS | USOC | RATES ($) | | | | | Svc Order Submitted Elec per LSR | Svc Order Submitted Manually per LSR | Attachment: 2 | | Exhibit: A | |
|---|---|---|---|---|---|---|---|---|---|---|---|---|---|---|---|---|
| | | | | | | | | | | | | | Incremental Charge - Manual Svc Order vs. Electronic-1st | Incremental Charge - Manual Svc Order vs. Electronic-Add'l | Incremental Charge - Manual Svc Order vs. Electronic-Disc 1st | Incremental Charge - Manual Svc Order vs. Electronic-Disc Add'l |
| | | | | | | Rec | Nonrecurring | | Nonrecurring Disconnect | | OSS Rates ($) | | | | | |
| | | | | | | | First | Add'l | First | Add'l | SOMEC | SOMAN | SOMAN | SOMAN | SOMAN | SOMAN |
| **UNE Port/Loop Combination Rates** | | | | | | | | | | | | | | | | |
| | 4W DS1 Digital Loop/4W ISDN DS1 Digital Trunk Port - UNE Zone 1 | | 1 | UEPPP | | 170.06 | | | | | | | | | | |
| | 4W DS1 Digital Loop/4W ISDN DS1 Digital Trunk Port - UNE Zone 2 | | 2 | UEPPP | | 197.70 | | | | | | | | | | |
| | 4W DS1 Digital Loop/4W ISDN DS1 Digital Trunk Port - UNE Zone 3 | | 3 | UEPPP | | 381.35 | | | | | | | | | | |
| **UNE Loop Rates** | | | | | | | | | | | | | | | | |
| | 4-Wire DS1 Digital Loop - UNE Zone 1 | | 1 | UEPPP | USL4P | 86.47 | | | | | | | | | | |
| | 4-Wire DS1 Digital Loop - UNE Zone 2 | | 2 | UEPPP | USL4P | 114.10 | | | | | | | | | | |
| | 4-Wire DS1 Digital Loop - UNE Zone 3 | | 3 | UEPPP | USL4P | 297.76 | | | | | | | | | | |
| **UNE Port Rate** | | | | | | | | | | | | | | | | |
| | Exchange Ports - 4-Wire ISDN DS1 Port (E:4/1/2004) | | | UEPPP | UEPPP | 83.59 | 736.16 | 382.74 | 159.48 | 48.82 | | | | | | |
| **NONRECURRING CHARGES - CURRENTLY COMBINED** | | | | | | | | | | | | | | | | |
| | 4-Wire DS1 Digital Loop / 4-Wire ISDN DS1 Digital Trunk Port Combination - Conversion -Switch-as-is (E:4/1/2004) | | | UEPPP | USACP | 0.00 | 81.70 | 61.37 | | | | | | | | |
| **ADDITIONAL NRCs** | | | | | | | | | | | | | | | | |
| | 4-Wire DS1 Loop/4-W ISDN Digtl Trk Port - Subsqt Actvy-Inward/two way Tel Nos. (except NC) | | | UEPPP | PR7TF | | 0.54 | | | | | | | | | |
| | 4-Wire DS1 Loop / 4-Wire ISDN DS1 Digital Trunk Port - Outward Tel Numbers (All States except NC) | | | UEPPP | PR7TO | | 12.71 | 12.71 | | | | | | | | |
| | 4-Wire DS1 Loop / 4-Wire ISDN DS1 Digital Trk Port - Subsequent Inward Tel Numbers | | | UEPPP | PR7ZT | | 25.41 | 25.41 | | | | | | | | |
| **LOCAL NUMBER PORTABILITY** | | | | | | | | | | | | | | | | |
| | Local Number Portability (1 per port) | | | UEPPP | LNPCN | 1.75 | | | | | | | | | | |
| **INTERFACE (Provsioning Only)** | | | | | | | | | | | | | | | | |
| | Voice/Data | | | UEPPP | PR71V | 0.00 | 0.00 | 0.00 | | | | | | | | |
| | Digital Data | | | UEPPP | PR71D | 0.00 | 0.00 | 0.00 | | | | | | | | |
| | Inward Data | | | UEPPP | PR71E | 0.00 | 0.00 | 0.00 | | | | | | | | |
| **New or Additional "B" Channel** | | | | | | | | | | | | | | | | |
| | New or Additional - Voice/Data B Channel | | | UEPPP | PR7BV | 0.00 | 15.48 | | | | | | | | | |
| | New or Additional - Digital Data B Channel | | | UEPPP | PR7BF | 0.00 | 15.48 | | | | | | | | | |
| | New or Additional Inward Data B Channel | | | UEPPP | PR7BD | 0.00 | 15.48 | | | | | | | | | |
| **CALL TYPES** | | | | | | | | | | | | | | | | |
| | Inward | | | UEPPP | PR7C1 | 0.00 | 0.00 | 0.00 | | | | | | | | |
| | Outward | | | UEPPP | PR7CO | 0.00 | 0.00 | 0.00 | | | | | | | | |
| | Two-way | | | UEPPP | PR7CC | 0.00 | 0.00 | 0.00 | | | | | | | | |
| **Interoffice Channel Mileage** | | | | | | | | | | | | | | | | |
| | Fixed Each Including First Mile | | | UEPPP | 1LN1A | 96.27 | 105.52 | 98.46 | 23.09 | 20.49 | | | | | | |
| | Each Airline-Fractional Additional Mile | | | UEPPP | 1LN1B | 0.23 | | | | | | | | | | |
| **4-WIRE DS1 DIGITAL LOOP WITH 4-WIRE DDITS TRUNK PORT** | | | | | | | | | | | | | | | | |
| **The UNE-P DS1 combination rates below for in this rate exhibit apply to the embedded base in place as of 10/2/03 until 4/1/04. After 4/1/04 these rates shall revert to tariff rates or a separate commercial agreement.** | | | | | | | | | | | | | | | | |
| **Requests for 4-Wire DS1 Digital Loop with 4-Wire DDITS after the effective date of this amendment shall be provided pursuant to a separate agreement or tariff at BellSouth's discretion.** | | | | | | | | | | | | | | | | |
| **UNE Port/Loop Combination Rates** | | | | | | | | | | | | | | | | |
| | 4W DS1 Digital Loop/4W DDITS Trunk Port - UNE Zone 1 | | 1 | UEPDC | | 147.99 | | | | | | | | | | |
| | 4W DS1 Digital Loop/4W DDITS Trunk Port - UNE Zone 2 | | 2 | UEPDC | | 175.62 | | | | | | | | | | |
| | 4W DS1 Digital Loop/4W DDITS Trunk Port - UNE Zone 3 | | 3 | UEPDC | | 359.28 | | | | | | | | | | |
| **UNE Loop Rates** | | | | | | | | | | | | | | | | |
| | 4-Wire DS1 Digital Loop - UNE Zone 1 | | 1 | UEPDC | USLDC | 86.47 | | | | | | | | | | |
| | 4-Wire DS1 Digital Loop - UNE Zone 2 | | 2 | UEPDC | USLDC | 114.10 | | | | | | | | | | |
| | 4-Wire DS1 Digital Loop - UNE Zone 3 | | 3 | UEPDC | USLDC | 297.76 | | | | | | | | | | |
| **UNE Port Rate** | | | | | | | | | | | | | | | | |
| | 4-Wire DDITS Digital Trunk Port (E:4/1/2004) | | | UEPDC | UDD1T | 61.52 | 780.61 | 375.52 | 176.19 | 16.98 | | | | | | |
| **NONRECURRING CHARGES - CURRENTLY COMBINED** | | | | | | | | | | | | | | | | |
| | 4-Wire DS1 Digital Loop / 4-Wire DDITS Trunk Port Combination - Switch-as-is (E:4/1/2004) | | | UEPDC | USAC4 | | 92.84 | 46.70 | | | | | | | | |
| | 4-Wire DS1 Digital Loop / 4-Wire DDITS Trunk Port Combination - Conversion with DS1 Changes (E:4/1/2004) | | | UEPDC | USAWA | | 92.84 | 46.70 | | | | | | | | |

## UNBUNDLED NETWORK ELEMENTS - Kentucky

| CATEGORY | RATE ELEMENTS | Interim | Zone | BCS | USOC | RATES ($) | | | | | Svc Order Submitted Elec per LSR | Svc Order Submitted Manually per LSR | Attachment: 2 Incremental Charge - Manual Svc Order vs. Electronic-1st | Attachment: 2 Incremental Charge - Manual Svc Order vs. Electronic-Add'l | Exhibit: A Incremental Charge - Manual Svc Order vs. Electronic-Disc 1st | Exhibit: A Incremental Charge - Manual Svc Order vs. Electronic-Disc Add'l |
|---|---|---|---|---|---|---|---|---|---|---|---|---|---|---|---|---|
| | | | | | | Rec | Nonrecurring | | Nonrecurring Disconnect | | OSS Rates ($) | | | | | |
| | | | | | | | First | Add'l | First | Add'l | SOMEC | SOMAN | SOMAN | SOMAN | SOMAN | SOMAN |
| | 4-Wire DS1 Digital Loop / 4-Wire DDITS Trunk Port Combination - Conversion with Change - Trunk (E:4/1/2004) | | | UEPDC | USAWB | | 92.84 | 46.70 | | | | | | | | |
| | **ADDITIONAL NRCs** | | | | | | | | | | | | | | | |
| | 4-Wire DS1 Loop / 4-Wire DDITS Trunk Port - NRC - Subsequent Channel Activation/Chan - 2-Way Trunk | | | UEPDC | UDTTA | | 15.09 | 15.09 | | | | | | | | |
| | 4-Wire DS1 Loop / 4-Wire DDITS Trunk Port - Subsequent Channel Activation/Chan - 1-Way Outward Trunk | | | UEPDC | UDTTB | | 15.09 | 15.09 | | | | | | | | |
| | 4-Wire DS1 Loop / 4-Wire DDITS Trunk Port - Subsqnt Channel Activation/Chan Inward Trunk w/out DID | | | UEPDC | UDTTC | | 15.09 | 15.09 | | | | | | | | |
| | 4-Wire DS1 Loop / 4-Wire DDITS Trunk Port - Subsqnt Chan Activation Per Chan - Inward Trunk with DID | | | UEPDC | UDTTD | | 15.09 | 15.09 | | | | | | | | |
| | 4-Wire DS1 Loop / 4-Wire DDITS Trunk Port - Subsqnt Chan Activation / Chan - 2-Way DID w User Trans | | | UEPDC | UDTTE | | 15.09 | 15.09 | | | | | | | | |
| | **BIPOLAR 8 ZERO SUBSTITUTION** | | | | | | | | | | | | | | | |
| | B8ZS -Superframe Format | | | UEPDC | CCOSF | | 0.00i | 730.00s | | | | | | | | |
| | B8ZS - Extended Superframe Format | | | UEPDC | CCOEF | | 0.00i | 730.00s | | | | | | | | |
| | **Alternate Mark Inversion** | | | | | | | | | | | | | | | |
| | AMI -Superframe Format | | | UEPDC | MCOSF | | 0.00 | 0.00 | | | | | | | | |
| | AMI - Extended SuperFrame Format | | | UEPDC | MCOPO | | 0.00 | 0.00 | | | | | | | | |
| | **Telephone Number/Trunk Group Establisment Charges** | | | | | | | | | | | | | | | |
| | Telephone Number for 2-Way Trunk Group | | | UEPDC | UDTGX | 0.00 | 0.00 | 0.00 | | | | | | | | |
| | Telephone Number for 1-Way Outward Trunk Group | | | UEPDC | UDTGY | 0.00 | | 0.00 | | | | | | | | |
| | Telephone Number for 1-Way Inward Trunk Group Without DID | | | UEPDC | UDTGZ | 0.00 | 0.00 | 0.00 | | | | | | | | |
| | DID Numbers for each Group of 20 DID Numbers | | | UEPDC | ND4 | 0.00 | 0.00 | 0.00 | | | | | | | | |
| | DID Numbers, Non- consecutive DID Numbers , Per Number | | | UEPDC | ND5 | 0.00 | 0.00 | 0.00 | | | | | | | | |
| | Reserve Non-Consecutive DID Nos. | | | UEPDC | ND6 | 0.00 | 0.00 | 0.00 | | | | | | | | |
| | Reserve DID Numbers | | | UEPDC | NDV | 0.00 | 0.00 | 0.00 | | | | | | | | |
| | **Dedicated DS1 (Interoffice Channel Mileage) - FX/FCO for 4-Wire DS1 Digital Loop with 4-Wire DDITS Trunk Port** | | | | | | | | | | | | | | | |
| | Interoffice Channel Mileage - Fixed rate 0-8 miles (Facilities Termination) | | | UEPDC | 1LNO1 | 96.04 | 105.52 | 98.46 | 23.09 | 20.49 | | | | | | |
| | Interoffice Channel Mileage - Additional rate per mile - 0-8 miles | | | UEPDC | 1LNOA | 0.23 | 0.00 | 0.00 | | | | | | | | |
| | Interoffice Channel Mileage - Fixed rate 9-25 miles (Facilities Termination) | | | UEPDC | 1LNO2 | 0.00 | 0.00 | 0.00 | | | | | | | | |
| | Interoffice Channel Mileage - Additional rate per mile - 9-25 miles | | | UEPDC | 1LNOB | 0.45 | 0.00 | 0.00 | | | | | | | | |
| | Interoffice Channel Mileage - Fixed rate 25+ miles (Facilities Termination) | | | UEPDC | 1LNO3 | 0.00 | 0.00 | 0.00 | | | | | | | | |
| | Interoffice Channel Mileage - Additional rate per mile - 25+ miles | | | UEPDC | 1LNOC | 0.45 | 0.00 | 0.00 | | | | | | | | |
| | Local Number Portability, per DS0 Activated | | | UEPDC | LNPCP | 3.15 | 0.00 | 0.00 | | | | | | | | |
| | Central Office Termininating Point | | | UEPDC | CTG | 0.00 | | | | | | | | | | |
| | **4-WIRE DS1 LOOP WITH CHANNELIZATION WITH PORT** | | | | | | | | | | | | | | | |
| | **System is 1 DS1 Loop, 1 D4 Channel Bank, and up to 24 Feature Activations** | | | | | | | | | | | | | | | |
| | **Each System can have up to 24 combinations of rates depending on type and number of ports used** | | | | | | | | | | | | | | | |
| | **The UNE-P DS1 combination rates below for 4-Wire DS1 Loop with Channelization with Port in this rate exhibit apply to the embedded base in place as of 10/2/03 until 4/1/04. After 4/1/04 these rates shall revert to tariff rates or a separate agreement.** | | | | | | | | | | | | | | | |
| | **Requests for 4-Wire DS1 Loop with Channelization with Port after the effective date of this amendment shall be provided pursuant to a separate agreement or tariff at BellSouth's discretion.** | | | | | | | | | | | | | | | |
| | **UNE DS1 Loop** | | | | | | | | | | | | | | | |
| | 4-Wire DS1 Loop - UNE Zone 1 | | 1 | UEPMG | USLDC | 86.47 | 0.00 | 0.00 | | | | | | | | |
| | 4-Wire DS1 Loop - UNE Zone 2 | | 2 | UEPMG | USLDC | 114.10 | 0.00 | 0.00 | | | | | | | | |
| | 4-Wire DS1 Loop - UNE Zone 3 | | 3 | UEPMG | USLDC | 297.76 | 0.00 | 0.00 | | | | | | | | |
| | **UNE DSO Channelization Capacities (D4 Channel Bank Configurations)** | | | | | | | | | | | | | | | |
| | 24 DSO Channel Capacity - 1 per DS1 | | | UEPMG | VUM24 | 111.16 | 0.00 | 0.00 | | | | | | | | |
| | 48 DSO Channel Capacity - 1 per 2 DS1s | | | UEPMG | VUM48 | 222.32 | 0.00 | 0.00 | | | | | | | | |
| | 96 DSO Channel Capacity -1per 4 DS1s | | | UEPMG | VUM96 | 444.64 | 0.00 | 0.00 | | | | | | | | |
| | 144 DS0 Channel Capacity - 1 per 6 DS1s | | | UEPMG | VUM14 | 666.96 | 0.00 | 0.00 | | | | | | | | |
| | 192 DS0 Channel Capacity -1 per 8 DS1s | | | UEPMG | VUM19 | 889.28 | 0.00 | 0.00 | | | | | | | | |
| | 240 DS0 Channel Capacity - 1 per 10 DS1s | | | UEPMG | VUM2O | 1,111.60 | 0.00 | 0.00 | | | | | | | | |
| | 288 DS0 Channel Capacity - 1 per 12 DS1s | | | UEPMG | VUM28 | 1,333.92 | 0.00 | 0.00 | | | | | | | | |

## UNBUNDLED NETWORK ELEMENTS - Kentucky

| CATEGORY | RATE ELEMENTS | Interl m | Zone | BCS | USOC | RATES ($) | | | | | Svc Order Submitted Elec per LSR | Svc Order Submitted Manually per LSR | Attachment: 2 Incremental Charge - Manual Svc Order vs. Electronic-1st | Attachment: 2 Incremental Charge - Manual Svc Order vs. Electronic-Add'l | Exhibit: A Incremental Charge - Manual Svc Order vs. Electronic-Disc 1st | Exhibit: A Incremental Charge - Manual Svc Order vs. Electronic-Disc Add'l |
|---|---|---|---|---|---|---|---|---|---|---|---|---|---|---|---|---|
| | | | | | | Rec | Nonrecurring | | Nonrecurring Disconnect | | OSS Rates ($) | | | | | |
| | | | | | | | First | Add'l | First | Add'l | SOMEC | SOMAN | SOMAN | SOMAN | SOMAN | SOMAN |
| | 384 DS0 Channel Capacity - 1 per 16 DS1s | | | UEPMG | VUM38 | 1,778.56 | 0.00 | 0.00 | | | | | | | | |
| | 480 DS0 Channel Capacity - 1 per 20 DS1s | | | UEPMG | VUM4O | 2,223.20 | 0.00 | 0.00 | | | | | | | | |
| | 576 DS0 Channel Capacity -1 per 24 DS1s | | | UEPMG | VUM57 | 2,667.84 | 0.00 | 0.00 | | | | | | | | |
| | 672 DS0 Channel Capacity - 1 per 28 DS1s | | | UEPMG | VUM67 | 3,112.48 | 0.00 | 0.00 | | | | | | | | |
| | **Non-Recurring Charges (NRC) Associated with 4-Wire DS1 Loop with Channeliztion with Port - Conversion Charge Based on a System** | | | | | | | | | | | | | | | |
| | **A Minimum System configuration is One (1) DS1, One (1) D4 Channel Bank, and Up To 24 DSO Ports with Feature Activations.** | | | | | | | | | | | | | | | |
| | **Multiples of this configuration functioning as one are considered Add'l after the minimum system configuration is counted.** | | | | | | | | | | | | | | | |
| | NRC - Conversion (Currently Combined) with or without BellSouth Allowed Changes | | | UEPMG | USAC4 | 0.00 | 94.30 | 4.24 | | | | | | | | |
| | **System Additions at End User Locations Where 4-Wire DS1 Loop with Channelization with Port Combination Currently Exists and** | | | | | | | | | | | | | | | |
| | **New (Not Currently Combined) in all states, except in Density Zone 1 of Top 8 MSA's** | | | | | | | | | | | | | | | |
| | 1 DS1/D4 Channel Bank - Additionally Add NRC for each Port and Assoc Fea Activation (E:4/1/2004) | | | UEPMG | VUMD4 | 0.00 | 718.89 | 469.86 | 149.83 | 17.77 | | | | | | |
| | **Bipolar 8 Zero Substitution** | | | | | | | | | | | | | | | |
| | Clear Channel Capability Format, superframe - Subsequent Activity Only | | | UEPMG | CCOSF | 0.00 | 0.00i | 730.00s | | | | | | | | |
| | Clear Channel Capability Format - Extended Superframe - Subsequent Activity Only | | | UEPMG | CCOEF | 0.00 | 0.00i | 730.00s | | | | | | | | |
| | **Alternate Mark Inversion (AMI)** | | | | | | | | | | | | | | | |
| | Superframe Format | | | UEPMG | MCOSF | 0.00 | 0.00 | 0.00 | | | | | | | | |
| | Extended Superframe Format | | | UEPMG | MCOPO | 0.00 | 0.00 | 0.00 | | | | | | | | |
| | **Exchange Ports Associated with 4-Wire DS1 Loop with Channelization with Port** | | | | | | | | | | | | | | | |
| | **Exchange Ports** | | | | | | | | | | | | | | | |
| | Line Side Combination Channelized PBX Trunk Port - Business (E:4/1/2004) | | | UEPPX | UEPCX | 1.15 | 0.00 | 0.00 | 0.00 | 0.00 | | | | | | |
| | Line Side Outward Channelized PBX Trunk Port - Business (E:4/1/2004) | | | UEPPX | UEPOX | 1.15 | 0.00 | 0.00 | 0.00 | 0.00 | | | | | | |
| | Line Side Inward Only Channelized PBX Trunk Port without DID (E:4/1/2004) | | | UEPPX | UEP1X | 1.15 | 0.00 | 0.00 | 0.00 | 0.00 | | | | | | |
| | 2-Wire Trunk Side Unbundled Channelized DID Trunk Port (E:4/1/2004) | | | UEPPX | UEPDM | 8.65 | 0.00 | 0.00 | 0.00 | 0.00 | | | | | | |
| | Unbundled Exchange Ports, 2-Wire Channelized – Outdial – (AL, KY, LA, MS, & TN)(Conversion from Network Access Service) (E:4/1/2004) | | | UEPPX | UEPCY | 1.15 | 0.00 | 0.00 | 0.00 | 0.00 | | | | | | |
| | Unbundled Exchange Ports, 2-Wire Channelized – Combination (AL, KY, LA, MS, & TN) (Conversion from Network Access Service) (E:4/1/2004) | | | UEPPX | UEPCT | 1.15 | 0.00 | 0.00 | 0.00 | 0.00 | | | | | | |
| | Unbundled Exchange Ports, 2-Wire Channelized – Outdial – Kentucky Only – Calling Plan (E:4/1/2004) | | | UEPPX | UEPCV | 1.15 | 0.00 | 0.00 | 0.00 | 0.00 | | | | | | |
| | Unbundled Exchange Ports, 2-Wire Channelized – Two Way - Kentucky Only – Calling Plan (E:4/1/2004) | | | UEPPX | UEPCW | 1.15 | 0.00 | 0.00 | 0.00 | 0.00 | | | | | | |
| | **Feature Activations - Unbundled Loop Concentration** | | | | | | | | | | | | | | | |
| | Feature (Service) Activation for each Line Port Terminated in D4 Bank | | | UEPPX | 1PQWM | 0.62 | 25.40 | 13.41 | 4.17 | 4.15 | | | | | | |
| | Feature (Service) Activation for each Trunk Port Terminated in D4 Bank | | | UEPPX | 1PQWU | 0.62 | 78.15 | 19.68 | 59.05 | 11.54 | | | | | | |
| | **Telephone Number/ Group Establishment Charges for DID Service** | | | | | | | | | | | | | | | |
| | DID Trunk Termination (1 per Port) | | | UEPPX | NDT | 0.00 | 0.00 | 0.00 | | | | | | | | |
| | DID Numbers - groups of 20 - Valid all States | | | UEPPX | ND4 | 0.00 | 0.00 | 0.00 | | | | | | | | |
| | Non-Consecutive DID Numbers - per number | | | UEPPX | ND5 | 0.00 | 0.00 | 0.00 | | | | | | | | |
| | Reserve Non-Consecutive DID Numbers | | | UEPPX | ND6 | 0.00 | 0.00 | 0.00 | | | | | | | | |
| | Reserve DID Numbers | | | UEPPX | NDV | 0.00 | 0.00 | 0.00 | | | | | | | | |
| | **Local Number Portability** | | | | | | | | | | | | | | | |
| | Local Number Portability - 1 per port | | | UEPPX | LNPCP | 3.15 | 0.00 | 0.00 | | | | | | | | |
| | **FEATURES - Vertical and Optional** | | | | | | | | | | | | | | | |
| | **Local Switching Features Offered with Line Side Ports Only** | | | | | | | | | | | | | | | |
| | All Features Available | | | UEPPX | UEPVF | 0.00 | 0.00 | 0.00 | | | | | | | | |
| **UNBUNDLED CENTREX PORT/LOOP COMBINATIONS - COST BASED RATES** | | | | | | | | | | | | | | | | |
| | **1. Cost Based Rates are applied where BellSouth is required by FCC and/or State Commission rule to provide Unbundled Local Switching or Switch Ports.** | | | | | | | | | | | | | | | |

| UNBUNDLED NETWORK ELEMENTS - Kentucky | | | | | | | | | | | | | | Attachment: 2 | | Exhibit: A | |
|---|---|---|---|---|---|---|---|---|---|---|---|---|---|---|---|---|---|
| CATEGORY | RATE ELEMENTS | Interim | Zone | BCS | USOC | RATES ($) | | | | | Svc Order Submitted Elec per LSR | Svc Order Submitted Manually per LSR | Incremental Charge - Manual Svc Order vs. Electronic-1st | Incremental Charge - Manual Svc Order vs. Electronic-Add'l | Incremental Charge - Manual Svc Order vs. Electronic-Disc 1st | Incremental Charge - Manual Svc Order vs. Electronic-Disc Add'l |
| | | | | | | Rec | Nonrecurring | | Nonrecurring Disconnect | | OSS Rates ($) | | | | | |
| | | | | | | | First | Add'l | First | Add'l | SOMEC | SOMAN | SOMAN | SOMAN | SOMAN | SOMAN |
| | 2. Features shall apply to the Unbundled Port/Loop Combination - Cost Based Rate section in the same manner as they are applied to the Stand-Alone Unbundled Port section of this Rate Exhibit. | | | | | | | | | | | | | | | |
| | 3. End Office and Tandem Switching Usage and Common Transport Usage rates in the Port section of this rate exhibit shall apply to all combinations of loop/port network elements except for UNE Coin Port/Loop Combinations. | | | | | | | | | | | | | | | |
| | 4. The first and additional Port nonrecurring charges apply to Not Currently Combined Combos. For Currently Combined Combos, the nonrecurring charges shall be those identified in the Nonrecurring - Currently Combined sections. Additional NRCs may apply also and are categorized accordingly. | | | | | | | | | | | | | | | |
| | 5. Market Rates for Unbundled Centrex Port/Loop Combination will be negotiated on an Individual Case Basis, until further notice. | | | | | | | | | | | | | | | |
| | UNE-P CENTREX - 1AESS - (Valid in AL,FL,GA,KY,LA,MS,&TN only) | | | | | | | | | | | | | | | |
| | 2-Wire VG Loop/2-Wire Voice Grade Port (Centrex) Combo | | | | | | | | | | | | | | | |
| | UNE Port/Loop Combination Rates (Non-Design) | | | | | | | | | | | | | | | |
| | 2-Wire VG Loop/2-Wire Voice Grade Port (Centrex) Port Combo - Non-Design | | 1 | UEP91 | | 10.79 | | | | | | | | | | |
| | 2-Wire VG Loop/2-Wire Voice Grade Port (Centrex)Port Combo - Non-Design | | 2 | UEP91 | | 15.52 | | | | | | | | | | |
| | 2-Wire VG Loop/2-Wire Voice Grade Port (Centrex)Port Combo - Non-Design | | 3 | UEP91 | | 31.74 | | | | | | | | | | |
| | UNE Port/Loop Combination Rates (Design) | | | | | | | | | | | | | | | |
| | 2-Wire VG Loop/2-Wire Voice Grade Port (Centrex) Port Combo - Design | | 1 | UEP91 | | 13.82 | | | | | | | | | | |
| | 2-Wire VG Loop/2-Wire Voice Grade Port (Centrex)Port Combo - Design | | 2 | UEP91 | | 18.60 | | | | | | | | | | |
| | 2-Wire VG Loop/2-Wire Voice Grade Port (Centrex)Port Combo - Design | | 3 | UEP91 | | 34.37 | | | | | | | | | | |
| | UNE Loop Rate | | | | | | | | | | | | | | | |
| | 2-Wire Voice Grade Loop (SL 1) - Zone 1 | | 1 | UEP91 | UECS1 | 9.64 | | | | | | | | | | |
| | 2-Wire Voice Grade Loop (SL 1) - Zone 2 | | 2 | UEP91 | UECS1 | 14.37 | | | | | | | | | | |
| | 2-Wire Voice Grade Loop (SL 1) - Zone 3 | | 3 | UEP91 | UECS1 | 30.59 | | | | | | | | | | |
| | 2-Wire Voice Grade Loop (SL 2) - Zone 1 | | 1 | UEP91 | UECS2 | 12.67 | | | | | | | | | | |
| | 2-Wire Voice Grade Loop (SL 2) - Zone 2 | | 2 | UEP91 | UECS2 | 17.45 | | | | | | | | | | |
| | 2-Wire Voice Grade Loop (SL 2) - Zone 3 | | 3 | UEP91 | UECS2 | 33.22 | | | | | | | | | | |
| | UNE Ports | | | | | | | | | | | | | | | |
| | All States (Except North Carolina and Sout Carolina) | | | | | | | | | | | | | | | |
| | 2-Wire Voice Grade Port (Centrex ) Basic Local Area | | | UEP91 | UEPYA | 1.15 | 21.29 | 15.49 | 2.85 | 2.67 | | | | | | |
| | 2-Wire Voice Grade Port (Centrex 800 termination)Basic Local Area | | | UEP91 | UEPYB | 1.15 | 21.29 | 15.49 | 2.85 | 2.67 | | | | | | |
| | 2-Wire Voice Grade Port (Centrex with Caller ID)Note1 Basic Local Area | | | UEP91 | UEPYH | 1.15 | 21.29 | 15.49 | 2.85 | 2.67 | | | | | | |
| | 2-Wire Voice Grade Port (Centrex from diff Serving Wire Center) Note 2, 3 Basic Local Area | | | UEP91 | UEPYM | 1.15 | 21.29 | 15.49 | 2.85 | 2.67 | | | | | | |
| | 2-Wire Voice Grade Port, Diff Serving Wire Center - 800 Service Term - Basic Local Area | | | UEP91 | UEPYZ | 1.15 | 21.29 | 15.49 | 2.85 | 2.67 | | | | | | |
| | 2-Wire Voice Grade Port terminated in on Megalink or equivalent - Basic Local Area | | | UEP91 | UEPY9 | 1.15 | 21.29 | 15.49 | 2.85 | 2.67 | | | | | | |
| | 2-Wire Voice Grade Port Terminated on 800 Service Term - Basic Local Area | | | UEP91 | UEPY2 | 1.15 | 21.29 | 15.49 | 2.85 | 2.67 | | | | | | |
| | AL, KY, LA, MS, & TN Only | | | | | | | | | | | | | | | |
| | 2-Wire Voice Grade Port (Centrex ) | | | UEP91 | UEPQA | 1.15 | 21.29 | 15.49 | 2.85 | 2.67 | | | | | | |
| | 2-Wire Voice Grade Port (Centrex 800 termination) | | | UEP91 | UEPQB | 1.15 | 21.29 | 15.49 | 2.85 | 2.67 | | | | | | |
| | 2-Wire Voice Grade Port (Centrex with Caller ID)1 | | | UEP91 | UEPQH | 1.15 | 21.29 | 15.49 | 2.85 | 2.67 | | | | | | |
| | 2-Wire Voice Grade Port (Centrex from diff Serving Wire Center)2,3 | | | UEP91 | UEPQM | 1.15 | 21.29 | 15.49 | 2.85 | 2.67 | | | | | | |
| | 2-Wire Voice Grade Port, Diff Serving Wire Center - 2,3 - 800 Service Term | | | UEP91 | UEPQZ | 1.15 | 21.29 | 15.49 | 2.85 | 2.67 | | | | | | |
| | 2-Wire Voice Grade Port terminated in on Megalink or equivalent | | | UEP91 | UEPQ9 | 1.15 | 21.29 | 15.49 | 2.85 | 2.67 | | | | | | |
| | 2-Wire Voice Grade Port Terminated on 800 Service Term | | | UEP91 | UEPQ2 | 1.15 | 21.29 | 15.49 | 2.85 | 2.67 | | | | | | |
| | Local Switching | | | | | | | | | | | | | | | |
| | Centrex Intercom Funtionality, per port | | | UEP91 | URECS | 0.8873 | | | | | | | | | | |
| | Local Number Portability | | | | | | | | | | | | | | | |
| | Local Number Portability (1 per port) | | | UEP91 | LNPCC | 0.35 | | | | | | | | | | |
| | Features | | | | | | | | | | | | | | | |

## UNBUNDLED NETWORK ELEMENTS - Kentucky

| CATEGORY | RATE ELEMENTS | Interim | Zone | BCS | USOC | RATES ($) | | | | | Svc Order Submitted Elec per LSR | Svc Order Submitted Manually per LSR | Attachment: 2 | | Exhibit: A | |
|---|---|---|---|---|---|---|---|---|---|---|---|---|---|---|---|---|
| | | | | | | | | | | | | | Incremental Charge - Manual Svc Order vs. Electronic-1st | Incremental Charge - Manual Svc Order vs. Electronic-Add'l | Incremental Charge - Manual Svc Order vs. Electronic-Disc 1st | Incremental Charge - Manual Svc Order vs. Electronic-Disc Add'l |
| | | | | | | Rec | Nonrecurring | | Nonrecurring Disconnect | | OSS Rates ($) | | | | | |
| | | | | | | | First | Add'l | First | Add'l | SOMEC | SOMAN | SOMAN | SOMAN | SOMAN | SOMAN |
| | All Standard Features Offered, per port | | | UEP91 | UEPVF | 0.00 | | | | | | | | | | |
| | All Select Features Offered, per port | | | UEP91 | UEPVS | 0.00 | 405.66 | | | | | | | | | |
| | All Centrex Control Features Offered, per port | | | UEP91 | UEPVC | 0.00 | | | | | | | | | | |
| NARS | | | | | | | | | | | | | | | | |
| | Unbundled Network Access Register - Combination | | | UEP91 | UARCX | 0.00 | 0.00 | 0.00 | 0.00 | 0.00 | | | | | | |
| | Unbundled Network Access Register - Indial | | | UEP91 | UAR1X | 0.00 | 0.00 | 0.00 | 0.00 | 0.00 | | | | | | |
| | Unbundled Network Access Register - Outdial | | | UEP91 | UAROX | 0.00 | 0.00 | 0.00 | 0.00 | 0.00 | | | | | | |
| **Miscellaneous Terminations** | | | | | | | | | | | | | | | | |
| **2-Wire Trunk Side** | | | | | | | | | | | | | | | | |
| | Trunk Side Terminations, each | | | UEP91 | CENA6 | 10.51 | 92.18 | 15.82 | 52.16 | 5.30 | | | | | | |
| **Interoffice Channel Mileage - 2-Wire** | | | | | | | | | | | | | | | | |
| | Interoffice Channel Facilities Termination - Voice Grade | | | UEP91 | M1GBC | 29.11 | | | | | | | | | | |
| | Interoffice Channel mileage, per mile or fraction of mile | | | UEP91 | M1GBM | 0.01 | | | | | | | | | | |
| **Feature Activations (DS0) Centrex Loops on Channelized DS1 Service** | | | | | | | | | | | | | | | | |
| **D4 Channel Bank Feature Activations** | | | | | | | | | | | | | | | | |
| | Feature Activation on D-4 Channel Bank Centrex Loop Slot | | | UEP91 | 1PQWS | 0.62 | | | | | | | | | | |
| | Feature Activation on D-4 Channel Bank FX line Side Loop Slot | | | UEP91 | 1PQW6 | 0.62 | | | | | | | | | | |
| | Feature Activation on D-4 Channel Bank FX Trunk Side Loop Slot | | | UEP91 | 1PQW7 | 0.62 | | | | | | | | | | |
| | Feature Activation on D-4 Channel Bank Centrex Loop Slot - Different Wire Center | | | UEP91 | 1PQWP | 0.62 | | | | | | | | | | |
| | Feature Activation on D-4 Channel Bank Private Line Loop Slot | | | UEP91 | 1PQWV | 0.62 | | | | | | | | | | |
| | Feature Activation on D-4 Channel Bank Tjie Line/Trunk Loop Slot | | | UEP91 | 1PQWQ | 0.62 | | | | | | | | | | |
| | Feature Activation on D-4 Channel Bank WATS Loop Slot | | | UEP91 | 1PQWA | 0.62 | | | | | | | | | | |
| **Non-Recurring Charges (NRC) Associated with UNE-P Centrex** | | | | | | | | | | | | | | | | |
| | Conversion - Currently Combined Switch-As-Is with allowed changes, per port | | | UEP91 | USAC2 | | 0.102 | 0.102 | | | | | | | | |
| | Conversion of Existing Centrex Common Block | | | UEP91 | USACN | | 18.95 | 8.32 | | | | | | | | |
| | New Centrex Standard Common Block | | | UEP91 | M1ACS | 0.00 | 669.80 | 78.32 | 111.05 | 13.27 | | | | | | |
| | New Centrex Customized Common Block | | | UEP91 | M1ACC | 0.00 | 669.80 | 78.32 | 111.05 | 13.27 | | | | | | |
| | Secondary Block, per Block | | | UEP91 | M2CC1 | 0.00 | 78.32 | 78.32 | 13.27 | 13.27 | | | | | | |
| | NAR Establishment Charge, Per Occasion | | | UEP91 | URECA | 0.00 | 72.75 | | | | | | | | | |
| **Additional Non-Recurring Charges (NRC)** | | | | | | | | | | | | | | | | |
| | Unbundled Miscellaneous Rate Element, Tag Loop at End Use Premise | | | UEP91 | URETL | | 8.33 | 0.83 | | | | | | | | |
| | Unbundled Miscellaneous Rate Element, Tag Design Loop at End Use Premise | | | UEP91 | URETN | | 11.21 | 1.10 | | | | | | | | |
| **UNE-P CENTREX - 5ESS (Valid in All States)** | | | | | | | | | | | | | | | | |
| **2-Wire VG Loop/2-Wire Voice Grade Port (Centrex) Combo** | | | | | | | | | | | | | | | | |
| **UNE Port/Loop Combination Rates (Non-Design)** | | | | | | | | | | | | | | | | |
| | 2-Wire VG Loop/2-Wire Voice Grade Port (Centrex) Port Combo - Non-Design | | 1 | UEP95 | | 10.79 | | | | | | | | | | |
| | 2-Wire VG Loop/2-Wire Voice Grade Port (Centrex)Port Combo - Non-Design | | 2 | UEP95 | | 15.52 | | | | | | | | | | |
| | 2-Wire VG Loop/2-Wire Voice Grade Port (Centrex)Port Combo - Non-Design | | 3 | UEP95 | | 31.74 | | | | | | | | | | |
| **UNE Port/Loop Combination Rates (Design)** | | | | | | | | | | | | | | | | |
| | 2-Wire VG Loop/2-Wire Voice Grade Port (Centrex) Port Combo - Design | | 1 | UEP95 | | 13.82 | | | | | | | | | | |
| | 2-Wire VG Loop/2-Wire Voice Grade Port (Centrex)Port Combo - Design | | 2 | UEP95 | | 18.60 | | | | | | | | | | |
| | 2-Wire VG Loop/2-Wire Voice Grade Port (Centrex)Port Combo - Design | | 3 | UEP95 | | 34.37 | | | | | | | | | | |
| **UNE Loop Rate** | | | | | | | | | | | | | | | | |
| | 2-Wire Voice Grade Loop (SL 1) - Zone 1 | | 1 | UEP95 | UECS1 | 9.64 | | | | | | | | | | |
| | 2-Wire Voice Grade Loop (SL 1) - Zone 2 | | 2 | UEP95 | UECS1 | 14.37 | | | | | | | | | | |

## UNBUNDLED NETWORK ELEMENTS - Kentucky

| CATEGORY | RATE ELEMENTS | Interim | Zone | BCS | USOC | RATES ($) | | | | | Svc Order Submitted Elec per LSR | Svc Order Submitted Manually per LSR | Attachment: 2 Incremental Charge - Manual Svc Order vs. Electronic-1st | Attachment: 2 Incremental Charge - Manual Svc Order vs. Electronic-Add'l | Exhibit: A Incremental Charge - Manual Svc Order vs. Electronic-Disc 1st | Exhibit: A Incremental Charge - Manual Svc Order vs. Electronic-Disc Add'l |
|---|---|---|---|---|---|---|---|---|---|---|---|---|---|---|---|---|
| | | | | | | Rec | Nonrecurring | | Nonrecurring Disconnect | | OSS Rates ($) | | | | | |
| | | | | | | | First | Add'l | First | Add'l | SOMEC | SOMAN | SOMAN | SOMAN | SOMAN | SOMAN |
| | 2-Wire Voice Grade Loop (SL 1) - Zone 3 | | 3 | UEP95 | UECS1 | 30.59 | | | | | | | | | | |
| | 2-Wire Voice Grade Loop (SL 2) - Zone 1 | | 1 | UEP95 | UECS2 | 12.67 | | | | | | | | | | |
| | 2-Wire Voice Grade Loop (SL 2) - Zone 2 | | 2 | UEP95 | UECS2 | 17.45 | | | | | | | | | | |
| | 2-Wire Voice Grade Loop (SL 2) - Zone 3 | | 3 | UEP95 | UECS2 | 33.22 | | | | | | | | | | |
| **UNE Port Rate** | | | | | | | | | | | | | | | | |
| **All States** | | | | | | | | | | | | | | | | |
| | 2-Wire Voice Grade Port (Centrex ) Basic Local Area | | | UEP95 | UEPYA | 1.15 | 21.29 | 15.49 | 2.85 | 2.67 | | | | | | |
| | 2-Wire Voice Grade Port (Centrex 800 termination) | | | UEP95 | UEPYB | 1.15 | 21.29 | 15.49 | 2.85 | 2.67 | | | | | | |
| | 2-Wire Voice Grade Port (Centrex with Caller ID)1Basic Local Area | | | UEP95 | UEPYH | 1.15 | 21.29 | 15.49 | 2.85 | 2.67 | | | | | | |
| | 2-Wire Voice Grade Port (Centrex from diff Serving Wire Center)2,3 Basic Local Area | | | UEP95 | UEPYM | 1.15 | 21.29 | 15.49 | 2.85 | 2.67 | | | | | | |
| | 2-Wire Voice Grade Port, Diff Serving Wire Center 2,3 - 800 Service Term - Basic Local Area | | | UEP95 | UEPYZ | 1.15 | 21.29 | 15.49 | 2.85 | 2.67 | | | | | | |
| | 2-Wire Voice Grade Port terminated in on Megalink or equivalent - Basic Local Area | | | UEP95 | UEPY9 | 1.15 | 21.29 | 15.49 | 2.85 | 2.67 | | | | | | |
| | 2-Wire Voice Grade Port Terminated on 800 Service Term - Basic Local Area | | | UEP95 | UEPY2 | 1.15 | 21.29 | 15.49 | 2.85 | 2.67 | | | | | | |
| **AL, KY, LA, MS, SC, & TN Only** | | | | | | | | | | | | | | | | |
| | 2-Wire Voice Grade Port (Centrex ) | | | UEP95 | UEPQA | 1.15 | 21.29 | 15.49 | 2.85 | 2.67 | | | | | | |
| | 2-Wire Voice Grade Port (Centrex 800 termination) | | | UEP95 | UEPQB | 1.15 | 21.29 | 15.49 | 2.85 | 2.67 | | | | | | |
| | 2-Wire Voice Grade Port (Centrex with Caller ID)1 | | | UEP95 | UEPQH | 1.15 | 21.29 | 15.49 | 2.85 | 2.67 | | | | | | |
| | 2-Wire Voice Grade Port (Centrex from diff Serving Wire Center)2,3 | | | UEP95 | UEPQM | 1.15 | 21.29 | 15.49 | 2.85 | 2.67 | | | | | | |
| | 2-Wire Voice Grade Port, Diff Serving Wire Center - 800 Service Term 2,3 | | | UEP95 | UEPQZ | 1.15 | 21.29 | 15.49 | 2.85 | 2.67 | | | | | | |
| | 2-Wire Voice Grade Port terminated in on Megalink or equivalent | | | UEP95 | UEPQ9 | 1.15 | 21.29 | 15.49 | 2.85 | 2.67 | | | | | | |
| | 2-Wire Voice Grade Port Terminated on 800 Service Term | | | UEP95 | UEPQ2 | 1.15 | 21.29 | 15.49 | 2.85 | 2.67 | | | | | | |
| **Local Switching** | | | | | | | | | | | | | | | | |
| | Centrex Intercom Funtionality, per port | | | UEP95 | URECS | 0.8873 | | | | | | | | | | |
| **Local Number Portability** | | | | | | | | | | | | | | | | |
| | Local Number Portability (1 per port) | | | UEP95 | LNPCC | 0.35 | | | | | | | | | | |
| **Features** | | | | | | | | | | | | | | | | |
| | All Standard Features Offered, per port | | | UEP95 | UEPVF | 0.00 | | | | | | | | | | |
| | All Select Features Offered, per port | | | UEP95 | UEPVS | 0.00 | 405.66 | | | | | | | | | |
| | All Centrex Control Features Offered, per port | | | UEP95 | UEPVC | 0.00 | | | | | | | | | | |
| **NARS** | | | | | | | | | | | | | | | | |
| | Unbundled Network Access Register - Combination | | | UEP95 | UARCX | 0.00 | 0.00 | 0.00 | 0.00 | 0.00 | | | | | | |
| | Unbundled Network Access Register - Indial | | | UEP95 | UAR1X | 0.00 | 0.00 | 0.00 | 0.00 | 0.00 | | | | | | |
| | Unbundled Network Access Register - Outdial | | | UEP95 | UAROX | 0.00 | 0.00 | 0.00 | 0.00 | 0.00 | | | | | | |
| **Miscellaneous Terminations** | | | | | | | | | | | | | | | | |
| **2-Wire Trunk Side** | | | | | | | | | | | | | | | | |
| | Trunk Side Terminations, each | | | UEP95 | CEND6 | 10.51 | 92.18 | 15.82 | 52.16 | 5.30 | | | | | | |
| **4-Wire Digital (1.544 Megabits)** | | | | | | | | | | | | | | | | |
| | DS1 Circuit Terminations, each | | | UEP95 | M1HD1 | 74.77 | 164.86 | 77.74 | 60.69 | 3.86 | | | | | | |
| | DS0 Channels Activated, each | | | UEP95 | M1HDO | 0.00 | 15.09 | | | | | | | | | |
| **Interoffice Channel Mileage - 2-Wire** | | | | | | | | | | | | | | | | |
| | Interoffice Channel Facilities Termination | | | UEP95 | M1GBC | 29.11 | | | | | | | | | | |
| | Interoffice Channel mileage, per mile or fraction of mile | | | UEP95 | M1GBM | 0.01 | | | | | | | | | | |
| **Feature Activations (DS0) Centrex Loops on Channelized DS1 Service** | | | | | | | | | | | | | | | | |
| **D4 Channel Bank Feature Activations** | | | | | | | | | | | | | | | | |
| | Feature Activation on D-4 Channel Bank Centrex Loop Slot | | | UEP95 | 1PQWS | 0.62 | | | | | | | | | | |
| | Feature Activation on D-4 Channel Bank FX line Side Loop Slot | | | UEP95 | 1PQW6 | 0.62 | | | | | | | | | | |
| | Feature Activation on D-4 Channel Bank FX Trunk Side Loop Slot | | | UEP95 | 1PQW7 | 0.62 | | | | | | | | | | |
| | Feature Activation on D-4 Channel Bank Centrex Loop Slot - Different Wire Center | | | UEP95 | 1PQWP | 0.62 | | | | | | | | | | |

## UNBUNDLED NETWORK ELEMENTS - Kentucky

| CATEGORY | RATE ELEMENTS | Interim | Zone | BCS | USOC | RATES ($) | | | | | Svc Order Submitted Elec per LSR | Svc Order Submitted Manually per LSR | Attachment: 2 | | Exhibit: A | |
|---|---|---|---|---|---|---|---|---|---|---|---|---|---|---|---|---|
| | | | | | | | | | | | | | Incremental Charge - Manual Svc Order vs. Electronic-1st | Incremental Charge - Manual Svc Order vs. Electronic-Add'l | Incremental Charge - Manual Svc Order vs. Electronic-Disc 1st | Incremental Charge - Manual Svc Order vs. Electronic-Disc Add'l |
| | | | | | | Rec | Nonrecurring | | Nonrecurring Disconnect | | OSS Rates ($) | | | | | |
| | | | | | | | First | Add'l | First | Add'l | SOMEC | SOMAN | SOMAN | SOMAN | SOMAN | SOMAN |
| | Feature Activation on D-4 Channel Bank Private Line Loop Slot | | | UEP95 | 1PQWV | 0.62 | | | | | | | | | | |
| | Feature Activation on D-4 Channel Bank Tjle Line/Trunk Loop Slot | | | UEP95 | 1PQWQ | 0.62 | | | | | | | | | | |
| | Feature Activation on D-4 Channel Bank WATS Loop Slot | | | UEP95 | 1PQWA | 0.62 | | | | | | | | | | |
| | **Non-Recurring Charges (NRC) Associated with UNE-P Centrex** | | | | | | | | | | | | | | | |
| | NRC Conversion Currently Combined Switch-As-Is with allowed changes, per port | | | UEP95 | USAC2 | | 0.102 | 0.102 | | | | | | | | |
| | Conversion of Existing Centrex Common Block, each | | | UEP95 | USACN | | 18.95 | 8.32 | | | | | | | | |
| | New Centrex Standard Common Block | | | UEP95 | M1ACS | 0.00 | 669.80 | 78.32 | 111.05 | 13.27 | | | | | | |
| | New Centrex Customized Common Block | | | UEP95 | M1ACC | 0.00 | 669.80 | 78.32 | 111.05 | 13.27 | | | | | | |
| | NAR Establishment Charge, Per Occasion | | | UEP95 | URECA | 0.00 | 72.75 | | | | | | | | | |
| | **Additional Non-Recurring Charges (NRC)** | | | | | | | | | | | | | | | |
| | Unbundled Miscellaneous Rate Element, Tag Loop at End Use Premise | | | UEP95 | URETL | | 8.33 | 0.83 | | | | | | | | |
| | Unbundled Miscellaneous Rate Element, Tag Design Loop at End Use Premise | | | UEP95 | URETN | | 11.21 | 1.10 | | | | | | | | |
| | **UNE-P CENTREX - DMS100 (Valid in All States)** | | | | | | | | | | | | | | | |
| | **2-Wire VG Loop/2-Wire Voice Grade Port (Centrex) Combo** | | | | | | | | | | | | | | | |
| | **UNE Port/Loop Combination Rates (Non-Design)** | | | | | | | | | | | | | | | |
| | 2-Wire VG Loop/2-Wire Voice Grade Port (Centrex) Port Combo - Non-Design | | 1 | UEP9D | | 10.79 | | | | | | | | | | |
| | 2-Wire VG Loop/2-Wire Voice Grade Port (Centrex)Port Combo - Non-Design | | 2 | UEP9D | | 15.52 | | | | | | | | | | |
| | 2-Wire VG Loop/2-Wire Voice Grade Port (Centrex)Port Combo - Non-Design | | 3 | UEP9D | | 31.74 | | | | | | | | | | |
| | **UNE Port/Loop Combination Rates (Design)** | | | | | | | | | | | | | | | |
| | 2-Wire VG Loop/2-Wire Voice Grade Port (Centrex) Port Combo - Design | | 1 | UEP9D | | 13.82 | | | | | | | | | | |
| | 2-Wire VG Loop/2-Wire Voice Grade Port (Centrex)Port Combo - Design | | 2 | UEP9D | | 18.60 | | | | | | | | | | |
| | 2-Wire VG Loop/2-Wire Voice Grade Port (Centrex)Port Combo - Design | | 3 | UEP9D | | 34.37 | | | | | | | | | | |
| | **UNE Loop Rate** | | | | | | | | | | | | | | | |
| | 2-Wire Voice Grade Loop (SL 1) - Zone 1 | | 1 | UEP9D | UECS1 | 9.64 | | | | | | | | | | |
| | 2-Wire Voice Grade Loop (SL 1) - Zone 2 | | 2 | UEP9D | UECS1 | 14.37 | | | | | | | | | | |
| | 2-Wire Voice Grade Loop (SL 1) - Zone 3 | | 3 | UEP9D | UECS1 | 30.59 | | | | | | | | | | |
| | 2-Wire Voice Grade Loop (SL 2) - Zone 1 | | 1 | UEP9D | UECS2 | 12.67 | | | | | | | | | | |
| | 2-Wire Voice Grade Loop (SL 2) - Zone 2 | | 2 | UEP9D | UECS2 | 17.45 | | | | | | | | | | |
| | 2-Wire Voice Grade Loop (SL 2) - Zone 3 | | 3 | UEP9D | UECS2 | 33.22 | | | | | | | | | | |
| | **UNE Port Rate** | | | | | | | | | | | | | | | |
| | **ALL STATES** | | | | | | | | | | | | | | | |
| | 2-Wire Voice Grade Port (Centrex ) Basic Local Area | | | UEP9D | UEPYA | 1.15 | 21.29 | 15.49 | 2.85 | 2.67 | | | | | | |
| | 2-Wire Voice Grade Port (Centrex 800 termination)Basic Local Area | | | UEP9D | UEPYB | 1.15 | 21.29 | 15.49 | 2.85 | 2.67 | | | | | | |
| | 2-Wire Voice Grade Port (Centrex / EBS-PSET)3Basic Local Area | | | UEP9D | UEPYC | 1.15 | 21.29 | 15.49 | 2.85 | 2.67 | | | | | | |
| | 2-Wire Voice Grade Port (Centrex / EBS-M5009)3Basic Local Area | | | UEP9D | UEPYD | 1.15 | 21.29 | 15.49 | 2.85 | 2.67 | | | | | | |
| | 2-Wire Voice Grade Port (Centrex / EBS-M5209))3 Basic Local Area | | | UEP9D | UEPYE | 1.15 | 21.29 | 15.49 | 2.85 | 2.67 | | | | | | |
| | 2-Wire Voice Grade Port (Centrex / EBS-M5112))3 Basic Local Area | | | UEP9D | UEPYF | 1.15 | 21.29 | 15.49 | 2.85 | 2.67 | | | | | | |
| | 2-Wire Voice Grade Port (Centrex / EBS-M5312))3Basic Local Area | | | UEP9D | UEPYG | 1.15 | 21.29 | 15.49 | 2.85 | 2.67 | | | | | | |
| | 2-Wire Voice Grade Port (Centrex / EBS-M5008))3 Basic Local Area | | | UEP9D | UEPYT | 1.15 | 21.29 | 15.49 | 2.85 | 2.67 | | | | | | |
| | 2-Wire Voice Grade Port (Centrex / EBS-M5208))3 Basic Local Area | | | UEP9D | UEPYU | 1.15 | 21.29 | 15.49 | 2.85 | 2.67 | | | | | | |

| UNBUNDLED NETWORK ELEMENTS - Kentucky | | | | | | | | | | | | | | Attachment: 2 | | Exhibit: A | |
|---|---|---|---|---|---|---|---|---|---|---|---|---|---|---|---|---|---|
| CATEGORY | | RATE ELEMENTS | Interim | Zone | BCS | USOC | RATES ($) | | | | | Svc Order Submitted Elec per LSR | Svc Order Submitted Manually per LSR | Incremental Charge - Manual Svc Order vs. Electronic-1st | Incremental Charge - Manual Svc Order vs. Electronic-Add'l | Incremental Charge - Manual Svc Order vs. Electronic-Disc 1st | Incremental Charge - Manual Svc Order vs. Electronic-Disc Add'l |
| | | | | | | | Rec | Nonrecurring | | Nonrecurring Disconnect | | OSS Rates ($) | | | | | |
| | | | | | | | | First | Add'l | First | Add'l | SOMEC | SOMAN | SOMAN | SOMAN | SOMAN | SOMAN |
| | | 2-Wire Voice Grade Port (Centrex / EBS-M5216))3 Basic Local Area | | | UEP9D | UEPYV | 1.15 | 21.29 | 15.49 | 2.85 | 2.67 | | | | | | |
| | | 2-Wire Voice Grade Port (Centrex / EBS-M5316))3 Basic Local Area | | | UEP9D | UEPY3 | 1.15 | 21.29 | 15.49 | 2.85 | 2.67 | | | | | | |
| | | 2-Wire Voice Grade Port (Centrex with Caller ID) Basic Local Area | | | UEP9D | UEPYH | 1.15 | 21.29 | 15.49 | 2.85 | 2.67 | | | | | | |
| | | 2-Wire Voice Grade Port (Centrex/Caller ID/Msg Wtg Lamp Indication))4 Basic Local Area | | | UEP9D | UEPYW | 1.15 | 21.29 | 15.49 | 2.85 | 2.67 | | | | | | |
| | | 2-Wire Voice Grade Port (Centrex/Msg Wtg Lamp Indication))4 Basic Local Area | | | UEP9D | UEPYJ | 1.15 | 21.29 | 15.49 | 2.85 | 2.67 | | | | | | |
| | | 2-Wire Voice Grade Port (Centrex from diff Serving Wire Center) 2,3-Basic Local Area | | | UEP9D | UEPYM | 1.15 | 21.29 | 15.49 | 2.85 | 2.67 | | | | | | |
| | | 2-Wire Voice Grade Port (Centrex/differ SWC /EBS-PSET)2,3,4 Basic Local Area | | | UEP9D | UEPYO | 1.15 | 21.29 | 15.49 | 2.85 | 2.67 | | | | | | |
| | | 2-Wire Voice Grade Port (Centrex/differ SWC /EBS-M5009)2,3,4 Basic Local Area | | | UEP9D | UEPYP | 1.15 | 21.29 | 15.49 | 2.85 | 2.67 | | | | | | |
| | | 2-Wire Voice Grade Port (Centrex/differ SWC /EBS-5209)2,3,4 Basic Local Area | | | UEP9D | UEPYQ | 1.15 | 21.29 | 15.49 | 2.85 | 2.67 | | | | | | |
| | | 2-Wire Voice Grade Port (Centrex/differ SWC /EBS-M5112)2,3,4 Basic Local Area | | | UEP9D | UEPYR | 1.15 | 21.29 | 15.49 | 2.85 | 2.67 | | | | | | |
| | | 2-Wire Voice Grade Port (Centrex/differ SWC /EBS-M5312)2,3,4 Basic Local Area | | | UEP9D | UEPYS | 1.15 | 21.29 | 15.49 | 2.85 | 2.67 | | | | | | |
| | | 2-Wire Voice Grade Port (Centrex/differ SWC /EBS-M5008)2,3,4 Basic Local Area | | | UEP9D | UEPY4 | 1.15 | 21.29 | 15.49 | 2.85 | 2.67 | | | | | | |
| | | 2-Wire Voice Grade Port (Centrex/differ SWC /EBS-M5208)2, 3 Basic Local Area | | | UEP9D | UEPY5 | 1.15 | 21.29 | 15.49 | 2.85 | 2.67 | | | | | | |
| | | 2-Wire Voice Grade Port (Centrex/differ SWC /EBS-M5216)2,3,4 Basic Local Area | | | UEP9D | UEPY6 | 1.15 | 21.29 | 15.49 | 2.85 | 2.67 | | | | | | |
| | | 2-Wire Voice Grade Port (Centrex/differ SWC /EBS-M5316)2,3,4 Basic Local Area | | | UEP9D | UEPY7 | 1.15 | 21.29 | 15.49 | 2.85 | 2.67 | | | | | | |
| | | 2-Wire Voice Grade Port, Diff Serving Wire Center - 800 Service Term 2,3 | | | UEP9D | UEPYZ | 1.15 | 21.29 | 15.49 | 2.85 | 2.67 | | | | | | |
| | | 2-Wire Voice Grade Port terminated in on Megalink or equivalent Basic Local Area | | | UEP9D | UEPY9 | 1.15 | 21.29 | 15.49 | 2.85 | 2.67 | | | | | | |
| | | 2-Wire Voice Grade Port Terminated on 800 Service Term Basic Local Area | | | UEP9D | UEPY2 | 1.15 | 21.29 | 15.49 | 2.85 | 2.67 | | | | | | |
| | AL, KY, LA, MS, SC, & TN Only | | | | | | | | | | | | | | | | |
| | | 2-Wire Voice Grade Port (Centrex) | | | UEP9D | UEPQA | 1.15 | 21.29 | 15.49 | 2.85 | 2.67 | | | | | | |
| | | 2-Wire Voice Grade Port (Centrex 800 termination) | | | UEP9D | UEPQB | 1.15 | 21.29 | 15.49 | 2.85 | 2.67 | | | | | | |
| | | 2-Wire Voice Grade Port (Centrex / EBS-PSET)4 | | | UEP9D | UEPQC | 1.15 | 21.29 | 15.49 | 2.85 | 2.67 | | | | | | |
| | | 2-Wire Voice Grade Port (Centrex / EBS-M5009)4 | | | UEP9D | UEPQD | 1.15 | 21.29 | 15.49 | 2.85 | 2.67 | | | | | | |
| | | 2-Wire Voice Grade Port (Centrex / EBS-M5209)4 | | | UEP9D | UEPQE | 1.15 | 21.29 | 15.49 | 2.85 | 2.67 | | | | | | |
| | | 2-Wire Voice Grade Port (Centrex / EBS-M5112)4 | | | UEP9D | UEPQF | 1.15 | 21.29 | 15.49 | 2.85 | 2.67 | | | | | | |
| | | 2-Wire Voice Grade Port (Centrex / EBS-M5312)4 | | | UEP9D | UEPQG | 1.15 | 21.29 | 15.49 | 2.85 | 2.67 | | | | | | |
| | | 2-Wire Voice Grade Port (Centrex / EBS-M5008)4 | | | UEP9D | UEPQT | 1.15 | 21.29 | 15.49 | 2.85 | 2.67 | | | | | | |
| | | 2-Wire Voice Grade Port (Centrex / EBS-M5208)4 | | | UEP9D | UEPQU | 1.15 | 21.29 | 15.49 | 2.85 | 2.67 | | | | | | |
| | | 2-Wire Voice Grade Port (Centrex / EBS-M5216)4 | | | UEP9D | UEPQV | 1.15 | 21.29 | 15.49 | 2.85 | 2.67 | | | | | | |
| | | 2-Wire Voice Grade Port (Centrex / EBS-M5316)4 | | | UEP9D | UEPQ3 | 1.15 | 21.29 | 15.49 | 2.85 | 2.67 | | | | | | |
| | | 2-Wire Voice Grade Port (Centrex with Caller ID) | | | UEP9D | UEPQH | 1.15 | 21.29 | 15.49 | 2.85 | 2.67 | | | | | | |
| | | 2-Wire Voice Grade Port (Centrex/Caller ID/Msg Wtg Lamp Indication)4 | | | UEP9D | UEPQW | 1.15 | 21.29 | 15.49 | 2.85 | 2.67 | | | | | | |
| | | 2-Wire Voice Grade Port (Centrex/Msg Wtg Lamp Indication)4 | | | UEP9D | UEPQJ | 1.15 | 21.29 | 15.49 | 2.85 | 2.67 | | | | | | |
| | | 2-Wire Voice Grade Port (Centrex from diff Serving Wire Center) 2,3 | | | UEP9D | UEPQM | 1.15 | 21.29 | 15.49 | 2.85 | 2.67 | | | | | | |
| | | 2-Wire Voice Grade Port (Centrex/differ SWC /EBS-PSET)2,3,4 | | | UEP9D | UEPQO | 1.15 | 21.29 | 15.49 | 2.85 | 2.67 | | | | | | |
| | | 2-Wire Voice Grade Port (Centrex/differ SWC /EBS-M5009)2,3,4 | | | UEP9D | UEPQP | 1.15 | 21.29 | 15.49 | 2.85 | 2.67 | | | | | | |

## UNBUNDLED NETWORK ELEMENTS - Kentucky

| CATEGORY | RATE ELEMENTS | Interim | Zone | BCS | USOC | RATES ($) | | | | | Svc Order Submitted Elec per LSR | Svc Order Submitted Manually per LSR | Attachment: 2 | | Exhibit: A | |
|---|---|---|---|---|---|---|---|---|---|---|---|---|---|---|---|---|
| | | | | | | | | | | | | | Incremental Charge - Manual Svc Order vs. Electronic-1st | Incremental Charge - Manual Svc Order vs. Electronic-Add'l | Incremental Charge - Manual Svc Order vs. Electronic-Disc 1st | Incremental Charge - Manual Svc Order vs. Electronic-Disc Add'l |
| | | | | | | Rec | Nonrecurring | | Nonrecurring Disconnect | | OSS Rates ($) | | | | | |
| | | | | | | | First | Add'l | First | Add'l | SOMEC | SOMAN | SOMAN | SOMAN | SOMAN | SOMAN |
| | 2-Wire Voice Grade Port (Centrex/differ SWC /EBS-5209)2,3,4 | | | UEP9D | UEPQQ | 1.15 | 21.29 | 15.49 | 2.85 | 2.67 | | | | | | |
| | 2-Wire Voice Grade Port (Centrex/differ SWC /EBS-M5112)2,3,4 | | | UEP9D | UEPQR | 1.15 | 21.29 | 15.49 | 2.85 | 2.67 | | | | | | |
| | 2-Wire Voice Grade Port (Centrex/differ SWC /EBS-M5312)2,3,4 | | | UEP9D | UEPQS | 1.15 | 21.29 | 15.49 | 2.85 | 2.67 | | | | | | |
| | 2-Wire Voice Grade Port (Centrex/differ SWC /EBS-M5008)2,3,4 | | | UEP9D | UEPQ4 | 1.15 | 21.29 | 15.49 | 2.85 | 2.67 | | | | | | |
| | 2-Wire Voice Grade Port (Centrex/differ SWC /EBS-M5208)2,3,4 | | | UEP9D | UEPQ5 | 1.15 | 21.29 | 15.49 | 2.85 | 2.67 | | | | | | |
| | 2-Wire Voice Grade Port (Centrex/differ SWC /EBS-M5216)2,3,4 | | | UEP9D | UEPQ6 | 1.15 | 21.29 | 15.49 | 2.85 | 2.67 | | | | | | |
| | 2-Wire Voice Grade Port (Centrex/differ SWC /EBS-M5316)2,3,4 | | | UEP9D | UEPQ7 | 1.15 | 21.29 | 15.49 | 2.85 | 2.67 | | | | | | |
| | 2-Wire Voice Grade Port, Diff Serving Wire Center - 800 Service Term 2,3 | | | UEP9D | UEPQZ | 1.15 | 21.29 | 15.49 | 2.85 | 2.67 | | | | | | |
| | 2-Wire Voice Grade Port terminated in on Megalink or equivalent | | | UEP9D | UEPQ9 | 1.15 | 21.29 | 15.49 | 2.85 | 2.67 | | | | | | |
| | 2-Wire Voice Grade Port Terminated on 800 Service Term | | | UEP9D | UEPQ2 | 1.15 | 21.29 | 15.49 | 2.85 | 2.67 | | | | | | |
| **Local Switching** | | | | | | | | | | | | | | | | |
| | Centrex Intercom Funtionality, per port | | | UEP9D | URECS | 0.8873 | | | | | | | | | | |
| **Local Number Portability** | | | | | | | | | | | | | | | | |
| | Local Number Portability (1 per port) | | | UEP9D | LNPCC | 0.35 | | | | | | | | | | |
| **Features** | | | | | | | | | | | | | | | | |
| | All Standard Features Offered, per port | | | UEP9D | UEPVF | 0.00 | | | | | | | | | | |
| | All Select Features Offered, per port | | | UEP9D | UEPVS | 0.00 | 405.66 | | | | | | | | | |
| | All Centrex Control Features Offered, per port | | | UEP9D | UEPVC | 0.00 | | | | | | | | | | |
| **NARS** | | | | | | | | | | | | | | | | |
| | Unbundled Network Access Register - Combination | | | UEP9D | UARCX | 0.00 | 0.00 | 0.00 | 0.00 | 0.00 | | | | | | |
| | Unbundled Network Access Register - Inward | | | UEP9D | UAR1X | 0.00 | 0.00 | 0.00 | 0.00 | 0.00 | | | | | | |
| | Unbundled Network Access Register - Outdial | | | UEP9D | UAROX | 0.00 | 0.00 | 0.00 | 0.00 | 0.00 | | | | | | |
| **Miscellaneous Terminations** | | | | | | | | | | | | | | | | |
| **2-Wire Trunk Side** | | | | | | | | | | | | | | | | |
| | Trunk Side Terminations, each | | | UEP9D | CEND6 | 10.51 | 92.18 | 15.82 | 52.16 | 5.30 | | | | | | |
| **4-Wire Digital (1.544 Megabits)** | | | | | | | | | | | | | | | | |
| | DS1 Circuit Terminations, each | | | UEP9D | M1HD1 | 74.77 | 164.86 | 77.74 | 60.69 | 3.86 | | | | | | |
| | DS0 Channels Activiated per Channel | | | UEP9D | M1HDO | 0.00 | 15.09 | | | | | | | | | |
| **Interoffice Channel Mileage - 2-Wire** | | | | | | | | | | | | | | | | |
| | Interoffice Channel Facilities Termination | | | UEP9D | M1GBC | 29.11 | | | | | | | | | | |
| | Interoffice Channel mileage, per mile or fraction of mile | | | UEP9D | M1GBM | 0.01 | | | | | | | | | | |
| **Feature Activations (DS0) Centrex Loops on Channelized DS1 Service** | | | | | | | | | | | | | | | | |
| **D4 Channel Bank Feature Activations** | | | | | | | | | | | | | | | | |
| | Feature Activation on D-4 Channel Bank Centrex Loop Slot | | | UEP9D | 1PQWS | 0.62 | | | | | | | | | | |
| | Feature Activation on D-4 Channel Bank FX line Side Loop Slot | | | UEP9D | 1PQW6 | 0.62 | | | | | | | | | | |
| | Feature Activation on D-4 Channel Bank FX Trunk Side Loop Slot | | | UEP9D | 1PQW7 | 0.62 | | | | | | | | | | |
| | Feature Activation on D-4 Channel Bank Centrex Loop Slot - Different Wire Center | | | UEP9D | 1PQWP | 0.62 | | | | | | | | | | |
| | Feature Activation on D-4 Channel Bank Private Line Loop Slot | | | UEP9D | 1PQWV | 0.62 | | | | | | | | | | |
| | Feature Activation on D-4 Channel Bank Tjie Line/Trunk Loop Slot | | | UEP9D | 1PQWQ | 0.62 | | | | | | | | | | |
| | Feature Activation on D-4 Channel Bank WATS Loop Slot | | | UEP9D | 1PQWA | 0.62 | | | | | | | | | | |
| **Non-Recurring Charges (NRC) Associated with UNE-P Centrex** | | | | | | | | | | | | | | | | |
| | NRC Conversion Currently Combined Switch-As-Is with allowed changes, per port | | | UEP9D | USAC2 | | 0.102 | 0.102 | | | | | | | | |
| | Conversion of existing Centrex Common Block, each | | | UEP9D | USACN | | 18.95 | 8.32 | | | | | | | | |
| | New Centrex Standard Common Block | | | UEP9D | M1ACS | 0.00 | 669.80 | 78.32 | 111.05 | 13.27 | | | | | | |

| UNBUNDLED NETWORK ELEMENTS - Kentucky | | | | | | | | | | | | | Attachment: 2 | | Exhibit: A | |
|---|---|---|---|---|---|---|---|---|---|---|---|---|---|---|---|---|
| CATEGORY | RATE ELEMENTS | Interim | Zone | BCS | USOC | RATES ($) | | | | | Svc Order Submitted Elec per LSR | Svc Order Submitted Manually per LSR | Incremental Charge - Manual Svc Order vs. Electronic-1st | Incremental Charge - Manual Svc Order vs. Electronic-Add'l | Incremental Charge - Manual Svc Order vs. Electronic-Disc 1st | Incremental Charge - Manual Svc Order vs. Electronic-Disc Add'l |
| | | | | | | Rec | Nonrecurring | | Nonrecurring Disconnect | | OSS Rates ($) | | | | | |
| | | | | | | | First | Add'l | First | Add'l | SOMEC | SOMAN | SOMAN | SOMAN | SOMAN | SOMAN |
| | New Centrex Customized Common Block | | | UEP9D | M1ACC | 0.00 | 669.80 | 78.32 | 111.05 | 13.27 | | | | | | |
| | NAR Establishment Charge, Per Occasion | | | UEP9D | URECA | 0.00 | 72.75 | | | | | | | | | |
| **Additional Non-Recurring Charges (NRC)** | | | | | | | | | | | | | | | | |
| | Unbundled Miscellaneous Rate Element, Tag Loop at End Use Premise | | | UEP9D | URETL | | 8.33 | 0.83 | | | | | | | | |
| | Unbundled Miscellaneous Rate Element, Tag Design Loop at End Use Premise | | | UEP9D | URETN | | 11.21 | 1.10 | | | | | | | | |
| **UNE-P CENTREX - EWSD (Valid in AL, FL, KY, LA, MS & TN)** | | | | | | | | | | | | | | | | |
| **2-Wire VG Loop/2-Wire Voice Grade Port (Centrex) Combo** | | | | | | | | | | | | | | | | |
| **UNE Port/Loop Combination Rates (Non-Design)** | | | | | | | | | | | | | | | | |
| | 2-Wire VG Loop/2-Wire Voice Grade Port (Centrex) Port Combo - Non-Design | | 1 | UEP9E | | 10.79 | | | | | | | | | | |
| | 2-Wire VG Loop/2-Wire Voice Grade Port (Centrex)Port Combo - Non-Design | | 2 | UEP9E | | 15.52 | | | | | | | | | | |
| | 2-Wire VG Loop/2-Wire Voice Grade Port (Centrex)Port Combo - Non-Design | | 3 | UEP9E | | 31.74 | | | | | | | | | | |
| **UNE Port/Loop Combination Rates (Design)** | | | | | | | | | | | | | | | | |
| | 2-Wire VG Loop/2-Wire Voice Grade Port (Centrex) Port Combo - Design | | 1 | UEP9E | | 13.82 | | | | | | | | | | |
| | 2-Wire VG Loop/2-Wire Voice Grade Port (Centrex)Port Combo - Design | | 2 | UEP9E | | 18.60 | | | | | | | | | | |
| | 2-Wire VG Loop/2-Wire Voice Grade Port (Centrex)Port Combo - Design | | 3 | UEP9E | | 34.37 | | | | | | | | | | |
| **UNE Loop Rate** | | | | | | | | | | | | | | | | |
| | 2-Wire Voice Grade Loop (SL 1) - Zone 1 | | 1 | UEP9E | UECS1 | 9.64 | | | | | | | | | | |
| | 2-Wire Voice Grade Loop (SL 1) - Zone 2 | | 2 | UEP9E | UECS1 | 14.37 | | | | | | | | | | |
| | 2-Wire Voice Grade Loop (SL 1) - Zone 3 | | 3 | UEP9E | UECS1 | 30.59 | | | | | | | | | | |
| | 2-Wire Voice Grade Loop (SL 2) - Zone 1 | | 1 | UEP9E | UECS2 | 12.67 | | | | | | | | | | |
| | 2-Wire Voice Grade Loop (SL 2) - Zone 2 | | 2 | UEP9E | UECS2 | 17.45 | | | | | | | | | | |
| | 2-Wire Voice Grade Loop (SL 2) - Zone 3 | | 3 | UEP9E | UECS2 | 33.22 | | | | | | | | | | |
| **UNE Port Rate** | | | | | | | | | | | | | | | | |
| **AL, FL, KY, LA, MS, & TN only** | | | | | | | | | | | | | | | | |
| | 2-Wire Voice Grade Port (Centrex ) Basic Local Area | | | UEP9E | UEPYA | 1.15 | 21.29 | 15.49 | 2.85 | 2.67 | | | | | | |
| | 2-Wire Voice Grade Port (Centrex 800 termination)Basic Local Area | | | UEP9E | UEPYB | 1.15 | 21.29 | 15.49 | 2.85 | 2.67 | | | | | | |
| | 2-Wire Voice Grade Port (Centrex with Caller ID)1Basic Local Area | | | UEP9E | UEPYH | 1.15 | 21.29 | 15.49 | 2.85 | 2.67 | | | | | | |
| | 2-Wire Voice Grade Port (Centrex from diff Serving Wire Center)2,3 Basic Local Area | | | UEP9E | UEPYM | 1.15 | 21.29 | 15.49 | 2.85 | 2.67 | | | | | | |
| | 2-Wire Voice Grade Port, Diff Serving Wire Center 2,3 - 800 Service Term - Basic Local Area | | | UEP9E | UEPYZ | 1.15 | 21.29 | 15.49 | 2.85 | 2.67 | | | | | | |
| | 2-Wire Voice Grade Port terminated in on Megalink or equivalent - Basic Local Area | | | UEP9E | UEPY9 | 1.15 | 21.29 | 15.49 | 2.85 | 2.67 | | | | | | |
| | 2-Wire Voice Grade Port Terminated on 800 Service Term - Basic Local Area | | | UEP9E | UEPY2 | 1.15 | 21.29 | 15.49 | 2.85 | 2.67 | | | | | | |
| **AL, KY, LA, MS, & TN Only** | | | | | | | | | | | | | | | | |
| | 2-Wire Voice Grade Port (Centrex ) | | | UEP9E | UEPQA | 1.15 | 21.29 | 15.49 | 2.85 | 2.67 | | | | | | |
| | 2-Wire Voice Grade Port (Centrex 800 termination) | | | UEP9E | UEPQB | 1.15 | 21.29 | 15.49 | 2.85 | 2.67 | | | | | | |
| | 2-Wire Voice Grade Port (Centrex with Caller ID)1 | | | UEP9E | UEPQH | 1.15 | 21.29 | 15.49 | 2.85 | 2.67 | | | | | | |
| | 2-Wire Voice Grade Port (Centrex from diff Serving Wire Center)2,3 | | | UEP9E | UEPQM | 1.15 | 21.29 | 15.49 | 2.85 | 2.67 | | | | | | |
| | 2-Wire Voice Grade Port, Diff Serving Wire Center 2,3 - 800 Service Term | | | UEP9E | UEPQZ | 1.15 | 21.29 | 15.49 | 2.85 | 2.67 | | | | | | |
| | 2-Wire Voice Grade Port terminated in on Megalink or equivalent | | | UEP9E | UEPQ9 | 1.15 | 21.29 | 15.49 | 2.85 | 2.67 | | | | | | |
| | 2-Wire Voice Grade Port Terminated on 800 Service Term | | | UEP9E | UEPQ2 | 1.15 | 21.29 | 15.49 | 2.85 | 2.67 | | | | | | |
| **Local Switching** | | | | | | | | | | | | | | | | |
| | Centrex Intercom Funtionality, per port | | | UEP9E | URECS | 0.8873 | | | | | | | | | | |
| **Local Number Portability** | | | | | | | | | | | | | | | | |

CCCS 277 of 1253

## UNBUNDLED NETWORK ELEMENTS - Kentucky

| CATEGORY | RATE ELEMENTS | Interim | Zone | BCS | USOC | RATES ($) | | | | | Svc Order Submitted Elec per LSR | Svc Order Submitted Manually per LSR | Attachment: 2 | | Exhibit: A | |
|---|---|---|---|---|---|---|---|---|---|---|---|---|---|---|---|---|
| | | | | | | | | | | | | | Incremental Charge - Manual Svc Order vs. Electronic-1st | Incremental Charge - Manual Svc Order vs. Electronic-Add'l | Incremental Charge - Manual Svc Order vs. Electronic-Disc 1st | Incremental Charge - Manual Svc Order vs. Electronic-Disc Add'l |
| | | | | | | Rec | Nonrecurring | | Nonrecurring Disconnect | | OSS Rates ($) | | | | | |
| | | | | | | | First | Add'l | First | Add'l | SOMEC | SOMAN | SOMAN | SOMAN | SOMAN | SOMAN |
| | Local Number Portability (1 per port) | | | UEP9E | LNPCC | 0.35 | | | | | | | | | | |
| **Features** | | | | | | | | | | | | | | | | |
| | All Standard Features Offered, per port | | | UEP9E | UEPVF | 0.00 | | | | | | | | | | |
| | All Select Features Offered, per port | | | UEP9E | UEPVS | 0.00 | 405.66 | | | | | | | | | |
| | All Centrex Control Features Offered, per port | | | UEP9E | UEPVC | 0.00 | | | | | | | | | | |
| **NARS** | | | | | | | | | | | | | | | | |
| | Unbundled Network Access Register - Combination | | | UEP9E | UARCX | 0.00 | 0.00 | 0.00 | 0.00 | 0.00 | | | | | | |
| | Unbundled Network Access Register - Indial | | | UEP9E | UAR1X | 0.00 | 0.00 | 0.00 | 0.00 | 0.00 | | | | | | |
| | Unbundled Network Access Register - Outdial | | | UEP9E | UAROX | 0.00 | 0.00 | 0.00 | 0.00 | 0.00 | | | | | | |
| **Miscellaneous Terminations** | | | | | | | | | | | | | | | | |
| **2-Wire Trunk Side** | | | | | | | | | | | | | | | | |
| | Trunk Side Terminations, each | | | UEP9E | CEND6 | 10.51 | 92.18 | 15.82 | 52.16 | 5.30 | | | | | | |
| **4-Wire Digital (1.544 Megabits)** | | | | | | | | | | | | | | | | |
| | DS1 Circuit Terminations, each | | | UEP9E | M1HD1 | 74.77 | 164.86 | 77.74 | 60.69 | 3.86 | | | | | | |
| | DS0 Channel Activated Per Channel | | | UEP9E | M1HDO | 0.00 | 15.09 | | | | | | | | | |
| **Interoffice Channel Mileage - 2-Wire** | | | | | | | | | | | | | | | | |
| | Interoffice Channel Facilities Termination | | | UEP9E | M1GBC | 29.11 | | | | | | | | | | |
| | Interoffice Channel mileage, per mile or fraction of mile | | | UEP9E | M1GBM | 0.01 | | | | | | | | | | |
| **Feature Activations (DS0) Centrex Loops on Channelized DS1 Service** | | | | | | | | | | | | | | | | |
| **D4 Channel Bank Feature Activations** | | | | | | | | | | | | | | | | |
| | Feature Activation on D-4 Channel Bank Centrex Loop Slot | | | UEP9E | 1PQWS | 0.62 | | | | | | | | | | |
| | Feature Activation on D-4 Channel Bank FX line Side Loop Slot | | | UEP9E | 1PQW6 | 0.62 | | | | | | | | | | |
| | Feature Activation on D-4 Channel Bank FX Trunk Side Loop Slot | | | UEP9E | 1PQW7 | 0.62 | | | | | | | | | | |
| | Feature Activation on D-4 Channel Bank Centrex Loop Slot - Different Wire Center | | | UEP9E | 1PQWP | 0.62 | | | | | | | | | | |
| | Feature Activation on D-4 Channel Bank Private Line Loop Slot | | | UEP9E | 1PQWV | 0.62 | | | | | | | | | | |
| | Feature Activation on D-4 Channel Bank Tjie Line/Trunk Loop Slot | | | UEP9E | 1PQWQ | 0.62 | | | | | | | | | | |
| | Feature Activation on D-4 Channel Bank WATS Loop Slot | | | UEP9E | 1PQWA | 0.62 | | | | | | | | | | |
| **Non-Recurring Charges (NRC) Associated with UNE-P Centrex** | | | | | | | | | | | | | | | | |
| | NRC Conversion Currently Combined Switch-As-Is with allowed changes, per port | | | UEP9E | USAC2 | | 0.102 | 0.102 | | | | | | | | |
| | Conversion of Existing Centrex Common Block, each | | | UEP9E | USACN | | 18.95 | 8.32 | | | | | | | | |
| | New Centrex Standard Common Block | | | UEP9E | M1ACS | 0.00 | 669.80 | 78.32 | 111.05 | 13.27 | | | | | | |
| | New Centrex Customized Common Block | | | UEP9E | M1ACC | 0.00 | 669.80 | 78.32 | 111.05 | 13.27 | | | | | | |
| | NAR Establishment Charge, Per Occasion | | | UEP9E | URECA | 0.00 | 72.75 | | | | | | | | | |
| **Additional Non-Recurring Charges (NRC)** | | | | | | | | | | | | | | | | |
| | Unbundled Miscellaneous Rate Element, Tag Loop at End Use Premise | | | UEP9E | URETL | | 8.33 | 0.83 | | | | | | | | |
| | Unbundled Miscellaneous Rate Element, Tag Design Loop at End Use Premise | | | UEP9E | URETN | | 11.21 | 1.10 | | | | | | | | |
| **UNE-P CENTREX - DCO - Valid in AL, KY, LA, MS, & TN)** | | | | | | | | | | | | | | | | |
| **2-Wire VG Loop/2-Wire Voice Grade Port (Centrex) Combo** | | | | | | | | | | | | | | | | |
| **UNE Port/Loop Combination Rates (Non-Design)** | | | | | | | | | | | | | | | | |
| | 2-Wire VG Loop/2-Wire Voice Grade Port (Centrex) Port Combo - Non-Design | | 1 | UEP93 | | 10.79 | | | | | | | | | | |
| | 2-Wire VG Loop/2-Wire Voice Grade Port (Centrex)Port Combo - Non-Design | | 2 | UEP93 | | 15.52 | | | | | | | | | | |
| | 2-Wire VG Loop/2-Wire Voice Grade Port (Centrex)Port Combo - Non-Design | | 3 | UEP93 | | 31.74 | | | | | | | | | | |
| **UNE Port/Loop Combination Rates (Design)** | | | | | | | | | | | | | | | | |
| | 2-Wire VG Loop/2-Wire Voice Grade Port (Centrex) Port Combo - Design | | 1 | UEP93 | | 13.82 | | | | | | | | | | |
| | 2-Wire VG Loop/2-Wire Voice Grade Port (Centrex)Port Combo - Design | | 2 | UEP93 | | 18.60 | | | | | | | | | | |

## UNBUNDLED NETWORK ELEMENTS - Kentucky

| CATEGORY | RATE ELEMENTS | Interim | Zone | BCS | USOC | RATES ($) | | | | | Svc Order Submitted Elec per LSR | Svc Order Submitted Manually per LSR | Attachment: 2 | | Exhibit: A | |
|---|---|---|---|---|---|---|---|---|---|---|---|---|---|---|---|---|
| | | | | | | | | | | | | | Incremental Charge - Manual Svc Order vs. Electronic-1st | Incremental Charge - Manual Svc Order vs. Electronic-Add'l | Incremental Charge - Manual Svc Order vs. Electronic-Disc 1st | Incremental Charge - Manual Svc Order vs. Electronic-Disc Add'l |
| | | | | | | Rec | Nonrecurring | | Nonrecurring Disconnect | | OSS Rates ($) | | | | | |
| | | | | | | | First | Add'l | First | Add'l | SOMEC | SOMAN | SOMAN | SOMAN | SOMAN | SOMAN |
| | 2-Wire VG Loop/2-Wire Voice Grade Port (Centrex)Port Combo - Design | | 3 | UEP93 | | 34.37 | | | | | | | | | | |
| **UNE Loop Rate** | | | | | | | | | | | | | | | | |
| | 2-Wire Voice Grade Loop (SL 1) - Zone 1 | | 1 | UEP93 | UECS1 | 9.64 | | | | | | | | | | |
| | 2-Wire Voice Grade Loop (SL 1) - Zone 2 | | 2 | UEP93 | UECS1 | 14.37 | | | | | | | | | | |
| | 2-Wire Voice Grade Loop (SL 1) - Zone 3 | | 3 | UEP93 | UECS1 | 30.59 | | | | | | | | | | |
| | 2-Wire Voice Grade Loop (SL 2) - Zone 1 | | 1 | UEP93 | UECS2 | 12.67 | | | | | | | | | | |
| | 2-Wire Voice Grade Loop (SL 2) - Zone 2 | | 2 | UEP93 | UECS2 | 17.45 | | | | | | | | | | |
| | 2-Wire Voice Grade Loop (SL 2) - Zone 3 | | 3 | UEP93 | UECS2 | 33.22 | | | | | | | | | | |
| **UNE Port Rate** | | | | | | | | | | | | | | | | |
| **AL, KY, LA, MS, & TN only** | | | | | | | | | | | | | | | | |
| | 2-Wire Voice Grade Port (Centrex ) Basic Local Area | | | UEP93 | UEPYA | 1.15 | 21.29 | 15.49 | 2.85 | 2.67 | | | | | | |
| | 2-Wire Voice Grade Port (Centrex 800 termination)Basic Local Area | | | UEP93 | UEPYB | 1.15 | 21.29 | 15.49 | 2.85 | 2.67 | | | | | | |
| | 2-Wire Voice Grade Port (Centrex with Caller ID)1Basic Local Area | | | UEP93 | UEPYH | 1.15 | 21.29 | 15.49 | 2.85 | 2.67 | | | | | | |
| | 2-Wire Voice Grade Port (Centrex from diff Serving Wire Center)2,3 Basic Local Area | | | UEP93 | UEPYM | 1.15 | 21.29 | 15.49 | 2.85 | 2.67 | | | | | | |
| | 2-Wire Voice Grade Port, Diff Serving Wire Center - 2,3 - 800 Service Term - Basic Local Area | | | UEP93 | UEPYZ | 1.15 | 21.29 | 15.49 | 2.85 | 2.67 | | | | | | |
| | 2-Wire Voice Grade Port terminated in on Megalink or equivalent - Basic Local Area | | | UEP93 | UEPY9 | 1.15 | 21.29 | 15.49 | 2.85 | 2.67 | | | | | | |
| | 2-Wire Voice Grade Port Terminated on 800 Service Term - Basic Local Area | | | UEP93 | UEPY2 | 1.15 | 21.29 | 15.49 | 2.85 | 2.67 | | | | | | |
| | 2-Wire Voice Grade Port (Centrex ) | | | UEP93 | UEPQA | 1.15 | 21.29 | 15.49 | 2.85 | 2.67 | | | | | | |
| | 2-Wire Voice Grade Port (Centrex 800 termination) | | | UEP93 | UEPQB | 1.15 | 21.29 | 15.49 | 2.85 | 2.67 | | | | | | |
| | 2-Wire Voice Grade Port (Centrex with Caller ID)1 | | | UEP93 | UEPQH | 1.15 | 21.29 | 15.49 | 2.85 | 2.67 | | | | | | |
| | 2-Wire Voice Grade Port (Centrex from diff Serving Wire Center)2,3 | | | UEP93 | UEPQM | 1.15 | 21.29 | 15.49 | 2.85 | 2.67 | | | | | | |
| | 2-Wire Voice Grade Port, Diff Serving Wire Center - 2,3 -800 Service Term | | | UEP93 | UEPQZ | 1.15 | 21.29 | 15.49 | 2.85 | 2.67 | | | | | | |
| | 2-Wire Voice Grade Port terminated in on Megalink or equivalent | | | UEP93 | UEPQ9 | 1.15 | 21.29 | 15.49 | 2.85 | 2.67 | | | | | | |
| | 2-Wire Voice Grade Port Terminated on 800 Service Term | | | UEP93 | UEPQ2 | 1.15 | 21.29 | 15.49 | 2.85 | 2.67 | | | | | | |
| **Local Switching** | | | | | | | | | | | | | | | | |
| | Centrex Intercom Funtionality, per port | | | UEP93 | URECS | 0.8873 | | | | | | | | | | |
| **Local Number Portability** | | | | | | | | | | | | | | | | |
| | Local Number Portability (1 per port) | | | UEP93 | LNPCC | 0.35 | | | | | | | | | | |
| **Features** | | | | | | | | | | | | | | | | |
| | All Standard Features Offered, per port | | | UEP93 | UEPVF | 0.00 | | | | | | | | | | |
| | All Centrex Control Features Offered, per port | | | UEP93 | UEPVC | 0.00 | | | | | | | | | | |
| **NARS** | | | | | | | | | | | | | | | | |
| | Unbundled Network Access Register - Combination | | | UEP93 | UARCX | 0.00 | 0.00 | 0.00 | 0.00 | 0.00 | | | | | | |
| | Unbundled Network Access Register - Indial | | | UEP93 | UAR1X | 0.00 | 0.00 | 0.00 | 0.00 | 0.00 | | | | | | |
| | Unbundled Network Access Register - Outdial | | | UEP93 | UAROX | 0.00 | 0.00 | 0.00 | 0.00 | 0.00 | | | | | | |
| **Miscellaneous Terminations** | | | | | | | | | | | | | | | | |
| **2-Wire Trunk Side** | | | | | | | | | | | | | | | | |
| | Trunk Side Terminations, each | | | UEP93 | CEND6 | 10.51 | 92.18 | 15.82 | 52.16 | 5.30 | | | | | | |
| **4-Wire Digital (1.544 Megabits)** | | | | | | | | | | | | | | | | |
| | DS1 Circuit Terminations, each | | | UEP93 | M1HD1 | 74.77 | 164.86 | 77.74 | 60.69 | 3.86 | | | | | | |
| | DS0 Channels Activated, Per Channel | | | UEP93 | M1HDO | 0.00 | 15.09 | | | | | | | | | |
| **Interoffice Channel Mileage - 2-Wire** | | | | | | | | | | | | | | | | |
| | Interoffice Channel Facilities Termination | | | UEP93 | M1GBC | 29.11 | | | | | | | | | | |
| | Interoffice Channel mileage, per mile or fraction of mile | | | UEP93 | M1GBM | 0.01 | | | | | | | | | | |
| **Feature Activations (DS0) Centrex Loops on Channelized DS1 Service** | | | | | | | | | | | | | | | | |
| **D4 Channel Bank Feature Activations** | | | | | | | | | | | | | | | | |
| | Feature Activation on D-4 Channel Bank Centrex Loop Slot | | | UEP93 | 1PQWS | 0.62 | | | | | | | | | | |
| | Feature Activation on D-4 Channel Bank FX Line Side Loop Slot | | | UEP93 | 1PQW6 | 0.62 | | | | | | | | | | |

| UNBUNDLED NETWORK ELEMENTS - Kentucky | | | | | | | | | | | | | Attachment: 2 | | Exhibit: A | |
|---|---|---|---|---|---|---|---|---|---|---|---|---|---|---|---|---|
| CATEGORY | | RATE ELEMENTS | Interim | Zone | BCS | USOC | RATES ($) | | | | Svc Order Submitted Elec per LSR | Svc Order Submitted Manually per LSR | Incremental Charge - Manual Svc Order vs. Electronic-1st | Incremental Charge - Manual Svc Order vs. Electronic-Add'l | Incremental Charge - Manual Svc Order vs. Electronic-Disc 1st | Incremental Charge - Manual Svc Order vs. Electronic-Disc Add'l |
| | | | | | | | Rec | Nonrecurring | | Nonrecurring Disconnect | | | OSS Rates ($) | | | |
| | | | | | | | | First | Add'l | First | Add'l | SOMEC | SOMAN | SOMAN | SOMAN | SOMAN | SOMAN |
| | | Feature Activation on D-4 Channel Bank FX Trunk Side Loop Slot | | | UEP93 | 1PQW7 | 0.62 | | | | | | | | | | |
| | | Feature Activation on D-4 Channel Bank Centrex Loop Slot - Different Wire Center | | | UEP93 | 1PQWP | 0.62 | | | | | | | | | | |
| | | Feature Activation on D-4 Channel Bank Private Line Loop Slot | | | UEP93 | 1PQWV | 0.62 | | | | | | | | | | |
| | | Feature Activation on D-4 Channel Bank Tie Line/Trunk Loop Slot | | | UEP93 | 1PQWQ | 0.62 | | | | | | | | | | |
| | | Feature Activation on D-4 Channel Bank WATS Loop Slot | | | UEP93 | 1PQWA | 0.62 | | | | | | | | | | |
| | **Non-Recurring Charges (NRC) Associated with UNE-P Centrex** | | | | | | | | | | | | | | | | |
| | | NRC Conversion Currently Combined Switch-As-Is with allowed changes, per port | | | UEP93 | USAC2 | | 0.102 | 0.102 | | | | | | | | |
| | | Conversion of Existing Centrex Common Block, each | | | UEP93 | USACN | | 18.95 | 8.32 | | | | | | | | |
| | | New Centrex Standard Common Block | | | UEP93 | M1ACS | 0.00 | 669.80 | 78.32 | 111.05 | 13.27 | | | | | | |
| | | New Centrex Customized Common Block | | | UEP93 | M1ACC | 0.00 | 669.80 | 78.32 | 111.05 | 13.27 | | | | | | |
| | | NAR Establishment Charge, Per Occasion | | | UEP93 | URECA | 0.00 | 72.75 | | | | | | | | | |
| | **Additional Non-Recurring Charges (NRC)** | | | | | | | | | | | | | | | | |
| | | Unbundled Miscellaneous Rate Element, Tag Loop at End Use Premise | | | UEP93 | URETL | | 8.33 | 0.83 | | | | | | | | |
| | | Unbundled Miscellaneous Rate Element, Tag Design Loop at End Use Premise | | | UEP93 | URETN | | 11.21 | 1.10 | | | | | | | | |
| | **Note 1 - Required Port for Centrex Control in 1AESS, 5ESS & EWSD** | | | | | | | | | | | | | | | | |
| | **Note 2 - Requres Interoffice Channel Mileage** | | | | | | | | | | | | | | | | |
| | **Note 3 - Installation is combination of Installation charge for SL2 Loop and Port** | | | | | | | | | | | | | | | | |
| | **Note 4 - Requires Specific Customer Premises Equipment** | | | | | | | | | | | | | | | | |
| | **Note: Rates displaying an "R" in Interim column are interim and subject to rate true-up as set forth in General Terms and Conditions.** | | | | | | | | | | | | | | | | |

| UNBUNDLED NETWORK ELEMENTS - Louisiana | | | | | | | | | | | | | | Attachment: 2 | | Exhibit: A | |
|---|---|---|---|---|---|---|---|---|---|---|---|---|---|---|---|---|---|
| CATEGORY | RATE ELEMENTS | Interim | Zone | BCS | USOC | RATES ($) | | | | | Svc Order Submitted Elec per LSR | Svc Order Submitted Manually per LSR | Incremental Charge - Manual Svc Order vs. Electronic- 1st | Incremental Charge - Manual Svc Order vs. Electronic- Add'l | Incremental Charge - Manual Svc Order vs. Electronic- Disc 1st | Incremental Charge - Manual Svc Order vs. Electronic- Disc Add'l |
| | | | | | | Rec | Nonrecurring | | Nonrecurring Disconnect | | OSS Rates ($) | | | | | |
| | | | | | | | First | Add'l | First | Add'l | SOMEC | SOMAN | SOMAN | SOMAN | SOMAN | SOMAN |
| | The "Zone" shown in the sections for stand-alone loops or loops as part of a combination refers to Geographically Deaveraged UNE Zones. To view Geographically Deaveraged UNE Zone Designations by Central Office, refer to Internet Website: http://www.interconnection.bellsouth.com/become_a_clec/html/interconnection.htm | | | | | | | | | | | | | | | |
| OPERATIONAL SUPPORT SYSTEMS (OSS) - "REGIONAL RATES" | | | | | | | | | | | | | | | | | |
| | NOTE: (1) CLEC should contact its contract negotiator if it prefers the "state specific" OSS charges as ordered by the State Commissions. The OSS charges currently contained in this rate exhibit are the BellSouth "regional" service ordering charges. CLEC may elect either the state specific Commission ordered rates for the service ordering charges, or CLEC may elect the regional service ordering charge, however, CLEC can not obtain a mixture of the two regardless if CLEC has a interconnection contract established in each of the 9 states. | | | | | | | | | | | | | | | |
| | NOTE: (2) Any element that can be ordered electronically will be billed according to the SOMEC rate listed in this category. Please refer to BellSouth's Local Ordering Handbook (LOH) to determine if a product can be ordered electronically. For those elements that cannot be ordered electronically at present per the LOH, the listed SOMEC rate in this category reflects the charge that would be billed to a CLEC once electronic ordering capabilities come on-line for that element. Otherwise, the manual ordering charge, SOMAN, will be applied to a CLECs bill when it submits an LSR to BellSouth. | | | | | | | | | | | | | | | |
| | OSS - Electronic Service Order Charge, Per Local Service Request (LSR) - UNE Only | | | | SOMEC | | 3.50 | 0.00 | 3.50 | 0.00 | | | | | | |
| | OSS - Manual Service Order Charge, Per Local Service Request (LSR) - UNE Only | | | | SOMAN | | 15.20 | 0.00 | 15.20 | 0.00 | | | | | | |
| UNE SERVICE DATE ADVANCEMENT CHARGE | | | | | | | | | | | | | | | | | |
| | NOTE: The Expedite charge will be maintained commensurate with BellSouth's FCC No.1 Tariff, Section 5 as applicable. | | | | | | | | | | | | | | | |
| | UNE Expedite Charge per Circuit or Line Assignable USOC, per Day | | | UAL, UEANL, UCL, UEF, UDF, UEQ, UDL, UENTW, UDN, UEA, UHL, ULC, USL, U1T12, U1T48, U1TD1, U1TD3, U1TDX, U1TO3, U1TS1, U1TVX, UC1BC, UC1BL, UC1CC, UC1CL, UC1DC, UC1DL, UC1EC, UC1EL, UC1FC, UC1FL, UC1GC, UC1GL, UC1HC, UC1HL, UDL12, UDL48, UDLO3, UDLSX, UE3, ULD12, ULD48, ULDD1, ULDD3, ULDDX, ULDO3, ULDS1, ULDVX, UNC1X, UNC3X, UNCDX, UNCNX, UNCSX, UNCVX, UNLD1, UNLD3, UXTD1, UXTD3, UXTS1, U1TUC, U1TUD, U1TUB, U1TUA | SDASP | | 200.00 | | | | | | | | | |
| UNBUNDLED EXCHANGE ACCESS LOOP | | | | | | | | | | | | | | | | | |
| | 2-WIRE ANALOG VOICE GRADE LOOP | | | | | | | | | | | | | | | | |
| | 2-Wire Analog Voice Grade Loop - Service Level 1- Zone 1 | | 1 | UEANL | UEAL2 | 12.90 | 36.54 | 16.87 | | | | | | | | |
| | 2-Wire Analog Voice Grade Loop - Service Level 1- Zone 2 | | 2 | UEANL | UEAL2 | 23.33 | 36.54 | 16.87 | | | | | | | | |
| | 2-Wire Analog Voice Grade Loop - Service Level 1- Zone 3 | | 3 | UEANL | UEAL2 | 48.43 | 36.54 | 16.87 | | | | | | | | |
| | 2-Wire Analog Voice Grade Loop - Service Level 1- Zone 1 | | 1 | UEANL | UEASL | 12.90 | 36.54 | 16.87 | | | | | | | | |
| | 2-Wire Analog Voice Grade Loop - Service Level 1- Zone 2 | | 2 | UEANL | UEASL | 23.33 | 36.54 | 16.87 | | | | | | | | |
| | 2-Wire Analog Voice Grade Loop - Service Level 1- Zone 3 | | 3 | UEANL | UEASL | 48.43 | 36.54 | 16.87 | | | | | | | | |
| | Unbundled Miscellaneous Rate Element, Tag Loop at End User Premise | | | UEANL | URETL | | 8.33 | 0.83 | | | | | | | | |
| | Loop Testing - Basic 1st Half Hour | | | UEANL | URET1 | | 33.17 | 33.17 | | | | | | | | |
| | Loop Testing - Basic Additional Half Hour | | | UEANL | URETA | | 19.28 | 19.28 | | | | | | | | |

| UNBUNDLED NETWORK ELEMENTS - Louisiana | | | | | | | | | | | | | | Attachment: 2 | | Exhibit: A | |
|---|---|---|---|---|---|---|---|---|---|---|---|---|---|---|---|---|---|
| CATEGORY | | RATE ELEMENTS | Interim | Zone | BCS | USOC | RATES ($) | | | | | Svc Order Submitted Elec per LSR | Svc Order Submitted Manually per LSR | Incremental Charge - Manual Svc Order vs. Electronic-1st | Incremental Charge - Manual Svc Order vs. Electronic-Add'l | Incremental Charge - Manual Svc Order vs. Electronic-Disc 1st | Incremental Charge - Manual Svc Order vs. Electronic-Disc Add'l |
| | | | | | | | Rec | Nonrecurring | | Nonrecurring Disconnect | | OSS Rates ($) | | | | | |
| | | | | | | | | First | Add'l | First | Add'l | SOMEC | SOMAN | SOMAN | SOMAN | SOMAN | SOMAN |
| | | CLEC to CLEC Conversion Charge Without Outside Dispatch (UVL-SL1) | | | UEANL | UREWO | | 15.75 | 8.93 | | | | | | | | |
| | | Unbundled Voice Loop, Non-Design Voice Loop, billing for BST providing make-up (Engineering Information - E.I.) | | | UEANL | UEANM | | 13.04 | 13.04 | | | | | | | | |
| | | Manual Order Coordination for UVL-SL1s (per loop) | | | UEANL | UEAMC | | 7.92 | 7.92 | | | | | | | | |
| | | Order Coordination for Specified Conversion Time for UVL-SL1 (per LSR) | | | UEANL | OCOSL | | 17.56 | 17.56 | | | | | | | | |
| | 2-WIRE Unbundled COPPER LOOP | | | | | | | | | | | | | | | | |
| | | 2-Wire Unbundled Copper Loop - Non-Designed Zone 1 | | 1 | UEQ | UEQ2X | 12.40 | 35.27 | 15.60 | | | | | | | | |
| | | 2 Wire Unbundled Copper Loop - Non-Designed - Zone 2 | | 2 | UEQ | UEQ2X | 14.32 | 35.27 | 15.60 | | | | | | | | |
| | | 2 Wire Unbundled Copper Loop - Non-Designed - Zone 3 | | 3 | UEQ | UEQ2X | 16.87 | 35.27 | 15.60 | | | | | | | | |
| | | Unbundled Miscellaneous Rate Element, Tag Loop at End User Premise | | | UEQ | URETL | | 8.33 | 0.83 | | | | | | | | |
| | | Manual Order Coordination 2 Wire Unbundled Copper Loop - Non-Designed (per loop) | | | UEQ | USBMC | | 7.92 | 7.92 | | | | | | | | |
| | | Unbundled Copper Loop, Non-Design Copper Loop, billing for BST providing make-up (Engineering Information - E.I.) | | | UEQ | UEQMU | | 13.04 | 13.04 | | | | | | | | |
| | | Loop Testing - Basic 1st Half Hour | | | UEQ | URET1 | | 33.17 | 33.17 | | | | | | | | |
| | | Loop Testing - Basic Additional Half Hour | | | UEQ | URETA | | 19.28 | 19.28 | | | | | | | | |
| | | CLEC to CLEC Conversion Charge Without Outside Dispatch (UCL-ND) | | | UEQ | UREWO | | 14.25 | 7.42 | | | | | | | | |
| UNBUNDLED EXCHANGE ACCESS LOOP | | | | | | | | | | | | | | | | | |
| | 2-WIRE ANALOG VOICE GRADE LOOP | | | | | | | | | | | | | | | | |
| | | 2 Wire Analog Voice Grade Loop-Service Level 1-Line Splitting-Zone 1 | | 1 | UEPSR UEPSB | UEALS | 12.90 | 36.54 | 16.87 | 0.00 | 0.00 | | | | | | |
| | | 2 Wire Analog Voice Grade Loop-Service Level 1-Line Splitting-Zone 1 | | 1 | UEPSR UEPSB | UEABS | 12.90 | 36.54 | 16.87 | 0.00 | 0.00 | | | | | | |
| | | 2 Wire Analog Voice Grade Loop- Service Level 1-Line Splitting-Zone 2 | | 2 | UEPSR UEPSB | UEALS | 23.33 | 36.54 | 16.87 | 0.00 | 0.00 | | | | | | |
| | | 2 Wire Analog Voice Grade Loop- Service Level 1-Line Splitting-Zone 2 | | 2 | UEPSR UEPSB | UEABS | 23.33 | 36.54 | 16.87 | 0.00 | 0.00 | | | | | | |
| | | 2 Wire Analog Voice Grade Loop-Service Level 1-Line Splitting-Zone 3 | | 3 | UEPSR UEPSB | UEALS | 48.43 | 36.54 | 16.87 | 0.00 | 0.00 | | | | | | |
| | | 2 Wire Analog Voice Grade Loop-Service Level 1-Line Splitting-Zone 3 | | 3 | UEPSR UEPSB | UEABS | 48.43 | 36.54 | 16.87 | 0.00 | 0.00 | | | | | | |
| UNBUNDLED EXCHANGE ACCESS LOOP | | | | | | | | | | | | | | | | | |
| | 2-WIRE ANALOG VOICE GRADE LOOP | | | | | | | | | | | | | | | | |
| | | 2-Wire Analog Voice Grade Loop - Service Level 2 w/Loop or Ground Start Signaling - Zone 1 | | 1 | UEA | UEAL2 | 14.93 | 102.10 | 65.72 | | | | | | | | |
| | | 2-Wire Analog Voice Grade Loop - Service Level 2 w/Loop or Ground Start Signaling - Zone 2 | | 2 | UEA | UEAL2 | 25.35 | 102.10 | 65.72 | | | | | | | | |
| | | 2-Wire Analog Voice Grade Loop - Service Level 2 w/Loop or Ground Start Signaling - Zone 3 | | 3 | UEA | UEAL2 | 50.46 | 102.10 | 65.72 | | | | | | | | |
| | | Order Coordination for Specified Conversion Time (per LSR) | | | UEA | OCOSL | | 17.56 | | | | | | | | | |
| | | 2-Wire Analog Voice Grade Loop - Service Level 2 w/Reverse Battery Signaling - Zone 1 | | 1 | UEA | UEAR2 | 14.93 | 102.10 | 65.72 | | | | | | | | |
| | | 2-Wire Analog Voice Grade Loop - Service Level 2 w/Reverse Battery Signaling - Zone 2 | | 2 | UEA | UEAR2 | 25.35 | 102.10 | 65.72 | | | | | | | | |
| | | 2-Wire Analog Voice Grade Loop - Service Level 2 w/Reverse Battery Signaling - Zone 3 | | 3 | UEA | UEAR2 | 50.46 | 102.10 | 65.72 | | | | | | | | |
| | | Order Coordination for Specified Conversion Time (per LSR) | | | UEA | OCOSL | | 17.56 | | | | | | | | | |
| | | CLEC to CLEC Conversion Charge without outside dispatch | | | UEA | UREWO | | 87.59 | 36.30 | | | | | | | | |
| | | Loop Tagging - Service Level 2 (SL2) | | | UEA | URETL | | 11.20 | 1.10 | | | | | | | | |
| | 4-WIRE ANALOG VOICE GRADE LOOP | | | | | | | | | | | | | | | | |
| | | 4-Wire Analog Voice Grade Loop - Zone 1 | | 1 | UEA | UEAL4 | 30.81 | 127.40 | 91.02 | | | | | | | | |
| | | 4-Wire Analog Voice Grade Loop - Zone 2 | | 2 | UEA | UEAL4 | 38.32 | 127.40 | 91.02 | | | | | | | | |
| | | 4-Wire Analog Voice Grade Loop - Zone 3 | | 3 | UEA | UEAL4 | 60.39 | 127.40 | 91.02 | | | | | | | | |
| | | Order Coordination for Specified Conversion Time (per LSR) | | | UEA | OCOSL | | 17.56 | | | | | | | | | |
| | | CLEC to CLEC Conversion Charge without outside dispatch | | | UEA | UREWO | | 87.59 | 36.30 | | | | | | | | |

| UNBUNDLED NETWORK ELEMENTS - Louisiana | | | | | | | | | | | | | Attachment: 2 | | Exhibit: A | |
|---|---|---|---|---|---|---|---|---|---|---|---|---|---|---|---|---|
| CATEGORY | RATE ELEMENTS | Interim | Zone | BCS | USOC | RATES ($) | | | | | Svc Order Submitted Elec per LSR | Svc Order Submitted Manually per LSR | Incremental Charge - Manual Svc Order vs. Electronic-1st | Incremental Charge - Manual Svc Order vs. Electronic-Add'l | Incremental Charge - Manual Svc Order vs. Electronic-Disc 1st | Incremental Charge - Manual Svc Order vs. Electronic-Disc Add'l |
| | | | | | | Rec | Nonrecurring | | Nonrecurring Disconnect | | OSS Rates ($) | | | | | |
| | | | | | | | First | Add'l | First | Add'l | SOMEC | SOMAN | SOMAN | SOMAN | SOMAN | SOMAN |
| | 2-WIRE ISDN DIGITAL GRADE LOOP | | | | | | | | | | | | | | | |
| | 2-Wire ISDN Digital Grade Loop - Zone 1 | | 1 | UDN | U1L2X | 22.09 | 113.34 | 76.96 | | | | | | | | |
| | 2-Wire ISDN Digital Grade Loop - Zone 2 | | 2 | UDN | U1L2X | 35.28 | 113.34 | 76.96 | | | | | | | | |
| | 2-Wire ISDN Digital Grade Loop - Zone 3 | | 3 | UDN | U1L2X | 65.18 | 113.34 | 76.96 | | | | | | | | |
| | Order Coordination For Specified Conversion Time (per LSR) | | | UDN | OCOSL | | 17.56 | | | | | | | | | |
| | CLEC to CLEC Conversion Charge without outside dispatch | | | UDN | UREWO | | 91.49 | 44.09 | | | | | | | | |
| | 2-WIRE ASYMMETRICAL DIGITAL SUBSCRIBER LINE (ADSL) COMPATIBLE LOOP | | | | | | | | | | | | | | | |
| | 2 Wire Unbundled ADSL Loop including manual service inquiry & facility reservation - Zone 1 | | 1 | UAL | UAL2X | 12.29 | 117.08 | 68.36 | | | | | | | | |
| | 2 Wire Unbundled ADSL Loop including manual service inquiry & facility reservation - Zone 2 | | 2 | UAL | UAL2X | 14.09 | 117.08 | 68.36 | | | | | | | | |
| | 2 Wire Unbundled ADSL Loop including manual service inquiry & facility reservation - Zone 3 | | 3 | UAL | UAL2X | 15.75 | 117.08 | 68.36 | | | | | | | | |
| | Order Coordination for Specified Conversion Time (per LSR) | | | UAL | OCOSL | | 17.56 | | | | | | | | | |
| | 2 Wire Unbundled ADSL Loop without manual service inquiry & facility reservaton - Zone 1 | | 1 | UAL | UAL2W | 12.29 | 92.83 | 56.02 | | | | | | | | |
| | 2 Wire Unbundled ADSL Loop without manual service inquiry & facility reservaton - Zone 2 | | 2 | UAL | UAL2W | 14.09 | 92.83 | 56.02 | | | | | | | | |
| | 2 Wire Unbundled ADSL Loop without manual service inquiry & facility reservaton - Zone 3 | | 3 | UAL | UAL2W | 15.75 | 92.83 | 56.02 | | | | | | | | |
| | Order Coordination for Specified Conversion Time (per LSR) | | | UAL | OCOSL | | 17.56 | | | | | | | | | |
| | CLEC to CLEC Conversion Charge without outside dispatch | | | UAL | UREWO | | 86.07 | 40.34 | | | | | | | | |
| | 2-WIRE HIGH BIT RATE DIGITAL SUBSCRIBER LINE (HDSL) COMPATIBLE LOOP | | | | | | | | | | | | | | | |
| | 2 Wire Unbundled HDSL Loop including manual service inquiry & facility reservation - Zone 1 | | 1 | UHL | UHL2X | 9.79 | 125.50 | 76.77 | | | | | | | | |
| | 2 Wire Unbundled HDSL Loop including manual service inquiry & facility reservation - Zone 2 | | 2 | UHL | UHL2X | 11.52 | 125.50 | 76.77 | | | | | | | | |
| | 2 Wire Unbundled HDSL Loop including manual service inquiry & facility reservation - Zone 3 | | 3 | UHL | UHL2X | 12.74 | 125.50 | 76.77 | | | | | | | | |
| | Order Coordination for Specified Conversion Time (per LSR) | | | UHL | OCOSL | | 17.56 | | | | | | | | | |
| | 2 Wire Unbundled HDSL Loop without manual service inquiry and facility reservation - Zone 1 | | 1 | UHL | UHL2W | 9.79 | 101.24 | 64.43 | | | | | | | | |
| | 2 Wire Unbundled HDSL Loop without manual service inquiry and facility reservation - Zone 2 | | 2 | UHL | UHL2W | 11.52 | 101.24 | 64.43 | | | | | | | | |
| | 2 Wire Unbundled HDSL Loop without manual service inquiry and facility reservation - Zone 3 | | 3 | UHL | UHL2W | 12.74 | 101.24 | 64.43 | | | | | | | | |
| | Order Coordination for Specified Conversion Time (per LSR) | | | UHL | OCOSL | | 17.56 | | | | | | | | | |
| | CLEC to CLEC Conversion Charge without outside dispatch | | | UHL | UREWO | | 86.00 | 40.34 | | | | | | | | |
| | 4-WIRE HIGH BIT RATE DIGITAL SUBSCRIBER LINE (HDSL) COMPATIBLE LOOP | | | | | | | | | | | | | | | |
| | 4 Wire Unbundled HDSL Loop including manual service inquiry and facility reservation - Zone 1 | | 1 | UHL | UHL4X | 16.24 | 153.26 | 104.54 | | | | | | | | |
| | 4-Wire Unbundled HDSL Loop including manual service inquiry and facility reservation - Zone 2 | | 2 | UHL | UHL4X | 16.65 | 153.26 | 104.54 | | | | | | | | |
| | 4-Wire Unbundled HDSL Loop including manual service inquiry and facility reservation - Zone 3 | | 3 | UHL | UHL4X | 17.34 | 153.26 | 104.54 | | | | | | | | |
| | Order Coordination for Specified Conversion Time (per LSR) | | | UHL | OCOSL | | 17.56 | | | | | | | | | |
| | 4-Wire Unbundled HDSL Loop without manual service inquiry and facility reservation - Zone 1 | | 1 | UHL | UHL4W | 16.24 | 129.00 | 92.20 | | | | | | | | |
| | 4-Wire Unbundled HDSL Loop without manual service inquiry and facility reservation - Zone 2 | | 2 | UHL | UHL4W | 16.65 | 129.00 | 92.20 | | | | | | | | |
| | 4-Wire Unbundled HDSL Loop without manual service inquiry and facility reservation - Zone 3 | | 3 | UHL | UHL4W | 17.34 | 129.00 | 92.20 | | | | | | | | |
| | Order Coordination for Specified Conversion Time (per LSR) | | | UHL | OCOSL | | 17.56 | | | | | | | | | |
| | CLEC to CLEC Conversion Charge without outside dispatch | | | UHL | UREWO | | 86.00 | 40.34 | | | | | | | | |
| | 4-WIRE DS1 DIGITAL LOOP | | | | | | | | | | | | | | | |
| | 4-Wire DS1 Digital Loop - Zone 1 | | 1 | USL | USLXX | 85.70 | 245.16 | 152.98 | | | | | | | | |
| | 4-Wire DS1 Digital Loop - Zone 2 | | 2 | USL | USLXX | 194.96 | 245.16 | 152.98 | | | | | | | | |
| | 4-Wire DS1 Digital Loop - Zone 3 | | 3 | USL | USLXX | 491.94 | 245.16 | 152.98 | | | | | | | | |
| | Order Coordination for Specified Conversion Time (per LSR) | | | USL | OCOSL | | 17.56 | | | | | | | | | |

| UNBUNDLED NETWORK ELEMENTS - Louisiana | | | | | | | | | | | | | | Attachment: 2 | | Exhibit: A | |
|---|---|---|---|---|---|---|---|---|---|---|---|---|---|---|---|---|---|
| CATEGORY | | RATE ELEMENTS | Interim | Zone | BCS | USOC | RATES ($) | | | | | Svc Order Submitted Elec per LSR | Svc Order Submitted Manually per LSR | Incremental Charge - Manual Svc Order vs. Electronic-1st | Incremental Charge - Manual Svc Order vs. Electronic-Add'l | Incremental Charge - Manual Svc Order vs. Electronic-Disc 1st | Incremental Charge - Manual Svc Order vs. Electronic-Disc Add'l |
| | | | | | | | Rec | Nonrecurring | | Nonrecurring Disconnect | | OSS Rates ($) | | | | | |
| | | | | | | | | First | Add'l | First | Add'l | SOMEC | SOMAN | SOMAN | SOMAN | SOMAN | SOMAN |
| | | CLEC to CLEC Conversion Charge without outside dispatch | | | USL | UREWO | | 100.93 | 42.98 | | | | | | | | |
| | 4-WIRE 19.2, 56 OR 64 KBPS DIGITAL GRADE LOOP | | | | | | | | | | | | | | | | |
| | | 4 Wire Unbundled Digital 19.2 Kbps | | 1 | UDL | UDL19 | 30.99 | 121.86 | 85.48 | | | | | | | | |
| | | 4 Wire Unbundled Digital 19.2 Kbps | | 2 | UDL | UDL19 | 36.78 | 121.86 | 85.48 | | | | | | | | |
| | | 4 Wire Unbundled Digital 19.2 Kbps | | 3 | UDL | UDL19 | 38.92 | 121.86 | 85.48 | | | | | | | | |
| | | 4 Wire Unbundled Digital Loop 56 Kbps - Zone 1 | | 1 | UDL | UDL56 | 30.99 | 121.86 | 85.48 | | | | | | | | |
| | | 4 Wire Unbundled Digital Loop 56 Kbps - Zone 2 | | 2 | UDL | UDL56 | 36.78 | 121.86 | 85.48 | | | | | | | | |
| | | 4 Wire Unbundled Digital Loop 56 Kbps - Zone 3 | | 3 | UDL | UDL56 | 38.92 | 121.86 | 85.48 | | | | | | | | |
| | | Order Coordination for Specified Conversion Time (per LSR) | | | UDL | OCOSL | | 17.56 | | | | | | | | | |
| | | 4 Wire Unbundled Digital Loop 64 Kbps - Zone 1 | | 1 | UDL | UDL64 | 30.99 | 121.86 | 85.48 | | | | | | | | |
| | | 4 Wire Unbundled Digital Loop 64 Kbps - Zone 2 | | 2 | UDL | UDL64 | 36.78 | 121.86 | 85.48 | | | | | | | | |
| | | 4 Wire Unbundled Digital Loop 64 Kbps - Zone 3 | | 3 | UDL | UDL64 | 38.92 | 121.86 | 85.48 | | | | | | | | |
| | | Order Coordination for Specified Conversion Time (per LSR) | | | UDL | OCOSL | | 17.56 | | | | | | | | | |
| | | CLEC to CLEC Conversion Charge without outside dispatch | | | UDL | UREWO | | 101.97 | 49.67 | | | | | | | | |
| | 2-WIRE Unbundled COPPER LOOP | | | | | | | | | | | | | | | | |
| | | 2-Wire Unbundled Copper Loop-Designed including manual service inquiry & facility reservation - Zone 1 | | 1 | UCL | UCLPB | 12.29 | 116.18 | 67.46 | | | | | | | | |
| | | 2-Wire Unbundled Copper Loop-Designed including manual service inquiry & facility reservation - Zone 2 | | 2 | UCL | UCLPB | 14.09 | 116.18 | 67.46 | | | | | | | | |
| | | 2 Wire Unbundled Copper Loop-Designed including manual service inquiry & facility reservation - Zone 3 | | 3 | UCL | UCLPB | 15.75 | 116.18 | 67.46 | | | | | | | | |
| | | Order Coordination for Unbundled Copper Loops (per loop) | | | UCL | UCLMC | | 7.92 | 7.92 | | | | | | | | |
| | | 2-Wire Unbundled Copper Loop-Designed without manual service inquiry and facility reservation - Zone 1 | | 1 | UCL | UCLPW | 12.29 | 91.92 | 55.12 | | | | | | | | |
| | | 2-Wire Unbundled Copper Loop-Designed without manual service inquiry and facility reservation - Zone 2 | | 2 | UCL | UCLPW | 14.09 | 91.92 | 55.12 | | | | | | | | |
| | | 2-Wire Unbundled Copper Loop-Designed without manual service inquiry and facility reservation - Zone 3 | | 3 | UCL | UCLPW | 15.75 | 91.92 | 55.12 | | | | | | | | |
| | | Order Coordination for Unbundled Copper Loops (per loop) | | | UCL | UCLMC | | 7.92 | 7.92 | | | | | | | | |
| | | CLEC to CLEC Conversion Charge without outside dispatch (UCL-Des) | | | UCL | UREWO | | 91.92 | 42.47 | | | | | | | | |
| | 4-WIRE COPPER LOOP | | | | | | | | | | | | | | | | |
| | | 4-Wire Copper Loop-Designed including manual service inquiry and facility reservation - Zone 1 | | 1 | UCL | UCL4S | 22.27 | 139.69 | 90.96 | | | | | | | | |
| | | 4-Wire Copper Loop-Designed including manual service inquiry and facility reservation - Zone 2 | | 2 | UCL | UCL4S | 18.95 | 139.69 | 90.96 | | | | | | | | |
| | | 4-Wire Copper Loop-Designed including manual service inquiry and facility reservation - Zone 3 | | 3 | UCL | UCL4S | 10.99 | 139.69 | 90.96 | | | | | | | | |
| | | Order Coordination for Unbundled Copper Loops (per loop) | | | UCL | UCLMC | | 7.92 | 7.92 | | | | | | | | |
| | | 4-Wire Copper Loop-Designed without manual service inquiry and facility reservation - Zone 1 | | 1 | UCL | UCL4W | 22.27 | 115.43 | 78.63 | | | | | | | | |
| | | 4-Wire Copper Loop-Designed without manual service inquiry and facility reservation - Zone 2 | | 2 | UCL | UCL4W | 18.95 | 115.43 | 78.63 | | | | | | | | |
| | | 4-Wire Copper Loop-Designed without manual service inquiry and facility reservation - Zone 3 | | 3 | UCL | UCL4W | 10.99 | 115.43 | 78.63 | | | | | | | | |
| | | Order Coordination for Unbundled Copper Loops (per loop) | | | UCL | UCLMC | | 7.92 | 7.92 | | | | | | | | |
| | | CLEC to CLEC Conversion Charge without outside dispatch (UCL-Des) | | | UCL | UREWO | | 91.92 | 42.47 | | | | | | | | |
| LOOP MODIFICATION | | | | | | | | | | | | | | | | | |
| | | Unbundled Loop Modification, Removal of Load Coils - 2 Wire pair less than or equal to 18k ft, per Unbundled Loop | | | UAL, UHL, UCL, UEQ, ULS, UEA, UEANL, UEPSR, UEPSB | ULM2L | | 0.00 | 0.00 | | | | | | | | |
| | | Unbundled Loop Modification Removal of Load Coils - 4 Wire less than or equal to 18K ft, per Unbundled Loop | | | UHL, UCL, UEA | ULM4L | | 0.00 | 0.00 | | | | | | | | |
| | | Unbundled Loop Modification Removal of Bridged Tap Removal, per unbundled loop | | | UAL, UHL, UCL, UEQ, ULS, UEA, UEANL, UEPSR, UEPSB | ULMBT | | 12.15 | 12.15 | | | | | | | | |

| UNBUNDLED NETWORK ELEMENTS - Louisiana | | | | | | | | | | | | | Attachment: 2 | | Exhibit: A | |
|---|---|---|---|---|---|---|---|---|---|---|---|---|---|---|---|---|
| CATEGORY | RATE ELEMENTS | Interim | Zone | BCS | USOC | RATES ($) | | | | | Svc Order Submitted Elec per LSR | Svc Order Submitted Manually per LSR | Incremental Charge - Manual Svc Order vs. Electronic-1st | Incremental Charge - Manual Svc Order vs. Electronic-Add'l | Incremental Charge - Manual Svc Order vs. Electronic-Disc 1st | Incremental Charge - Manual Svc Order vs. Electronic-Disc Add'l |
| | | | | | | Rec | Nonrecurring | | Nonrecurring Disconnect | | OSS Rates ($) | | | | | |
| | | | | | | | First | Add'l | First | Add'l | SOMEC | SOMAN | SOMAN | SOMAN | SOMAN | SOMAN |
| SUB-LOOPS | | | | | | | | | | | | | | | | |
| | Sub-Loop Distribution | | | | | | | | | | | | | | | |
| | Sub-Loop - Per Cross Box Location - CLEC Feeder Facility Set-Up | I | | UEANL | USBSA | | 144.09 | 144.09 | | | | | | | | |
| | Sub-Loop - Per Cross Box Location - Per 25 Pair Panel Set-Up | I | | UEANL | USBSB | | 10.99 | 10.99 | | | | | | | | |
| | Sub-Loop - Per Building Equipment Room - CLEC Feeder Facility Set-Up | I | | UEANL | USBSC | | 86.16 | 86.16 | | | | | | | | |
| | Sub-Loop - Per Building Equipment Room - Per 25 Pair Panel Set-Up | I | | UEANL | USBSD | | 27.13 | 27.13 | | | | | | | | |
| | Sub-Loop Distribution Per 2-Wire Analog Voice Grade Loop - Zone 1 | I | 1 | UEANL | USBN2 | 7.57 | 63.89 | 30.06 | | | | | | | | |
| | Sub-Loop Distribution Per 2-Wire Analog Voice Grade Loop - Zone 2 | I | 2 | UEANL | USBN2 | 12.75 | 63.89 | 30.06 | | | | | | | | |
| | Sub-Loop Distribution Per 2-Wire Analog Voice Grade Loop - Zone 3 | I | 3 | UEANL | USBN2 | 21.45 | 63.89 | 30.06 | | | | | | | | |
| | Order Coordination for Unbundled Sub-Loops, per sub-loop pair | | | UEANL | USBMC | | 7.92 | 7.92 | | | | | | | | |
| | Sub-Loop Distribution Per 4-Wire Analog Voice Grade Loop - Zone 1 | | 1 | UEANL | USBN4 | 11.76 | 76.75 | 42.92 | | | | | | | | |
| | Sub-Loop Distribution Per 4-Wire Analog Voice Grade Loop - Zone 2 | | 2 | UEANL | USBN4 | 16.84 | 76.75 | 42.92 | | | | | | | | |
| | Sub-Loop Distribution Per 4-Wire Analog Voice Grade Loop - Zone 3 | | 3 | UEANL | USBN4 | 19.27 | 76.75 | 42.92 | | | | | | | | |
| | Order Coordination for Unbundled Sub-Loops, per sub-loop pair | | | UEANL | USBMC | | 7.92 | 7.92 | | | | | | | | |
| | Sub-Loop 2-Wire Intrabuilding Network Cable (INC) | I | | UEANL | USBR2 | 2.91 | 51.48 | 17.65 | | | | | | | | |
| | Order Coordination for Unbundled Sub-Loops, per sub-loop pair | | | UEANL | USBMC | | 7.92 | 7.92 | | | | | | | | |
| | Sub-Loop 4-Wire Intrabuilding Network Cable (INC) | I | | UEANL | USBR4 | 6.58 | 57.54 | 23.71 | | | | | | | | |
| | Order Coordination for Unbundled Sub-Loops, per sub-loop pair | | | UEANL | USBMC | | 7.92 | 7.92 | | | | | | | | |
| | Loop Testing - Basic 1st Half Hour | | | UEANL | URET1 | | 33.17 | 33.17 | | | | | | | | |
| | Loop Testing - Basic Additional Half Hour | | | UEANL | URETA | | 19.28 | 19.28 | | | | | | | | |
| | 2 Wire Copper Unbundled Sub-Loop Distribution - Zone 1 | I | 1 | UEF | UCS2X | 6.26 | 63.89 | 30.06 | | | | | | | | |
| | 2 Wire Copper Unbundled Sub-Loop Distribution - Zone 2 | I | 2 | UEF | UCS2X | 10.07 | 63.89 | 30.06 | | | | | | | | |
| | 2 Wire Copper Unbundled Sub-Loop Distribution - Zone 3 | I | 3 | UEF | UCS2X | 12.70 | 63.89 | 30.06 | | | | | | | | |
| | Order Coordination for Unbundled Sub-Loops, per sub-loop pair | | | UEF | USBMC | | 7.92 | 7.92 | | | | | | | | |
| | 4 Wire Copper Unbundled Sub-Loop Distribution - Zone 1 | I | 1 | UEF | UCS4X | 8.03 | 76.75 | 42.92 | | | | | | | | |
| | 4 Wire Copper Unbundled Sub-Loop Distribution - Zone 2 | I | 2 | UEF | UCS4X | 10.71 | 76.75 | 42.92 | | | | | | | | |
| | 4 Wire Copper Unbundled Sub-Loop Distribution - Zone 3 | I | 3 | UEF | UCS4X | 6.08 | 76.75 | 42.92 | | | | | | | | |
| | Order Coordination for Unbundled Sub-Loops, per sub-loop pair | | | UEF | USBMC | | 7.92 | 7.92 | | | | | | | | |
| | Loop Testing - Basic 1st Half Hour | | | UEF | URET1 | | 33.17 | 33.17 | | | | | | | | |
| | Loop Testing - Basic Additional Half Hour | | | UEF | URETA | | 19.28 | 19.28 | | | | | | | | |
| | Unbundled Network Terminating Wire (UNTW) | | | | | | | | | | | | | | | |
| | Unbundled Network Terminating Wire (UNTW) per Pair | | | UENTW | UENPP | 0.3454 | 14.72 | 14.72 | | | | | | | | |
| | Network Interface Device (NID) | | | | | | | | | | | | | | | |
| | Network Interface Device (NID) - 1-2 lines | | | UENTW | UND12 | | 42.26 | 27.83 | | | | | | | | |
| | Network Interface Device (NID) - 1-6 lines | | | UENTW | UND16 | | 62.86 | 48.43 | | | | | | | | |
| | Network Interface Device Cross Connect - 2 W | | | UENTW | UNDC2 | | 5.73 | 5.73 | | | | | | | | |
| | Network Interface Device Cross Connect - 4W | | | UENTW | UNDC4 | | 5.73 | 5.73 | | | | | | | | |
| UNE OTHER, PROVISIONING ONLY - NO RATE | | | | | | | | | | | | | | | | |
| | NID - Dispatch and Service Order for NID installation | | | UENTW | UNDBX | 0.00 | 0.00 | | | | | | | | | |
| | UNTW Circuit Id Establishment, Provisioning Only - No Rate | | | UENTW | UENCE | 0.00 | 0.00 | | | | | | | | | |
| | Unbundled Contract Name, Provisioning Only - No Rate | | | UEANL,UEF,UEQ,UENTW | UNECN | 0.00 | 0.00 | | | | | | | | | |
| UNE OTHER, PROVISIONING ONLY - NO RATE | | | | | | | | | | | | | | | | |

## UNBUNDLED NETWORK ELEMENTS - Louisiana

| CATEGORY | RATE ELEMENTS | Interl m | Zone | BCS | USOC | RATES ($) | | | | | Svc Order Submitted Elec per LSR | Svc Order Submitted Manually per LSR | Attachment: 2 Incremental Charge - Manual Svc Order vs. Electronic- 1st | Attachment: 2 Incremental Charge - Manual Svc Order vs. Electronic- Add'l | Exhibit: A Incremental Charge - Manual Svc Order vs. Electronic- Disc 1st | Exhibit: A Incremental Charge - Manual Svc Order vs. Electronic- Disc Add'l |
|---|---|---|---|---|---|---|---|---|---|---|---|---|---|---|---|---|
| | | | | | | Rec | Nonrecurring | | Nonrecurring Disconnect | | OSS Rates ($) | | | | | |
| | | | | | | | First | Add'l | First | Add'l | SOMEC | SOMAN | SOMAN | SOMAN | SOMAN | SOMAN |
| | Unbundled Contact Name, Provisioning Only - no rate | | | UAL,UCL,UDC,UDL, UDN,UEA,UHL,ULC | UNECN | 0.00 | 0.00 | | | | | | | | | |
| | Unbundled Sub-Loop Feeder-2 Wire Cross Box Jumper - no rate | | | UEA,UDN,UCL,UDC | USBFQ | 0.00 | 0.00 | | | | | | | | | |
| | Unbundled Sub-Loop Feeder-4 Wire Cross Box Jumper - no rate | | | UEA,USL,UCL,UDL | USBFR | 0.00 | 0.00 | | | | | | | | | |
| | Unbundled DS1 Loop - Superframe Format Option - no rate | | | USL | CCOSF | 0.00 | 0.00 | | | | | | | | | |
| | Unbundled DS1 Loop - Expanded Superframe Format option - no rate | | | USL | CCOEF | 0.00 | 0.00 | | | | | | | | | |
| **HIGH CAPACITY UNBUNDLED LOCAL LOOP** | | | | | | | | | | | | | | | | |
| | High Capacity Unbundled Local Loop - DS3 - Per Mile per month | | | UE3 | 1L5ND | 10.04 | | | | | | | | | | |
| | High Capacity Unbundled Local Loop - DS3 - Facility Termination per month | | | UE3 | UE3PX | 362.34 | 438.46 | 256.30 | | | | | | | | |
| | High Capacity Unbundled Local Loop - STS-1 - Per Mile per month | | | UDLSX | 1L5ND | 10.04 | | | | | | | | | | |
| | High Capacity Unbundled Local Loop - STS-1 - Facility Termination per month | | | UDLSX | UDLS1 | 374.56 | 438.46 | 256.30 | | | | | | | | |
| **LOOP MAKE-UP** | | | | | | | | | | | | | | | | |
| | Loop Makeup - Preordering Without Reservation, per working or spare facility queried (Manual). | | | UMK | UMKLW | | 23.29 | 23.29 | | | | | | | | |
| | Loop Makeup - Preordering With Reservation, per spare facility queried (Manual). | | | UMK | UMKLP | | 24.70 | 24.70 | | | | | | | | |
| | Loop Makeup--With or Without Reservation, per working or spare facility queried (Mechanized) | | | UMK | UMKMQ | | 0.19 | 0.19 | | | | | | | | |
| **LINE SHARING AND LINE SPLITTING** | | | | | | | | | | | | | | | | |
| **NOTE 1: The Line Sharing monthly recurring rates for all installations completed from October 02, 2003 through midnight October 01, 2004 shall be billed as follows:** | | | | | | | | | | | | | | | | |
| **NOTE 1: 10/02/2003 – 10/01/2004: 25% of the rate for an unbundled copper loop non-designed ("UCLND")** | | | | | | | | | | | | | | | | |
| **NOTE 1: 10/02/2004 – 10/01/2005: 50% of the rate for UCLND** | | | | | | | | | | | | | | | | |
| **NOTE 1: 10/02/2005 – 10/01/2006: 75% of the rate for UCLND** | | | | | | | | | | | | | | | | |
| **NOTE 1: Above will apply to USOCS: ULSDT and ULSCT** | | | | | | | | | | | | | | | | |
| ****NOTE 2: The Line Sharing monthly recurring rates with USOCs ULSDC and ULSCC applies only to circuits installed and inservice on or before October 1, 2003** | | | | | | | | | | | | | | | | |
| **LINE SHARING** | | | | | | | | | | | | | | | | |
| **SPLITTERS-CENTRAL OFFICE BASED** | | | | | | | | | | | | | | | | |
| | Line Sharing Splitter, per System 96 Line Capacity | | | ULS | ULSDA | 187.17 | 183.33 | 0.00 | | | | | | | | |
| | Line Sharing Splitter, per System 24 Line Capacity | | | ULS | ULSDB | 46.79 | 183.33 | 0.00 | | | | | | | | |
| | Line Sharing Splitter, Per System, 8 Line Capacity | | | ULS | ULSD8 | 15.59 | 183.33 | 0.00 | | | | | | | | |
| | Line Sharing-DLEC Owned Splitter in CO-CFA activaton-deactivation (per LSOD) | | | ULS | ULSDG | | 83.98 | 0.00 | | | | | | | | |
| **END USER ORDERING-CENTRAL OFFICE BASED LINE SHARING** | | | | | | | | | | | | | | | | |
| | Line Sharing - per Line Activation (BST Owned splitter) - OBSOLETE see **NOTE 2 | | | ULS | ULSDC | 0.61 | 17.97 | 10.29 | | | | | | | | |
| | Line Share Service, TRO per line activation, BST owned splitter - Central Office Located (25% of UCLND) - please see NOTE 1 (E:10/2/2003) | | | ULS | ULSDT | 3.10 | 17.97 | 10.29 | | | | | | | | |
| | Line Share Service, TRO per line activation, BST owned splitter - Central Office Located (50% of UCLND) - please see NOTE 1 (E:10/2/2004) | | | ULS | ULSDT | 6.20 | 17.97 | 10.29 | | | | | | | | |
| | Line Share Service, TRO per line activation, BST owned splitter - Central Office Located (75% of UCLND) - please see NOTE 1 (E:10/2/2005) | | | ULS | ULSDT | 9.30 | 17.97 | 10.29 | | | | | | | | |
| | Line Sharing - per Subsequent Activity per Line Rearrangement(BST Owned Splitter) | | | ULS | ULSDS | | 15.91 | 7.95 | | | | | | | | |
| | Line Sharing - per Subsequent Activity per Line Rearrangement(DLEC Owned Splitter) | | | ULS | ULSCS | | 15.91 | 7.95 | | | | | | | | |
| | Line Sharing - per Line Activation (DLEC owned Splitter) - OBSOLETE see **NOTE 2 | | | ULS | ULSCC | 0.61 | 47.44 | 19.31 | | | | | | | | |

| UNBUNDLED NETWORK ELEMENTS - Louisiana | | | | | | | | | | | | | | Attachment: 2 | | Exhibit: A | |
|---|---|---|---|---|---|---|---|---|---|---|---|---|---|---|---|---|---|
| CATEGORY | | RATE ELEMENTS | Interim | Zone | BCS | USOC | RATES ($) | | | | | Svc Order Submitted Elec per LSR | Svc Order Submitted Manually per LSR | Incremental Charge - Manual Svc Order vs. Electronic-1st | Incremental Charge - Manual Svc Order vs. Electronic-Add'l | Incremental Charge - Manual Svc Order vs. Electronic-Disc 1st | Incremental Charge - Manual Svc Order vs. Electronic-Disc Add'l |
| | | | | | | | Rec | Nonrecurring | | Nonrecurring Disconnect | | OSS Rates ($) | | | | | |
| | | | | | | | | First | Add'l | First | Add'l | SOMEC | SOMAN | SOMAN | SOMAN | SOMAN | SOMAN |
| | | Line Share Service, TRO per line activation, CLEC owned splitter - Central Office Located (25% of UCLND) - please see NOTE 1 (E:10/2/2003) | | | ULS | ULSCT | 3.10 | 47.44 | 19.31 | | | | | | | | |
| | | Line Share Service, TRO per line activation, CLEC owned splitter - Central Office Located (50% of UCLND) - please see NOTE 1 (E:10/2/2004) | | | ULS | ULSCT | 6.20 | 47.44 | 19.31 | | | | | | | | |
| | | Line Share Service, TRO per line activation, CLEC owned splitter - Central Office Located (75% of UCLND) - please see NOTE 1 (E:10/2/2005) | | | ULS | ULSCT | 9.30 | 47.44 | 19.31 | | | | | | | | |
| | LINE SPLITTING | | | | | | | | | | | | | | | | |
| | END USER ORDERING-CENTRAL OFFICE BASED | | | | | | | | | | | | | | | | |
| | | Line Splitting - per line activation DLEC owned splitter | | | UEPSR UEPSB | UREOS | 0.61 | | | | | | | | | | |
| | | Line Splitting - per line activation BST owned - physical | | | UEPSR UEPSB | UREBP | 0.61 | 17.97 | 10.29 | | | | | | | | |
| | | Line Splitting - per line activation BST owned - virtual | | | UEPSR UEPSB | UREBV | 0.61 | 17.97 | 10.29 | | | | | | | | |
| | MAINTENANCE | | | | | | | | | | | | | | | | |
| | | No Trouble Found - per 1/2 hour increments - Basic | | | | | | 80.00 | 55.00 | | | | | | | | |
| | | No Trouble Found - per 1/2 hour increments - Overtime | | | | | | 120.00 | 82.50 | | | | | | | | |
| | | No Trouble Found - per 1/2 hour increments - Premium | | | | | | 160.00 | 110.00 | | | | | | | | |
| UNBUNDLED DEDICATED TRANSPORT | | | | | | | | | | | | | | | | | |
| | INTEROFFICE CHANNEL - DEDICATED TRANSPORT | | | | | | | | | | | | | | | | |
| | | Interoffice Channel - Dedicated Transport - 2-Wire Voice Grade - Per Mile per month | | | U1TVX | 1L5XX | 0.013 | | | | | | | | | | |
| | | Interoffice Channel - Dedicated Transport- 2- Wire Voice Grade - Facility Termination | | | U1TVX | U1TV2 | 22.60 | 39.36 | 26.62 | | | | | | | | |
| | | Interoffice Channel - Dedicated Transpor t- 2-Wire Voice Grade Rev Bat. - Per Mile per month | | | U1TVX | 1L5XX | 0.013 | | | | | | | | | | |
| | | Interoffice Channel - Dedicated Transport- 2- Wire VG Rev Bat. - Facility Termination | | | U1TVX | U1TR2 | 22.60 | 39.36 | 26.62 | | | | | | | | |
| | | Interoffice Channel - Dedicated Transport - 4-Wire Voice Grade - Per Mile per month | | | U1TVX | 1L5XX | 0.013 | | | | | | | | | | |
| | | Interoffice Channel - Dedicated Transport - 4- Wire Voice Grade - Facility Termination | | | U1TVX | U1TV4 | 19.81 | 39.36 | 26.62 | | | | | | | | |
| | | Interoffice Channel - Dedicated Transport - 56 kbps - per mile per month | | | U1TDX | 1L5XX | 0.013 | | | | | | | | | | |
| | | Interoffice Channel - Dedicated Transport - 56 kbps - Facility Termination | | | U1TDX | U1TD5 | 15.61 | 39.37 | 26.62 | | | | | | | | |
| | | Interoffice Channel - Dedicated Transport - 64 kbps - per mile per month | | | U1TDX | 1L5XX | 0.013 | | | | | | | | | | |
| | | Interoffice Channel - Dedicated Transport - 64 kbps - Facility Termination | | | U1TDX | U1TD6 | 15.61 | 39.37 | 26.62 | | | | | | | | |
| | | Interoffice Channel - Dedicated Channel - DS1 - Per Mile per month | | | U1TD1 | 1L5XX | 0.2652 | | | | | | | | | | |
| | | Interoffice Channel - Dedicated Tranport - DS1 - Facility Termination | | | U1TD1 | U1TF1 | 70.47 | 86.69 | 79.44 | | | | | | | | |
| | | Interoffice Channel - Dedicated Transport - DS3 - Per Mile per month | | | U1TD3 | 1L5XX | 6.04 | | | | | | | | | | |
| | | Interoffice Channel - Dedicated Transport - DS3 - Facility Termination per month | | | U1TD3 | U1TF3 | 850.45 | 270.69 | 158.05 | | | | | | | | |
| | | Interoffice Channel - Dedicated Transport - STS-1 - Per Mile per month | | | U1TS1 | 1L5XX | 6.04 | | | | | | | | | | |
| | | Interoffice Channel - Dedicated Transport - STS-1 - Facility Termination | | | U1TS1 | U1TFS | 830.19 | 270.69 | 158.05 | | | | | | | | |
| DARK FIBER | | | | | | | | | | | | | | | | | |
| | | Dark Fiber, Four Fiber Strands, Per Route Mile or Fraction Thereof per month - Interoffice Channel | | | UDF, UDFCX | 1L5DF | 25.28 | | | | | | | | | | |
| | | NRC Dark Fiber - Interoffice Channel | | | UDF, UDFCX | UDF14 | | 620.60 | 133.88 | | | | | | | | |
| | | Dark Fiber, Four Fiber Strands, Per Route Mile or Fraction Thereof per month - Local Loop | | | UDF, UDFCX | 1L5DL | 52.23 | | | | | | | | | | |
| | | NRC Dark Fiber - Local Loop | | | UDF, UDFCX | UDFL4 | | 620.60 | 133.88 | | | | | | | | |

| UNBUNDLED NETWORK ELEMENTS - Louisiana | | | | | | | | | | | | | Attachment: 2 | | Exhibit: A | |
|---|---|---|---|---|---|---|---|---|---|---|---|---|---|---|---|---|
| CATEGORY | RATE ELEMENTS | Interim | Zone | BCS | USOC | RATES ($) | | | | | Svc Order Submitted Elec per LSR | Svc Order Submitted Manually per LSR | Incremental Charge - Manual Svc Order vs. Electronic-1st | Incremental Charge - Manual Svc Order vs. Electronic-Add'l | Incremental Charge - Manual Svc Order vs. Electronic-Disc 1st | Incremental Charge - Manual Svc Order vs. Electronic-Disc Add'l |
| | | | | | | Rec | Nonrecurring | | Nonrecurring Disconnect | | OSS Rates ($) | | | | | |
| | | | | | | | First | Add'l | First | Add'l | SOMEC | SOMAN | SOMAN | SOMAN | SOMAN | SOMAN |
| 8XX ACCESS TEN DIGIT SCREENING | | | | | | | | | | | | | | | | |
| | 8XX Access Ten Digit Screening, Per Call | | | OHD | | 0.0006387 | | | | | | | | | | |
| | 8XX Access Ten Digit Screening, Reservation Charge Per 8XX Number Reserved | | | OHD | N8R1X | | 2.51 | 0.43 | | | | | | | | |
| | 8XX Access Ten Digit Screening, Per 8XX No. Established W/O POTS Translations | | | OHD | | | 5.77 | 0.78 | | | | | | | | |
| | 8XX Access Ten Digit Screening, Per 8XX No. Established With POTS Translations | | | OHD | N8FTX | | 5.77 | 0.78 | | | | | | | | |
| | 8XX Access Ten Digit Screening, Customized Area of Service Per 8XX Number | | | OHD | N8FCX | | 2.51 | 1.26 | | | | | | | | |
| | 8XX Access Ten Digit Screening, Multiple InterLATA CXR Routing Per CXR Requested Per 8XX No. | | | OHD | N8FMX | | 2.93 | 1.68 | | | | | | | | |
| | 8XX Access Ten Digit Screening, Change Charge Per Request | | | OHD | N8FAX | | 2.93 | 0.43 | | | | | | | | |
| | 8XX Access Ten Digit Screening, Call Handling and Destination Features | | | OHD | N8FDX | | 2.51 | | | | | | | | | |
| | 8XX Access Ten Digit Screening, w/ 8XX No. Delivery, per query | | | OHD | | 0.0006387 | | | | | | | | | | |
| | 8XX Access Ten Digit Screening, w/ POTS No. Delivery, per query | | | OHD | | 0.0006387 | | | | | | | | | | |
| LINE INFORMATION DATA BASE ACCESS (LIDB) | | | | | | | | | | | | | | | | |
| | LIDB Common Transport Per Query | | | OQT | | 0.0000221 | | | | | | | | | | |
| | LIDB Validation Per Query | | | OQU | | 0.0135077 | | | | | | | | | | |
| | LIDB Originating Point Code Establishment or Change | | | OQT, OQU | NRBPX | | 33.33 | | | | | | | | | |
| SIGNALING (CCS7) | | | | | | | | | | | | | | | | |
| | CCS7 Signaling Termination, Per STP Port | | | UDB | PT8SX | 147.60 | | | | | | | | | | |
| | CCS7 Signaling Usage, Per TCAP Message | | | UDB | | 0.000064 | | | | | | | | | | |
| | CCS7 Signaling Connection, Per link (A link) | | | UDB | TPP++ | 15.77 | 34.50 | 34.50 | | | | | | | | |
| | CCS7 Signaling Connection, Per link (B link) (also known as D link) | | | UDB | TPP++ | 15.77 | 34.50 | 34.50 | | | | | | | | |
| | CCS7 Signaling Usage, Per ISUP Message | | | UDB | | 0.000016 | | | | | | | | | | |
| | CCS7 Signaling Usage Surrogate, per link per LATA | | | UDB | STU56 | 732.10 | | | | | | | | | | |
| | CCS7 Signaling Point Code, per Originating Point Code Establishment or Change, per STP affected | | | UDB | CCAPO | | 28.17 | 28.17 | | | | | | | | |
| | CCS7 Signaling Point Code, per Destination Point Code Establishment or Change, Per Stp Affected | | | UDB | CCAPD | | 28.17 | 28.17 | | | | | | | | |
| E911 SERVICE | | | | | | | | | | | | | | | | |
| | Local Channel - Dedicated - 2-wr Voice Grade - Zone 1 | | | | | 18.32 | 187.51 | 32.21 | | | | | | | | |
| | Local Channel - Dedicated - 2-wr Voice Grade - Zone 2 | | | | | 18.32 | 187.51 | 32.21 | | | | | | | | |
| | Local Channel - Dedicated - 2-wr Voice Grade - Zone 3 | | | | | 18.32 | 187.51 | 32.21 | | | | | | | | |
| | Interoffice Transport - Dedicated - 2-wr Voice Grade Per Mile | | | | | 0.013 | | | | | | | | | | |
| | Interoffice Transport - Dedicated - 2-wr Voice Grade Per Facility Termination | | | | | 22.60 | 39.36 | 26.62 | | | | | | | | |
| | Local Channel - Dedicated - DS1 - Zone 1 | | | | | 39.18 | 172.34 | 149.27 | | | | | | | | |
| | Local Channel - Dedicated - DS1 - Zone 2 | | | | | 121.58 | 172.34 | 149.27 | | | | | | | | |
| | Local Channel - Dedicated - DS1 - Zone 3 | | | | | 70.02 | 172.34 | 149.27 | | | | | | | | |
| | Interoffice Transport - Dedicated - DS1 Per Mile | | | | | 0.2652 | | | | | | | | | | |
| | Interoffice Transport - Dedicated - DS1 Per Facility Termination | | | | | 70.47 | 86.69 | 79.44 | | | | | | | | |
| CALLING NAME (CNAM) SERVICE | | | | | | | | | | | | | | | | |
| | CNAM For DB Owners - Service Establishment | | | OQV | | | 22.29 | | | | | | | | | |
| | CNAM For Non DB Owners - Service Establishment | | | OQV | | | 22.29 | | | | | | | | | |
| | CNAM For DB Owners - Service Provisioning With Point Code Establishment | | | OQV | | | 962.22 | 711.64 | | | | | | | | |
| | CNAM For Non DB Owners - Service Provisioning With Point Code Establishment | | | OQV | | | 332.43 | 238.05 | | | | | | | | |
| | CNAM for DB Owners, Per Query | | | OQV | | 0.0010217 | | | | | | | | | | |
| | CNAM for Non DB Owners, Per Query | | | OQV | | 0.0010217 | | | | | | | | | | |
| SELECTIVE ROUTING | | | | | | | | | | | | | | | | |

| UNBUNDLED NETWORK ELEMENTS - Louisiana | | | | | | | | | | | | | | Attachment: 2 | | Exhibit: A | |
|---|---|---|---|---|---|---|---|---|---|---|---|---|---|---|---|---|---|
| CATEGORY | RATE ELEMENTS | Interim | Zone | BCS | USOC | RATES ($) | | | | | Svc Order Submitted Elec per LSR | Svc Order Submitted Manually per LSR | Incremental Charge - Manual Svc Order vs. Electronic-1st | Incremental Charge - Manual Svc Order vs. Electronic-Add'l | Incremental Charge - Manual Svc Order vs. Electronic-Disc 1st | Incremental Charge - Manual Svc Order vs. Electronic-Disc Add'l |
| | | | | | | Rec | Nonrecurring | | Nonrecurring Disconnect | | OSS Rates ($) | | | | | |
| | | | | | | | First | Add'l | First | Add'l | SOMEC | SOMAN | SOMAN | SOMAN | SOMAN | SOMAN |
| | Selective Routing Per Unique Line Class Code Per Request Per Switch | | | | | | 82.25 | 82.25 | | | | | | | | |
| VIRTUAL COLLOCATION | | | | | | | | | | | | | | | | |
| | Virtual Collocation-2 Wire Cross Connects (Loop) for Line Splitting | | | UEPSR UEPSB | VE1LS | 0.0296 | 11.94 | 11.46 | 0.00 | 0.00 | | | | | | |
| PHYSICAL COLLOCATION | | | | | | | | | | | | | | | | |
| | Physical Collocation-2 Wire Cross Connects (Loop) for Line Splitting | | | UEPSR UEPSB | PE1LS | 0.0318 | 11.94 | 11.46 | 0.00 | 0.00 | | | | | | |
| AIN SELECTIVE CARRIER ROUTING | | | | | | | | | | | | | | | | |
| | Regional Service Establishment | | | UEBIB | SRCEC | | 100,209.33 | | | | | | | | | |
| | End Office Establishment | | | UEBIB | SRCEO | | 164.29 | 164.29 | | | | | | | | |
| | Query NRC, per query | | | UEBIB | | 0.0030293 | | | | | | | | | | |
| AIN - BELLSOUTH AIN SMS ACCESS SERVICE | | | | | | | | | | | | | | | | |
| | AIN SMS Access Service - Service Establishment, Per State, Initial Setup | | | A1N | CAMSE | | 38.30 | 38.30 | | | | | | | | |
| | AIN SMS Access Service - Port Connection - Dial/Shared Access | | | A1N | CAMDP | | 7.60 | 7.60 | | | | | | | | |
| | AIN SMS Access Service - Port Connection - ISDN Access | | | A1N | CAM1P | | 7.60 | 7.60 | | | | | | | | |
| | AIN SMS Access Service - User Identification Codes - Per User ID Code | | | A1N | CAMAU | | 33.99 | 33.99 | | | | | | | | |
| | AIN SMS Access Service - Security Card, Per User ID Code, Initial or Replacement | | | A1N | CAMRC | | 41.39 | 41.39 | | | | | | | | |
| | AIN SMS Access Service - Storage, Per Unit (100 Kilobytes) | | | | | 0.0022 | | | | | | | | | | |
| | AIN SMS Access Service - Session, Per Minute | | | | | 0.5795 | | | | | | | | | | |
| | AIN SMS Access Service - Company Performed Session, Per Minute | | | | | 0.8104 | | | | | | | | | | |
| AIN - BELLSOUTH AIN TOOLKIT SERVICE | | | | | | | | | | | | | | | | |
| | AIN Toolkit Service - Service Establishment Charge, Per State, Initial Setup | | | CAM | BAPSC | | 38.30 | 38.30 | | | | | | | | |
| | AIN Toolkit Service - Training Session, Per Customer | | | | BAPVX | | 4,175.10 | 4,175.10 | | | | | | | | |
| | AIN Toolkit Service - Trigger Access Charge, Per Trigger, Per DN, Term. Attempt | | | | BAPTT | | 7.60 | 7.60 | | | | | | | | |
| | AIN Toolkit Service - Trigger Access Charge, Per Trigger, Per DN, Off-Hook Delay | | | | BAPTD | | 7.60 | 7.60 | | | | | | | | |
| | AIN Toolkit Service - Trigger Access Charge, Per Trigger, Per DN, Off-Hook Immediate | | | | BAPTM | | 7.60 | 7.60 | | | | | | | | |
| | AIN Toolkit Service - Trigger Access Charge, Per Trigger, Per DN, 10-Digit PODP | | | | BAPTO | | 33.47 | 33.47 | | | | | | | | |
| | AIN Toolkit Service - Trigger Access Charge, Per Trigger, Per DN, CDP | | | | BAPTC | | 33.47 | 33.47 | | | | | | | | |
| | AIN Toolkit Service - Trigger Access Charge, Per Trigger, Per DN, Feature Code | | | | BAPTF | | 33.47 | 33.47 | | | | | | | | |
| | AIN Toolkit Service - Query Charge, Per Query | | | | | 0.0536446 | | | | | | | | | | |
| | AIN Toolkit Service - Type 1 Node Charge, Per AIN Toolkit Subscription, Per Node, Per Query | | | | | 0.006569 | | | | | | | | | | |
| | AIN Toolkit Service - SCP Storage Charge, Per SMS Access Account, Per 100 Kilobytes | | | | | 0.06 | | | | | | | | | | |
| | AIN Toolkit Service - Monthly report - Per AIN Toolkit Service Subscription | | | CAM | BAPMS | 10.90 | 7.60 | 7.60 | | | | | | | | |
| | AIN Toolkit Service - Special Study - Per AIN Toolkit Service Subscription | | | CAM | BAPLS | 2.80 | 8.41 | 8.41 | | | | | | | | |
| | AIN Toolkit Service - Call Event Report - Per AIN Toolkit Service Subscription | | | CAM | BAPDS | 8.20 | 7.60 | 7.60 | | | | | | | | |
| | AIN Toolkit Service - Call Event Special Study - Per AIN Toolkit Service Subscription | | | CAM | BAPES | 0.09 | 8.41 | 8.41 | | | | | | | | |
| ENHANCED EXTENDED LINK (EELs) | | | | | | | | | | | | | | | | |
| | NOTE: The monthly recurring and non-recurring charges below will apply and the Switch-As-Is Charge will not apply for UNE combinations provisioned as ' Ordinarily Combined' Network Elements. | | | | | | | | | | | | | | | |
| | NOTE: The monthly recurring and the Switch-As-Is Charge and not the non-recurring charges below will apply for UNE combinations provisioned as ' Currently Combined' Network Elements. | | | | | | | | | | | | | | | |
| | EXTENTED 2-WIRE VOICE GRADE EXTENDED LOOP WITH DEDICATED DS1 INTEROFFICE TRANSPORT | | | | | | | | | | | | | | | |

| UNBUNDLED NETWORK ELEMENTS - Louisiana | | | | | | | | | | | | | | Attachment: 2 | | Exhibit: A | |
|---|---|---|---|---|---|---|---|---|---|---|---|---|---|---|---|---|---|
| CATEGORY | | RATE ELEMENTS | Interim | Zone | BCS | USOC | RATES ($) | | | | | Svc Order Submitted Elec per LSR | Svc Order Submitted Manually per LSR | Incremental Charge - Manual Svc Order vs. Electronic-1st | Incremental Charge - Manual Svc Order vs. Electronic-Add'l | Incremental Charge - Manual Svc Order vs. Electronic-Disc 1st | Incremental Charge - Manual Svc Order vs. Electronic-Disc Add'l |
| | | | | | | | Rec | Nonrecurring | | Nonrecurring Disconnect | | OSS Rates ($) | | | | | |
| | | | | | | | | First | Add'l | First | Add'l | SOMEC | SOMAN | SOMAN | SOMAN | SOMAN | SOMAN |
| | | First 2-Wire VG Loop (SL2) in Combination - Zone 1 | | 1 | UNCVX | UEAL2 | 14.93 | 94.21 | 45.09 | | | | | | | | |
| | | First 2-Wire VG Loop (SL2) in Combination - Zone 2 | | 2 | UNCVX | UEAL2 | 25.35 | 94.21 | 45.09 | | | | | | | | |
| | | First 2-Wire VG Loop (SL2) in Combination - Zone 3 | | 3 | UNCVX | UEAL2 | 50.46 | 94.21 | 45.09 | | | | | | | | |
| | | Interoffice Transport - Dedicated - DS1 combination - Per Mile per month | | | UNC1X | 1L5XX | 0.2652 | | | | | | | | | | |
| | | Interoffice Transport - Dedicated - DS1 combination - Facility Termination per month | | | UNC1X | U1TF1 | 70.47 | 143.58 | 103.88 | | | | | | | | |
| | | 1/0 Channelization System in combination Per Month | | | UNC1X | MQ1 | 105.09 | 59.97 | 12.96 | | | | | | | | |
| | | Voice Grade COCI - Per Month | | | UNCVX | 1D1VG | 0.6497 | 5.91 | 4.26 | | | | | | | | |
| | | Each Additional 2-Wire VG Loop (SL 2) in Combination - Zone 1 | | 1 | UNCVX | UEAL2 | 14.93 | 94.21 | 45.09 | | | | | | | | |
| | | Each Additional 2-Wire VG Loop (SL 2) in Combination - Zone 2 | | 2 | UNCVX | UEAL2 | 25.35 | 94.21 | 45.09 | | | | | | | | |
| | | Each Additional 2-Wire VG Loop (SL 2) in Combination - Zone 3 | | 3 | UNCVX | UEAL2 | 50.46 | 94.21 | 45.09 | | | | | | | | |
| | | Voice Grade COCI - Per Month | | | UNCVX | 1D1VG | 0.6497 | 5.91 | 4.26 | | | | | | | | |
| | | Nonrecurring Currently Combined Network Elements Switch -As-Is Charge | | | UNC1X | UNCCC | | 5.43 | 5.43 | | | | | | | | |
| | | **EXTENDED 4-WIRE VOICE GRADE EXTENDED LOOP WITH DEDICATED DS1 INTEROFFICE TRANSPORT** | | | | | | | | | | | | | | | |
| | | First 4-Wire Analog Voice Grade Loop in Combination - Zone 1 | | 1 | UNCVX | UEAL4 | 30.81 | 94.21 | 45.09 | | | | | | | | |
| | | First 4-Wire Analog Voice Grade Loop in Combination - Zone 2 | | 2 | UNCVX | UEAL4 | 38.32 | 94.21 | 45.09 | | | | | | | | |
| | | First 4-Wire Analog Voice Grade Loop in Combination - Zone 3 | | 3 | UNCVX | UEAL4 | 60.39 | 94.21 | 45.09 | | | | | | | | |
| | | Interoffice Transport - Dedicated - DS1 combination - Per Mile Per Month | | | UNC1X | 1L5XX | 0.2652 | | | | | | | | | | |
| | | Interoffice Transport - Dedicated - DS1 - Facility Termination Per Month | | | UNC1X | U1TF1 | 70.47 | 143.58 | 103.88 | | | | | | | | |
| | | 1/0 Channel System in combination Per Month | | | UNC1X | MQ1 | 105.09 | 59.97 | 12.96 | | | | | | | | |
| | | Voice Grade COCI in combination - per month | | | UNCVX | 1D1VG | 0.6497 | 5.91 | 4.26 | | | | | | | | |
| | | Additional 4-Wire Analog Voice Grade Loop in same DS1 Interoffice Transport Combination - Zone 1 | | 1 | UNCVX | UEAL4 | 30.81 | 94.21 | 45.09 | | | | | | | | |
| | | Additional 4-Wire Analog Voice Grade Loop in same DS1 Interoffice Transport Combination - Zone 2 | | 2 | UNCVX | UEAL4 | 38.32 | 94.21 | 45.09 | | | | | | | | |
| | | Additional 4-Wire Analog Voice Grade Loop in same DS1 Interoffice Transport Combination - Zone 3 | | 3 | UNCVX | UEAL4 | 60.39 | 94.21 | 45.09 | | | | | | | | |
| | | Additional Voice Grade COCI in combination - per month | | | UNCVX | 1D1VG | 0.6497 | 5.91 | 4.26 | | | | | | | | |
| | | Nonrecurring Currently Combined Network Elements Switch -As-Is Charge | | | UNC1X | UNCCC | | 5.43 | 5.43 | | | | | | | | |
| | | **EXTENDED 4-WIRE 56 KBPS EXTENDED DIGITAL LOOP WITH DEDICATED DS1 INTEROFFICE TRANSPORT** | | | | | | | | | | | | | | | |
| | | First 4-Wire 56Kbps Digital Grade Loop in Combination - Zone 1 | | 1 | UNCDX | UDL56 | 30.99 | 94.21 | 45.09 | | | | | | | | |
| | | First 4-Wire 56Kbps Digital Grade Loop in Combination - Zone 2 | | 2 | UNCDX | UDL56 | 36.78 | 94.21 | 45.09 | | | | | | | | |
| | | First 4-Wire 56Kbps Digital Grade Loop in Combination - Zone 3 | | 3 | UNCDX | UDL56 | 38.92 | 94.21 | 45.09 | | | | | | | | |
| | | Interoffice Transport - Dedicated - DS1 combination - Per Mile Per Month | | | UNC1X | 1L5XX | 0.2652 | | | | | | | | | | |
| | | Interoffice Transport - Dedicated - DS1 - combination Facility Termination Per Month | | | UNC1X | U1TF1 | 70.47 | 143.58 | 103.88 | | | | | | | | |
| | | 1/0 Channel System in combination Per Month | | | UNC1X | MQ1 | 105.09 | 59.97 | 12.96 | | | | | | | | |
| | | OCU-DP COCI (data) per month (2.4-64kbs) | | | UNCDX | 1D1DD | 1.38 | 5.91 | 4.26 | | | | | | | | |
| | | Additional 4-Wire 56Kbps Digital Grade Loop in same DS1 Interoffice Transport Combination - Zone 1 | | 1 | UNCDX | UDL56 | 30.99 | 94.21 | 45.09 | | | | | | | | |
| | | Additional 4-Wire 56Kbps Digital Grade Loop in same DS1 Interoffice Transport Combination - Zone 2 | | 2 | UNCDX | UDL56 | 36.78 | 94.21 | 45.09 | | | | | | | | |
| | | Additional 4-Wire 56Kbps Digital Grade Loop in same DS1 Interoffice Transport Combination - Zone 3 | | 3 | UNCDX | UDL56 | 38.92 | 94.21 | 45.09 | | | | | | | | |

| UNBUNDLED NETWORK ELEMENTS - Louisiana | | | | | | | | | | | | | | Attachment: 2 | | Exhibit: A | |
|---|---|---|---|---|---|---|---|---|---|---|---|---|---|---|---|---|---|
| CATEGORY | | RATE ELEMENTS | Interim | Zone | BCS | USOC | RATES ($) | | | | | Svc Order Submitted Elec per LSR | Svc Order Submitted Manually per LSR | Incremental Charge - Manual Svc Order vs. Electronic-1st | Incremental Charge - Manual Svc Order vs. Electronic-Add'l | Incremental Charge - Manual Svc Order vs. Electronic-Disc 1st | Incremental Charge - Manual Svc Order vs. Electronic-Disc Add'l |
| | | | | | | | Rec | Nonrecurring | | Nonrecurring Disconnect | | OSS Rates ($) | | | | | |
| | | | | | | | | First | Add'l | First | Add'l | SOMEC | SOMAN | SOMAN | SOMAN | SOMAN | SOMAN |
| | | Additional OCU-DP COCI (data) - in combination per month (2.4-64kbs) | | | UNCDX | 1D1DD | 1.38 | 5.91 | 4.26 | | | | | | | | |
| | | Nonrecurring Currently Combined Network Elements Switch -As-Is Charge | | | UNC1X | UNCCC | | 5.43 | 5.43 | | | | | | | | |
| | EXTENDED 4-WIRE 64 KBPS EXTENDED DIGITAL LOOP WITH DEDICATED DS1 INTEROFFICE TRANSPORT | | | | | | | | | | | | | | | | |
| | | First 4-Wire 64Kbps Digital Grade Loop in Combination - Zone 1 | | 1 | UNCDX | UDL64 | 30.99 | 94.21 | 45.09 | | | | | | | | |
| | | First 4-Wire 64Kbps Digital Grade Loop in Combination - Zone 2 | | 2 | UNCDX | UDL64 | 36.78 | 94.21 | 45.09 | | | | | | | | |
| | | First 4-Wire 64Kbps Digital Grade Loop in Combination - Zone 3 | | 3 | UNCDX | UDL64 | 38.92 | 94.21 | 45.09 | | | | | | | | |
| | | Interoffice Transport - Dedicated - DS1 combination - Per Mile Per Month | | | UNC1X | 1L5XX | 0.2652 | | | | | | | | | | |
| | | interoffice Transport - Dedicated - DS1 combination - Facility Termination Per Month | | | UNC1X | U1TF1 | 70.47 | 143.58 | 103.88 | | | | | | | | |
| | | 1/0 Channel System in combination Per Month | | | UNC1X | MQ1 | 105.09 | 59.97 | 12.96 | | | | | | | | |
| | | OCU-DP COCI (data) - in combination - per month (2.4-64kbs) | | | UNCDX | 1D1DD | 1.38 | 5.91 | 4.26 | | | | | | | | |
| | | Additional 4-Wire 64Kbps Digital Grade Loop in same DS1 Interoffice Transport Combination - Zone 1 | | 1 | UNCDX | UDL64 | 30.99 | 94.21 | 45.09 | | | | | | | | |
| | | Additional 4-Wire 64Kbps Digital Grade Loop in same DS1 Interoffice Transport Combination - Zone 2 | | 2 | UNCDX | UDL64 | 36.78 | 94.21 | 45.09 | | | | | | | | |
| | | Additional 4-Wire 64Kbps Digital Grade Loop in same DS1 Interoffice Transport Combination - Zone 3 | | 3 | UNCDX | UDL64 | 38.92 | 94.21 | 45.09 | | | | | | | | |
| | | Additional OCU-DP COCI (data) - in combination - per month (2.4-64kbs) | | | UNCDX | 1D1DD | 1.38 | 5.91 | 4.26 | | | | | | | | |
| | | Nonrecurring Currently Combined Network Elements Switch -As-Is Charge | | | UNC1X | UNCCC | | 5.43 | 5.43 | | | | | | | | |
| | EXTENDED 4-WIRE DS1 DIGITAL EXTENDED LOOP WITH DEDICATED DS1 INTEROFFICE TRANSPORT | | | | | | | | | | | | | | | | |
| | | 4-Wire DS1 Digital Loop in Combination - Zone 1 | | 1 | UNC1X | USLXX | 85.70 | 169.22 | 100.89 | | | | | | | | |
| | | 4-Wire DS1 Digital Loop in Combination - Zone 2 | | 2 | UNC1X | USLXX | 194.96 | 169.22 | 100.89 | | | | | | | | |
| | | 4-Wire DS1 Digital Loop in Combination - Zone 3 | | 3 | UNC1X | USLXX | 491.94 | 169.22 | 100.89 | | | | | | | | |
| | | Interoffice Transport - Dedicated - DS1 combination - Per Mile Per Month | | | UNC1X | 1L5XX | 0.2652 | | | | | | | | | | |
| | | Interoffice Transport - Dedicated - DS1 combination - Facility Termination Per Month | | | UNC1X | U1TF1 | 70.47 | 143.58 | 103.88 | | | | | | | | |
| | | Nonrecurring Currently Combined Network Elements Switch -As-Is Charge | | | UNC1X | UNCCC | | 5.43 | 5.43 | | | | | | | | |
| | EXTENDED 4-WIRE DS1 DIGITAL EXTENDED LOOP WITH DEDICATED DS3 INTEROFFICE TRANSPORT | | | | | | | | | | | | | | | | |
| | | First DS1Loop in Combination - Zone 1 | | 1 | UNC1X | USLXX | 85.70 | 169.22 | 100.89 | | | | | | | | |
| | | First DS1Loop in Combination - Zone 2 | | 2 | UNC1X | USLXX | 194.96 | 169.22 | 100.89 | | | | | | | | |
| | | First DS1Loop in Combination - Zone 3 | | 3 | UNC1X | USLXX | 491.94 | 169.22 | 100.89 | | | | | | | | |
| | | Interoffice Transport - Dedicated - DS3 combination - Per Mile Per Month | | | UNC3X | 1L5XX | 6.04 | | | | | | | | | | |
| | | Interoffice Transport - Dedicated - DS3 - Facility Termination per month | | | UNC3X | U1TF3 | 850.45 | 296.68 | 121.16 | | | | | | | | |
| | | 3/1Channel System in combination per month | | | UNC3X | MQ3 | 201.48 | 107.05 | 91.25 | | | | | | | | |
| | | DS1 COCI in combination per month | | | UNC1X | UC1D1 | 11.78 | 5.91 | 4.26 | | | | | | | | |
| | | Additional DS1Loop in DS3 Interoffice Transport Combination - Zone 1 | | 1 | UNC1X | USLXX | 85.70 | 169.22 | 100.89 | | | | | | | | |
| | | Additional DS1Loop in DS3 Interoffice Transport Combination - Zone 2 | | 2 | UNC1X | USLXX | 194.96 | 169.22 | 100.89 | | | | | | | | |
| | | Additional DS1Loop in DS3 Interoffice Transport Combination - Zone 3 | | 3 | UNC1X | USLXX | 491.94 | 169.22 | 100.89 | | | | | | | | |
| | | Additoinal DS1 COCI in combination per month | | | UNC1X | UC1D1 | 11.78 | 5.91 | 4.26 | | | | | | | | |
| | | Nonrecurring Currently Combined Network Elements Switch -As-Is Charge | | | UNC3X | UNCCC | | 5.43 | 5.43 | | | | | | | | |
| | EXTENDED 2-WIRE VOICE GRADE EXTENDED LOOP/ 2 WIRE VOICE GRADE INTEROFFICE TRANSPORT | | | | | | | | | | | | | | | | |
| | | 2-WireVG Loop in combination - Zone 1 | | 1 | UNCVX | UEAL2 | 14.93 | 94.21 | 45.09 | | | | | | | | |
| | | 2-WireVG Loop in combination - Zone 2 | | 2 | UNCVX | UEAL2 | 25.35 | 94.21 | 45.09 | | | | | | | | |

| UNBUNDLED NETWORK ELEMENTS - Louisiana | | | | | | | | | | | | | | Attachment: 2 | | Exhibit: A | |
|---|---|---|---|---|---|---|---|---|---|---|---|---|---|---|---|---|---|
| CATEGORY | | RATE ELEMENTS | Interim | Zone | BCS | USOC | RATES ($) | | | | | Svc Order Submitted Elec per LSR | Svc Order Submitted Manually per LSR | Incremental Charge - Manual Svc Order vs. Electronic-1st | Incremental Charge - Manual Svc Order vs. Electronic-Add'l | Incremental Charge - Manual Svc Order vs. Electronic-Disc 1st | Incremental Charge - Manual Svc Order vs. Electronic-Disc Add'l |
| | | | | | | | Rec | Nonrecurring | | Nonrecurring Disconnect | | OSS Rates ($) | | | | | |
| | | | | | | | | First | Add'l | First | Add'l | SOMEC | SOMAN | SOMAN | SOMAN | SOMAN | SOMAN |
| | | 2-WireVG Loop in combination - Zone 3 | | 3 | UNCVX | UEAL2 | 50.46 | 94.21 | 45.09 | | | | | | | | |
| | | Interoffice Transport - 2-wire VG - Dedicated- Per Mile Per Month | | | UNCVX | 1L5XX | 0.013 | | | | | | | | | | |
| | | Interoffice Transport - 2-wire VG - Dedicated - Facility Termination per month | | | UNCVX | U1TV2 | 22.60 | 72.60 | 41.75 | | | | | | | | |
| | | Nonrecurring Currently Combined Network Elements Switch -As-Is Charge | | | UNCVX | UNCCC | | 5.43 | 5.43 | | | | | | | | |
| | | **EXTENDED 4-WIRE VOICE GRADE EXTENDED LOOP/ 4 WIRE VOICE GRADE INTEROFFICE TRANSPORT** | | | | | | | | | | | | | | | |
| | | 4-WireVG Loop in combination - Zone 1 | | 1 | UNCVX | UEAL4 | 30.81 | 94.21 | 45.09 | | | | | | | | |
| | | 4-WireVG Loop in combination - Zone 2 | | 2 | UNCVX | UEAL4 | 38.32 | 94.21 | 45.09 | | | | | | | | |
| | | 4-WireVG Loop in combination - Zone 3 | | 3 | UNCVX | UEAL4 | 60.39 | 94.21 | 45.09 | | | | | | | | |
| | | Interoffice Transport - 4-wire VG - Dedicated - Per Mile Per Month | | | UNCVX | 1L5XX | 0.013 | | | | | | | | | | |
| | | Interoffice Transport - 4-wire VG - Dedicated - Facility Termination per month | | | UNCVX | U1TV4 | 19.81 | 72.60 | 41.75 | | | | | | | | |
| | | Nonrecurring Currently Combined Network Elements Switch -As-Is Charge | | | UNCVX | UNCCC | | 5.43 | 5.43 | | | | | | | | |
| | | **EXTENDED DS3 DIGITAL EXTENDED LOOP WITH DEDICATED DS3 INTEROFFICE TRANSPORT** | | | | | | | | | | | | | | | |
| | | DS3 Local Loop in combination - per mile per month | | | UNC3X | 1L5ND | 10.04 | | | | | | | | | | |
| | | DS3 Local Loop in combination - Facility Termination per month | | | UNC3X | UE3PX | 362.34 | 188.45 | 125.51 | | | | | | | | |
| | | Interoffice Transport - Dedicated - DS3 - Per Mile per month | | | UNC3X | 1L5XX | 6.04 | | | | | | | | | | |
| | | Interoffice Transport - Dedicated - DS3 combination - Facility Termination per month | | | UNC3X | U1TF3 | 850.45 | 296.68 | 121.16 | | | | | | | | |
| | | Nonrecurring Currently Combined Network Elements Switch -As-Is Charge | | | UNC3X | UNCCC | | 5.43 | 5.43 | | | | | | | | |
| | | **EXTENDED STS-1 DIGITAL EXTENDED LOOP WITH DEDICATED STS-1 INTEROFFICE TRANSPORT** | | | | | | | | | | | | | | | |
| | | STS-1 Local Lolp in combination - per mile per month | | | UNCSX | 1L5ND | 10.04 | | | | | | | | | | |
| | | STS-1 Local Loop in combination - Facility Termination per month | | | UNCSX | UDLS1 | 374.56 | 188.45 | 125.51 | | | | | | | | |
| | | Interoffice Transport - Dedicated - STS-1 combination - per mile per month | | | UNCSX | 1L5XX | 6.04 | | | | | | | | | | |
| | | Interoffice Transport - Dedicated - STS-1 combination - Facility Termination per month | | | UNCSX | U1TFS | 830.19 | 296.68 | 121.16 | | | | | | | | |
| | | Nonrecurring Currently Combined Network Elements Switch -As-Is Charge | | | UNCSX | UNCCC | | 5.43 | 5.43 | | | | | | | | |
| | | **EXTENDED 2-WIRE ISDN EXTENDED LOOP WITH DS1 INTEROFFICE TRANSPORT** | | | | | | | | | | | | | | | |
| | | First 2-Wire ISDN Loop in Combination - Zone 1 | | 1 | UNCNX | U1L2X | 22.09 | 94.21 | 45.09 | | | | | | | | |
| | | First 2-Wire ISDN Loop in Combination - Zone 2 | | 2 | UNCNX | U1L2X | 35.28 | 94.21 | 45.09 | | | | | | | | |
| | | First 2-Wire ISDN Loop in Combination - Zone 3 | | 3 | UNCNX | U1L2X | 65.18 | 94.21 | 45.09 | | | | | | | | |
| | | Interoffice Transport - Dedicated - DS1 combination - per mile per month | | | UNC1X | 1L5XX | 0.2652 | | | | | | | | | | |
| | | Interoffice Transport - Dedicated - DS1 combination - Facility Termination per month | | | UNC1X | U1TF1 | 70.47 | 143.58 | 103.88 | | | | | | | | |
| | | 1/0 Channel System in combination - per month | | | UNC1X | MQ1 | 105.09 | 59.97 | 12.96 | | | | | | | | |
| | | 2-wire ISDN COCI (BRITE) - in combination - per month | | | UNCNX | UC1CA | 2.96 | 5.91 | 4.26 | | | | | | | | |
| | | Additional 2-wire ISDN Loop in same DS1Interoffice Transport Combination - Zone 1 | | 1 | UNCNX | U1L2X | 22.09 | 94.21 | 45.09 | | | | | | | | |
| | | Additional 2-wire ISDN Loop in same DS1Interoffice Transport Combination - Zone 2 | | 2 | UNCNX | U1L2X | 35.28 | 94.21 | 45.09 | | | | | | | | |
| | | Additional 2-wire ISDN Loop in same DS1Interoffice Transport Combination - Zone 3 | | 3 | UNCNX | U1L2X | 65.18 | 94.21 | 45.09 | | | | | | | | |
| | | Additional 2-wire ISDN COCI (BRITE) - in combination- per month | | | UNCNX | UC1CA | 2.96 | 5.91 | 4.26 | | | | | | | | |
| | | Nonrecurring Currently Combined Network Elements Switch -As-Is Charge | | | UNC1X | UNCCC | | 5.43 | 5.43 | | | | | | | | |
| | | **EXTENDED 4-WIRE DS1 DIGITAL EXTENDED LOOP WITH DEDICATED STS-1 INTEROFFICE TRANSPORT** | | | | | | | | | | | | | | | |
| | | First DS1 Loop Combination - Zone 1 | | 1 | UNC1X | USLXX | 85.70 | 169.22 | 100.89 | | | | | | | | |
| | | First DS1 Loop Combination - Zone 2 | | 2 | UNC1X | USLXX | 194.96 | 169.22 | 100.89 | | | | | | | | |

## UNBUNDLED NETWORK ELEMENTS - Louisiana

| CATEGORY | | RATE ELEMENTS | Interim | Zone | BCS | USOC | RATES ($) | | | | | Svc Order Submitted Elec per LSR | Svc Order Submitted Manually per LSR | Attachment: 2 Incremental Charge - Manual Svc Order vs. Electronic- 1st | Attachment: 2 Incremental Charge - Manual Svc Order vs. Electronic- Add'l | Exhibit: A Incremental Charge - Manual Svc Order vs. Electronic- Disc 1st | Exhibit: A Incremental Charge - Manual Svc Order vs. Electronic- Disc Add'l |
|---|---|---|---|---|---|---|---|---|---|---|---|---|---|---|---|---|---|
| | | | | | | | Rec | Nonrecurring | | Nonrecurring Disconnect | | OSS Rates ($) | | | | | |
| | | | | | | | | First | Add'l | First | Add'l | SOMEC | SOMAN | SOMAN | SOMAN | SOMAN | SOMAN |
| | | First DS1 Loop Combination - Zone 3 | | 3 | UNC1X | USLXX | 491.94 | 169.22 | 100.89 | | | | | | | | |
| | | Interoffice Transport - Dedicated - STS-1 combination - Per Mile Per Month | | | UNCSX | 1L5XX | 6.04 | | | | | | | | | | |
| | | Interoffice Transport - Dedicated - STS-1 combination - Facility Termination per month | | | UNCSX | U1TFS | 830.19 | 296.68 | 121.16 | | | | | | | | |
| | | 3/1 Channel System in combination per month | | | UNCSX | MQ3 | 201.48 | 107.05 | 91.25 | | | | | | | | |
| | | DS1 COCI in combination per month | | | UNC1X | UC1D1 | 11.78 | 5.91 | 4.26 | | | | | | | | |
| | | Additional DS1Loop in the same STS-1 Interoffice Transport Combination - Zone 1 | | 1 | UNC1X | USLXX | 85.70 | 169.22 | 100.89 | | | | | | | | |
| | | Additional DS1Loop in the same STS-1 Interoffice Transport Combination - Zone 2 | | 2 | UNC1X | USLXX | 194.96 | 169.22 | 100.89 | | | | | | | | |
| | | Additional DS1Loop in the same STS-1 Interoffice Transport Combination - Zone 3 | | 3 | UNC1X | USLXX | 491.94 | 169.22 | 100.89 | | | | | | | | |
| | | DS1 COCI in combination per month | | | UNC1X | UC1D1 | 11.78 | 5.91 | 4.26 | | | | | | | | |
| | | Nonrecurring Currently Combined Network Elements Switch -As-Is Charge | | | UNCSX | UNCCC | | 5.43 | 5.43 | | | | | | | | |
| | | **EXTENDED 4-WIRE 56 KBPS DIGITAL EXTENDED LOOP WITH 56 KBPS INTEROFFICE TRANSPORT** | | | | | | | | | | | | | | | |
| | | 4-wire 56 kbps Local Loop in combination - Zone 1 | | 1 | UNCDX | UDL56 | 30.99 | 94.21 | 45.09 | | | | | | | | |
| | | 4-wire 56 kbps Local Loop in combination - Zone 2 | | 2 | UNCDX | UDL56 | 36.78 | 94.21 | 45.09 | | | | | | | | |
| | | 4-wire 56 kbps Local Loop in combination - Zone 3 | | 3 | UNCDX | UDL56 | 38.92 | 94.21 | 45.09 | | | | | | | | |
| | | Interoffice Transport - Dedicated - 4-wire 56 kbps combination - Per Mile per month | | | UNCDX | 1L5XX | 0.013 | | | | | | | | | | |
| | | Interoffice Transport - Dedicated - 4-wire 56 kbps combination - Facility Termination per month | | | UNCDX | U1TD5 | 15.61 | 72.60 | 41.75 | | | | | | | | |
| | | Nonrecurring Currently Combined Network Elements Switch -As-Is Charge | | | UNCDX | UNCCC | | 5.43 | 5.43 | | | | | | | | |
| | | **EXTENDED 4-WIRE 64 KBPS DIGITAL EXTENDED LOOP WITH 64 KBPS INTEROFFICE TRANSPORT** | | | | | | | | | | | | | | | |
| | | 4-wire 64 kbps Lcoal Loop in Combination - Zone 1 | | 1 | UNCDX | UDL64 | 30.99 | 94.21 | 45.09 | | | | | | | | |
| | | 4-wire 64 kbps Lcoal Loop in Combination - Zone 2 | | 2 | UNCDX | UDL64 | 36.78 | 94.21 | 45.09 | | | | | | | | |
| | | 4-wire 64 kbps Lcoal Loop in Combination - Zone 3 | | 3 | UNCDX | UDL64 | 38.92 | 94.21 | 45.09 | | | | | | | | |
| | | Interoffice Transport - Dedicated - 4-wire 64 kbps combination - Per Mile per month | | | UNCDX | 1L5XX | 0.013 | | | | | | | | | | |
| | | Interoffice Transport - Dedicated - 4-wire 64 kbps combination - Facility Termination per month | | | UNCDX | U1TD6 | 15.61 | 72.60 | 41.75 | | | | | | | | |
| | | Nonrecurring Currently Combined Network Elements Switch -As-Is Charge | | | UNCDX | UNCCC | | 5.43 | 5.43 | | | | | | | | |
| | | **EXTENDED 2-WIRE VOICE GRADE LOOP WITH DS1 INTEROFFICE TRANSPORT w/ 3/1 MUX** | | | | | | | | | | | | | | | |
| | | First 2-wire VG Loop (SL2) in Combination - Zone 1 | | 1 | UNCVX | UEAL2 | 14.93 | 94.21 | 45.09 | | | | | | | | |
| | | First 2-wire VG Loop (SL2) in Combination - Zone 2 | | 2 | UNCVX | UEAL2 | 25.35 | 94.21 | 45.09 | | | | | | | | |
| | | First 2-wire VG Loop (SL2) in Combination - Zone 3 | | 3 | UNCVX | UEAL2 | 50.46 | 94.21 | 45.09 | | | | | | | | |
| | | First Interoffice Transport - Dedicated - DS1 combination - Per Mile | | | UNC1X | 1L5XX | 0.2652 | | | | | | | | | | |
| | | First Interoffice Transport - Dedicated - DS1 combination - Facility Termination per month | | | UNC1X | U1TF1 | 70.47 | 143.58 | 103.88 | | | | | | | | |
| | | Per each DS1 Channelization System Per Month | | | UNC1X | MQ1 | 105.09 | 59.97 | 12.96 | | | | | | | | |
| | | Per each Voice Grade COCI - Per Month per month | | | UNCVX | 1D1VG | 0.6497 | 5.91 | 4.26 | | | | | | | | |
| | | 3/1 Channel System in combination per month | | | UNC3X | MQ3 | 201.48 | 107.05 | 91.25 | | | | | | | | |
| | | Per each DS1 COCI in combination per month | | | UNC1X | UC1D1 | 11.78 | 5.91 | 4.26 | | | | | | | | |
| | | Each Additional 2-Wire VG Loop(SL 2) in the same DS1 Interoffice Transport Combination - Zone 1 | | 1 | UNCVX | UEAL2 | 14.93 | 94.21 | 45.09 | | | | | | | | |
| | | Each Additional 2-Wire VG Loop(SL2) in the same DS1 Interoffice Transport Combination - Zone 2 | | 2 | UNCVX | UEAL2 | 25.35 | 94.21 | 45.09 | | | | | | | | |
| | | Each Additional 2-Wire VG Loop(SL2) in the same DS1 Interoffice Transport Combination - Zone 3 | | 3 | UNCVX | UEAL2 | 50.46 | 94.21 | 45.09 | | | | | | | | |
| | | Each Additional Voice Grade COCI in combination - per month | | | UNCVX | 1D1VG | 0.6497 | 5.91 | 4.26 | | | | | | | | |
| | | Each Additional DS1 Interoffice Channel per mile in same 3/1 Channel System per month | | | UNC1X | 1L5XX | 0.2652 | | | | | | | | | | |
| | | Each Additional DS1 Interoffice Channel Facility Termination in same 3/1 Channel System per month | | | UNC1X | U1TF1 | 70.47 | 143.58 | 103.88 | | | | | | | | |

## UNBUNDLED NETWORK ELEMENTS - Louisiana

| CATEGORY | | RATE ELEMENTS | Interim | Zone | BCS | USOC | RATES ($) | | | | | Svc Order Submitted Elec per LSR | Svc Order Submitted Manually per LSR | Attachment: 2 Incremental Charge - Manual Svc Order vs. Electronic- 1st | Attachment: 2 Incremental Charge - Manual Svc Order vs. Electronic- Add'l | Exhibit: A Incremental Charge - Manual Svc Order vs. Electronic- Disc 1st | Exhibit: A Incremental Charge - Manual Svc Order vs. Electronic- Disc Add'l |
|---|---|---|---|---|---|---|---|---|---|---|---|---|---|---|---|---|---|
| | | | | | | | Rec | Nonrecurring | | Nonrecurring Disconnect | | OSS Rates ($) | | | | | |
| | | | | | | | | First | Add'l | First | Add'l | SOMEC | SOMAN | SOMAN | SOMAN | SOMAN | SOMAN |
| | | Each Additional DS1 COCI combination per month | | | UNC1X | UC1D1 | 11.78 | 5.91 | 4.26 | | | | | | | | |
| | | Nonrecurring Currently Combined Network Elements Switch -As-Is Charge | | | UNC1X | UNCCC | | 5.43 | 5.43 | | | | | | | | |
| | | **EXTENDED 4-WIRE VOICE GRADE LOOP WITH DEDICATED DS1 INTEROFFICE TRANSPORT w/ 3/1 MUX** | | | | | | | | | | | | | | | |
| | | First 4-Wire Analog Voice Grade Local Loop in Combination - Zone 1 | | 1 | UNCVX | UEAL4 | 30.81 | 94.21 | 45.09 | | | | | | | | |
| | | First 4-Wire Analog Voice Grade Local Loop in Combination - Zone 2 | | 2 | UNCVX | UEAL4 | 38.32 | 94.21 | 45.09 | | | | | | | | |
| | | First 4-Wire Analog Voice Grade Local Loop in Combination - Zone 3 | | 3 | UNCVX | UEAL4 | 60.39 | 94.21 | 45.09 | | | | | | | | |
| | | First Interoffice Transport - Dedicated - DS1 combination - Per Mile Per Month | | | UNC1X | 1L5XX | 0.2652 | | | | | | | | | | |
| | | First Interoffice Transport - Dedicated - DS1 - Facility Termination Per Month | | | UNC1X | U1TF1 | 70.47 | 143.58 | 103.88 | | | | | | | | |
| | | Per each 1/0 Channel System in combination Per Month | | | UNC1X | MQ1 | 105.09 | 59.97 | 12.96 | | | | | | | | |
| | | Per each Voice Grade COCI in combination - per month | | | UNCVX | 1D1VG | 0.6497 | 5.91 | 4.26 | | | | | | | | |
| | | 3/1 Channel System in combination per month | | | UNC3X | MQ3 | 201.48 | 107.05 | 91.25 | | | | | | | | |
| | | Per each DS1 COCI in combination per month | | | UNC1X | UC1D1 | 11.78 | 5.91 | 4.26 | | | | | | | | |
| | | Additional 4-Wire Analog Voice Grade Loop in same DS1 Interoffice Transport Combination - Zone 1 | | 1 | UNCVX | UEAL4 | 30.81 | 94.21 | 45.09 | | | | | | | | |
| | | Additional 4-Wire Analog Voice Grade Loop in same DS1 Interoffice Transport Combination - Zone 2 | | 2 | UNCVX | UEAL4 | 38.32 | 94.21 | 45.09 | | | | | | | | |
| | | Additional 4-Wire Analog Voice Grade Loop in same DS1 Interoffice Transport Combination - Zone 3 | | 3 | UNCVX | UEAL4 | 60.39 | 94.21 | 45.09 | | | | | | | | |
| | | Each Additional DS1 Interoffice Channel per mile in same 3/1 Channel System per month | | | UNC1X | 1L5XX | 0.2652 | | | | | | | | | | |
| | | Each Additional DS1 Interoffice Channel Facility Termination in same 3/1 Channel System per month | | | UNC1X | U1TF1 | 70.47 | 143.58 | 103.88 | | | | | | | | |
| | | Additional Voice Grade COCI - in combination - per month | | | UNCVX | 1D1VG | 0.6497 | 5.91 | 4.26 | | | | | | | | |
| | | Nonrecurring Currently Combined Network Elements Switch -As-Is Charge | | | UNC1X | UNCCC | | 5.43 | 5.43 | | | | | | | | |
| | | **EXTENDED 4-WIRE 56 KBPS DIGITAL LOOP WITH DEDICATED DS1 INTEROFFICE TRANSPORT w/ 3/1 MUX** | | | | | | | | | | | | | | | |
| | | First 4-Wire 56Kbps Digital Grade Local Loop in Combination - Zone 1 | | 1 | UNCDX | UDL56 | 30.99 | 94.21 | 45.09 | | | | | | | | |
| | | First 4-Wire 56Kbps Digital Grade Local Loop in Combination - Zone 2 | | 2 | UNCDX | UDL56 | 36.78 | 94.21 | 45.09 | | | | | | | | |
| | | First 4-Wire 56Kbps Digital Grade Local Loop in Combination - Zone 3 | | 3 | UNCDX | UDL56 | 38.92 | 94.21 | 45.09 | | | | | | | | |
| | | First Interoffice Transport - Dedicated - DS1 combination - Per Mile Per Month | | | UNC1X | 1L5XX | 0.2652 | | | | | | | | | | |
| | | First Interoffice Transport - Dedicated - DS1 - combination Facility Termination Per Month | | | UNC1X | U1TF1 | 70.47 | 143.58 | 103.88 | | | | | | | | |
| | | Per each 1/0 Channel System in combination Per Month | | | UNC1X | MQ1 | 105.09 | 59.97 | 12.96 | | | | | | | | |
| | | Per each OCU-DP COCI (data) COCI per month (2.4-64kbs) | | | UNCDX | 1D1DD | 1.38 | 5.91 | 4.26 | | | | | | | | |
| | | 3/1 Channel System in combination per month | | | UNC3X | MQ3 | 201.48 | 107.05 | 91.25 | | | | | | | | |
| | | Per each DS1 COCI in combination per month | | | UNC1X | UC1D1 | 11.78 | 5.91 | 4.26 | | | | | | | | |
| | | Additional 4-Wire 56Kbps Digital Grade Loop in same DS1 Interoffice Transport Combination - Zone 1 | | 1 | UNCDX | UDL56 | 30.99 | 94.21 | 45.09 | | | | | | | | |
| | | Additional 4-Wire 56Kbps Digital Grade Loop in same DS1 Interoffice Transport Combination - Zone 2 | | 2 | UNCDX | UDL56 | 36.78 | 94.21 | 45.09 | | | | | | | | |
| | | Additional 4-Wire 56Kbps Digital Grade Loop in same DS1 Interoffice Transport Combination - Zone 3 | | 3 | UNCDX | UDL56 | 38.92 | 94.21 | 45.09 | | | | | | | | |
| | | OCU-DP COCI (data) COCI in combination per month (2.4-64kbs) | | | UNCDX | 1D1DD | 1.38 | 5.91 | 4.26 | | | | | | | | |
| | | Each Additional DS1 Interoffice Channel per mile in same 3/1 Channel System per month | | | UNC1X | 1L5XX | 0.2652 | | | | | | | | | | |
| | | Each Additional DS1 Interoffice Channel Facility Termination in same 3/1 Channel System per month | | | UNC1X | U1TF1 | 70.47 | 143.58 | 103.88 | | | | | | | | |

| UNBUNDLED NETWORK ELEMENTS - Louisiana | | | | | | | | | | | | | | Attachment: 2 | | Exhibit: A | |
|---|---|---|---|---|---|---|---|---|---|---|---|---|---|---|---|---|---|
| CATEGORY | | RATE ELEMENTS | Interl m | Zone | BCS | USOC | RATES ($) | | | | | Svc Order Submitted Elec per LSR | Svc Order Submitted Manually per LSR | Incremental Charge - Manual Svc Order vs. Electronic-1st | Incremental Charge - Manual Svc Order vs. Electronic-Add'l | Incremental Charge - Manual Svc Order vs. Electronic-Disc 1st | Incremental Charge - Manual Svc Order vs. Electronic-Disc Add'l |
| | | | | | | | Rec | Nonrecurring | | Nonrecurring Disconnect | | OSS Rates ($) | | | | | |
| | | | | | | | | First | Add'l | First | Add'l | SOMEC | SOMAN | SOMAN | SOMAN | SOMAN | SOMAN |
| | | Each Additional DS1 COCI in the same 3/1 channel system combination per month | | | UNC1X | UC1D1 | 11.78 | 5.91 | 4.26 | | | | | | | | |
| | | Nonrecurring Currently Combined Network Elements Switch -As-Is Charge | | | UNC1X | UNCCC | | 5.43 | 5.43 | | | | | | | | |
| | | **EXTENDED 4-WIRE 64 KBPS DIGITAL LOOP WITH DEDICATED DS1 INTEROFFICE TRANSPORT w/ 3/1 MUX** | | | | | | | | | | | | | | | |
| | | First 4-Wire 64Kbps Digital Grade Loop in a DS1 Interoffice Transport Combination - Zone 1 | | 1 | UNCDX | UDL64 | 30.99 | 94.21 | 45.09 | | | | | | | | |
| | | First 4-Wire 64Kbps Digital Grade Loop in a DS1 Interoffice Transport Combination - Zone 2 | | 2 | UNCDX | UDL64 | 36.78 | 94.21 | 45.09 | | | | | | | | |
| | | First 4-Wire 64Kbps Digital Grade Loop in a DS1 Interoffice Transport Combination - Zone 3 | | 3 | UNCDX | UDL64 | 38.92 | 94.21 | 45.09 | | | | | | | | |
| | | First Interoffice Transport - Dedicated - DS1 combination - Per Mile Per Month | | | UNC1X | 1L5XX | 0.2652 | | | | | | | | | | |
| | | First Interoffice Transport - Dedicated - DS1 combination - Facility Termination Per Month | | | UNC1X | U1TF1 | 70.47 | 143.58 | 103.88 | | | | | | | | |
| | | Per each Channel System 1/0 in combination Per Month | | | UNC1X | MQ1 | 105.09 | 59.97 | 12.96 | | | | | | | | |
| | | Per each OCU-DP COCI (data) in combination - per month (2.4-64kbs) | | | UNCDX | 1D1DD | 1.38 | 5.91 | 4.26 | | | | | | | | |
| | | 3/1 Channel System in combination per month | | | UNC3X | MQ3 | 201.48 | 107.05 | 91.25 | | | | | | | | |
| | | Per each DS1 COCI in combination per month | | | UNC1X | UC1D1 | 11.78 | 5.91 | 4.26 | | | | | | | | |
| | | Additional 4-Wire 64Kbps Digital Grade Loop in same DS1 Interoffice Transport Combination - Zone 1 | | 1 | UNCDX | UDL64 | 30.99 | 94.21 | 45.09 | | | | | | | | |
| | | Additional 4-Wire 64Kbps Digital Grade Loop in same DS1 Interoffice Transport Combination - Zone 2 | | 2 | UNCDX | UDL64 | 36.78 | 94.21 | 45.09 | | | | | | | | |
| | | Additional 4-Wire 64Kbps Digital Grade Loop in same DS1 Interoffice Transport Combination - Zone 3 | | 3 | UNCDX | UDL64 | 38.92 | 94.21 | 45.09 | | | | | | | | |
| | | Additional OCU-DP COCI (data) - DS1 to DS0 Channel System combination - per month (2.4-64kbs) | | | UNCDX | 1D1DD | 1.38 | 5.91 | 4.26 | | | | | | | | |
| | | Each Additional DS1 Interoffice Channel per mile in same 3/1 Channel System per month | | | UNC1X | 1L5XX | 0.2652 | | | | | | | | | | |
| | | Each Additional DS1 Interoffice Channel Facility Termination in same 3/1 Channel System per month | | | UNC1X | U1TF1 | 70.47 | 143.58 | 103.88 | | | | | | | | |
| | | Each Additional DS1 COCI in the same 3/1 channel system combination per month | | | UNC1X | UC1D1 | 11.78 | 5.91 | 4.26 | | | | | | | | |
| | | Nonrecurring Currently Combined Network Elements Switch -As-Is Charge | | | UNC1X | UNCCC | | 5.43 | 5.43 | | | | | | | | |
| | | **EXTENDED 2-WIRE ISDN LOOP WITH DS1 INTEROFFICE TRANSPORT w/ 3/1 MUX** | | | | | | | | | | | | | | | |
| | | First 2-Wire ISDN Loop in a DS1 Interoffice Combination Transport - Zone 1 | | 1 | UNCNX | U1L2X | 22.09 | 94.21 | 45.09 | | | | | | | | |
| | | First 2-Wire ISDN Loop in a DS1 Interoffice Combination Transport - Zone 2 | | 2 | UNCNX | U1L2X | 35.28 | 94.21 | 45.09 | | | | | | | | |
| | | First 2-Wire ISDN Loop in a DS1 Interoffice Combination Transport - Zone 3 | | 3 | UNCNX | U1L2X | 65.18 | 94.21 | 45.09 | | | | | | | | |
| | | First Interoffice Transport - Dedicated - DS1 combination - Per Mile per month | | | UNC1X | 1L5XX | 0.2652 | | | | | | | | | | |
| | | First Interoffice Transport - Dedicated - DS1 combination - Facility Termination per month | | | UNC1X | U1TF1 | 70.47 | 143.58 | 103.88 | | | | | | | | |
| | | Per each Channel System 1/0 in combination - per month | | | UNC1X | MQ1 | 105.09 | 59.97 | 12.96 | | | | | | | | |
| | | Per each 2-wire ISDN COCI (BRITE) in combination - per month | | | UNCNX | UC1CA | 2.96 | 5.91 | 4.26 | | | | | | | | |
| | | 3/1 Channel System in combination per month | | | UNC3X | MQ3 | 201.48 | 107.05 | 91.25 | | | | | | | | |
| | | Per each DS1 COCI in combination per month | | | UNC1X | UC1D1 | 11.78 | 5.91 | 4.26 | | | | | | | | |
| | | Additional 2-wire ISDN Loop in same DS1Interoffice Transport Combination - Zone 1 | | 1 | UNCNX | U1L2X | 22.09 | 94.21 | 45.09 | | | | | | | | |
| | | Additional 2-wire ISDN Loop in same DS1Interoffice Transport Combination - Zone 2 | | 2 | UNCNX | U1L2X | 35.28 | 94.21 | 45.09 | | | | | | | | |
| | | Additional 2-wire ISDN Loop in same DS1Interoffice Transport Combination - Zone 3 | | 3 | UNCNX | U1L2X | 65.18 | 94.21 | 45.09 | | | | | | | | |

## UNBUNDLED NETWORK ELEMENTS - Louisiana

| CATEGORY | RATE ELEMENTS | Interim | Zone | BCS | USOC | RATES ($) | | | | | Svc Order Submitted Elec per LSR | Svc Order Submitted Manually per LSR | Attachment: 2 Incremental Charge - Manual Svc Order vs. Electronic- 1st | Attachment: 2 Incremental Charge - Manual Svc Order vs. Electronic- Add'l | Exhibit: A Incremental Charge - Manual Svc Order vs. Electronic- Disc 1st | Exhibit: A Incremental Charge - Manual Svc Order vs. Electronic- Disc Add'l |
|---|---|---|---|---|---|---|---|---|---|---|---|---|---|---|---|---|
| | | | | | | Rec | Nonrecurring | | Nonrecurring Disconnect | | OSS Rates ($) | | | | | |
| | | | | | | | First | Add'l | First | Add'l | SOMEC | SOMAN | SOMAN | SOMAN | SOMAN | SOMAN |
| | Additional 2-wire ISDN COCI (BRITE) in same 1/0 channel system combination- per month | | | UNCNX | UC1CA | 2.96 | 5.91 | 4.26 | | | | | | | | |
| | Each Additional DS1 Interoffice Channel per mile in same 3/1 Channel System per month | | | UNC1X | 1L5XX | 0.2652 | | | | | | | | | | |
| | Each Additional DS1 Interoffice Channel Facility Termination in same 3/1 Channel System per month | | | UNC1X | U1TF1 | 70.47 | 143.58 | 103.88 | | | | | | | | |
| | Each Additional DS1 COCI in the same 3/1 channel system combination per month | | | UNC1X | UC1D1 | 11.78 | 5.91 | 4.26 | | | | | | | | |
| | Nonrecurring Currently Combined Network Elements Switch -As-Is Charge | | | UNC1X | UNCCC | | 5.43 | 5.43 | | | | | | | | |
| | **EXTENDED 4-WIRE DS1 LOOP WITH DEDICATED DS1 INTEROFFICE TRANSPORT w/ 3/1 MUX** | | | | | | | | | | | | | | | |
| | First 4-wire DS1 Digital Lcoal Loop in Combination - Zone 1 | | 1 | UNC1X | USLXX | 85.70 | 169.22 | 100.89 | | | | | | | | |
| | First 4-wire DS1 Digital Lcoal Loop in Combination - Zone 2 | | 2 | UNC1X | USLXX | 194.96 | 169.22 | 100.89 | | | | | | | | |
| | First 4-wire DS1 Digital Lcoal Loop in Combination - Zone 3 | | 3 | UNC1X | USLXX | 491.94 | 169.22 | 100.89 | | | | | | | | |
| | First Interoffice Transport - Dedicated - DS1 combination - Per Mile Per Month | | | UNC1X | 1L5XX | 0.2652 | | | | | | | | | | |
| | First Interoffice Transport - Dedicated - DS1 combination - Facility Termination Per Month | | | UNC1X | U1TF1 | 70.47 | 143.58 | 103.88 | | | | | | | | |
| | 3/1 Channel System in combination per month | | | UNC3X | MQ3 | 201.48 | 107.05 | 91.25 | | | | | | | | |
| | Per each DS1 COCI combination per month | | | UNC1X | UC1D1 | 11.78 | 5.91 | 4.26 | | | | | | | | |
| | Each Additional DS1 Interoffice Channel per mile in same 3/1 Channel System per month | | | UNC1X | 1L5XX | 0.2652 | | | | | | | | | | |
| | Each Additional DS1 Interoffice Channel Facility Termination in same 3/1 Channel System per month | | | UNC1X | U1TF1 | 70.47 | 143.58 | 103.88 | | | | | | | | |
| | Each Additional DS1 COCI in the same 3/1 channel system combination per month | | | UNC1X | UC1D1 | 11.78 | 5.91 | 4.26 | | | | | | | | |
| | Additional 4-Wire DS1 Digital Local Loop in Combination - Zone 1 | | 1 | UNC1X | USLXX | 85.70 | 169.22 | 100.89 | | | | | | | | |
| | Additional 4-Wire DS1 Digital Local Loop in Combination - Zone 2 | | 2 | UNC1X | USLXX | 194.96 | 169.22 | 100.89 | | | | | | | | |
| | Additional 4-Wire DS1 Digital Local Loop in Combination - Zone 3 | | 3 | UNC1X | USLXX | 491.94 | 169.22 | 100.89 | | | | | | | | |
| | Nonrecurring Currently Combined Network Elements Switch -As-Is Charge | | | UNC1X | UNCCC | | 5.43 | 5.43 | | | | | | | | |
| | **EXTENDED 4-WIRE 56 KBPS DIGITAL EXTENDED LOOP WITH DS0 INTEROFFICE TRANSPORT** | | | | | | | | | | | | | | | |
| | First 4-wire 56 kbps Local Loop in combination - Zone 1 | | 1 | UNCDX | UDL56 | 30.99 | 94.21 | 45.09 | | | | | | | | |
| | First 4-wire 56 kbps Local Loop in combination - Zone 2 | | 2 | UNCDX | UDL56 | 36.78 | 94.21 | 45.09 | | | | | | | | |
| | First 4-wire 56 kbps Local Loop in combination - Zone 3 | | 3 | UNCDX | UDL56 | 38.92 | 94.21 | 45.09 | | | | | | | | |
| | First 4-wiree 56 kbps Interoffice Transport - Dedicated - Per Mile per month | | | UNCDX | 1L5XX | 0.013 | | | | | | | | | | |
| | First 4-wire 56 kbps Interoffice Transport - Dedicated - Facility Termination per month | | | UNCDX | U1TD5 | 15.61 | 72.60 | 41.75 | | | | | | | | |
| | Nonrecurring Currently Combined Network Elements Switch -As-Is Charge | | | UNCDX | UNCCC | | 5.43 | 5.43 | | | | | | | | |
| | **EXTENDED 4-WIRE 64 KBPS DIGITAL EXTENDED LOOP WITH DS0 INTEROFFICE TRANSPORT** | | | | | | | | | | | | | | | |
| | First 4-wire 64 kbps Local Loop in combination - Zone 1 | | 1 | UNCDX | UDL64 | 30.99 | 94.21 | 45.09 | | | | | | | | |
| | First 4-wire 64 kbps Local Loop in combination - Zone 2 | | 2 | UNCDX | UDL64 | 36.78 | 94.21 | 45.09 | | | | | | | | |
| | First 4-wire 64 kbps Local Loop in combination - Zone 3 | | 3 | UNCDX | UDL64 | 38.92 | 94.21 | 45.09 | | | | | | | | |
| | First l4-wire 65 kbps Interoffice Transport - Dedicated - Per Mile per month | | | UNCDX | 1L5XX | 0.013 | | | | | | | | | | |
| | First 4-wire 64 kbps Interoffice Transport - Dedicated - Facility Termination per month | | | UNCDX | U1TD6 | 15.61 | 72.60 | 41.75 | | | | | | | | |
| | Nonrecurring Currently Combined Network Elements Switch -As-Is Charge | | | UNCDX | UNCCC | | 5.43 | 5.43 | | | | | | | | |
| **ADDITIONAL NETWORK ELEMENTS** | | | | | | | | | | | | | | | | |
| | **When used as a part of a currently combined facility, the non-recurrng charges do not apply, but a Switch As Is charge does apply.** | | | | | | | | | | | | | | | |
| | **When used as ordinarily combined network elements in All States, the non-recurring charges apply and the Switch As Is Charge does not.** | | | | | | | | | | | | | | | |
| | **Nonrecurring Currently Combined Network Elements "Switch As Is" Charge (One applies to each combination)** | | | | | | | | | | | | | | | |

| UNBUNDLED NETWORK ELEMENTS - Louisiana | | | | | | | | | | | | | | Attachment: 2 | | Exhibit: A | |
|---|---|---|---|---|---|---|---|---|---|---|---|---|---|---|---|---|---|
| CATEGORY | RATE ELEMENTS | Interim | Zone | BCS | USOC | RATES ($) | | | | | Svc Order Submitted Elec per LSR | Svc Order Submitted Manually per LSR | Incremental Charge - Manual Svc Order vs. Electronic-1st | Incremental Charge - Manual Svc Order vs. Electronic-Add'l | Incremental Charge - Manual Svc Order vs. Electronic-Disc 1st | Incremental Charge - Manual Svc Order vs. Electronic-Disc Add'l |
| | | | | | | Rec | Nonrecurring | | Nonrecurring Disconnect | | OSS Rates ($) | | | | | |
| | | | | | | | First | Add'l | First | Add'l | SOMEC | SOMAN | SOMAN | SOMAN | SOMAN | SOMAN |
| | Nonrecurring Currently Combined Network Elements Switch -As-Is Charge - 2 wire/4-Wire VG | | | UNCVX | UNCCC | | 5.43 | 5.43 | | | | | | | | |
| | Nonrecurring Currently Combined Network Elements Switch -As-Is Charge - 56/64 kbps | | | UNCDX | UNCCC | | 5.43 | 5.43 | | | | | | | | |
| | Nonrecurring Currently Combined Network Elements Switch -As-Is Charge - DS1 | | | UNC1X | UNCCC | | 5.43 | 5.43 | | | | | | | | |
| | Nonrecurring Currently Combined Network Elements Switch -As-Is Charge - DS3 | | | UNC3X | UNCCC | | 5.43 | 5.43 | | | | | | | | |
| | Nonrecurring Currently Combined Network Elements Switch -As-Is Charge - STS1 | | | UNCSX | UNCCC | | 5.43 | 5.43 | | | | | | | | |
| | **Optional Features & Functions:** | | | | | | | | | | | | | | | |
| | Clear Channel Capability Extended Frame Option - per DS1 | I | | U1TD1, ULDD1,UNC1X | CCOEF | | 0I | 0I | 0I | 0I | | | | | | |
| | Clear Channel Capability Super FrameOption - per DS1 | I | | U1TD1, ULDD1,UNC1X | CCOSF | | 0I | 0I | 0I | 0I | | | | | | |
| | Clear Channel Capability (SF/ESF) Option - Subsequent Activity - per DS1 | I | | ULDD1, U1TD1, UNC1X, USL | NRCCC | | 184.65S | 23.79S | 1.97S | 0.77S | | | | | | |
| | C-bit Parity Option - Subsequent Activity - per DS3 | i | | U1TD3, ULDD3, UE3, UNC3X | NRCC3 | | 218.78S | 7.66S | .7263S | 0S | | | | | | |
| | **MULTIPLEXERS** | | | | | | | | | | | | | | | |
| | DS1 to DS0 Channel System per month | | | UNC1X | MQ1 | 105.09 | 59.97 | 12.96 | | | | | | | | |
| | OCU-DP COCI (data) - DS1 to DS0 Channel System - per month (2.4-64kbs) used for a Local Loop | | | UDL | 1D1DD | 1.38 | 6.39 | 4.58 | | | | | | | | |
| | OCU-DP COCI (data) - DS1 to DS0 Channel System - per month (2.4-64kbs) used for connection to a channelized DS1 Local Channel in the same SWC as collocation | | | U1TUD | 1D1DD | 1.38 | 6.39 | 4.58 | | | | | | | | |
| | 2-wire ISDN COCI (BRITE) - DS1 to DS0 Channel Systsem - per month for a Local Loop | | | UDN | UC1CA | 2.96 | 6.39 | 4.58 | | | | | | | | |
| | 2-wire ISDN COCI (BRITE) - DS1 to DS0 Channel Systsem - per month used for connection to a channelized DS1 Local Channel in the same SWC as collocation | | | U1TUB | UC1CA | 2.96 | 6.39 | 4.58 | | | | | | | | |
| | Voice Grade COCI - DS1 to DS0 Channel System - per month used for a Local Loop | | | UEA | 1D1VG | 0.6497 | 6.39 | 4.58 | | | | | | | | |
| | Voice Grade COCI - DS1 to DS0 Channel System - per month used for connection to a channelized DS1 Local Channel in the same SWC as collocation | | | U1TUC | 1D1VG | 0.6497 | 6.39 | 4.58 | | | | | | | | |
| | DS3 to DS1 Channel System per month | | | UNC3X | MQ3 | 201.48 | 107.05 | 91.25 | | | | | | | | |
| | STS-1 to DS1 Channel System per month | | | UNCSX | MQ3 | 201.48 | 107.05 | 91.25 | | | | | | | | |
| | DS1 COCI used with Loop per month | | | USL | UC1D1 | 11.78 | 6.39 | 4.58 | | | | | | | | |
| | DS1 COCI (used for connection to a channelized DS1 Local Channel in the same SWC as collocation) per month | | | U1TUA | UC1D1 | 11.78 | 6.39 | 4.58 | | | | | | | | |
| | DS1 COCI used with Interoffice Channel per month | | | U1TD1 | UC1D1 | 11.78 | 6.39 | 4.58 | | | | | | | | |
| | DS3 Interface Unit (DS1 COCI) used with Local Channel per month | | | ULDD1 | UC1D1 | 11.78 | 6.39 | 4.58 | | | | | | | | |
| **UNBUNDLED LOCAL EXCHANGE SWITCHING(PORTS)** | | | | | | | | | | | | | | | | |
| | **Exchange Ports** | | | | | | | | | | | | | | | |
| | **NOTE: Although the Port Rate includes all available features in GA, KY, LA & TN, the desired features will need to be ordered using retail USOCs** | | | | | | | | | | | | | | | |
| | **2-WIRE VOICE GRADE LINE PORT RATES (RES)** | | | | | | | | | | | | | | | |
| | Exchange Ports - 2-Wire Analog Line Port- Res. | | | UEPSR | UEPRL | 1.52 | 2.31 | 2.21 | | | | | | | | |
| | Exchange Ports - 2-Wire Analog Line Port with Caller ID - Res. | | | UEPSR | UEPRC | 1.52 | 2.31 | 2.21 | | | | | | | | |
| | Exchange Ports - 2-Wire Analog Line Port outgoing only - Res. | | | UEPSR | UEPRO | 1.52 | 2.31 | 2.21 | | | | | | | | |
| | Exchange Ports - 2-Wire VG unbundled LA extended local dialing parity Port with Caller ID - Res. | | | UEPSR | UEPAS | 1.52 | 2.31 | 2.21 | | | | | | | | |
| | Exchange Ports - 2-Wire VG unbundled Louisiana Area Plus with Caller ID - Res (RUL) | | | UEPSR | UEPAG | 1.52 | 2.31 | 2.21 | | | | | | | | |
| | Exchange Ports - 2-Wire VG unbundled res, low usage line port with Caller ID (LUM) | | | UEPSR | UEPAP | 1.52 | 2.31 | 2.21 | | | | | | | | |

| UNBUNDLED NETWORK ELEMENTS - Louisiana | | | | | | | | | | | | | | Attachment: 2 | | Exhibit: A | |
|---|---|---|---|---|---|---|---|---|---|---|---|---|---|---|---|---|---|
| CATEGORY | RATE ELEMENTS | Interim | Zone | BCS | USOC | RATES ($) | | | | | Svc Order Submitted Elec per LSR | Svc Order Submitted Manually per LSR | Incremental Charge - Manual Svc Order vs. Electronic-1st | Incremental Charge - Manual Svc Order vs. Electronic-Add'l | Incremental Charge - Manual Svc Order vs. Electronic-Disc 1st | Incremental Charge - Manual Svc Order vs. Electronic-Disc Add'l |
| | | | | | | Rec | Nonrecurring | | Nonrecurring Disconnect | | OSS Rates ($) | | | | | |
| | | | | | | | First | Add'l | First | Add'l | SOMEC | SOMAN | SOMAN | SOMAN | SOMAN | SOMAN |
| | Exchange Ports - 2-Wire VG Louisiana Residence Dialing Plan without Caller ID | | | UEPSR | UEPWG | 1.52 | 2.31 | 2.21 | | | | | | | | |
| | Exchange Ports - 2-Wire VG Louisiana Residence Area Plus without Caller ID | | | UEPSR | UEPRQ | 1.52 | 2.31 | 2.21 | | | | | | | | |
| | 2-Wire voice unbundled Low Usage Line Port without Caller ID Capability | | | UEPSR | UEPRT | 1.52 | 2.31 | 2.21 | | | | | | | | |
| | Subsequent Activity | | | UEPSR | USASC | 0.00 | 0.00 | 0.00 | | | | | | | | |
| FEATURES | | | | | | | | | | | | | | | | |
| | All Available Vertical Features | | | UEPSR | UEPVF | 0.00 | 0.00 | 0.00 | | | | | | | | |
| 2-WIRE VOICE GRADE LINE PORT RATES (BUS) | | | | | | | | | | | | | | | | |
| | Exchange Ports - 2-Wire Analog Line Port without Caller ID - Bus | | | UEPSB | UEPBL | 1.52 | 2.31 | 2.21 | | | | | | | | |
| | Exchange Ports - 2-Wire VG unbundled Line Port with unbundled port with Caller+E484 ID - Bus. | | | UEPSB | UEPBC | 1.52 | 2.31 | 2.21 | | | | | | | | |
| | Exchange Ports - 2-Wire Analog Line Port outgoing only - Bus. | | | UEPSB | UEPBO | 1.52 | 2.31 | 2.21 | | | | | | | | |
| | Exchange Ports - 2-Wire VG unbundled LA extended local dialing parity Port with Caller ID - Bus. | | | UEPSB | UEPAX | 1.52 | 2.31 | 2.21 | | | | | | | | |
| | Exhange Ports - 2-Wire VG unbundled incoming only port with Caller ID - Bus | | | UEPSB | UEPB1 | 1.52 | 2.31 | 2.21 | | | | | | | | |
| | Exchange Ports - 2-Wire VG unbundled Louisiana Bus Area Calling Port with Caller ID - Bus (BUC) | | | UEPSB | UEPAA | 1.52 | 2.31 | 2.21 | | | | | | | | |
| | Exchange Ports - 2-Wire Voice Louisiana Business Dialing Plan without Caller ID | | | UEPSB | UEPWH | 1.52 | 2.31 | 2.21 | | | | | | | | |
| | Exchange Ports - 2-Wire Voice Louisiana Business Area Calling Port without Caller ID | | | UEPSB | UEPBA | 1.52 | 2.31 | 2.21 | | | | | | | | |
| | 2-Wire voice unbundled Incoming Only Port without Caller ID Capability | | | UEPSB | UEPBE | 1.52 | 2.31 | 2.21 | | | | | | | | |
| | Subsequent Activity | | | UEPSB | USASC | 0.00 | 0.00 | 0.00 | | | | | | | | |
| FEATURES | | | | | | | | | | | | | | | | |
| | All Available Vertical Features | | | UEPSB | UEPVF | 0.00 | 0.00 | 0.00 | | | | | | | | |
| EXCHANGE PORT RATES (DID & PBX) | | | | | | | | | | | | | | | | |
| | 2-Wire VG Unbundled 2-Way PBX Trunk - Res | | | UEPSE | UEPRD | 1.52 | 30.37 | 14.42 | | | | | | | | |
| | 2-Wire VG Line Side Unbundled 2-Way PBX Trunk - Bus | | | UEPSP | UEPPC | 1.52 | 30.37 | 14.42 | | | | | | | | |
| | 2-Wire VG Line Side Unbundled Outward PBX Trunk - Bus | | | UEPSP | UEPPO | 1.52 | 30.37 | 14.42 | | | | | | | | |
| | 2-Wire VG Line Side Unbundled Incoming PBX Trunk - Bus | | | UEPSP | UEPP1 | 1.52 | 30.37 | 14.42 | | | | | | | | |
| | 2-Wire Analog Long Distance Terminal PBX Trunk - Bus | | | UEPSP | UEPLD | 1.52 | 30.37 | 14.42 | | | | | | | | |
| | 2-Wire Voice Unbundled 2-Way PBX Louisiana Calling Port | | | UEPSP | UEPL2 | 1.52 | 30.37 | 14.42 | | | | | | | | |
| | 2-Wire Voice Unbundled PBX LD Terminal Ports | | | UEPSP | UEPLD | 1.52 | 30.37 | 14.42 | | | | | | | | |
| | 2-Wire Vice Unbundled 2-Way PBX Usage Port | | | UEPSP | UEPXA | 1.52 | 30.37 | 14.42 | | | | | | | | |
| | 2-Wire Voice Unbundled PBX Toll Terminal Hotel Ports | | | UEPSP | UEPXB | 1.52 | 30.37 | 14.42 | | | | | | | | |
| | 2-Wire Voice Unbundled PBX LD DDD Terminals Port | | | UEPSP | UEPXC | 1.52 | 30.37 | 14.42 | | | | | | | | |
| | 2-Wire Voice Unbundled PBX LD Terminal Switchboard Port | | | UEPSP | UEPXD | 1.52 | 30.37 | 14.42 | | | | | | | | |
| | 2-Wire Voice Unbundled PBX LD Terminal Switchboard IDD Capable Port | | | UEPSP | UEPXE | 1.52 | 30.37 | 14.42 | | | | | | | | |
| | 2-Wire Voice Unbundled 2-Way PBX Louisiana Local Optional Callling Port | | | UEPSP | UEPXK | 1.52 | 30.37 | 14.42 | | | | | | | | |
| | 2-Wire Voice Unbundled 2-Way PBX Hotel/Hospital Economy Administrative Calling Port | | | UEPSP | UEPXL | 1.52 | 30.37 | 14.42 | | | | | | | | |
| | 2-Wire Voice Unbundled 2-Way PBX Hotel/Hospital Economy Room Calling Port | | | UEPSP | UEPXM | 1.52 | 30.37 | 14.42 | | | | | | | | |
| | 2-Wire Voice Unbundled 1-Way Outgoing PBX Hotel/Hospital Discount Room Calling Port | | | UEPSP | UEPXO | 1.52 | 30.37 | 14.42 | | | | | | | | |
| | 2-Wire Voice Unbundled 1-Way Outgoing PBX Louisiana Local Discount Calling Port | | | UEPSP | UEPXP | 1.52 | 30.37 | 14.42 | | | | | | | | |
| | 2-Wire Voice Unbundled 1-Way Outgoing PBX Measured Port | | | UEPSP | UEPXS | 1.52 | 30.37 | 14.42 | | | | | | | | |
| | Subsequent Activity | | | UEPSP | USASC | 0.00 | 0.00 | 0.00 | | | | | | | | |
| FEATURES | | | | | | | | | | | | | | | | |
| | All Available Vertical Features | | | UEPSP UEPSE | UEPVF | 0.00 | 0.00 | 0.00 | | | | | | | | |

| UNBUNDLED NETWORK ELEMENTS - Louisiana | | | | | | | | | | | | | | Attachment: 2 | | Exhibit: A | |
|---|---|---|---|---|---|---|---|---|---|---|---|---|---|---|---|---|---|
| CATEGORY | RATE ELEMENTS | Interim | Zone | BCS | USOC | RATES ($) | | | | | Svc Order Submitted Elec per LSR | Svc Order Submitted Manually per LSR | Incremental Charge - Manual Svc Order vs. Electronic-1st | Incremental Charge - Manual Svc Order vs. Electronic-Add'l | Incremental Charge - Manual Svc Order vs. Electronic-Disc 1st | Incremental Charge - Manual Svc Order vs. Electronic-Disc Add'l |
| | | | | | | Rec | Nonrecurring | | Nonrecurring Disconnect | | OSS Rates ($) | | | | | |
| | | | | | | | First | Add'l | First | Add'l | SOMEC | SOMAN | SOMAN | SOMAN | SOMAN | SOMAN |
| | EXCHANGE PORT RATES (COIN) | | | | | | | | | | | | | | | |
| | Exchange Ports - Coin Port | | | | | 1.52 | 2.31 | 2.21 | | | | | | | | |
| | NOTE: Transmission/usage charges associated with POTS circuit switched usage will also apply to circuit switched voice and/or circuit switched data transmission by B-Channels associated with 2-wire ISDN ports. | | | | | | | | | | | | | | | |
| | NOTE: Access to B Channel or D Channel Packet capabilities will be available only through BFR/New Business Request Process. Rates for the packet capabilities will be determined via the Bona Fide Request/New Business Request Process. | | | | | | | | | | | | | | | |
| UNBUNDLED LOCAL EXCHANGE SWITCHING(PORTS) | | | | | | | | | | | | | | | | |
| | EXCHANGE PORT RATES | | | | | | | | | | | | | | | |
| | The DS1 Port rates below for 4-Wire DDITS Trunk Port and 4-Wire ISDN Port in this rate exhibit apply to the embedded base in place as of 10/2/03 until 4/1/04. After 4/1/04 these rates shall revert to tariff rates or a separate agreement. | | | | | | | | | | | | | | | |
| | Requests for 4-Wire DDITS Trunk Ports with 4-Wire ISDN DS1 Ports after the effective date of this amendment shall be provided pursuant to a separate agreement or tariff at BellSouth's discretion. | | | | | | | | | | | | | | | |
| | Exchange Ports - 2-Wire DID Port | | | UEPEX | UEPP2 | 8.29 | 115.85 | 18.20 | | | | | | | | |
| | Exchange Ports - DDITS Port - 4-Wire DS1 Port with DID capability (E:4/1/2004) | | | UEPDD | UEPDD | 68.47 | 196.18 | 92.92 | | | | | | | | |
| | Exchange Ports - 2-Wire ISDN Port (See Notes below.) | | | UEPTX, UEPSX | U1PMA | 10.07 | 70.76 | 51.46 | | | | | | | | |
| | All Features Offered | | | UEPTX, UEPSX | UEPVF | 0.00 | 0.00 | 0.00 | | | | | | | | |
| | Exchange Ports - 2-Wire ISDN Port -- Channel Profiles | | | UEPTX, UEPSX | U1UMA | 0.00 | 0.00 | 0.00 | | | | | | | | |
| | NOTE: Transmission/usage charges associated with POTS circuit switched usage will also apply to circuit switched voice and/or circuit switched data transmission by B-Channels associated with 2-wire ISDN ports. | | | | | | | | | | | | | | | |
| | NOTE: Access to B Channel or D Channel Packet capabilities will be available only through BFR/New Business Request Process. Rates for the packet capabilities will be determined via the Bona Fide Request/New Business Request Process. | | | | | | | | | | | | | | | |
| | EXCHANGE PORT RATES (continued) | | | | | | | | | | | | | | | |
| | Exchange Ports - 4-Wire ISDN DS1 Port with Detailed E911 Locator Capability (E:4/1/2004) | | | UEPEX | UEPEX | 94.82 | 197.92 | 98.62 | | | | | | | | |
| | Exchange Ports - 4-Wire ISDN DS1 Port (E:4/1/2004) | | | UEPDX | UEPDX | 94.82 | 197.92 | 98.62 | | | | | | | | |
| | Physical Collocation - DS1 Cross-Connects | | | UEPEX UEPDX | PE1P1 | 1.04 | 21.39 | 15.47 | | | | | | | | |
| | Virtual collocation - Special Access & UNE, cross-connect per DS1 | | | UEPEX UEPDX | CNC1X | 1.04 | 21.39 | 15.47 | | | | | | | | |
| | Detailed E911 with Locator Capability (required with UEPEX port) | | | | | | | | | | | | | | | |
| | Unbundled Exchange Ports, 4-Wire ISDN DS1 Port - E911 Locator Capability - Initial Profile Establishment per CLEC per State | | | UEPEX | UEP1A | 0.00 | 1,792.00 | | | | | | | | | |
| | Unbundled Exchange Ports, 4-Wire ISDN DS1 Port - E911 Locator Capability - Subsequent Profile Changes, Additions, Deletions | | | UEPEX | UEP1B | 0.00 | 174.03 | | | | | | | | | |
| | New or Additional PRI Telephone Numbers | | | | | | | | | | | | | | | |
| | Unbundled Exchange Ports, 4-Wire ISDN DS1 Port - E911 Locator Capability 2-way Telephone Numbers, per number in E911 profile [New or Additional] | | | UEPEX | UEP1C | 0.0692 | 0.48 | | | | | | | | | |
| | Unbundled Exchange Ports, 4-Wire ISDN DS1 Port - E911 Locator Capability - Outdial Telephone Numbers, per number in E911 profile [New or Additional] | | | UEPEX | UEP1D | 0.0692 | 11.18 | 11.18 | | | | | | | | |
| | Unbundled Exchange Ports, 4-Wire ISDN DS1 Port - Inward Telephone Numbers - Inward Data Only Option [New or Additional] | | | UEPDX | UEP1E | 0.00 | 0.48 | | | | | | | | | |
| | Exchange Ports - 4-Wire ISDN DS1 Port - Subsequent [New] Inward Tel Numbers [Customer Testing Purposes] | | | UEPEX | PR7ZT | 0.00 | 22.35 | 22.35 | | | | | | | | |
| | LOCAL NUMBER PORTABILITY | | | | | | | | | | | | | | | |
| | Local Number Portability (1 per port) | | | UEPEX UEPDX | LNPCN | 1.75 | | | | | | | | | | |
| | INTERFACE (Provsioning Only) | | | | | | | | | | | | | | | |
| | Voice/Data | | | UEPEX | PR71V | 0.00 | 0.00 | 0.00 | | | | | | | | |
| | Digital Data | | | UEPEX | PR71D | 0.00 | 0.00 | 0.00 | | | | | | | | |
| | Inward Data | | | UEPDX | PR71E | 0.00 | 0.00 | 0.00 | | | | | | | | |
| | New or Additional Channel | | | | | | | | | | | | | | | |
| | New or Additional - Voice/Data "B" Channel | | | UEPEX | PR7BV | 0.00 | 14.11 | | | | | | | | | |
| | New or Additional - Digital Data "B" Channel | | | UEPEX | PR7BF | 0.00 | 14.11 | | | | | | | | | |
| | New or Additional Inward Data "B" Channel | | | UEPDX | PR7BD | 0.00 | 14.11 | | | | | | | | | |
| | New or Additional Useage Sensitive Voice Data "B" Channel | | | UEPEX | PR7BS | 0.00 | 14.11 | | | | | | | | | |
| | New or Additional Useage Sensitive Digital Data "B" Channel | | | UEPEX | PR7BU | 0.00 | 14.11 | | | | | | | | | |
| | New or Additional PRI "D" Channel | | | UEPEX | PR7EX | 0.00 | 14.11 | | | | | | | | | |
| | CALL TYPES | | | | | | | | | | | | | | | |
| | Inward | | | UEPEX UEPDX | PR7C1 | 0.00 | 0.00 | 0.00 | | | | | | | | |
| | Outward | | | UEPEX | PR7CO | 0.00 | 0.00 | 0.00 | | | | | | | | |
| | Two-way | | | UEPEX | PR7CC | 0.00 | 0.00 | 0.00 | | | | | | | | |

## UNBUNDLED NETWORK ELEMENTS - Louisiana

| CATEGORY | RATE ELEMENTS | Interim | Zone | BCS | USOC | RATES ($) | | | | | Svc Order Submitted Elec per LSR | Svc Order Submitted Manually per LSR | Attachment: 2 Incremental Charge - Manual Svc Order vs. Electronic- 1st | Attachment: 2 Incremental Charge - Manual Svc Order vs. Electronic- Add'l | Exhibit: A Incremental Charge - Manual Svc Order vs. Electronic- Disc 1st | Exhibit: A Incremental Charge - Manual Svc Order vs. Electronic- Disc Add'l |
|---|---|---|---|---|---|---|---|---|---|---|---|---|---|---|---|---|
| | | | | | | Rec | Nonrecurring | | Nonrecurring Disconnect | | OSS Rates ($) | | | | | |
| | | | | | | | First | Add'l | First | Add'l | SOMEC | SOMAN | SOMAN | SOMAN | SOMAN | SOMAN |
| | **UNBUNDLED PORT with REMOTE CALL FORWARDING CAPABILITY** | | | | | | | | | | | | | | | |
| | **UNBUNDLED REMOTE CALL FORWARDING SERVICE - RESIDENCE** | | | | | | | | | | | | | | | |
| | Unbundled Remote Call Forwarding Service, Area Calling, Res | | | UEPVR | UERAC | 1.52 | 2.31 | 2.21 | | | | | | | | |
| | Unbundled Remote Call Forwarding Service, Local Calling - Res | | | UEPVR | UERLC | 1.52 | 2.31 | 2.21 | | | | | | | | |
| | Unbundled Remote Call Forwarding Service, InterLATA - Res | | | UEPVR | UERTE | 1.52 | 2.31 | 2.21 | | | | | | | | |
| | Unbundled Remote Call Forwarding Service, IntraLATA - Res | | | UEPVR | UERTR | 1.52 | 2.31 | 2.21 | | | | | | | | |
| | **Non-Recurring** | | | | | | | | | | | | | | | |
| | Unbundled Remote Call Forwarding Service - Conversion - Switch-as-is | | | UEPVR | USAC2 | | 0.10 | 0.10 | | | | | | | | |
| | Unbundled Remote Call Forwarding Service - Conversion with allowed change (PIC and LPIC) | | | UEPVR | USACC | | 0.10 | 0.10 | | | | | | | | |
| | **UNBUNDLED REMOTE CALL FORWARDING - Bus** | | | | | | | | | | | | | | | |
| | Unbundled Remote Call Forwarding Service, Area Calling - Bus | | | UEPVB | UERAC | 1.52 | 2.31 | 2.21 | | | | | | | | |
| | Unbundled Remote Call Forwarding Service, Local Calling - Bus | | | UEPVB | UERLC | 1.52 | 2.31 | 2.21 | | | | | | | | |
| | Unbundled Remote Call Forwarding Service, InterLATA - Bus | | | UEPVB | UERTE | 1.52 | 2.31 | 2.21 | | | | | | | | |
| | Unbundled Remote Call Forwarding Service, IntraLATA - Bus | | | UEPVB | UERTR | 1.52 | 2.31 | 2.21 | | | | | | | | |
| | Unbundled Remote Call Forwarding Service Expanded and Exception Local Calling | | | UEPVB | UERVJ | 1.52 | 2.31 | 2.21 | | | | | | | | |
| | **Non-Recurring** | | | | | | | | | | | | | | | |
| | Unbundled Remote Call Forwarding Service - Conversion - Switch-as-is | | | UEPVB | USAC2 | | 0.10 | 0.10 | | | | | | | | |
| | Unbundled Remote Call Forwarding Service - Conversion with allowed change (PIC and LPIC) | | | UEPVB | USACC | | 0.10 | 0.10 | | | | | | | | |
| **UNBUNDLED LOCAL SWITCHING, PORT USAGE** | | | | | | | | | | | | | | | | |
| | **End Office Switching (Port Usage)** | | | | | | | | | | | | | | | |
| | End Office Switching Function, Per MOU | | | | | 0.001868 | | | | | | | | | | |
| | End Office Trunk Port - Shared, Per MOU | | | | | 0.00018 | | | | | | | | | | |
| | **Tandem Switching (Port Usage) (Local or Access Tandem)** | | | | | | | | | | | | | | | |
| | Tandem Switching Function Per MOU | | | | | 0.0001067 | | | | | | | | | | |
| | Tandem Trunk Port - Shared, Per MOU | | | | | 0.000222 | | | | | | | | | | |
| | Tandem Switching Function Per MOU (Melded) | | | | | 0.000035296 | | | | | | | | | | |
| | Tandem Trunk Port - Shared, Per MOU (Melded) | | | | | 0.000073438 | | | | | | | | | | |
| | Melded Factor: 33.08% of the Tandem Rate | | | | | | | | | | | | | | | |
| | **Common Transport** | | | | | | | | | | | | | | | |
| | Common Transport - Per Mile, Per MOU | | | | | 0.0000032 | | | | | | | | | | |
| | Common Transport - Facilities Termination Per MOU | | | | | 0.0003748 | | | | | | | | | | |
| **UNBUNDLED PORT/LOOP COMBINATIONS - COST BASED RATES** | | | | | | | | | | | | | | | | |
| | **Cost Based Rates are applied where BellSouth is required by FCC and/or State Commission rule to provide Unbundled Local Switching or Switch Ports.** | | | | | | | | | | | | | | | |
| | **Features shall apply to the Unbundled Port/Loop Combination - Cost Based Rate section in the same manner as they are applied to the Stand-Alone Unbundled Port section of this Rate Exhibit.** | | | | | | | | | | | | | | | |
| | **End Office and Tandem Switching Usage and Common Transport Usage rates in the Port section of this rate exhibit shall apply to all combinations of loop/port network elements except for UNE Coin Port/Loop Combinations.** | | | | | | | | | | | | | | | |
| | **The first and additional Port nonrecurring charges apply to Not Currently Combined Combos. For Currently Combined Combos the nonrecurring charges shall be those identified in the Nonrecurring - Currently Combined sections.** | | | | | | | | | | | | | | | |
| | **2-WIRE VOICE GRADE LOOP WITH 2-WIRE LINE PORT (RES)** | | | | | | | | | | | | | | | |
| | **UNE Port/Loop Combination Rates** | | | | | | | | | | | | | | | |
| | 2-Wire VG Loop/Port Combo - Zone 1 | | 1 | | | 13.13 | | | | | | | | | | |
| | 2-Wire VG Loop/Port Combo - Zone 2 | | 2 | | | 23.75 | | | | | | | | | | |
| | 2-Wire VG Loop/Port Combo - Zone 3 | | 3 | | | 49.62 | | | | | | | | | | |
| | **UNE Loop Rates** | | | | | | | | | | | | | | | |
| | 2-Wire Voice Grade Loop (SL1) - Zone 1 | | 1 | UEPRX | UEPLX | 11.77 | | | | | | | | | | |
| | 2-Wire Voice Grade Loop (SL1) - Zone 2 | | 2 | UEPRX | UEPLX | 22.39 | | | | | | | | | | |
| | 2-Wire Voice Grade Loop (SL1) - Zone 3 | | 3 | UEPRX | UEPLX | 48.26 | | | | | | | | | | |
| | **2-Wire Voice Grade Line Port Rates (Res)** | | | | | | | | | | | | | | | |
| | 2-Wire voice unbundled port - residence | | | UEPRX | UEPRL | 1.36 | 38.85 | 19.08 | | | | | | | | |
| | 2-Wire voice unbundled port with Caller ID - res | | | UEPRX | UEPRC | 1.36 | 38.85 | 19.08 | | | | | | | | |
| | 2-Wire voice unbundled port outgoing only - res | | | UEPRX | UEPRO | 1.36 | 38.85 | 19.08 | | | | | | | | |
| | 2-Wire voice Grade unbundled Louisiana extended local dialing parity port with Caller ID - res | | | UEPRX | UEPAS | 1.36 | 38.85 | 19.08 | | | | | | | | |

| UNBUNDLED NETWORK ELEMENTS - Louisiana | | | | | | | | | | | | | | Attachment: 2 | | Exhibit: A | |
|---|---|---|---|---|---|---|---|---|---|---|---|---|---|---|---|---|---|
| CATEGORY | RATE ELEMENTS | Interim | Zone | BCS | USOC | RATES ($) | | | | | Svc Order Submitted Elec per LSR | Svc Order Submitted Manually per LSR | Incremental Charge - Manual Svc Order vs. Electronic-1st | Incremental Charge - Manual Svc Order vs. Electronic-Add'l | Incremental Charge - Manual Svc Order vs. Electronic-Disc 1st | Incremental Charge - Manual Svc Order vs. Electronic-Disc Add'l |
| | | | | | | Rec | Nonrecurring | | Nonrecurring Disconnect | | OSS Rates ($) | | | | | |
| | | | | | | | First | Add'l | First | Add'l | SOMEC | SOMAN | SOMAN | SOMAN | SOMAN | SOMAN |
| | 2-Wire voice unbundled Louisiana Area Plus with Caller ID - res (RUL) | | | UEPRX | UEPAG | 1.36 | 38.85 | 19.08 | | | | | | | | |
| | 2-Wire voice unbundles res, low usage line port with Caller ID (LUM) | | | UEPRX | UEPAP | 1.36 | 38.85 | 19.08 | | | | | | | | |
| | 2-Wire Voice Unbundled Louisiana Residence Dialing Plan without Caller ID | | | UEPRX | UEPWG | 1.36 | 38.85 | 19.08 | | | | | | | | |
| | 2-Wire voice unbundled Louisiana Area Plus Port without Caller ID Capability | | | UEPRX | UEPRQ | 1.36 | 38.85 | 19.08 | | | | | | | | |
| | 2-Wire voice unbundled Low Usage Line Port without Caller ID Capability | | | UEPRX | UEPRT | 1.36 | 38.85 | 19.08 | | | | | | | | |
| **FEATURES** | | | | | | | | | | | | | | | | |
| | All Features Offered | | | UEPRX | UEPVF | 0.00 | 0.00 | 0.00 | | | | | | | | |
| **LOCAL NUMBER PORTABILITY** | | | | | | | | | | | | | | | | |
| | Local Number Portability (1 per port) | | | UEPRX | LNPCX | 0.35 | | | | | | | | | | |
| **NONRECURRING CHARGES (NRCs) - CURRENTLY COMBINED** | | | | | | | | | | | | | | | | |
| | 2-Wire Voice Grade Loop / Line Port Combination - Conversion - Switch-as-is | | | UEPRX | USAC2 | | 0.10 | 0.10 | | | | | | | | |
| | 2-Wire Voice Grade Loop / Line Port Combination - Conversion - Switch with change | | | UEPRX | USACC | | 0.10 | 0.10 | | | | | | | | |
| **ADDITIONAL NRCs** | | | | | | | | | | | | | | | | |
| | 2-Wire Voice Grade Loop/Line Port Combination - Subsequent Activity | | | UEPRX | USAS2 | 0.00 | 0.00 | 0.00 | | | | | | | | |
| | Unbundled Miscellaneous Rate Element, Tag Loop at End User Premise | | | UEPRX | URETL | | 8.33 | 0.83 | | | | | | | | |
| **OFF/ON PREMISES EXTENSION CHANNELS** | | | | | | | | | | | | | | | | |
| | 2 Wire Analog Voice Grade Extension Loop – Non-Design | | 1 | UEPRX | UEAEN | 12.90 | 36.54 | 16.87 | | | | | | | | |
| | 2 Wire Analog Voice Grade Extension Loop – Non-Design | | 2 | UEPRX | UEAEN | 23.33 | 36.54 | 16.87 | | | | | | | | |
| | 2 Wire Analog Voice Grade Extension Loop – Non-Design | | 3 | UEPRX | UEAEN | 48.43 | 36.54 | 16.87 | | | | | | | | |
| | 2 Wire Analog Voice Grade Extension Loop – Design | | 1 | UEPRX | UEAED | 14.93 | 102.10 | 65.72 | | | | | | | | |
| | 2 Wire Analog Voice Grade Extension Loop – Design | | 2 | UEPRX | UEAED | 25.35 | 102.10 | 65.72 | | | | | | | | |
| | 2 Wire Analog Voice Grade Extension Loop – Design | | 3 | UEPRX | UEAED | 50.46 | 102.10 | 65.72 | | | | | | | | |
| **INTEROFFICE TRANSPORT** | | | | | | | | | | | | | | | | |
| | Interoffice Transport - Dedicated - 2 Wire Voice Grade - Facility Termination | | | UEPRX | U1TV2 | 22.60 | 39.36 | 26.62 | | | | | | | | |
| | Interoffice Transport - Dedicated - 2 Wire Voice Grade - Per Mile or Fraction Mile | | | UEPRX | U1TVM | 0.013 | 0.00 | 0.00 | | | | | | | | |
| **2-WIRE VOICE GRADE LOOP WITH 2-WIRE LINE PORT (BUS)** | | | | | | | | | | | | | | | | |
| **UNE Port/Loop Combination Rates** | | | | | | | | | | | | | | | | |
| | 2-Wire VG Loop/Port Combo - Zone 1 | | 1 | | | 13.13 | | | | | | | | | | |
| | 2-Wire VG Loop/Port Combo - Zone 2 | | 2 | | | 23.75 | | | | | | | | | | |
| | 2-Wire VG Loop/Port Combo - Zone 3 | | 3 | | | 49.62 | | | | | | | | | | |
| **UNE Loop Rates** | | | | | | | | | | | | | | | | |
| | 2-Wire Voice Grade Loop (SL1) - Zone 1 | | 1 | UEPBX | UEPLX | 11.77 | | | | | | | | | | |
| | 2-Wire Voice Grade Loop (SL1) - Zone 2 | | 2 | UEPBX | UEPLX | 22.39 | | | | | | | | | | |
| | 2-Wire Voice Grade Loop (SL1) - Zone 3 | | 3 | UEPBX | UEPLX | 48.26 | | | | | | | | | | |
| **2-Wire Voice Grade Line Port (Bus)** | | | | | | | | | | | | | | | | |
| | 2-Wire voice unbundled port without Caller ID - bus | | | UEPBX | UEPBL | 1.36 | 38.85 | 19.08 | | | | | | | | |
| | 2-Wire voice unbundled port with Caller + E484 ID - bus | | | UEPBX | UEPBC | 1.36 | 38.85 | 19.08 | | | | | | | | |
| | 2-Wire voice unbundled port outgoing only - bus | | | UEPBX | UEPBO | 1.36 | 38.85 | 19.08 | | | | | | | | |
| | 2-Wire voice Grade unbundled Louisiana extended local dialing parity port with Caller ID - bus | | | UEPBX | UEPAX | 1.36 | 38.85 | 19.08 | | | | | | | | |
| | 2-Wire voice unbundled incoming only port with Caller ID - Bus | | | UEPBX | UEPB1 | 1.36 | 38.85 | 19.08 | | | | | | | | |
| | 2-Wire voice unbundled Louisiana Bus Area Calling Port with Caller ID (BUC) | | | UEPBX | UEPAA | 1.36 | 38.85 | 19.08 | | | | | | | | |
| | 2-Wire Voice Unbundled Louisiana Business Dialing Plan without Caller ID | | | UEPBX | UEPWH | 1.36 | 38.85 | 19.08 | | | | | | | | |
| | 2-Wire voice unbundled Louisiana Business Area Calling Port without Caller ID Capability | | | UEPBX | UEPBA | 1.36 | 38.85 | 19.08 | | | | | | | | |

| UNBUNDLED NETWORK ELEMENTS - Louisiana | | | | | | | | | | | | | Attachment: 2 | | Exhibit: A | |
|---|---|---|---|---|---|---|---|---|---|---|---|---|---|---|---|---|
| CATEGORY | RATE ELEMENTS | Interim | Zone | BCS | USOC | RATES ($) | | | | | Svc Order Submitted Elec per LSR | Svc Order Submitted Manually per LSR | Incremental Charge - Manual Svc Order vs. Electronic-1st | Incremental Charge - Manual Svc Order vs. Electronic-Add'l | Incremental Charge - Manual Svc Order vs. Electronic-Disc 1st | Incremental Charge - Manual Svc Order vs. Electronic-Disc Add'l |
| | | | | | | Rec | Nonrecurring | | Nonrecurring Disconnect | | OSS Rates ($) | | | | | |
| | | | | | | | First | Add'l | First | Add'l | SOMEC | SOMAN | SOMAN | SOMAN | SOMAN | SOMAN |
| | 2-Wire voice unbundled Incoming Only Port without Caller ID Capability | | | UEPBX | UEPBE | 1.36 | 38.85 | 19.08 | | | | | | | | |
| | **LOCAL NUMBER PORTABILITY** | | | | | | | | | | | | | | | |
| | Local Number Portability (1 per port) | | | UEPBX | LNPCX | 0.35 | | | | | | | | | | |
| | **FEATURES** | | | | | | | | | | | | | | | |
| | All Features Offered | | | UEPBX | UEPVF | 0.00 | 0.00 | 0.00 | | | | | | | | |
| | **NONRECURRING CHARGES (NRCs) - CURRENTLY COMBINED** | | | | | | | | | | | | | | | |
| | 2-Wire Voice Grade Loop / Line Port Combination - Conversion - Switch-as-is | | | UEPBX | USAC2 | | 0.10 | 0.10 | | | | | | | | |
| | 2-Wire Voice Grade Loop / Line Port Combination - Conversion - Switch with change | | | UEPBX | USACC | | 0.10 | 0.10 | | | | | | | | |
| | **ADDITIONAL NRCs** | | | | | | | | | | | | | | | |
| | 2-Wire Voice Grade Loop/Line Port Combination - Subsequent Activity | | | UEPBX | USAS2 | | 0.00 | 0.00 | | | | | | | | |
| | Unbundled Miscellaneous Rate Element, Tag Loop at End User Premise | | | UEPBX | URETL | | 8.33 | 0.83 | | | | | | | | |
| | **OFF/ON PREMISES EXTENSION CHANNELS** | | | | | | | | | | | | | | | |
| | 2 Wire Analog Voice Grade Extension Loop – Non-Design | | 1 | UEPBX | UEAEN | 12.90 | 36.54 | 16.87 | | | | | | | | |
| | 2 Wire Analog Voice Grade Extension Loop – Non-Design | | 2 | UEPBX | UEAEN | 23.33 | 36.54 | 16.87 | | | | | | | | |
| | 2 Wire Analog Voice Grade Extension Loop – Non-Design | | 3 | UEPBX | UEAEN | 48.43 | 36.54 | 16.87 | | | | | | | | |
| | 2 Wire Analog Voice Grade Extension Loop – Design | | 1 | UEPBX | UEAED | 14.93 | 102.10 | 65.72 | | | | | | | | |
| | 2 Wire Analog Voice Grade Extension Loop – Design | | 2 | UEPBX | UEAED | 25.35 | 102.10 | 65.72 | | | | | | | | |
| | 2 Wire Analog Voice Grade Extension Loop – Design | | 3 | UEPBX | UEAED | 50.46 | 102.10 | 65.72 | | | | | | | | |
| | **INTEROFFICE TRANSPORT** | | | | | | | | | | | | | | | |
| | Interoffice Transport - Dedicated - 2 Wire Voice Grade - Facility Termination | | | UEPBX | U1TV2 | 22.60 | 39.36 | 26.62 | | | | | | | | |
| | Interoffice Transport - Dedicated - 2 Wire Voice Grade - Per Mile or Fraction Mile | | | UEPBX | U1TVM | 0.013 | 0.00 | 0.00 | | | | | | | | |
| | **2-WIRE VOICE GRADE LOOP WITH 2-WIRE LINE PORT (RES - PBX)** | | | | | | | | | | | | | | | |
| | **UNE Port/Loop Combination Rates** | | | | | | | | | | | | | | | |
| | 2-Wire VG Loop/Port Combo - Zone 1 | | 1 | | | 13.13 | | | | | | | | | | |
| | 2-Wire VG Loop/Port Combo - Zone 2 | | 2 | | | 23.75 | | | | | | | | | | |
| | 2-Wire VG Loop/Port Combo - Zone 3 | | 3 | | | 49.62 | | | | | | | | | | |
| | **UNE Loop Rates** | | | | | | | | | | | | | | | |
| | 2-Wire Voice Grade Loop (SL 1) - Zone 1 | | 1 | UEPRG | UEPLX | 11.77 | | | | | | | | | | |
| | 2-Wire Voice Grade Loop (SL 1) - Zone 2 | | 2 | UEPRG | UEPLX | 22.39 | | | | | | | | | | |
| | 2-Wire Voice Grade Loop (SL 1) - Zone 3 | | 3 | UEPRG | UEPLX | 48.26 | | | | | | | | | | |
| | **2-Wire Voice Grade Line Port Rates (RES - PBX)** | | | | | | | | | | | | | | | |
| | 2-Wire VG Unbundled Combination 2-Way PBX Trunk Port - Res | | | UEPRG | UEPRD | 1.36 | 66.91 | 31.29 | | | | | | | | |
| | **LOCAL NUMBER PORTABILITY** | | | | | | | | | | | | | | | |
| | Local Number Portability (1 per port) | | | UEPRG | LNPCP | 3.15 | 0.00 | 0.00 | | | | | | | | |
| | **FEATURES** | | | | | | | | | | | | | | | |
| | All Features Offered | | | UEPRG | UEPVF | 0.00 | 0.00 | 0.00 | | | | | | | | |
| | **NONRECURRING CHARGES (NRCs) - CURRENTLY COMBINED** | | | | | | | | | | | | | | | |
| | 2-Wire Voice Grade Loop/ Line Port Combination (PBX) - Conversion - Switch-As-Is | | | UEPRG | USAC2 | | 7.68 | 1.85 | | | | | | | | |
| | 2-Wire Voice Grade Loop/ Line Port Combination (PBX) - Conversion - Switch with Change | | | UEPRG | USACC | | 7.68 | 1.85 | | | | | | | | |
| | **ADDITIONAL NRCs** | | | | | | | | | | | | | | | |
| | 2-Wire Voice Grade Loop/ Line Port Combination (PBX) - Subsequent Activity | | | UEPRG | USAS2 | 0.00 | 0.00 | 0.00 | | | | | | | | |
| | PBX Subsequent Activity - Change/Rearrange Multiline Hunt Group | | | | | | 7.11 | 7.11 | | | | | | | | |
| | Unbundled Miscellaneous Rate Element, Tag Loop at End User Premise | | | UEPRG | URETL | | 8.33 | 0.83 | | | | | | | | |
| | **OFF/ON PREMISES EXTENSION CHANNELS** | | | | | | | | | | | | | | | |
| | Local Channel Voice grade, per termination | | 1 | UEPRG | P2JHX | 14.93 | 102.10 | 65.72 | | | | | | | | |
| | Local Channel Voice grade, per termination | | 2 | UEPRG | P2JHX | 25.35 | 102.10 | 65.72 | | | | | | | | |

| UNBUNDLED NETWORK ELEMENTS - Louisiana | | | | | | | | | | | | | | Attachment: 2 | | Exhibit: A | |
|---|---|---|---|---|---|---|---|---|---|---|---|---|---|---|---|---|---|
| CATEGORY | RATE ELEMENTS | Interim | Zone | BCS | USOC | RATES ($) | | | | | Svc Order Submitted Elec per LSR | Svc Order Submitted Manually per LSR | Incremental Charge - Manual Svc Order vs. Electronic-1st | Incremental Charge - Manual Svc Order vs. Electronic-Add'l | Incremental Charge - Manual Svc Order vs. Electronic-Disc 1st | Incremental Charge - Manual Svc Order vs. Electronic-Disc Add'l |
| | | | | | | Rec | Nonrecurring | | Nonrecurring Disconnect | | OSS Rates ($) | | | | | |
| | | | | | | | First | Add'l | First | Add'l | SOMEC | SOMAN | SOMAN | SOMAN | SOMAN | SOMAN |
| | Local Channel Voice grade, per termination | | 3 | UEPRG | P2JHX | 50.46 | 102.10 | 65.72 | | | | | | | | |
| INTEROFFICE TRANSPORT | | | | | | | | | | | | | | | | |
| | Interoffice Transport - Dedicated - 2 Wire Voice Grade - Facility Termination | | | UEPRG | U1TV2 | 22.60 | 39.36 | 26.62 | | | | | | | | |
| | Interoffice Transport - Dedicated - 2 Wire Voice Grade - Per Mile or Fraction Mile | | | UEPRG | U1TVM | 0.013 | 0.00 | 0.00 | | | | | | | | |
| 2-WIRE VOICE GRADE LOOP WITH 2-WIRE LINE PORT (BUS - PBX) | | | | | | | | | | | | | | | | |
| UNE Port/Loop Combination Rates | | | | | | | | | | | | | | | | |
| | 2-Wire VG Loop/Port Combo - Zone 1 | | 1 | | | 13.13 | | | | | | | | | | |
| | 2-Wire VG Loop/Port Combo - Zone 2 | | 2 | | | 23.75 | | | | | | | | | | |
| | 2-Wire VG Loop/Port Combo - Zone 3 | | 3 | | | 49.62 | | | | | | | | | | |
| UNE Loop Rates | | | | | | | | | | | | | | | | |
| | 2-Wire Voice Grade Loop (SL 1) - Zone 1 | | 1 | UEPPX | UEPLX | 11.77 | | | | | | | | | | |
| | 2-Wire Voice Grade Loop (SL 1) - Zone 2 | | 2 | UEPPX | UEPLX | 22.39 | | | | | | | | | | |
| | 2-Wire Voice Grade Loop (SL 1) - Zone 3 | | 3 | UEPPX | UEPLX | 48.26 | | | | | | | | | | |
| 2-Wire Voice Grade Line Port Rates (BUS - PBX) | | | | | | | | | | | | | | | | |
| | Line Side Unbundled Combination 2-Way PBX Trunk Port - Bus | | | UEPPX | UEPPC | 1.36 | 66.91 | 31.29 | | | | | | | | |
| | Line Side Unbundled Outward PBX Trunk Port - Bus | | | UEPPX | UEPPO | 1.36 | 66.91 | 31.29 | | | | | | | | |
| | Line Side Unbundled Incoming PBX Trunk Port - Bus | | | UEPPX | UEPP1 | 1.36 | 66.91 | 31.29 | | | | | | | | |
| | 2-Wire Voice Unbundled 2-Way Combination PBX Louisiana Calling Port | | | UEPPX | UEPL2 | 1.36 | 66.91 | 31.29 | | | | | | | | |
| | 2-Wire Voice Unbundled PBX LD Terminal Ports | | | UEPPX | UEPLD | 1.36 | 66.91 | 31.29 | | | | | | | | |
| | 2-Wire Voice Unbundled 2-Way Combination PBX Usage Port | | | UEPPX | UEPXA | 1.36 | 66.91 | 31.29 | | | | | | | | |
| | 2-Wire Voice Unbundled PBX Toll Terminal Hotel Ports | | | UEPPX | UEPXB | 1.36 | 66.91 | 31.29 | | | | | | | | |
| | 2-Wire Voice Unbundled PBX LD DDD Terminals Port | | | UEPPX | UEPXC | 1.36 | 66.91 | 31.29 | | | | | | | | |
| | 2-Wire Voice Unbundled PBX LD Terminal Switchboard Port | | | UEPPX | UEPXD | 1.36 | 66.91 | 31.29 | | | | | | | | |
| | 2-Wire Voice Unbundled PBX LD Terminal Switchboard IDD Capable Port | | | UEPPX | UEPXE | 1.36 | 66.91 | 31.29 | | | | | | | | |
| | 2-Wire Voice Unbundled 2-Way PBX Louisiana Local Optional Calling Port | | | UEPPX | UEPXK | 1.36 | 66.91 | 31.29 | | | | | | | | |
| | 2-Wire Voice Unbundled 2-Way PBX Hotel/Hospital Economy Administrative Calling Port | | | UEPPX | UEPXL | 1.36 | 66.91 | 31.29 | | | | | | | | |
| | 2-Wire Voice Unbundled 2-Way PBX Hotel/Hospital Economy Room Calling Port | | | UEPPX | UEPXM | 1.36 | 66.91 | 31.29 | | | | | | | | |
| | 2-Wire Voice Unbundled 1-Way Outgoing PBX Hotel/Hospital Discount Room Calling Port | | | UEPPX | UEPXO | 1.36 | 66.91 | 31.29 | | | | | | | | |
| | 2-Wire Voice Unbundled 1-Way Outgoing PBX Louisiana Local Discount Calling Port | | | UEPPX | UEPXP | 1.36 | 66.91 | 31.29 | | | | | | | | |
| | 2-Wire Voice Unbundled 1-Way Outgoing PBX Measured Port | | | UEPPX | UEPXS | 1.36 | 66.91 | 31.29 | | | | | | | | |
| LOCAL NUMBER PORTABILITY | | | | | | | | | | | | | | | | |
| | Local Number Portability (1 per port) | | | UEPPX | LNPCP | 3.15 | 0.00 | 0.00 | | | | | | | | |
| FEATURES | | | | | | | | | | | | | | | | |
| | All Features Offered | | | UEPPX | UEPVF | 0.00 | 0.00 | 0.00 | | | | | | | | |
| NONRECURRING CHARGES (NRCs) - CURRENTLY COMBINED | | | | | | | | | | | | | | | | |
| | 2-Wire Voice Grade Loop/ Line Port Combination (PBX) - Conversion - Switch-As-Is | | | UEPPX | USAC2 | | 7.68 | 1.85 | | | | | | | | |
| | 2-Wire Voice Grade Loop/ Line Port Combination (PBX) - Conversion - Switch with Change | | | UEPPX | USACC | | 7.68 | 1.85 | | | | | | | | |
| ADDITIONAL NRCs | | | | | | | | | | | | | | | | |
| | 2-Wire Voice Grade Loop/ Line Port Combination (PBX) - Subsequent Activity | | | UEPPX | USAS2 | 0.00 | 0.00 | 0.00 | | | | | | | | |
| | PBX Subsequent Activity - Change/Rearrange Multiline Hunt Group | | | | | | 7.11 | 7.11 | | | | | | | | |
| | Unbundled Miscellaneous Rate Element, Tag Loop at End User Premise | | | UEPPX | URETL | | 8.33 | 0.83 | | | | | | | | |
| OFF/ON PREMISES EXTENSION CHANNELS | | | | | | | | | | | | | | | | |
| | Local Channel Voice grade, per termination | | 1 | UEPPX | P2JHX | 14.93 | 102.10 | 65.72 | | | | | | | | |
| | Local Channel Voice grade, per termination | | 2 | UEPPX | P2JHX | 25.35 | 102.10 | 65.72 | | | | | | | | |

## UNBUNDLED NETWORK ELEMENTS - Louisiana

| CATEGORY | RATE ELEMENTS | Interim | Zone | BCS | USOC | RATES ($) | | | | | Svc Order Submitted Elec per LSR | Svc Order Submitted Manually per LSR | Attachment: 2 Incremental Charge - Manual Svc Order vs. Electronic-1st | Attachment: 2 Incremental Charge - Manual Svc Order vs. Electronic-Add'l | Exhibit: A Incremental Charge - Manual Svc Order vs. Electronic-Disc 1st | Exhibit: A Incremental Charge - Manual Svc Order vs. Electronic-Disc Add'l |
|---|---|---|---|---|---|---|---|---|---|---|---|---|---|---|---|---|
| | | | | | | Rec | Nonrecurring | | Nonrecurring Disconnect | | OSS Rates ($) | | | | | |
| | | | | | | | First | Add'l | First | Add'l | SOMEC | SOMAN | SOMAN | SOMAN | SOMAN | SOMAN |
| | Local Channel Voice grade, per termination | | 3 | UEPPX | P2JHX | 50.46 | 102.10 | 65.72 | | | | | | | | |
| | **INTEROFFICE TRANSPORT** | | | | | | | | | | | | | | | |
| | Interoffice Transport - Dedicated - 2 Wire Voice Grade - Facility Termination | | | UEPPX | U1TV2 | 22.60 | 39.36 | 26.62 | | | | | | | | |
| | Interoffice Transport - Dedicated - 2 Wire Voice Grade - Per Mile or Fraction Mile | | | UEPPX | U1TVM | 0.013 | 0.00 | 0.00 | | | | | | | | |
| | **2-WIRE VOICE GRADE LOOP WITH 2-WIRE ANALOG LINE COIN PORT** | | | | | | | | | | | | | | | |
| | **UNE Port/Loop Combination Rates** | | | | | | | | | | | | | | | |
| | 2-Wire VG Coin Port/Loop Combo – Zone 1 | | 1 | | | 13.13 | | | | | | | | | | |
| | 2-Wire VG Coin Port/Loop Combo – Zone 2 | | 2 | | | 23.75 | | | | | | | | | | |
| | 2-Wire VG Coin Port/Loop Combo – Zone 3 | | 3 | | | 49.62 | | | | | | | | | | |
| | **UNE Loop Rates** | | | | | | | | | | | | | | | |
| | 2-Wire Voice Grade Loop (SL1) - Zone 1 | | 1 | UEPCO | UEPLX | 11.77 | | | | | | | | | | |
| | 2-Wire Voice Grade Loop (SL1) - Zone 2 | | 2 | UEPCO | UEPLX | 22.39 | | | | | | | | | | |
| | 2-Wire Voice Grade Loop (SL1) - Zone 3 | | 3 | UEPCO | UEPLX | 48.26 | | | | | | | | | | |
| | **2-Wire Voice Grade Line Ports (COIN)** | | | | | | | | | | | | | | | |
| | 2-Wire Coin 2-Way without Operator Screening and without Blocking (AL, KY, LA, MS) | | | UEPCO | UEPRF | 1.36 | 38.85 | 19.08 | | | | | | | | |
| | 2-Wire Coin 2-Way with Operator Screening and Blocking: 011, 900/976, 1+DDD (AL, KY, LA, MS) | | | UEPCO | UEPRA | 1.36 | 38.85 | 19.08 | | | | | | | | |
| | 2-Wire Coin 2-Way with Operator Screening and 011 Blocking (AL, LA, MS) | | | UEPCO | UEPRB | 1.36 | 38.85 | 19.08 | | | | | | | | |
| | 2-Wire Coin 2-Way with Operator Screening & Blocking: 900/976, 1+DDD, 011+, & Local (AL, KY, LA, MS) | | | UEPCO | UEPCD | 1.36 | 38.85 | 19.08 | | | | | | | | |
| | 2-Wire Coin Outward without Blocking and without Operator Screening (KY, LA, MS) | | | UEPCO | UEPRN | 1.36 | 38.85 | 19.08 | | | | | | | | |
| | 2-Wire Coin Outward with Operator Screening and 011 Blocking (LA) | | | UEPCO | UEPLA | 1.36 | 38.85 | 19.08 | | | | | | | | |
| | 2-Wire Coin Outward with Operator Screening and Blocking: 011, 900/976, 1+DDD (AL, KY, LA, MS) | | | UEPCO | UEPRH | 1.36 | 38.85 | 19.08 | | | | | | | | |
| | 2-Wire Coin Outward Operator Screening & Blocking: 900/976, 1+DDD, 011+, and Local (AL, KY, LA, MS) | | | UEPCO | UEPCN | 1.36 | 38.85 | 19.08 | | | | | | | | |
| | 2-Wire Coin 2-Way Smartline with 900/976 (Louisiana only) | | | UEPCO | UEPNA | 1.36 | 38.85 | 19.08 | | | | | | | | |
| | 2-Wire Coin Outward Smartline with 900/976 (Louisiana only) | | | UEPCO | UEPCB | 1.36 | 38.85 | 19.08 | | | | | | | | |
| | **ADDITIONAL UNE COIN PORT/LOOP (RC)** | | | | | | | | | | | | | | | |
| | UNE Coin Port/Loop Combo Usage (Flat Rate) | | | UEPCO | URECU | 1.81 | 0.00 | 0.00 | 0.00 | 0.00 | | | | | | |
| | **LOCAL NUMBER PORTABILITY** | | | | | | | | | | | | | | | |
| | Local Number Portability (1 per port) | | | UEPCO | LNPCX | 0.35 | | | | | | | | | | |
| | **NONRECURRING CHARGES - CURRENTLY COMBINED** | | | | | | | | | | | | | | | |
| | 2-Wire Voice Grade Loop / Line Port Combination - Conversion - Switch-as-is | | | UEPCO | USAC2 | | 0.10 | 0.10 | | | | | | | | |
| | 2-Wire Voice Grade Loop / Line Port Combination - Conversion - Switch with change | | | UEPCO | USACC | | 0.10 | 0.10 | | | | | | | | |
| | **ADDITIONAL NRCs** | | | | | | | | | | | | | | | |
| | 2-Wire Voice Grade Loop/Line Port Combination - Subsequent Activity | | | UEPCO | USAS2 | | 0.00 | 0.00 | | | | | | | | |
| | Unbundled Miscellaneous Rate Element, Tag Loop at End User Premise | | | UEPCO | URETL | | 8.33 | 0.83 | | | | | | | | |
| | **2-WIRE VOICE LOOP/ 2WIRE VOICE GRADE IO TRANSPORT/ 2-WIRE LINE PORT (RES)** | | | | | | | | | | | | | | | |
| | **UNE Port/Loop Combination Rates** | | | | | | | | | | | | | | | |
| | 2-Wire VG Loop/IO Tranport/Port Combo - Zone 1 | | 1 | | | 16.45 | | | | | | | | | | |
| | 2-Wire VG Loop/IO Tranport/Port Combo - Zone 2 | | 2 | | | 26.87 | | | | | | | | | | |
| | 2-Wire VG Loop/IO Tranport/Port Combo - Zone 3 | | 3 | | | 51.98 | | | | | | | | | | |
| | **UNE Loop Rates** | | | | | | | | | | | | | | | |
| | 2-Wire Voice Grade Loop (SL2) - Zone 1 | | 1 | UEPFR | UECF2 | 14.93 | | | | | | | | | | |
| | 2-Wire Voice Grade Loop (SL2) - Zone 2 | | 2 | UEPFR | UECF2 | 25.35 | | | | | | | | | | |
| | 2-Wire Voice Grade Loop (SL2) - Zone 3 | | 3 | UEPFR | UECF2 | 50.46 | | | | | | | | | | |
| | **2-Wire Voice Grade Line Port Rates (Res)** | | | | | | | | | | | | | | | |
| | 2-Wire voice unbundled port - residence | | | UEPFR | UEPRL | 1.52 | 104.41 | 67.93 | | | | | | | | |

## UNBUNDLED NETWORK ELEMENTS - Louisiana

| CATEGORY | RATE ELEMENTS | Interim | Zone | BCS | USOC | RATES ($) | | | | | Svc Order Submitted Elec per LSR | Svc Order Submitted Manually per LSR | Attachment: 2 Incremental Charge - Manual Svc Order vs. Electronic-1st | Attachment: 2 Incremental Charge - Manual Svc Order vs. Electronic-Add'l | Exhibit: A Incremental Charge - Manual Svc Order vs. Electronic-Disc 1st | Exhibit: A Incremental Charge - Manual Svc Order vs. Electronic-Disc Add'l |
|---|---|---|---|---|---|---|---|---|---|---|---|---|---|---|---|---|
| | | | | | | Rec | Nonrecurring | | Nonrecurring Disconnect | | OSS Rates ($) | | | | | |
| | | | | | | | First | Add'l | First | Add'l | SOMEC | SOMAN | SOMAN | SOMAN | SOMAN | SOMAN |
| | 2-Wire voice unbundled port with Caller ID - res | | | UEPFR | UEPRC | 1.52 | 104.41 | 67.93 | | | | | | | | |
| | 2-Wire voice unbundled port outgoing only - res | | | UEPFR | UEPRO | 1.52 | 104.41 | 67.93 | | | | | | | | |
| | 2-Wire voice Grade unbundled Louisiana extended local dialing parity port with Caller ID - res | | | UEPFR | UEPAS | 1.52 | 104.41 | 67.93 | | | | | | | | |
| | 2-Wire voice unbundled Louisiana Area Plus with Caller ID - res (RUL) | | | UEPFR | UEPAG | 1.52 | 104.41 | 67.93 | | | | | | | | |
| | 2-Wire voice unbundles res, low usage line port with Caller ID (LUM) | | | UEPFR | UEPAP | 1.52 | 104.41 | 67.93 | | | | | | | | |
| | 2-Wire Voice Unbundled Louisiana Residence Dialing Plan without Caller ID | | | UEPFR | UEPWG | 1.52 | 104.41 | 67.93 | | | | | | | | |
| | **INTEROFFICE TRANSPORT** | | | | | | | | | | | | | | | |
| | Interoffice Transport - Dedicated - 2 Wire Voice Grade - Facility Termination | | | UEPFR | U1TV2 | 22.60 | 39.36 | 26.62 | | | | | | | | |
| | Interoffice Transport - Dedicated - 2 Wire Voice Grade - Per Mile or Fraction Mile | | | UEPFR | 1L5XX | 0.013 | | | | | | | | | | |
| | **FEATURES** | | | | | | | | | | | | | | | |
| | All Features Offered | | | UEPFR | UEPVF | 0.00 | 0.00 | 0.00 | | | | | | | | |
| | **LOCAL NUMBER PORTABILITY** | | | | | | | | | | | | | | | |
| | Local Number Portability (1 per port) | | | UEPFR | LNPCX | 0.35 | | | | | | | | | | |
| | **NONRECURRING CHARGES (NRCs) - CURRENTLY COMBINED** | | | | | | | | | | | | | | | |
| | 2-Wire Loop / Dedicated IO Transport / 2 Wire Line Port Combination - Conversion - Switch-as-is | | | UEPFR | USAC2 | | 8.24 | 1.81 | | | | | | | | |
| | 2-Wire Loop / Dedicated IO Transport / 2 Wire Line Port Combination - Conversion - Switch-With-Change | | | UEPFR | USACC | | 8.24 | 1.81 | | | | | | | | |
| | Unbundled Miscellaneous Rate Element, Tag Designed Loop at End User Premise | | | UEPFR | URETN | | 11.20 | 1.10 | | | | | | | | |
| | **2-WIRE VOICE LOOP/ 2WIRE VOICE GRADE IO TRANSPORT/ 2-WIRE LINE PORT (BUS)** | | | | | | | | | | | | | | | |
| | **UNE Port/Loop Combination Rates** | | | | | | | | | | | | | | | |
| | 2-Wire VG Loop/IO Tranport/Port Combo - Zone 1 | | 1 | | | 16.45 | | | | | | | | | | |
| | 2-Wire VG Loop/IO Tranport/Port Combo - Zone 2 | | 2 | | | 26.87 | | | | | | | | | | |
| | 2-Wire VG Loop/IO Tranport/Port Combo - Zone 3 | | 3 | | | 51.98 | | | | | | | | | | |
| | **UNE Loop Rates** | | | | | | | | | | | | | | | |
| | 2-Wire Voice Grade Loop (SL2) - Zone 1 | | 1 | UEPFB | UECF2 | 14.93 | | | | | | | | | | |
| | 2-Wire Voice Grade Loop (SL2) - Zone 2 | | 2 | UEPFB | UECF2 | 25.35 | | | | | | | | | | |
| | 2-Wire Voice Grade Loop (SL2) - Zone 3 | | 3 | UEPFB | UECF2 | 50.46 | | | | | | | | | | |
| | **2-Wire Voice Grade Line Port (Bus)** | | | | | | | | | | | | | | | |
| | 2-Wire voice unbundled port without Caller ID - bus | | | UEPFB | UEPBL | 1.52 | 104.41 | 67.93 | | | | | | | | |
| | 2-Wire voice unbundled port with Caller + E484 ID - bus | | | UEPFB | UEPBC | 1.52 | 104.41 | 67.93 | | | | | | | | |
| | 2-Wire voice unbundled port outgoing only - bus | | | UEPFB | UEPBO | 1.52 | 104.41 | 67.93 | | | | | | | | |
| | 2-Wire voice Grade unbundled Alabama extended local dialing parity port with Caller ID - bus | | | UEPFB | UEPAW | | | | | | | | | | | |
| | 2-Wire voice Grade unbundled Louisiana extended local dialing parity port with Caller ID - bus | | | UEPFB | UEPAX | 1.52 | 104.41 | 67.93 | | | | | | | | |
| | 2-Wire voice unbundled incoming only port with Caller ID - Bus | | | UEPFB | UEPB1 | 1.52 | 104.41 | 67.93 | | | | | | | | |
| | 2-Wire voice unbundled Louisiana Bus Area Calling Port with Caller ID (BUC) | | | UEPFB | UEPAA | 1.52 | 104.41 | 67.93 | | | | | | | | |
| | 2-Wire Voice Unbundled Louisiana Business Dialing Plan without Caller ID | | | UEPFB | UEPWH | 1.52 | 104.41 | 67.93 | | | | | | | | |
| | **LOCAL NUMBER PORTABILITY** | | | | | | | | | | | | | | | |
| | Local Number Portability (1 per port) | | | UEPFB | LNPCX | 0.35 | | | | | | | | | | |
| | **INTEROFFICE TRANSPORT** | | | | | | | | | | | | | | | |
| | Interoffice Transport - Dedicated - 2 Wire Voice Grade - Facility Termination | | | UEPFB | U1TV2 | 22.60 | 39.36 | 26.62 | | | | | | | | |
| | Interoffice Transport - Dedicated - 2 Wire Voice Grade - Per Mile or Fraction Mile | | | UEPFB | 1L5XX | 0.013 | | | | | | | | | | |
| | **FEATURES** | | | | | | | | | | | | | | | |
| | All Features Offered | | | UEPFB | UEPVF | 0.00 | 0.00 | 0.00 | | | | | | | | |
| | **NONRECURRING CHARGES (NRCs) - CURRENTLY COMBINED** | | | | | | | | | | | | | | | |

| UNBUNDLED NETWORK ELEMENTS - Louisiana | | | | | | | | | | | | | | Attachment: 2 | | Exhibit: A | |
|---|---|---|---|---|---|---|---|---|---|---|---|---|---|---|---|---|---|
| CATEGORY | RATE ELEMENTS | Interim | Zone | BCS | USOC | RATES ($) | | | | | Svc Order Submitted Elec per LSR | Svc Order Submitted Manually per LSR | Incremental Charge - Manual Svc Order vs. Electronic-1st | Incremental Charge - Manual Svc Order vs. Electronic-Add'l | Incremental Charge - Manual Svc Order vs. Electronic-Disc 1st | Incremental Charge - Manual Svc Order vs. Electronic-Disc Add'l |
| | | | | | | Rec | Nonrecurring | | Nonrecurring Disconnect | | OSS Rates ($) | | | | | |
| | | | | | | | First | Add'l | First | Add'l | SOMEC | SOMAN | SOMAN | SOMAN | SOMAN | SOMAN |
| | 2-Wire Loop / Dedicated IO Transport / 2 Wire Line Port Combination - Conversion - Switch-as-is | | | UEPFB | USAC2 | | 8.24 | 1.81 | | | | | | | | |
| | 2-Wire Loop / Dedicated IO Transport / 2 Wire Line Port Combination - Conversion - Switch with change | | | UEPFB | USACC | | 8.24 | 1.81 | | | | | | | | |
| | Unbundled Miscellaneous Rate Element, Tag Designed Loop at End User Premise | | | UEPFB | URETN | | 11.20 | 1.10 | | | | | | | | |
| **2-WIRE VOICE LOOP/ 2WIRE VOICE GRADE IO TRANSPORT/ 2-WIRE LINE PORT (PBX)** | | | | | | | | | | | | | | | | |
| **UNE Port/Loop Combination Rates** | | | | | | | | | | | | | | | | |
| | 2-Wire VG Loop/IO Tranport/Port Combo - Zone 1 | | 1 | | | 16.45 | | | | | | | | | | |
| | 2-Wire VG Loop/IO Tranport/Port Combo - Zone 2 | | 2 | | | 26.87 | | | | | | | | | | |
| | 2-Wire VG Loop/IO Tranport/Port Combo - Zone 3 | | 3 | | | 51.98 | | | | | | | | | | |
| **UNE Loop Rates** | | | | | | | | | | | | | | | | |
| | 2-Wire Voice Grade Loop (SL2) - Zone 1 | | 1 | UEPFP | UECF2 | 14.93 | | | | | | | | | | |
| | 2-Wire Voice Grade Loop (SL2) - Zone 2 | | 2 | UEPFP | UECF2 | 25.35 | | | | | | | | | | |
| | 2-Wire Voice Grade Loop (SL2) - Zone 3 | | 3 | UEPFP | UECF2 | 50.46 | | | | | | | | | | |
| **2-Wire Voice Grade Line Port Rates (BUS - PBX)** | | | | | | | | | | | | | | | | |
| | Line Side Unbundled Combination 2-Way PBX Trunk Port - Bus | | | UEPFP | UEPPC | 1.52 | 132.47 | 82.14 | | | | | | | | |
| | Line Side Unbundled Outward PBX Trunk Port - Bus | | | UEPFP | UEPPO | 1.52 | 132.47 | 82.14 | | | | | | | | |
| | Line Side Unbundled Incoming PBX Trunk Port - Bus | | | UEPFP | UEPP1 | 1.52 | 132.47 | 82.14 | | | | | | | | |
| | 2-Wire Voice Unbundled 2-Way Combination PBX Louisiana Calling Port | | | UEPFP | UEPL2 | 1.52 | 132.47 | 82.14 | | | | | | | | |
| | 2-Wire Voice Unbundled PBX LD Terminal Ports | | | UEPFP | UEPLD | 1.52 | 132.47 | 82.14 | | | | | | | | |
| | 2-Wire Voice Unbundled 2-Way Combination PBX Usage Port | | | UEPFP | UEPXA | 1.52 | 132.47 | 82.14 | | | | | | | | |
| | 2-Wire Voice Unbundled PBX Toll Terminal Hotel Ports | | | UEPFP | UEPXB | 1.52 | 132.47 | 82.14 | | | | | | | | |
| | 2-Wire Voice Unbundled PBX LD DDD Terminals Port | | | UEPFP | UEPXC | 1.52 | 132.47 | 82.14 | | | | | | | | |
| | 2-Wire Voice Unbundled PBX LD Terminal Switchboard Port | | | UEPFP | UEPXD | 1.52 | 132.47 | 82.14 | | | | | | | | |
| | 2-Wire Voice Unbundled PBX LD Terminal Switchboard IDD Capable Port | | | UEPFP | UEPXE | 1.52 | 132.47 | 82.14 | | | | | | | | |
| | 2-Wire Voice Unbundled 2-Way PBX Louisiana Local Optional Calling Port | | | UEPFP | UEPXK | 1.52 | 132.47 | 82.14 | | | | | | | | |
| | 2-Wire Voice Unbundled 2-Way PBX Hotel/Hospital Economy Administrative Calling Port | | | UEPFP | UEPXL | 1.52 | 132.47 | 82.14 | | | | | | | | |
| | 2-Wire Voice Unbundled 2-Way PBX Hotel/Hospital Economy Room Calling Port | | | UEPFP | UEPXM | 1.52 | 132.47 | 82.14 | | | | | | | | |
| | 2-Wire Voice Unbundled 1-Way Outgoing PBX Hotel/Hospital Discount Room Calling Port | | | UEPFP | UEPXO | 1.52 | 132.47 | 82.14 | | | | | | | | |
| | 2-Wire Voice Unbundled 1-Way Outgoing PBX Louisiana Local Discount Calling Port | | | UEPFP | UEPXP | 1.52 | 132.47 | 82.14 | | | | | | | | |
| | 2-Wire Voice Unbundled 1-Way Outgoing PBX Measured Port | | | UEPFP | UEPXS | 1.52 | 132.47 | 82.14 | | | | | | | | |
| **LOCAL NUMBER PORTABILITY** | | | | | | | | | | | | | | | | |
| | Local Number Portability (1 per port) | | | UEPFP | LNPCP | 3.15 | 0.00 | 0.00 | | | | | | | | |
| **INTEROFFICE TRANSPORT** | | | | | | | | | | | | | | | | |
| | Interoffice Transport - Dedicated - 2 Wire Voice Grade - Facility Termination | | | UEPFP | U1TV2 | 22.60 | 39.36 | 26.62 | | | | | | | | |
| | Interoffice Transport - Dedicated - 2 Wire Voice Grade - Per Mile or Fraction Mile | | | UEPFP | 1L5XX | 0.013 | | | | | | | | | | |
| **FEATURES** | | | | | | | | | | | | | | | | |
| | All Features Offered | | | UEPFP | UEPVF | 0.00 | 0.00 | 0.00 | | | | | | | | |
| **NONRECURRING CHARGES (NRCs) - CURRENTLY COMBINED** | | | | | | | | | | | | | | | | |
| | 2-Wire Loop / Dedicated IO Transport / 2 Wire Line Port Combination - Conversion - Switch-as-is | | | UEPFP | USAC2 | | 8.24 | 1.81 | | | | | | | | |
| | 2-Wire Loop / Dedicated IO Transport / 2 Wire Line Port Combination - Conversion - Switch with change | | | UEPFP | USACC | | 8.24 | 1.81 | | | | | | | | |
| | Unbundled Miscellaneous Rate Element, Tag Designed Loop at End User Premise | | | UEPFP | URETN | | 11.20 | 1.10 | | | | | | | | |
| **UNBUNDLED PORT/LOOP COMBINATIONS - COST BASED RATES** | | | | | | | | | | | | | | | | |
| **2-WIRE VOICE GRADE LOOP- BUS ONLY - WITH 2-WIRE DID TRUNK PORT** | | | | | | | | | | | | | | | | |
| **UNE Port/Loop Combination Rates** | | | | | | | | | | | | | | | | |

| UNBUNDLED NETWORK ELEMENTS - Louisiana | | | | | | | | | | | | | | Attachment: 2 | | Exhibit: A | |
|---|---|---|---|---|---|---|---|---|---|---|---|---|---|---|---|---|---|
| CATEGORY | RATE ELEMENTS | Interim | Zone | BCS | USOC | RATES ($) | | | | | Svc Order Submitted Elec per LSR | Svc Order Submitted Manually per LSR | Incremental Charge - Manual Svc Order vs. Electronic-1st | Incremental Charge - Manual Svc Order vs. Electronic-Add'l | Incremental Charge - Manual Svc Order vs. Electronic-Disc 1st | Incremental Charge - Manual Svc Order vs. Electronic-Disc Add'l |
| | | | | | | Rec | Nonrecurring | | Nonrecurring Disconnect | | OSS Rates ($) | | | | | |
| | | | | | | | First | Add'l | First | Add'l | SOMEC | SOMAN | SOMAN | SOMAN | SOMAN | SOMAN |
| | 2-Wire VG Loop/2-Wire DID Trunk Port Combo - UNE Zone 1 | | 1 | | | 23.20 | | | | | | | | | | |
| | 2-Wire VG Loop/2-Wire DID Trunk Port Combo - UNE Zone 2 | | 2 | | | 33.62 | | | | | | | | | | |
| | 2-Wire VG Loop/2-Wire DID Trunk Port Combo - UNE Zone 3 | | 3 | | | 58.73 | | | | | | | | | | |
| **UNE Loop Rates** | | | | | | | | | | | | | | | | |
| | 2-Wire Analog Voice Grade Loop - (SL2) - UNE Zone 1 | | 1 | UEPPX | UECD1 | 14.93 | | | | | | | | | | |
| | 2-Wire Analog Voice Grade Loop - (SL2) - UNE Zone 2 | | 2 | UEPPX | UECD1 | 25.35 | | | | | | | | | | |
| | 2-Wire Analog Voice Grade Loop - (SL2) - UNE Zone 3 | | 3 | UEPPX | UECD1 | 50.46 | | | | | | | | | | |
| **UNE Port Rate** | | | | | | | | | | | | | | | | |
| | Exchange Ports - 2-Wire DID Port | | | UEPPX | UEPD1 | 8.27 | 217.95 | 83.92 | | | | | | | | |
| **NONRECURRING CHARGES - CURRENTLY COMBINED** | | | | | | | | | | | | | | | | |
| | 2-Wire Voice Grade Loop / 2-Wire DID Trunk Port Combination - Switch-as-is | | | UEPPX | USAC1 | | 7.10 | 1.81 | | | | | | | | |
| | 2-Wire Voice Grade Loop / 2-Wire DID Trunk Port Conversion with BellSouth Allowable Changes | | | UEPPX | USA1C | | 7.10 | 1.81 | | | | | | | | |
| **ADDITIONAL NRCs** | | | | | | | | | | | | | | | | |
| | 2-Wire DID Subsequent Activity - Add Trunks, Per Trunk | | | UEPPX | USAS1 | | 26.01 | 26.01 | | | | | | | | |
| | Unbundled Miscellaneous Rate Element, Tag Designed Loop at End User Premise | | | UEPPX | URETN | | 11.20 | 1.10 | | | | | | | | |
| **Telephone Number/Trunk Group Establisment Charges** | | | | | | | | | | | | | | | | |
| | DID Trunk Termination (One Per Port) | | | UEPPX | NDT | 0.00 | 0.00 | 0.00 | | | | | | | | |
| | Additional DID Numbers for each Group of 20 DID Numbers | | | UEPPX | ND4 | 0.00 | 0.00 | 0.00 | | | | | | | | |
| | DID Numbers, Non- consecutive DID Numbers , Per Number | | | UEPPX | ND5 | 0.00 | 0.00 | 0.00 | | | | | | | | |
| | Reserve Non-Consecutive DID numbers | | | UEPPX | ND6 | 0.00 | 0.00 | 0.00 | | | | | | | | |
| | Reserve DID Numbers | | | UEPPX | NDV | 0.00 | 0.00 | 0.00 | | | | | | | | |
| **LOCAL NUMBER PORTABILITY** | | | | | | | | | | | | | | | | |
| | Local Number Portability (1 per port) | | | UEPPX | LNPCP | 3.15 | 0.00 | 0.00 | | | | | | | | |
| **2-WIRE ISDN DIGITAL GRADE LOOP WITH 2-WIRE ISDN DIGITAL LINE SIDE PORT** | | | | | | | | | | | | | | | | |
| **UNE Port/Loop Combination Rates** | | | | | | | | | | | | | | | | |
| | 2W ISDN Digital Grade Loop/2W ISDN Digital Line Side Port - UNE Zone 1 | | 1 | UEPPB UEPPR | | 27.48 | | | | | | | | | | |
| | 2W ISDN Digital Grade Loop/2W ISDN Digital Line Side Port - UNE Zone 2 | | 2 | UEPPB UEPPR | | 40.34 | | | | | | | | | | |
| | 2W ISDN Digital Grade Loop/2W ISDN Digital Line Side Port - UNE Zone 3 | | 3 | UEPPB UEPPR | | 70.99 | | | | | | | | | | |
| **UNE Loop Rates** | | | | | | | | | | | | | | | | |
| | 2-Wire ISDN Digital Grade Loop - UNE Zone 1 | | 1 | UEPPB UEPPR | USL2X | 19.09 | | | | | | | | | | |
| | 2-Wire ISDN Digital Grade Loop - UNE Zone 2 | | 2 | UEPPB UEPPR | USL2X | 31.95 | | | | | | | | | | |
| | 2-Wire ISDN Digital Grade Loop - UNE Zone 3 | | 3 | UEPPB UEPPR | USL2X | 62.60 | | | | | | | | | | |
| **UNE Port Rate** | | | | | | | | | | | | | | | | |
| | Exchange Port - 2-Wire ISDN Line Side Port | | | UEPPB UEPPR | UEPPB | 8.39 | 184.10 | 128.42 | | | | | | | | |
| **NONRECURRING CHARGES - CURRENTLY COMBINED** | | | | | | | | | | | | | | | | |
| | 2-Wire ISDN Digital Grade Loop / 2-Wire ISDN Line Side Port Combination - Conversion | | | UEPPB UEPPR | USACB | 0.00 | 37.40 | 26.23 | | | | | | | | |
| **ADDITIONAL NRCs** | | | | | | | | | | | | | | | | |
| | Unbundled Miscellaneous Rate Element, Tag Designed Loop at End User Premise | | | UEPPB UEPPR | URETN | | 11.20 | 1.10 | | | | | | | | |
| | Unbundled Miscellaneous Rate Element, Tag Loop at End User Premise | | | UEPPB UEPPR | URETL | | 8.33 | 0.83 | | | | | | | | |
| **LOCAL NUMBER PORTABILITY** | | | | | | | | | | | | | | | | |
| | Local Number Portability (1 per port) | | | UEPPB UEPPR | LNPCX | 0.35 | 0.00 | 0.00 | | | | | | | | |
| **B-CHANNEL USER PROFILE ACCESS:** | | | | | | | | | | | | | | | | |
| | CVS/CSD (DMS/5ESS) | | | UEPPB UEPPR | U1UCA | 0.00 | 0.00 | 0.00 | | | | | | | | |
| | CVS (EWSD) | | | UEPPB UEPPR | U1UCB | 0.00 | 0.00 | 0.00 | | | | | | | | |
| | CSD | | | UEPPB UEPPR | U1UCC | 0.00 | 0.00 | 0.00 | | | | | | | | |
| **B-CHANNEL AREA PLUS USER PROFILE ACCESS: (AL,KY,LA,MS SC,MS, & TN)** | | | | | | | | | | | | | | | | |
| | CVS/CSD (DMS/5ESS) | | | UEPPB UEPPR | U1UCD | 0.00 | 0.00 | 0.00 | | | | | | | | |
| | CVS (EWSD) | | | UEPPB UEPPR | U1UCE | 0.00 | 0.00 | 0.00 | | | | | | | | |
| | CSD | | | UEPPB UEPPR | U1UCF | 0.00 | 0.00 | 0.00 | | | | | | | | |

| UNBUNDLED NETWORK ELEMENTS - Louisiana | | | | | | | | | | | | | | Attachment: 2 | | Exhibit: A | |
|---|---|---|---|---|---|---|---|---|---|---|---|---|---|---|---|---|---|
| CATEGORY | RATE ELEMENTS | Interim | Zone | BCS | USOC | RATES ($) | | | | | Svc Order Submitted Elec per LSR | Svc Order Submitted Manually per LSR | Incremental Charge - Manual Svc Order vs. Electronic-1st | Incremental Charge - Manual Svc Order vs. Electronic-Add'l | Incremental Charge - Manual Svc Order vs. Electronic-Disc 1st | Incremental Charge - Manual Svc Order vs. Electronic-Disc Add'l |
| | | | | | | Rec | Nonrecurring | | Nonrecurring Disconnect | | OSS Rates ($) | | | | | |
| | | | | | | | First | Add'l | First | Add'l | SOMEC | SOMAN | SOMAN | SOMAN | SOMAN | SOMAN |
| | **USER TERMINAL PROFILE** | | | | | | | | | | | | | | | |
| | User Terminal Profile (EWSD only) | | | UEPPB UEPPR | U1UMA | 0.00 | 0.00 | 0.00 | | | | | | | | |
| | **VERTICAL FEATURES** | | | | | | | | | | | | | | | |
| | All Vertical Features - One per Channel B User Profile | | | UEPPB UEPPR | UEPVF | 0.00 | 0.00 | 0.00 | | | | | | | | |
| | **INTEROFFICE CHANNEL MILEAGE** | | | | | | | | | | | | | | | |
| | Interoffice Channel mileage each, including first mile and facilities termination | | | UEPPB UEPPR | M1GNC | 22.613 | 39.36 | 26.62 | | | | | | | | |
| | Interoffice Channel mileage each, additional mile | | | UEPPB UEPPR | M1GNM | 0.013 | 0.00 | 0.00 | | | | | | | | |
| | **4-WIRE DS1 DIGITAL LOOP WITH 4-WIRE ISDN DS1 DIGITAL TRUNK PORT** | | | | | | | | | | | | | | | |
| | **The UNE-P DS1 combination rates below for in this rate exhibit apply to the embedded base in place as of 10/2/03 until 4/1/04. After 4/1/04 these rates shall revert to tariff rates or a separate commercial agreement.** | | | | | | | | | | | | | | | |
| | **Requests for 4-Wire DS1 Digital Loop with 4-Wire ISDN DS1 Digital Trunk Port after the effective date of this amendment shall be provided pursuant to a separate agreement or tariff at BellSouth's discretion.** | | | | | | | | | | | | | | | |
| | **UNE Port/Loop Combination Rates** | | | | | | | | | | | | | | | |
| | 4W DS1 Digital Loop/4W ISDN DS1 Digital Trunk Port - UNE Zone 1 | | 1 | UEPPP | | 180.52 | | | | | | | | | | |
| | 4W DS1 Digital Loop/4W ISDN DS1 Digital Trunk Port - UNE Zone 2 | | 2 | UEPPP | | 289.78 | | | | | | | | | | |
| | 4W DS1 Digital Loop/4W ISDN DS1 Digital Trunk Port - UNE Zone 3 | | 3 | UEPPP | | 586.76 | | | | | | | | | | |
| | **UNE Loop Rates** | | | | | | | | | | | | | | | |
| | 4-Wire DS1 Digital Loop - UNE Zone 1 | | 1 | UEPPP | USL4P | 85.70 | | | | | | | | | | |
| | 4-Wire DS1 Digital Loop - UNE Zone 2 | | 2 | UEPPP | USL4P | 194.96 | | | | | | | | | | |
| | 4-Wire DS1 Digital Loop - UNE Zone 3 | | 3 | UEPPP | USL4P | 491.94 | | | | | | | | | | |
| | **UNE Port Rate** | | | | | | | | | | | | | | | |
| | Exchange Ports - 4-Wire ISDN DS1 Port (E:4/1/2004) | | | UEPPP | UEPPP | 94.82 | 443.08 | 251.60 | | | | | | | | |
| | **NONRECURRING CHARGES - CURRENTLY COMBINED** | | | | | | | | | | | | | | | |
| | 4-Wire DS1 Digital Loop / 4-Wire ISDN DS1 Digital Trunk Port Combination - Conversion -Switch-as-is (E:4/1/2004) | | | UEPPP | USACP | 0.00 | 115.63 | 76.29 | | | | | | | | |
| | **ADDITIONAL NRCs** | | | | | | | | | | | | | | | |
| | 4-Wire DS1 Loop/4-W ISDN Digtl Trk Port - Subsqt Actvy-Inward/two way Tel Nos. (except NC) | | | UEPPP | PR7TF | | 0.48 | | | | | | | | | |
| | 4-Wire DS1 Loop / 4-Wire ISDN DS1 Digital Trunk Port - Outward Tel Numbers (All States except NC) | | | UEPPP | PR7TO | | 11.18 | 11.18 | | | | | | | | |
| | 4-Wire DS1 Loop / 4-Wire ISDN DS1 Digital Trk Port - Subsequent Inward Tel Numbers | | | UEPPP | PR7ZT | | 22.35 | 22.35 | | | | | | | | |
| | **LOCAL NUMBER PORTABILITY** | | | | | | | | | | | | | | | |
| | Local Number Portability (1 per port) | | | UEPPP | LNPCN | 1.75 | | | | | | | | | | |
| | **INTERFACE (Provsioning Only)** | | | | | | | | | | | | | | | |
| | Voice/Data | | | UEPPP | PR71V | 0.00 | 0.00 | 0.00 | | | | | | | | |
| | Digital Data | | | UEPPP | PR71D | 0.00 | 0.00 | 0.00 | | | | | | | | |
| | Inward Data | | | UEPPP | PR71E | 0.00 | 0.00 | 0.00 | | | | | | | | |
| | **New or Additional "B" Channel** | | | | | | | | | | | | | | | |
| | New or Additional - Voice/Data B Channel | | | UEPPP | PR7BV | 0.00 | 14.11 | | | | | | | | | |
| | New or Additional - Digital Data B Channel | | | UEPPP | PR7BF | 0.00 | 14.11 | | | | | | | | | |
| | New or Additional Inward Data B Channel | | | UEPPP | PR7BD | 0.00 | 14.11 | | | | | | | | | |
| | **CALL TYPES** | | | | | | | | | | | | | | | |
| | Inward | | | UEPPP | PR7C1 | 0.00 | 0.00 | 0.00 | | | | | | | | |
| | Outward | | | UEPPP | PR7CO | 0.00 | 0.00 | 0.00 | | | | | | | | |
| | Two-way | | | UEPPP | PR7CC | 0.00 | 0.00 | 0.00 | | | | | | | | |
| | **Interoffice Channel Mileage** | | | | | | | | | | | | | | | |
| | Fixed Each Including First Mile | | | UEPPP | 1LN1A | 70.7352 | 86.69 | 79.44 | | | | | | | | |
| | Each Airline-Fractional Additional Mile | | | UEPPP | 1LN1B | 0.2652 | | | | | | | | | | |
| | **4-WIRE DS1 DIGITAL LOOP WITH 4-WIRE DDITS TRUNK PORT** | | | | | | | | | | | | | | | |
| | **The UNE-P DS1 combination rates below for in this rate exhibit apply to the embedded base in place as of 10/2/03 until 4/1/04. After 4/1/04 these rates shall revert to tariff rates or a separate commercial agreement.** | | | | | | | | | | | | | | | |
| | **Requests for 4-Wire DS1 Digital Loop with 4-Wire DDITS after the effective date of this amendment shall be provided pursuant to a separate agreement or tariff at BellSouth's discretion.** | | | | | | | | | | | | | | | |
| | **UNE Port/Loop Combination Rates** | | | | | | | | | | | | | | | |
| | 4W DS1 Digital Loop/4W DDITS Trunk Port - UNE Zone 1 | | 1 | UEPDC | | 154.17 | | | | | | | | | | |
| | 4W DS1 Digital Loop/4W DDITS Trunk Port - UNE Zone 2 | | 2 | UEPDC | | 263.43 | | | | | | | | | | |
| | 4W DS1 Digital Loop/4W DDITS Trunk Port - UNE Zone 3 | | 3 | UEPDC | | 560.41 | | | | | | | | | | |
| | **UNE Loop Rates** | | | | | | | | | | | | | | | |

| UNBUNDLED NETWORK ELEMENTS - Louisiana | | | | | | | | | | | | | | Attachment: 2 | | Exhibit: A | |
|---|---|---|---|---|---|---|---|---|---|---|---|---|---|---|---|---|---|
| CATEGORY | RATE ELEMENTS | Interim | Zone | BCS | USOC | RATES ($) | | | | | Svc Order Submitted Elec per LSR | Svc Order Submitted Manually per LSR | Incremental Charge - Manual Svc Order vs. Electronic-1st | Incremental Charge - Manual Svc Order vs. Electronic-Add'l | Incremental Charge - Manual Svc Order vs. Electronic-Disc 1st | Incremental Charge - Manual Svc Order vs. Electronic-Disc Add'l |
| | | | | | | Rec | Nonrecurring | | Nonrecurring Disconnect | | OSS Rates ($) | | | | | |
| | | | | | | | First | Add'l | First | Add'l | SOMEC | SOMAN | SOMAN | SOMAN | SOMAN | SOMAN |
| | 4-Wire DS1 Digital Loop - UNE Zone 1 | | 1 | UEPDC | USLDC | 85.70 | | | | | | | | | | |
| | 4-Wire DS1 Digital Loop - UNE Zone 2 | | 2 | UEPDC | USLDC | 194.96 | | | | | | | | | | |
| | 4-Wire DS1 Digital Loop - UNE Zone 3 | | 3 | UEPDC | USLDC | 491.94 | | | | | | | | | | |
| **UNE Port Rate** | | | | | | | | | | | | | | | | |
| | 4-Wire DDITS Digital Trunk Port (E:4/1/2004) | | | UEPDC | UDD1T | 68.47 | 441.34 | 245.90 | | | | | | | | |
| **NONRECURRING CHARGES - CURRENTLY COMBINED** | | | | | | | | | | | | | | | | |
| | 4-Wire DS1 Digital Loop / 4-Wire DDITS Trunk Port Combination - Switch-as-is (E:4/1/2004) | | | UEPDC | USAC4 | | 125.75 | 65.08 | | | | | | | | |
| | 4-Wire DS1 Digital Loop / 4-Wire DDITS Trunk Port Combination - Conversion with DS1 Changes (E:4/1/2004) | | | UEPDC | USAWA | | 125.75 | 65.08 | | | | | | | | |
| | 4-Wire DS1 Digital Loop / 4-Wire DDITS Trunk Port Combination - Conversion with Change - Trunk (E:4/1/2004) | | | UEPDC | USAWB | | 125.75 | 65.08 | | | | | | | | |
| **ADDITIONAL NRCs** | | | | | | | | | | | | | | | | |
| | 4-Wire DS1 Loop / 4-Wire DDITS Trunk Port - NRC - Subsequent Channel Activation/Chan - 2-Way Trunk | | | UEPDC | UDTTA | | 14.06 | 14.06 | | | | | | | | |
| | 4-Wire DS1 Loop / 4-Wire DDITS Trunk Port - Subsequent Channel Activation/Chan - 1-Way Outward Trunk | | | UEPDC | UDTTB | | 14.06 | 14.06 | | | | | | | | |
| | 4-Wire DS1 Loop / 4-Wire DDITS Trunk Port - Subsqnt Channel Activation/Chan Inward Trunk w/out DID | | | UEPDC | UDTTC | | 14.06 | 14.06 | | | | | | | | |
| | 4-Wire DS1 Loop / 4-Wire DDITS Trunk Port - Subsqnt Chan Activation Per Chan - Inward Trunk with DID | | | UEPDC | UDTTD | | 14.06 | 14.06 | | | | | | | | |
| | 4-Wire DS1 Loop / 4-Wire DDITS Trunk Port - Subsqnt Chan Activation / Chan - 2-Way DID w User Trans | | | UEPDC | UDTTE | | 14.06 | 14.06 | | | | | | | | |
| **BIPOLAR 8 ZERO SUBSTITUTION** | | | | | | | | | | | | | | | | |
| | B8ZS -Superframe Format | | | UEPDC | CCOSF | | 0.00l | 605.00s | | | | | | | | |
| | B8ZS - Extended Superframe Format | | | UEPDC | CCOEF | | 0.00l | 605.00s | | | | | | | | |
| **Alternate Mark Inversion** | | | | | | | | | | | | | | | | |
| | AMI -Superframe Format | | | UEPDC | MCOSF | | 0.00 | 0.00 | | | | | | | | |
| | AMI - Extended SuperFrame Format | | | UEPDC | MCOPO | | 0.00 | 0.00 | | | | | | | | |
| **Telephone Number/Trunk Group Establisment Charges** | | | | | | | | | | | | | | | | |
| | Telephone Number for 2-Way Trunk Group | | | UEPDC | UDTGX | 0.00 | | | | | | | | | | |
| | Telephone Number for 1-Way Outward Trunk Group | | | UEPDC | UDTGY | 0.00 | | | | | | | | | | |
| | Telephone Number for 1-Way Inward Trunk Group Without DID | | | UEPDC | UDTGZ | 0.00 | | | | | | | | | | |
| | DID Numbers for each Group of 20 DID Numbers | | | UEPDC | ND4 | 0.00 | | | | | | | | | | |
| | DID Numbers, Non- consecutive DID Numbers , Per Number | | | UEPDC | ND5 | 0.00 | | | | | | | | | | |
| | Reserve Non-Consecutive DID Nos. | | | UEPDC | ND6 | 0.00 | 0.00 | 0.00 | | | | | | | | |
| | Reserve DID Numbers | | | UEPDC | NDV | 0.00 | 0.00 | 0.00 | | | | | | | | |
| **Dedicated DS1 (Interoffice Channel Mileage) - FX/FCO for 4-Wire DS1 Digital Loop with 4-Wire DDITS Trunk Port** | | | | | | | | | | | | | | | | |
| | Interoffice Channel Mileage - Fixed rate 0-8 miles (Facilities Termination) | | | UEPDC | 1LNO1 | 70.47 | 86.69 | 79.44 | | | | | | | | |
| | Interoffice Channel Mileage - Additional rate per mile - 0-8 miles | | | UEPDC | 1LNOA | 0.2652 | 0.00 | 0.00 | | | | | | | | |
| | Interoffice Channel Mileage - Fixed rate 9-25 miles (Facilities Termination) | | | UEPDC | 1LNO2 | 0.00 | 0.00 | 0.00 | | | | | | | | |
| | Interoffice Channel Mileage - Additional rate per mile - 9-25 miles | | | UEPDC | 1LNOB | 0.2652 | 0.00 | 0.00 | | | | | | | | |
| | Interoffice Channel Mileage - Fixed rate 25+ miles (Facilities Termination) | | | UEPDC | 1LNO3 | 0.00 | 0.00 | 0.00 | 0.00 | | | | | | | |
| | Interoffice Channel Mileage - Additional rate per mile - 25+ miles | | | UEPDC | 1LNOC | 0.2652 | 0.00 | 0.00 | | | | | | | | |
| | Local Number Portability, per DS0 Activated | | | UEPDC | LNPCP | 3.15 | 0.00 | 0.00 | 0.00 | | | | | | | |
| | Central Office Termininating Point | | | UEPDC | CTG | 0.00 | | | | | | | | | | |
| **4-WIRE DS1 LOOP WITH CHANNELIZATION WITH PORT** | | | | | | | | | | | | | | | | |
| **System is 1 DS1 Loop, 1 D4 Channel Bank, and up to 24 Feature Activations** | | | | | | | | | | | | | | | | |
| **Each System can have up to 24 combinations of rates depending on type and number of ports used** | | | | | | | | | | | | | | | | |
| **The UNE-P DS1 combination rates below for 4-Wire DS1 Loop with Channelization with Port in this rate exhibit apply to the embedded base in place as of 10/2/03 until 4/1/04. After 4/1/04 these rates shall revert to tariff rates or a separate agreement.** | | | | | | | | | | | | | | | | |
| **Requests for 4-Wire DS1 Loop with Channelization with Port after the effective date of this amendment shall be provided pursuant to a separate agreement or tariff at BellSouth's discretion.** | | | | | | | | | | | | | | | | |
| **UNE DS1 Loop** | | | | | | | | | | | | | | | | |
| | 4-Wire DS1 Loop - UNE Zone 1 | | 1 | UEPMG | USLDC | 85.70 | 0.00 | 0.00 | | | | | | | | |

## UNBUNDLED NETWORK ELEMENTS - Louisiana

| CATEGORY | RATE ELEMENTS | Interim | Zone | BCS | USOC | RATES ($) | | | | | Svc Order Submitted Elec per LSR | Svc Order Submitted Manually per LSR | Attachment: 2 Incremental Charge - Manual Svc Order vs. Electronic-1st | Attachment: 2 Incremental Charge - Manual Svc Order vs. Electronic-Add'l | Exhibit: A Incremental Charge - Manual Svc Order vs. Electronic-Disc 1st | Exhibit: A Incremental Charge - Manual Svc Order vs. Electronic-Disc Add'l |
|---|---|---|---|---|---|---|---|---|---|---|---|---|---|---|---|---|
| | | | | | | Rec | Nonrecurring | | Nonrecurring Disconnect | | OSS Rates ($) | | | | | |
| | | | | | | | First | Add'l | First | Add'l | SOMEC | SOMAN | SOMAN | SOMAN | SOMAN | SOMAN |
| | 4-Wire DS1 Loop - UNE Zone 2 | | 2 | UEPMG | USLDC | 194.96 | 0.00 | 0.00 | | | | | | | | |
| | 4-Wire DS1 Loop - UNE Zone 3 | | 3 | UEPMG | USLDC | 491.94 | 0.00 | 0.00 | | | | | | | | |
| **UNE DSO Channelization Capacities (D4 Channel Bank Configurations)** | | | | | | | | | | | | | | | | |
| | 24 DSO Channel Capacity - 1 per DS1 | | | UEPMG | VUM24 | 97.35 | 0.00 | 0.00 | | | | | | | | |
| | 48 DSO Channel Capacity - 1 per 2 DS1s | | | UEPMG | VUM48 | 194.70 | 0.00 | 0.00 | | | | | | | | |
| | 96 DSO Channel Capacity -1per 4 DS1s | | | UEPMG | VUM96 | 389.40 | 0.00 | 0.00 | | | | | | | | |
| | 144 DS0 Channel Capacity - 1 per 6 DS1s | | | UEPMG | VUM14 | 584.10 | 0.00 | 0.00 | | | | | | | | |
| | 192 DS0 Channel Capacity -1 per 8 DS1s | | | UEPMG | VUM19 | 778.80 | 0.00 | 0.00 | | | | | | | | |
| | 240 DS0 Channel Capacity - 1 per 10 DS1s | | | UEPMG | VUM2O | 973.50 | 0.00 | 0.00 | | | | | | | | |
| | 288 DS0 Channel Capacity - 1 per 12 DS1s | | | UEPMG | VUM28 | 1,168.20 | 0.00 | 0.00 | | | | | | | | |
| | 384 DS0 Channel Capacity - 1 per 16 DS1s | | | UEPMG | VUM38 | 1,557.60 | 0.00 | 0.00 | | | | | | | | |
| | 480 DS0 Channel Capacity - 1 per 20 DS1s | | | UEPMG | VUM4O | 1,947.00 | 0.00 | 0.00 | | | | | | | | |
| | 576 DS0 Channel Capacity -1 per 24 DS1s | | | UEPMG | VUM57 | 2,336.40 | 0.00 | 0.00 | | | | | | | | |
| | 672 DS0 Channel Capacity - 1 per 28 DS1s | | | UEPMG | VUM67 | 2,725.80 | 0.00 | 0.00 | | | | | | | | |
| **Non-Recurring Charges (NRC) Associated with 4-Wire DS1 Loop with Channeliztion with Port - Conversion Charge Based on a System** | | | | | | | | | | | | | | | | |
| **A Minimum System configuration is One (1) DS1, One (1) D4 Channel Bank, and Up To 24 DSO Ports with Feature Activations.** | | | | | | | | | | | | | | | | |
| **Multiples of this configuration functioning as one are considered Add'l after the minimum system configuration is counted.** | | | | | | | | | | | | | | | | |
| | NRC - Conversion (Currently Combined) with or without BellSouth Allowed Changes | | | UEPMG | USAC4 | 0.00 | 146.13 | 8.12 | | | | | | | | |
| **System Additions at End User Locations Where 4-Wire DS1 Loop with Channelization with Port Combination Currently Exists and** | | | | | | | | | | | | | | | | |
| **New (Not Currently Combined) in all states, except in Density Zone 1 of Top 8 MSA's** | | | | | | | | | | | | | | | | |
| | 1 DS1/D4 Channel Bank - Additionally Add NRC for each Port and Assoc Fea Activation (E:4/1/2004) | | | UEPMG | VUMD4 | 0.00 | 715.54 | 467.54 | | | | | | | | |
| **Bipolar 8 Zero Substitution** | | | | | | | | | | | | | | | | |
| | Clear Channel Capability Format, superframe - Subsequent Activity Only | | | UEPMG | CCOSF | 0.00 | 0.00l | 605.00s | | | | | | | | |
| | Clear Channel Capability Format - Extended Superframe - Subsequent Activity Only | | | UEPMG | CCOEF | 0.00 | 0.00l | 605.00s | | | | | | | | |
| **Alternate Mark Inversion (AMI)** | | | | | | | | | | | | | | | | |
| | Superframe Format | | | UEPMG | MCOSF | 0.00 | 0.00 | 0.00 | | | | | | | | |
| | Extended Superframe Format | | | UEPMG | MCOPO | 0.00 | 0.00 | 0.00 | | | | | | | | |
| **Exchange Ports Associated with 4-Wire DS1 Loop with Channelization with Port** | | | | | | | | | | | | | | | | |
| **Exchange Ports** | | | | | | | | | | | | | | | | |
| | Line Side Combination Channelized PBX Trunk Port - Business (E:4/1/2004) | | | UEPPX | UEPCX | 1.52 | 0.00 | 0.00 | 0.00 | 0.00 | | | | | | |
| | Line Side Outward Channelized PBX Trunk Port - Business (E:4/1/2004) | | | UEPPX | UEPOX | 1.52 | 0.00 | 0.00 | 0.00 | 0.00 | | | | | | |
| | Line Side Inward Only Channelized PBX Trunk Port without DID (E:4/1/2004) | | | UEPPX | UEP1X | 1.52 | 0.00 | 0.00 | 0.00 | 0.00 | | | | | | |
| | 2-Wire Trunk Side Unbundled Channelized DID Trunk Port (E:4/1/2004) | | | UEPPX | UEPDM | 8.29 | 0.00 | 0.00 | 0.00 | 0.00 | | | | | | |
| | Unbundled Exchange Ports, 2-Wire Channelized – Outdial – (AL, KY, LA, MS, & TN)(Conversion from Network Access Service) (E:4/1/2004) | | | UEPPX | UEPCY | 1.52 | 0.00 | 0.00 | 0.00 | 0.00 | | | | | | |
| | Unbundled Exchange Ports, 2-Wire Channelized – Combination (AL, KY, LA, MS, & TN) (Conversion from Network Access Service) (E:4/1/2004) | | | UEPPX | UEPCT | 1.52 | 0.00 | 0.00 | 0.00 | 0.00 | | | | | | |
| | Unbundled Exchange Ports, 2-Wire Channelized – Outdial – Louisiana Only – Calling Plan (E:4/1/2004) | | | UEPPX | UEPC2 | 1.52 | 0.00 | 0.00 | 0.00 | 0.00 | | | | | | |
| | Unbundled Exchange Ports, 2-Wire Channelized – Two Way - Louisiana Only – Calling Plan (E:4/1/2004) | | | UEPPX | UEPC3 | 1.52 | 0.00 | 0.00 | 0.00 | 0.00 | | | | | | |
| **Feature Activations - Unbundled Loop Concentration** | | | | | | | | | | | | | | | | |
| | Feature (Service) Activation for each Line Port Terminated in D4 Bank | | | UEPPX | 1PQWM | 0.6497 | 25.36 | 13.40 | | | | | | | | |
| | Feature (Service) Activation for each Trunk Port Terminated in D4 Bank | | | UEPPX | 1PQWU | 0.6497 | 78.05 | 18.40 | | | | | | | | |
| **Telephone Number/ Group Establishment Charges for DID Service** | | | | | | | | | | | | | | | | |
| | DID Trunk Termination (1 per Port) | | | UEPPX | NDT | 0.00 | 0.00 | 0.00 | | | | | | | | |
| | DID Numbers - groups of 20 - Valid all States | | | UEPPX | ND4 | 0.00 | 0.00 | 0.00 | | | | | | | | |

| UNBUNDLED NETWORK ELEMENTS - Louisiana | | | | | | | | | | | | | | Attachment: 2 | | Exhibit: A | |
|---|---|---|---|---|---|---|---|---|---|---|---|---|---|---|---|---|---|
| CATEGORY | RATE ELEMENTS | Interl m | Zone | BCS | USOC | RATES ($) | | | | | Svc Order Submitted Elec per LSR | Svc Order Submitted Manually per LSR | Incremental Charge - Manual Svc Order vs. Electronic-1st | Incremental Charge - Manual Svc Order vs. Electronic-Add'l | Incremental Charge - Manual Svc Order vs. Electronic-Disc 1st | Incremental Charge - Manual Svc Order vs. Electronic-Disc Add'l |
| | | | | | | Rec | Nonrecurring | | Nonrecurring Disconnect | | OSS Rates ($) | | | | | |
| | | | | | | | First | Add'l | First | Add'l | SOMEC | SOMAN | SOMAN | SOMAN | SOMAN | SOMAN |
| | Non-Consecutive DID Numbers - per number | | | UEPPX | ND5 | 0.00 | 0.00 | 0.00 | | | | | | | | |
| | Reserve Non-Consecutive DID Numbers | | | UEPPX | ND6 | 0.00 | 0.00 | 0.00 | | | | | | | | |
| | Reserve DID Numbers | | | UEPPX | NDV | 0.00 | 0.00 | 0.00 | | | | | | | | |
| **Local Number Portability** | | | | | | | | | | | | | | | | |
| | Local Number Portability - 1 per port | | | UEPPX | LNPCP | 3.15 | 0.00 | 0.00 | | | | | | | | |
| **FEATURES - Vertical and Optional** | | | | | | | | | | | | | | | | |
| **Local Switching Features Offered with Line Side Ports Only** | | | | | | | | | | | | | | | | |
| | All Features Available | | | UEPPX | UEPVF | 0.00 | 0.00 | 0.00 | | | | | | | | |
| **UNBUNDLED CENTREX PORT/LOOP COMBINATIONS - COST BASED RATES** | | | | | | | | | | | | | | | | |
| **1. Cost Based Rates are applied where BellSouth is required by FCC and/or State Commission rule to provide Unbundled Local Switching or Switch Ports.** | | | | | | | | | | | | | | | | |
| **2. Features shall apply to the Unbundled Port/Loop Combination - Cost Based Rate section in the same manner as they are applied to the Stand-Alone Unbundled Port section of this Rate Exhibit.** | | | | | | | | | | | | | | | | |
| **3. End Office and Tandem Switching Usage and Common Transport Usage rates in the Port section of this rate exhibit shall apply to all combinations of loop/port network elements except for UNE Coin Port/Loop Combinations.** | | | | | | | | | | | | | | | | |
| **4. The first and additional Port nonrecurring charges apply to Not Currently Combined Combos. For Currently Combined Combos, the nonrecurring charges shall be those identified in the Nonrecurring - Currently Combined sections. Additional NRCs may apply also and are categorized accordingly.** | | | | | | | | | | | | | | | | |
| **5. Market Rates for Unbundled Centrex Port/Loop Combination will be negotiated on an Individual Case Basis, until further notice.** | | | | | | | | | | | | | | | | |
| **UNE-P CENTREX - 1AESS - (Valid in AL,FL,GA,KY,LA,MS,&TN only)** | | | | | | | | | | | | | | | | |
| **2-Wire VG Loop/2-Wire Voice Grade Port (Centrex) Combo** | | | | | | | | | | | | | | | | |
| **UNE Port/Loop Combination Rates (Non-Design)** | | | | | | | | | | | | | | | | |
| | 2-Wire VG Loop/2-Wire Voice Grade Port (Centrex) Port Combo - Non-Design | | 1 | UEP91 | | 13.13 | | | | | | | | | | |
| | 2-Wire VG Loop/2-Wire Voice Grade Port (Centrex)Port Combo - Non-Design | | 2 | UEP91 | | 23.75 | | | | | | | | | | |
| | 2-Wire VG Loop/2-Wire Voice Grade Port (Centrex)Port Combo - Non-Design | | 3 | UEP91 | | 49.62 | | | | | | | | | | |
| **UNE Port/Loop Combination Rates (Design)** | | | | | | | | | | | | | | | | |
| | 2-Wire VG Loop/2-Wire Voice Grade Port (Centrex) Port Combo - Design | | 1 | UEP91 | | 16.29 | | | | | | | | | | |
| | 2-Wire VG Loop/2-Wire Voice Grade Port (Centrex)Port Combo - Design | | 2 | UEP91 | | 26.71 | | | | | | | | | | |
| | 2-Wire VG Loop/2-Wire Voice Grade Port (Centrex)Port Combo - Design | | 3 | UEP91 | | 48.26 | | | | | | | | | | |
| **UNE Loop Rate** | | | | | | | | | | | | | | | | |
| | 2-Wire Voice Grade Loop (SL 1) - Zone 1 | | 1 | UEP91 | UECS1 | 11.77 | | | | | | | | | | |
| | 2-Wire Voice Grade Loop (SL 1) - Zone 2 | | 2 | UEP91 | UECS1 | 22.39 | | | | | | | | | | |
| | 2-Wire Voice Grade Loop (SL 1) - Zone 3 | | 3 | UEP91 | UECS1 | 48.26 | | | | | | | | | | |
| | 2-Wire Voice Grade Loop (SL 2) - Zone 1 | | 1 | UEP91 | UECS2 | 14.93 | | | | | | | | | | |
| | 2-Wire Voice Grade Loop (SL 2) - Zone 2 | | 2 | UEP91 | UECS2 | 25.35 | | | | | | | | | | |
| | 2-Wire Voice Grade Loop (SL 2) - Zone 3 | | 3 | UEP91 | UECS2 | 50.46 | | | | | | | | | | |
| **UNE Ports** | | | | | | | | | | | | | | | | |
| **All States (Except North Carolina and Sout Carolina)** | | | | | | | | | | | | | | | | |
| | 2-Wire Voice Grade Port (Centrex ) Basic Local Area | | | UEP91 | UEPYA | 1.36 | 38.85 | 19.08 | | | | | | | | |
| | 2-Wire Voice Grade Port (Centrex 800 termination)Basic Local Area | | | UEP91 | UEPYB | 1.36 | 38.85 | 19.08 | | | | | | | | |
| | 2-Wire Voice Grade Port (Centrex with Caller ID)Note1 Basic Local Area | | | UEP91 | UEPYH | 1.36 | 38.85 | 19.08 | | | | | | | | |
| | 2-Wire Voice Grade Port (Centrex from diff Serving Wire Center) Note 2, 3 Basic Local Area | | | UEP91 | UEPYM | 1.36 | 104.41 | 67.93 | | | | | | | | |
| | 2-Wire Voice Grade Port, Diff Serving Wire Center - 800 Service Term - Basic Local Area | | | UEP91 | UEPYZ | 1.36 | 104.41 | 67.93 | | | | | | | | |
| | 2-Wire Voice Grade Port terminated in on Megalink or equivalent - Basic Local Area | | | UEP91 | UEPY9 | 1.36 | 38.85 | 19.08 | | | | | | | | |
| | 2-Wire Voice Grade Port Terminated on 800 Service Term - Basic Local Area | | | UEP91 | UEPY2 | 1.36 | 38.85 | 19.08 | | | | | | | | |
| **AL, KY, LA, MS, & TN Only** | | | | | | | | | | | | | | | | |
| | 2-Wire Voice Grade Port (Centrex ) | | | UEP91 | UEPQA | 1.36 | 38.85 | 19.08 | | | | | | | | |
| | 2-Wire Voice Grade Port (Centrex 800 termination) | | | UEP91 | UEPQB | 1.36 | 38.85 | 19.08 | | | | | | | | |
| | 2-Wire Voice Grade Port (Centrex with Caller ID)1 | | | UEP91 | UEPQH | 1.36 | 38.85 | 19.08 | | | | | | | | |
| | 2-Wire Voice Grade Port (Centrex from diff Serving Wire Center)2,3 | | | UEP91 | UEPQM | 1.36 | 104.41 | 67.93 | | | | | | | | |

| UNBUNDLED NETWORK ELEMENTS - Louisiana | | | | | | | | | | | | | | Attachment: 2 | | Exhibit: A | |
|---|---|---|---|---|---|---|---|---|---|---|---|---|---|---|---|---|---|
| CATEGORY | | RATE ELEMENTS | Interim | Zone | BCS | USOC | RATES ($) | | | | | Svc Order Submitted Elec per LSR | Svc Order Submitted Manually per LSR | Incremental Charge - Manual Svc Order vs. Electronic-1st | Incremental Charge - Manual Svc Order vs. Electronic-Add'l | Incremental Charge - Manual Svc Order vs. Electronic-Disc 1st | Incremental Charge - Manual Svc Order vs. Electronic-Disc Add'l |
| | | | | | | | Rec | Nonrecurring | | Nonrecurring Disconnect | | OSS Rates ($) | | | | | |
| | | | | | | | | First | Add'l | First | Add'l | SOMEC | SOMAN | SOMAN | SOMAN | SOMAN | SOMAN |
| | | 2-Wire Voice Grade Port, Diff Serving Wire Center - 2,3 - 800 Service Term | | | UEP91 | UEPQZ | 1.36 | 104.41 | 67.93 | | | | | | | | |
| | | 2-Wire Voice Grade Port terminated in on Megalink or equivalent | | | UEP91 | UEPQ9 | 1.36 | 38.85 | 19.08 | | | | | | | | |
| | | 2-Wire Voice Grade Port Terminated on 800 Service Term | | | UEP91 | UEPQ2 | 1.36 | 38.85 | 19.08 | | | | | | | | |
| | **Local Switching** | | | | | | | | | | | | | | | | |
| | | Centrex Intercom Funtionality, per port | | | UEP91 | URECS | 0.8577 | | | | | | | | | | |
| | **Local Number Portability** | | | | | | | | | | | | | | | | |
| | | Local Number Portability (1 per port) | | | UEP91 | LNPCC | 0.35 | | | | | | | | | | |
| | **Features** | | | | | | | | | | | | | | | | |
| | | All Standard Features Offered, per port | | | UEP91 | UEPVF | 0.00 | | | | | | | | | | |
| | | All Select Features Offered, per port | | | UEP91 | UEPVS | 0.00 | 412.25 | | | | | | | | | |
| | | All Centrex Control Features Offered, per port | | | UEP91 | UEPVC | 0.00 | | | | | | | | | | |
| | **NARS** | | | | | | | | | | | | | | | | |
| | | Unbundled Network Access Register - Combination | | | UEP91 | UARCX | 0.00 | 0.00 | 0.00 | 0.00 | 0.00 | | | | | | |
| | | Unbundled Network Access Register - Indial | | | UEP91 | UAR1X | 0.00 | 0.00 | 0.00 | 0.00 | 0.00 | | | | | | |
| | | Unbundled Network Access Register - Outdial | | | UEP91 | UAROX | 0.00 | 0.00 | 0.00 | 0.00 | 0.00 | | | | | | |
| | **Miscellaneous Terminations** | | | | | | | | | | | | | | | | |
| | **2-Wire Trunk Side** | | | | | | | | | | | | | | | | |
| | | Trunk Side Terminations, each | | | UEP91 | CENA6 | 8.29 | 115.85 | 18.20 | | | | | | | | |
| | **Interoffice Channel Mileage - 2-Wire** | | | | | | | | | | | | | | | | |
| | | Interoffice Channel Facilities Termination - Voice Grade | | | UEP91 | M1GBC | 22.60 | 39.36 | 26.62 | | | | | | | | |
| | | Interoffice Channel mileage, per mile or fraction of mile | | | UEP91 | M1GBM | 0.013 | | | | | | | | | | |
| | **Feature Activations (DS0) Centrex Loops on Channelized DS1 Service** | | | | | | | | | | | | | | | | |
| | **D4 Channel Bank Feature Activations** | | | | | | | | | | | | | | | | |
| | | Feature Activation on D-4 Channel Bank Centrex Loop Slot | | | UEP91 | 1PQWS | 0.6497 | | | | | | | | | | |
| | | Feature Activation on D-4 Channel Bank FX line Side Loop Slot | | | UEP91 | 1PQW6 | 0.6497 | | | | | | | | | | |
| | | Feature Activation on D-4 Channel Bank FX Trunk Side Loop Slot | | | UEP91 | 1PQW7 | 0.6497 | | | | | | | | | | |
| | | Feature Activation on D-4 Channel Bank Centrex Loop Slot - Different Wire Center | | | UEP91 | 1PQWP | 0.6497 | | | | | | | | | | |
| | | Feature Activation on D-4 Channel Bank Private Line Loop Slot | | | UEP91 | 1PQWV | 0.6497 | | | | | | | | | | |
| | | Feature Activation on D-4 Channel Bank Tjie Line/Trunk Loop Slot | | | UEP91 | 1PQWQ | 0.6497 | | | | | | | | | | |
| | | Feature Activation on D-4 Channel Bank WATS Loop Slot | | | UEP91 | 1PQWA | 0.6497 | | | | | | | | | | |
| | **Non-Recurring Charges (NRC) Associated with UNE-P Centrex** | | | | | | | | | | | | | | | | |
| | | Conversion - Currently Combined Switch-As-Is with allowed changes, per port | | | UEP91 | USAC2 | | 0.10 | 0.10 | | | | | | | | |
| | | Conversion of Existing Centrex Common Block | | | UEP91 | USACN | 0.00 | 36.66 | 16.10 | | | | | | | | |
| | | New Centrex Standard Common Block | | | UEP91 | M1ACS | 0.00 | 680.40 | | | | | | | | | |
| | | New Centrex Customized Common Block | | | UEP91 | M1ACC | 0.00 | 680.40 | | | | | | | | | |
| | | Secondary Block, per Block | | | UEP91 | M2CC1 | 0.00 | 79.31 | | | | | | | | | |
| | | NAR Establishment Charge, Per Occasion | | | UEP91 | URECA | 0.00 | 73.93 | | | | | | | | | |
| | **Additional Non-Recurring Charges (NRC)** | | | | | | | | | | | | | | | | |
| | | Unbundled Miscellaneous Rate Element, Tag Loop at End Use Premise | | | UEP91 | URETL | | 8.33 | 0.83 | | | | | | | | |
| | | Unbundled Miscellaneous Rate Element, Tag Design Loop at End Use Premise | | | UEP91 | URETN | | 11.20 | 1.10 | | | | | | | | |
| | **UNE-P CENTREX - 5ESS (Valid in All States)** | | | | | | | | | | | | | | | | |
| | **2-Wire VG Loop/2-Wire Voice Grade Port (Centrex) Combo** | | | | | | | | | | | | | | | | |
| | **UNE Port/Loop Combination Rates (Non-Design)** | | | | | | | | | | | | | | | | |
| | | 2-Wire VG Loop/2-Wire Voice Grade Port (Centrex) Port Combo - Non-Design | | 1 | UEP95 | | 13.13 | | | | | | | | | | |
| | | 2-Wire VG Loop/2-Wire Voice Grade Port (Centrex)Port Combo - Non-Design | | 2 | UEP95 | | 23.75 | | | | | | | | | | |
| | | 2-Wire VG Loop/2-Wire Voice Grade Port (Centrex)Port Combo - Non-Design | | 3 | UEP95 | | 49.62 | | | | | | | | | | |

## UNBUNDLED NETWORK ELEMENTS - Louisiana

| CATEGORY | RATE ELEMENTS | Interim | Zone | BCS | USOC | RATES ($) | | | | | Svc Order Submitted Elec per LSR | Svc Order Submitted Manually per LSR | Attachment: 2 Incremental Charge - Manual Svc Order vs. Electronic-1st | Attachment: 2 Incremental Charge - Manual Svc Order vs. Electronic-Add'l | Exhibit: A Incremental Charge - Manual Svc Order vs. Electronic-Disc 1st | Exhibit: A Incremental Charge - Manual Svc Order vs. Electronic-Disc Add'l |
|---|---|---|---|---|---|---|---|---|---|---|---|---|---|---|---|---|
| | | | | | | Rec | Nonrecurring | | Nonrecurring Disconnect | | OSS Rates ($) | | | | | |
| | | | | | | | First | Add'l | First | Add'l | SOMEC | SOMAN | SOMAN | SOMAN | SOMAN | SOMAN |
| **UNE Port/Loop Combination Rates (Design)** | | | | | | | | | | | | | | | | |
| | 2-Wire VG Loop/2-Wire Voice Grade Port (Centrex) Port Combo - Design | | 1 | UEP95 | | 16.29 | | | | | | | | | | |
| | 2-Wire VG Loop/2-Wire Voice Grade Port (Centrex)Port Combo - Design | | 2 | UEP95 | | 26.71 | | | | | | | | | | |
| | 2-Wire VG Loop/2-Wire Voice Grade Port (Centrex)Port Combo - Design | | 3 | UEP95 | | 51.82 | | | | | | | | | | |
| **UNE Loop Rate** | | | | | | | | | | | | | | | | |
| | 2-Wire Voice Grade Loop (SL 1) - Zone 1 | | 1 | UEP95 | UECS1 | 11.77 | | | | | | | | | | |
| | 2-Wire Voice Grade Loop (SL 1) - Zone 2 | | 2 | UEP95 | UECS1 | 22.39 | | | | | | | | | | |
| | 2-Wire Voice Grade Loop (SL 1) - Zone 3 | | 3 | UEP95 | UECS1 | 48.26 | | | | | | | | | | |
| | 2-Wire Voice Grade Loop (SL 2) - Zone 1 | | 1 | UEP95 | UECS2 | 14.93 | | | | | | | | | | |
| | 2-Wire Voice Grade Loop (SL 2) - Zone 2 | | 2 | UEP95 | UECS2 | 25.35 | | | | | | | | | | |
| | 2-Wire Voice Grade Loop (SL 2) - Zone 3 | | 3 | UEP95 | UECS2 | 50.46 | | | | | | | | | | |
| **UNE Port Rate** | | | | | | | | | | | | | | | | |
| **All States** | | | | | | | | | | | | | | | | |
| | 2-Wire Voice Grade Port (Centrex ) Basic Local Area | | | UEP95 | UEPYA | 1.36 | 38.85 | 19.08 | | | | | | | | |
| | 2-Wire Voice Grade Port (Centrex 800 termination) | | | UEP95 | UEPYB | 1.36 | 38.85 | 19.08 | | | | | | | | |
| | 2-Wire Voice Grade Port (Centrex with Caller ID)1Basic Local Area | | | UEP95 | UEPYH | 1.36 | 38.85 | 19.08 | | | | | | | | |
| | 2-Wire Voice Grade Port (Centrex from diff Serving Wire Center)2,3 Basic Local Area | | | UEP95 | UEPYM | 1.36 | 104.41 | 67.93 | | | | | | | | |
| | 2-Wire Voice Grade Port, Diff Serving Wire Center 2,3 - 800 Service Term - Basic Local Area | | | UEP95 | UEPYZ | 1.36 | 104.41 | 67.93 | | | | | | | | |
| | 2-Wire Voice Grade Port terminated in on Megalink or equivalent - Basic Local Area | | | UEP95 | UEPY9 | 1.36 | 38.85 | 19.08 | | | | | | | | |
| | 2-Wire Voice Grade Port Terminated on 800 Service Term - Basic Local Area | | | UEP95 | UEPY2 | 1.36 | 38.85 | 19.08 | | | | | | | | |
| **AL, KY, LA, MS, SC, & TN Only** | | | | | | | | | | | | | | | | |
| | 2-Wire Voice Grade Port (Centrex ) | | | UEP95 | UEPQA | 1.36 | 38.85 | 19.08 | | | | | | | | |
| | 2-Wire Voice Grade Port (Centrex 800 termination) | | | UEP95 | UEPQB | 1.36 | 38.85 | 19.08 | | | | | | | | |
| | 2-Wire Voice Grade Port (Centrex with Caller ID)1 | | | UEP95 | UEPQH | 1.36 | 38.85 | 19.08 | | | | | | | | |
| | 2-Wire Voice Grade Port (Centrex from diff Serving Wire Center)2,3 | | | UEP95 | UEPQM | 1.36 | 104.41 | 67.93 | | | | | | | | |
| | 2-Wire Voice Grade Port, Diff Serving Wire Center - 800 Service Term 2,3 | | | UEP95 | UEPQZ | 1.36 | 104.41 | 67.93 | | | | | | | | |
| | 2-Wire Voice Grade Port terminated in on Megalink or equivalent | | | UEP95 | UEPQ9 | 1.36 | 38.85 | 19.08 | | | | | | | | |
| | 2-Wire Voice Grade Port Terminated on 800 Service Term | | | UEP95 | UEPQ2 | 1.36 | 38.85 | 19.08 | | | | | | | | |
| **Local Switching** | | | | | | | | | | | | | | | | |
| | Centrex Intercom Funtionality, per port | | | UEP95 | URECS | 0.8577 | | | | | | | | | | |
| **Local Number Portability** | | | | | | | | | | | | | | | | |
| | Local Number Portability (1 per port) | | | UEP95 | LNPCC | 0.35 | | | | | | | | | | |
| **Features** | | | | | | | | | | | | | | | | |
| | All Standard Features Offered, per port | | | UEP95 | UEPVF | 0.00 | | | | | | | | | | |
| | All Select Features Offered, per port | | | UEP95 | UEPVS | 0.00 | 412.25 | | | | | | | | | |
| | All Centrex Control Features Offered, per port | | | UEP95 | UEPVC | 0.00 | | | | | | | | | | |
| **NARS** | | | | | | | | | | | | | | | | |
| | Unbundled Network Access Register - Combination | | | UEP95 | UARCX | 0.00 | 0.00 | 0.00 | 0.00 | 0.00 | | | | | | |
| | Unbundled Network Access Register - Indial | | | UEP95 | UAR1X | 0.00 | 0.00 | 0.00 | 0.00 | 0.00 | | | | | | |
| | Unbundled Network Access Register - Outdial | | | UEP95 | UAROX | 0.00 | 0.00 | 0.00 | 0.00 | 0.00 | | | | | | |
| **Miscellaneous Terminations** | | | | | | | | | | | | | | | | |
| **2-Wire Trunk Side** | | | | | | | | | | | | | | | | |
| | Trunk Side Terminations, each | | | UEP95 | CEND6 | 8.29 | 115.85 | 18.20 | | | | | | | | |
| **4-Wire Digital (1.544 Megabits)** | | | | | | | | | | | | | | | | |
| | DS1 Circuit Terminations, each | | | UEP95 | M1HD1 | 68.47 | 196.18 | 92.92 | | | | | | | | |
| | DS0 Channels Activated, each | | | UEP95 | M1HDO | 0.00 | 14.06 | | | | | | | | | |
| **Interoffice Channel Mileage - 2-Wire** | | | | | | | | | | | | | | | | |
| | Interoffice Channel Facilities Termination | | | UEP95 | M1GBC | 22.60 | 39.36 | 26.62 | | | | | | | | |

## UNBUNDLED NETWORK ELEMENTS - Louisiana

| CATEGORY | RATE ELEMENTS | Interim | Zone | BCS | USOC | RATES ($) | | | | | Svc Order Submitted Elec per LSR | Svc Order Submitted Manually per LSR | Attachment: 2 Incremental Charge - Manual Svc Order vs. Electronic-1st | Attachment: 2 Incremental Charge - Manual Svc Order vs. Electronic-Add'l | Exhibit: A Incremental Charge - Manual Svc Order vs. Electronic-Disc 1st | Exhibit: A Incremental Charge - Manual Svc Order vs. Electronic-Disc Add'l |
|---|---|---|---|---|---|---|---|---|---|---|---|---|---|---|---|---|
| | | | | | | Rec | Nonrecurring | | Nonrecurring Disconnect | | OSS Rates ($) | | | | | |
| | | | | | | | First | Add'l | First | Add'l | SOMEC | SOMAN | SOMAN | SOMAN | SOMAN | SOMAN |
| | Interoffice Channel mileage, per mile or fraction of mile | | | UEP95 | M1GBM | 0.013 | | | | | | | | | | |
| | **Feature Activations (DS0) Centrex Loops on Channelized DS1 Service** | | | | | | | | | | | | | | | |
| | **D4 Channel Bank Feature Activations** | | | | | | | | | | | | | | | |
| | Feature Activation on D-4 Channel Bank Centrex Loop Slot | | | UEP95 | 1PQWS | 0.6497 | | | | | | | | | | |
| | Feature Activation on D-4 Channel Bank FX line Side Loop Slot | | | UEP95 | 1PQW6 | 0.6497 | | | | | | | | | | |
| | Feature Activation on D-4 Channel Bank FX Trunk Side Loop Slot | | | UEP95 | 1PQW7 | 0.6497 | | | | | | | | | | |
| | Feature Activation on D-4 Channel Bank Centrex Loop Slot - Different Wire Center | | | UEP95 | 1PQWP | 0.6497 | | | | | | | | | | |
| | Feature Activation on D-4 Channel Bank Private Line Loop Slot | | | UEP95 | 1PQWV | 0.6497 | | | | | | | | | | |
| | Feature Activation on D-4 Channel Bank Tjie Line/Trunk Loop Slot | | | UEP95 | 1PQWQ | 0.6497 | | | | | | | | | | |
| | Feature Activation on D-4 Channel Bank WATS Loop Slot | | | UEP95 | 1PQWA | 0.6497 | | | | | | | | | | |
| | **Non-Recurring Charges (NRC) Associated with UNE-P Centrex** | | | | | | | | | | | | | | | |
| | NRC Conversion Currently Combined Switch-As-Is with allowed changes, per port | | | UEP95 | USAC2 | | 0.10 | 0.10 | | | | | | | | |
| | Conversion of Existing Centrex Common Block, each | | | UEP95 | USACN | | 36.66 | 16.10 | | | | | | | | |
| | New Centrex Standard Common Block | | | UEP95 | M1ACS | 0.00 | 680.40 | | | | | | | | | |
| | New Centrex Customized Common Block | | | UEP95 | M1ACC | 0.00 | 680.40 | | | | | | | | | |
| | NAR Establishment Charge, Per Occasion | | | UEP95 | URECA | 0.00 | 73.93 | | | | | | | | | |
| | **Additional Non-Recurring Charges (NRC)** | | | | | | | | | | | | | | | |
| | Unbundled Miscellaneous Rate Element, Tag Loop at End Use Premise | | | UEP95 | URETL | | 8.33 | 0.83 | | | | | | | | |
| | Unbundled Miscellaneous Rate Element, Tag Design Loop at End Use Premise | | | UEP95 | URETN | | 11.20 | 1.10 | | | | | | | | |
| | **UNE-P CENTREX - DMS100 (Valid in All States)** | | | | | | | | | | | | | | | |
| | **2-Wire VG Loop/2-Wire Voice Grade Port (Centrex) Combo** | | | | | | | | | | | | | | | |
| | **UNE Port/Loop Combination Rates (Non-Design)** | | | | | | | | | | | | | | | |
| | 2-Wire VG Loop/2-Wire Voice Grade Port (Centrex) Port Combo - Non-Design | | 1 | UEP9D | | 13.13 | | | | | | | | | | |
| | 2-Wire VG Loop/2-Wire Voice Grade Port (Centrex)Port Combo - Non-Design | | 2 | UEP9D | | 23.75 | | | | | | | | | | |
| | 2-Wire VG Loop/2-Wire Voice Grade Port (Centrex)Port Combo - Non-Design | | 3 | UEP9D | | 49.62 | | | | | | | | | | |
| | **UNE Port/Loop Combination Rates (Design)** | | | | | | | | | | | | | | | |
| | 2-Wire VG Loop/2-Wire Voice Grade Port (Centrex) Port Combo - Design | | 1 | UEP9D | | 16.29 | | | | | | | | | | |
| | 2-Wire VG Loop/2-Wire Voice Grade Port (Centrex)Port Combo - Design | | 2 | UEP9D | | 26.71 | | | | | | | | | | |
| | 2-Wire VG Loop/2-Wire Voice Grade Port (Centrex)Port Combo - Design | | 3 | UEP9D | | 51.82 | | | | | | | | | | |
| | **UNE Loop Rate** | | | | | | | | | | | | | | | |
| | 2-Wire Voice Grade Loop (SL 1) - Zone 1 | | 1 | UEP9D | UECS1 | 11.77 | | | | | | | | | | |
| | 2-Wire Voice Grade Loop (SL 1) - Zone 2 | | 2 | UEP9D | UECS1 | 22.39 | | | | | | | | | | |
| | 2-Wire Voice Grade Loop (SL 1) - Zone 3 | | 3 | UEP9D | UECS1 | 48.26 | | | | | | | | | | |
| | 2-Wire Voice Grade Loop (SL 2) - Zone 1 | | 1 | UEP9D | UECS2 | 14.93 | | | | | | | | | | |
| | 2-Wire Voice Grade Loop (SL 2) - Zone 2 | | 2 | UEP9D | UECS2 | 25.35 | | | | | | | | | | |
| | 2-Wire Voice Grade Loop (SL 2) - Zone 3 | | 3 | UEP9D | UECS2 | 50.46 | | | | | | | | | | |
| | **UNE Port Rate** | | | | | | | | | | | | | | | |
| | **ALL STATES** | | | | | | | | | | | | | | | |
| | 2-Wire Voice Grade Port (Centrex ) Basic Local Area | | | UEP9D | UEPYA | 1.36 | 38.85 | 19.08 | | | | | | | | |
| | 2-Wire Voice Grade Port (Centrex 800 termination)Basic Local Area | | | UEP9D | UEPYB | 1.36 | 38.85 | 19.08 | | | | | | | | |
| | 2-Wire Voice Grade Port (Centrex / EBS-PSET)3Basic Local Area | | | UEP9D | UEPYC | 1.36 | 38.85 | 19.08 | | | | | | | | |
| | 2-Wire Voice Grade Port (Centrex / EBS-M5009)3Basic Local Area | | | UEP9D | UEPYD | 1.36 | 38.85 | 19.08 | | | | | | | | |

| UNBUNDLED NETWORK ELEMENTS - Louisiana | | | | | | | | | | | | | | Attachment: 2 | | Exhibit: A | |
|---|---|---|---|---|---|---|---|---|---|---|---|---|---|---|---|---|---|
| CATEGORY | | RATE ELEMENTS | Interim | Zone | BCS | USOC | RATES ($) | | | | | Svc Order Submitted Elec per LSR | Svc Order Submitted Manually per LSR | Incremental Charge - Manual Svc Order vs. Electronic-1st | Incremental Charge - Manual Svc Order vs. Electronic-Add'l | Incremental Charge - Manual Svc Order vs. Electronic-Disc 1st | Incremental Charge - Manual Svc Order vs. Electronic-Disc Add'l |
| | | | | | | | Rec | Nonrecurring | | Nonrecurring Disconnect | | OSS Rates ($) | | | | | |
| | | | | | | | | First | Add'l | First | Add'l | SOMEC | SOMAN | SOMAN | SOMAN | SOMAN | SOMAN |
| | | 2-Wire Voice Grade Port (Centrex / EBS-M5209))3 Basic Local Area | | | UEP9D | UEPYE | 1.36 | 38.85 | 19.08 | | | | | | | | |
| | | 2-Wire Voice Grade Port (Centrex / EBS-M5112))3 Basic Local Area | | | UEP9D | UEPYF | 1.36 | 38.85 | 19.08 | | | | | | | | |
| | | 2-Wire Voice Grade Port (Centrex / EBS-M5312))3Basic Local Area | | | UEP9D | UEPYG | 1.36 | 38.85 | 19.08 | | | | | | | | |
| | | 2-Wire Voice Grade Port (Centrex / EBS-M5008))3 Basic Local Area | | | UEP9D | UEPYT | 1.36 | 38.85 | 19.08 | | | | | | | | |
| | | 2-Wire Voice Grade Port (Centrex / EBS-M5208))3 Basic Local Area | | | UEP9D | UEPYU | 1.36 | 38.85 | 19.08 | | | | | | | | |
| | | 2-Wire Voice Grade Port (Centrex / EBS-M5216))3 Basic Local Area | | | UEP9D | UEPYV | 1.36 | 38.85 | 19.08 | | | | | | | | |
| | | 2-Wire Voice Grade Port (Centrex / EBS-M5316))3 Basic Local Area | | | UEP9D | UEPY3 | 1.36 | 38.85 | 19.08 | | | | | | | | |
| | | 2-Wire Voice Grade Port (Centrex with Caller ID) Basic Local Area | | | UEP9D | UEPYH | 1.36 | 38.85 | 19.08 | | | | | | | | |
| | | 2-Wire Voice Grade Port (Centrex/Caller ID/Msg Wtg Lamp Indication))4 Basic Local Area | | | UEP9D | UEPYW | 1.36 | 38.85 | 19.08 | | | | | | | | |
| | | 2-Wire Voice Grade Port (Centrex/Msg Wtg Lamp Indication))4 Basic Local Area | | | UEP9D | UEPYJ | 1.36 | 38.85 | 19.08 | | | | | | | | |
| | | 2-Wire Voice Grade Port (Centrex from diff Serving Wire Center) 2,3-Basic Local Area | | | UEP9D | UEPYM | 1.36 | 104.41 | 67.93 | | | | | | | | |
| | | 2-Wire Voice Grade Port (Centrex/differ SWC /EBS-PSET)2,3,4 Basic Local Area | | | UEP9D | UEPYO | 1.36 | 104.41 | 67.93 | | | | | | | | |
| | | 2-Wire Voice Grade Port (Centrex/differ SWC /EBS-M5009)2,3,4 Basic Local Area | | | UEP9D | UEPYP | 1.36 | 104.41 | 67.93 | | | | | | | | |
| | | 2-Wire Voice Grade Port (Centrex/differ SWC /EBS-5209)2,3,4 Basic Local Area | | | UEP9D | UEPYQ | 1.36 | 104.41 | 67.93 | | | | | | | | |
| | | 2-Wire Voice Grade Port (Centrex/differ SWC /EBS-M5112)2,3,4 Basic Local Area | | | UEP9D | UEPYR | 1.36 | 104.41 | 67.93 | | | | | | | | |
| | | 2-Wire Voice Grade Port (Centrex/differ SWC /EBS-M5312)2,3,4 Basic Local Area | | | UEP9D | UEPYS | 1.36 | 104.41 | 67.93 | | | | | | | | |
| | | 2-Wire Voice Grade Port (Centrex/differ SWC /EBS-M5008)2,3,4 Basic Local Area | | | UEP9D | UEPY4 | 1.36 | 104.41 | 67.93 | | | | | | | | |
| | | 2-Wire Voice Grade Port (Centrex/differ SWC /EBS-M5208)2, 3 Basic Local Area | | | UEP9D | UEPY5 | 1.36 | 104.41 | 67.93 | | | | | | | | |
| | | 2-Wire Voice Grade Port (Centrex/differ SWC /EBS-M5216)2,3,4 Basic Local Area | | | UEP9D | UEPY6 | 1.36 | 104.41 | 67.93 | | | | | | | | |
| | | 2-Wire Voice Grade Port (Centrex/differ SWC /EBS-M5316)2,3,4 Basic Local Area | | | UEP9D | UEPY7 | 1.36 | 104.41 | 67.93 | | | | | | | | |
| | | 2-Wire Voice Grade Port, Diff Serving Wire Center - 800 Service Term 2,3 | | | UEP9D | UEPYZ | 1.36 | 104.41 | 67.93 | | | | | | | | |
| | | 2-Wire Voice Grade Port terminated in on Megalink or equivalent Basic Local Area | | | UEP9D | UEPY9 | 1.36 | 38.85 | 19.08 | | | | | | | | |
| | | 2-Wire Voice Grade Port Terminated on 800 Service Term Basic Local Area | | | UEP9D | UEPY2 | 1.36 | 38.85 | 19.08 | | | | | | | | |
| | AL, KY, LA, MS, SC, & TN Only | | | | | | | | | | | | | | | | |
| | | 2-Wire Voice Grade Port (Centrex) | | | UEP9D | UEPQA | 1.36 | 38.85 | 19.08 | | | | | | | | |
| | | 2-Wire Voice Grade Port (Centrex 800 termination) | | | UEP9D | UEPQB | 1.36 | 38.85 | 19.08 | | | | | | | | |
| | | 2-Wire Voice Grade Port (Centrex / EBS-PSET)4 | | | UEP9D | UEPQC | 1.36 | 38.85 | 19.08 | | | | | | | | |
| | | 2-Wire Voice Grade Port (Centrex / EBS-M5009)4 | | | UEP9D | UEPQD | 1.36 | 38.85 | 19.08 | | | | | | | | |
| | | 2-Wire Voice Grade Port (Centrex / EBS-M5209)4 | | | UEP9D | UEPQE | 1.36 | 38.85 | 19.08 | | | | | | | | |
| | | 2-Wire Voice Grade Port (Centrex / EBS-M5112)4 | | | UEP9D | UEPQF | 1.36 | 38.85 | 19.08 | | | | | | | | |
| | | 2-Wire Voice Grade Port (Centrex / EBS-M5312)4 | | | UEP9D | UEPQG | 1.36 | 38.85 | 19.08 | | | | | | | | |
| | | 2-Wire Voice Grade Port (Centrex / EBS-M5008)4 | | | UEP9D | UEPQT | 1.36 | 38.85 | 19.08 | | | | | | | | |
| | | 2-Wire Voice Grade Port (Centrex / EBS-M5208)4 | | | UEP9D | UEPQU | 1.36 | 38.85 | 19.08 | | | | | | | | |
| | | 2-Wire Voice Grade Port (Centrex / EBS-M5216)4 | | | UEP9D | UEPQV | 1.36 | 38.85 | 19.08 | | | | | | | | |
| | | 2-Wire Voice Grade Port (Centrex / EBS-M5316)4 | | | UEP9D | UEPQ3 | 1.36 | 38.85 | 19.08 | | | | | | | | |
| | | 2-Wire Voice Grade Port (Centrex with Caller ID) | | | UEP9D | UEPQH | 1.36 | 38.85 | 19.08 | | | | | | | | |

## UNBUNDLED NETWORK ELEMENTS - Louisiana

| CATEGORY | RATE ELEMENTS | Interim | Zone | BCS | USOC | RATES ($) | | | | | Svc Order Submitted Elec per LSR | Svc Order Submitted Manually per LSR | Attachment: 2 Incremental Charge - Manual Svc Order vs. Electronic-1st | Attachment: 2 Incremental Charge - Manual Svc Order vs. Electronic-Add'l | Exhibit: A Incremental Charge - Manual Svc Order vs. Electronic-Disc 1st | Exhibit: A Incremental Charge - Manual Svc Order vs. Electronic-Disc Add'l |
|---|---|---|---|---|---|---|---|---|---|---|---|---|---|---|---|---|
| | | | | | | Rec | Nonrecurring | | Nonrecurring Disconnect | | OSS Rates ($) | | | | | |
| | | | | | | | First | Add'l | First | Add'l | SOMEC | SOMAN | SOMAN | SOMAN | SOMAN | SOMAN |
| | 2-Wire Voice Grade Port (Centrex/Caller ID/Msg Wtg Lamp Indication)4 | | | UEP9D | UEPQW | 1.36 | 38.85 | 19.08 | | | | | | | | |
| | 2-Wire Voice Grade Port (Centrex/Msg Wtg Lamp Indication)4 | | | UEP9D | UEPQJ | 1.36 | 38.85 | 19.08 | | | | | | | | |
| | 2-Wire Voice Grade Port (Centrex from diff Serving Wire Center) 2,3 | | | UEP9D | UEPQM | 1.36 | 104.41 | 67.93 | | | | | | | | |
| | 2-Wire Voice Grade Port (Centrex/differ SWC /EBS-PSET)2,3,4 | | | UEP9D | UEPQO | 1.36 | 104.41 | 67.93 | | | | | | | | |
| | 2-Wire Voice Grade Port (Centrex/differ SWC /EBS-M5009)2,3,4 | | | UEP9D | UEPQP | 1.36 | 104.41 | 67.93 | | | | | | | | |
| | 2-Wire Voice Grade Port (Centrex/differ SWC /EBS-5209)2,3,4 | | | UEP9D | UEPQQ | 1.36 | 104.41 | 67.93 | | | | | | | | |
| | 2-Wire Voice Grade Port (Centrex/differ SWC /EBS-M5112)2,3,4 | | | UEP9D | UEPQR | 1.36 | 104.41 | 67.93 | | | | | | | | |
| | 2-Wire Voice Grade Port (Centrex/differ SWC /EBS-M5312)2,3,4 | | | UEP9D | UEPQS | 1.36 | 104.41 | 67.93 | | | | | | | | |
| | 2-Wire Voice Grade Port (Centrex/differ SWC /EBS-M5008)2,3,4 | | | UEP9D | UEPQ4 | 1.36 | 104.41 | 67.93 | | | | | | | | |
| | 2-Wire Voice Grade Port (Centrex/differ SWC /EBS-M5208)2,3,4 | | | UEP9D | UEPQ5 | 1.36 | 104.41 | 67.93 | | | | | | | | |
| | 2-Wire Voice Grade Port (Centrex/differ SWC /EBS-M5216)2,3,4 | | | UEP9D | UEPQ6 | 1.36 | 104.41 | 67.93 | | | | | | | | |
| | 2-Wire Voice Grade Port (Centrex/differ SWC /EBS-M5316)2,3,4 | | | UEP9D | UEPQ7 | 1.36 | 104.41 | 67.93 | | | | | | | | |
| | 2-Wire Voice Grade Port, Diff Serving Wire Center - 800 Service Term 2,3 | | | UEP9D | UEPQZ | 1.36 | 104.41 | 67.93 | | | | | | | | |
| | 2-Wire Voice Grade Port terminated in on Megalink or equivalent | | | UEP9D | UEPQ9 | 1.36 | 38.85 | 19.08 | | | | | | | | |
| | 2-Wire Voice Grade Port Terminated on 800 Service Term | | | UEP9D | UEPQ2 | 1.36 | 38.85 | 19.08 | | | | | | | | |
| **Local Switching** | | | | | | | | | | | | | | | | |
| | Centrex Intercom Funtionality, per port | | | UEP9D | URECS | 0.8577 | | | | | | | | | | |
| **Local Number Portability** | | | | | | | | | | | | | | | | |
| | Local Number Portability (1 per port) | | | UEP9D | LNPCC | 0.35 | | | | | | | | | | |
| **Features** | | | | | | | | | | | | | | | | |
| | All Standard Features Offered, per port | | | UEP9D | UEPVF | 0.00 | | | | | | | | | | |
| | All Select Features Offered, per port | | | UEP9D | UEPVS | 0.00 | 412.25 | | | | | | | | | |
| | All Centrex Control Features Offered, per port | | | UEP9D | UEPVC | 0.00 | | | | | | | | | | |
| **NARS** | | | | | | | | | | | | | | | | |
| | Unbundled Network Access Register - Combination | | | UEP9D | UARCX | 0.00 | 0.00 | 0.00 | 0.00 | 0.00 | | | | | | |
| | Unbundled Network Access Register - Inward | | | UEP9D | UAR1X | 0.00 | 0.00 | 0.00 | 0.00 | 0.00 | | | | | | |
| | Unbundled Network Access Register - Outdial | | | UEP9D | UAROX | 0.00 | 0.00 | 0.00 | 0.00 | 0.00 | | | | | | |
| **Miscellaneous Terminations** | | | | | | | | | | | | | | | | |
| **2-Wire Trunk Side** | | | | | | | | | | | | | | | | |
| | Trunk Side Terminations, each | | | UEP9D | CEND6 | 8.29 | 115.85 | 18.20 | | | | | | | | |
| **4-Wire Digital (1.544 Megabits)** | | | | | | | | | | | | | | | | |
| | DS1 Circuit Terminations, each | | | UEP9D | M1HD1 | 68.47 | 196.18 | 98.62 | | | | | | | | |
| | DS0 Channels Activiated per Channel | | | UEP9D | M1HDO | 0.00 | 14.06 | | | | | | | | | |
| **Interoffice Channel Mileage - 2-Wire** | | | | | | | | | | | | | | | | |
| | Interoffice Channel Facilities Termination | | | UEP9D | M1GBC | 22.60 | 39.36 | 26.62 | | | | | | | | |
| | Interoffice Channel mileage, per mile or fraction of mile | | | UEP9D | M1GBM | 0.013 | | | | | | | | | | |
| **Feature Activations (DS0) Centrex Loops on Channelized DS1 Service** | | | | | | | | | | | | | | | | |
| **D4 Channel Bank Feature Activations** | | | | | | | | | | | | | | | | |
| | Feature Activation on D-4 Channel Bank Centrex Loop Slot | | | UEP9D | 1PQWS | 0.6497 | | | | | | | | | | |
| | Feature Activation on D-4 Channel Bank FX line Side Loop Slot | | | UEP9D | 1PQW6 | 0.6497 | | | | | | | | | | |
| | Feature Activation on D-4 Channel Bank FX Trunk Side Loop Slot | | | UEP9D | 1PQW7 | 0.6497 | | | | | | | | | | |
| | Feature Activation on D-4 Channel Bank Centrex Loop Slot - Different Wire Center | | | UEP9D | 1PQWP | 0.6497 | | | | | | | | | | |

| UNBUNDLED NETWORK ELEMENTS - Louisiana | | | | | | | | | | | | | Attachment: 2 | | Exhibit: A | |
|---|---|---|---|---|---|---|---|---|---|---|---|---|---|---|---|---|
| CATEGORY | RATE ELEMENTS | Interim | Zone | BCS | USOC | RATES ($) | | | | | Svc Order Submitted Elec per LSR | Svc Order Submitted Manually per LSR | Incremental Charge - Manual Svc Order vs. Electronic-1st | Incremental Charge - Manual Svc Order vs. Electronic-Add'l | Incremental Charge - Manual Svc Order vs. Electronic-Disc 1st | Incremental Charge - Manual Svc Order vs. Electronic-Disc Add'l |
| | | | | | | Rec | Nonrecurring | | Nonrecurring Disconnect | | OSS Rates ($) | | | | | |
| | | | | | | | First | Add'l | First | Add'l | SOMEC | SOMAN | SOMAN | SOMAN | SOMAN | SOMAN |
| | Feature Activation on D-4 Channel Bank Private Line Loop Slot | | | UEP9D | 1PQWV | 0.6497 | | | | | | | | | | |
| | Feature Activation on D-4 Channel Bank Tjie Line/Trunk Loop Slot | | | UEP9D | 1PQWQ | 0.6497 | | | | | | | | | | |
| | Feature Activation on D-4 Channel Bank WATS Loop Slot | | | UEP9D | 1PQWA | 0.6497 | | | | | | | | | | |
| **Non-Recurring Charges (NRC) Associated with UNE-P Centrex** | | | | | | | | | | | | | | | | |
| | NRC Conversion Currently Combined Switch-As-Is with allowed changes, per port | | | UEP9D | USAC2 | | 0.10 | 0.10 | | | | | | | | |
| | Conversion of existing Centrex Common Block, each | | | UEP9D | USACN | | 36.66 | 16.10 | | | | | | | | |
| | New Centrex Standard Common Block | | | UEP9D | M1ACS | 0.00 | 680.40 | | | | | | | | | |
| | New Centrex Customized Common Block | | | UEP9D | M1ACC | 0.00 | 680.40 | | | | | | | | | |
| | NAR Establishment Charge, Per Occasion | | | UEP9D | URECA | 0.00 | 73.93 | | | | | | | | | |
| **Additional Non-Recurring Charges (NRC)** | | | | | | | | | | | | | | | | |
| | Unbundled Miscellaneous Rate Element, Tag Loop at End Use Premise | | | UEP9D | URETL | | 8.33 | 0.83 | | | | | | | | |
| | Unbundled Miscellaneous Rate Element, Tag Design Loop at End Use Premise | | | UEP9D | URETN | | 11.20 | 1.10 | | | | | | | | |
| **UNE-P CENTREX - EWSD (Valid in AL, FL, KY, LA, MS & TN)** | | | | | | | | | | | | | | | | |
| **2-Wire VG Loop/2-Wire Voice Grade Port (Centrex) Combo** | | | | | | | | | | | | | | | | |
| **UNE Port/Loop Combination Rates (Non-Design)** | | | | | | | | | | | | | | | | |
| | 2-Wire VG Loop/2-Wire Voice Grade Port (Centrex) Port Combo - Non-Design | | 1 | UEP9E | | 13.13 | | | | | | | | | | |
| | 2-Wire VG Loop/2-Wire Voice Grade Port (Centrex)Port Combo - Non-Design | | 2 | UEP9E | | 23.75 | | | | | | | | | | |
| | 2-Wire VG Loop/2-Wire Voice Grade Port (Centrex)Port Combo - Non-Design | | 3 | UEP9E | | 49.62 | | | | | | | | | | |
| **UNE Port/Loop Combination Rates (Design)** | | | | | | | | | | | | | | | | |
| | 2-Wire VG Loop/2-Wire Voice Grade Port (Centrex) Port Combo - Design | | 1 | UEP9E | | 16.29 | | | | | | | | | | |
| | 2-Wire VG Loop/2-Wire Voice Grade Port (Centrex)Port Combo - Design | | 2 | UEP9E | | 26.71 | | | | | | | | | | |
| | 2-Wire VG Loop/2-Wire Voice Grade Port (Centrex)Port Combo - Design | | 3 | UEP9E | | 51.82 | | | | | | | | | | |
| **UNE Loop Rate** | | | | | | | | | | | | | | | | |
| | 2-Wire Voice Grade Loop (SL 1) - Zone 1 | | 1 | UEP9E | UECS1 | 11.77 | | | | | | | | | | |
| | 2-Wire Voice Grade Loop (SL 1) - Zone 2 | | 2 | UEP9E | UECS1 | 22.39 | | | | | | | | | | |
| | 2-Wire Voice Grade Loop (SL 1) - Zone 3 | | 3 | UEP9E | UECS1 | 48.26 | | | | | | | | | | |
| | 2-Wire Voice Grade Loop (SL 2) - Zone 1 | | 1 | UEP9E | UECS2 | 14.93 | | | | | | | | | | |
| | 2-Wire Voice Grade Loop (SL 2) - Zone 2 | | 2 | UEP9E | UECS2 | 25.35 | | | | | | | | | | |
| | 2-Wire Voice Grade Loop (SL 2) - Zone 3 | | 3 | UEP9E | UECS2 | 50.46 | | | | | | | | | | |
| **UNE Port Rate** | | | | | | | | | | | | | | | | |
| **AL, FL, KY, LA, MS, & TN only** | | | | | | | | | | | | | | | | |
| | 2-Wire Voice Grade Port (Centrex ) Basic Local Area | | | UEP9E | UEPYA | 1.36 | 38.85 | 19.08 | | | | | | | | |
| | 2-Wire Voice Grade Port (Centrex 800 termination)Basic Local Area | | | UEP9E | UEPYB | 1.36 | 38.85 | 19.08 | | | | | | | | |
| | 2-Wire Voice Grade Port (Centrex with Caller ID)1Basic Local Area | | | UEP9E | UEPYH | 1.36 | 38.85 | 19.08 | | | | | | | | |
| | 2-Wire Voice Grade Port (Centrex from diff Serving Wire Center)2,3 Basic Local Area | | | UEP9E | UEPYM | 1.36 | 104.41 | 67.93 | | | | | | | | |
| | 2-Wire Voice Grade Port, Diff Serving Wire Center 2,3 - 800 Service Term - Basic Local Area | | | UEP9E | UEPYZ | 1.36 | 104.41 | 67.93 | | | | | | | | |
| | 2-Wire Voice Grade Port terminated in on Megalink or equivalent - Basic Local Area | | | UEP9E | UEPY9 | 1.36 | 38.85 | 19.08 | | | | | | | | |
| | 2-Wire Voice Grade Port Terminated on 800 Service Term - Basic Local Area | | | UEP9E | UEPY2 | 1.36 | 38.85 | 19.08 | | | | | | | | |
| **AL, KY, LA, MS, & TN Only** | | | | | | | | | | | | | | | | |
| | 2-Wire Voice Grade Port (Centrex ) | | | UEP9E | UEPQA | 1.36 | 38.85 | 19.08 | | | | | | | | |
| | 2-Wire Voice Grade Port (Centrex 800 termination) | | | UEP9E | UEPQB | 1.36 | 38.85 | 19.08 | | | | | | | | |
| | 2-Wire Voice Grade Port (Centrex with Caller ID)1 | | | UEP9E | UEPQH | 1.36 | 38.85 | 19.08 | | | | | | | | |

| UNBUNDLED NETWORK ELEMENTS - Louisiana | | | | | | | | | | | | | | Attachment: 2 | | Exhibit: A | |
|---|---|---|---|---|---|---|---|---|---|---|---|---|---|---|---|---|---|
| CATEGORY | | RATE ELEMENTS | Interim | Zone | BCS | USOC | RATES ($) | | | | | Svc Order Submitted Elec per LSR | Svc Order Submitted Manually per LSR | Incremental Charge - Manual Svc Order vs. Electronic-1st | Incremental Charge - Manual Svc Order vs. Electronic-Add'l | Incremental Charge - Manual Svc Order vs. Electronic-Disc 1st | Incremental Charge - Manual Svc Order vs. Electronic-Disc Add'l |
| | | | | | | | Rec | Nonrecurring | | Nonrecurring Disconnect | | OSS Rates ($) | | | | | |
| | | | | | | | | First | Add'l | First | Add'l | SOMEC | SOMAN | SOMAN | SOMAN | SOMAN | SOMAN |
| | | 2-Wire Voice Grade Port (Centrex from diff Serving Wire Center)2,3 | | | UEP9E | UEPQM | 1.36 | 104.41 | 67.93 | | | | | | | | |
| | | 2-Wire Voice Grade Port, Diff Serving Wire Center 2,3 - 800 Service Term | | | UEP9E | UEPQZ | 1.36 | 104.41 | 67.93 | | | | | | | | |
| | | 2-Wire Voice Grade Port terminated in on Megalink or equivalent | | | UEP9E | UEPQ9 | 1.36 | 38.85 | 19.08 | | | | | | | | |
| | | 2-Wire Voice Grade Port Terminated on 800 Service Term | | | UEP9E | UEPQ2 | 1.36 | 38.85 | 19.08 | | | | | | | | |
| | **Local Switching** | | | | | | | | | | | | | | | | |
| | | Centrex Intercom Funtionality, per port | | | UEP9E | URECS | 0.8577 | | | | | | | | | | |
| | **Local Number Portability** | | | | | | | | | | | | | | | | |
| | | Local Number Portability (1 per port) | | | UEP9E | LNPCC | 0.35 | | | | | | | | | | |
| | **Features** | | | | | | | | | | | | | | | | |
| | | All Standard Features Offered, per port | | | UEP9E | UEPVF | 0.00 | | | | | | | | | | |
| | | All Select Features Offered, per port | | | UEP9E | UEPVS | 0.00 | 412.25 | | | | | | | | | |
| | | All Centrex Control Features Offered, per port | | | UEP9E | UEPVC | 0.00 | | | | | | | | | | |
| | **NARS** | | | | | | | | | | | | | | | | |
| | | Unbundled Network Access Register - Combination | | | UEP9E | UARCX | 0.00 | 0.00 | 0.00 | 0.00 | 0.00 | | | | | | |
| | | Unbundled Network Access Register - Indial | | | UEP9E | UAR1X | 0.00 | 0.00 | 0.00 | 0.00 | 0.00 | | | | | | |
| | | Unbundled Network Access Register - Outdial | | | UEP9E | UAROX | 0.00 | 0.00 | 0.00 | 0.00 | 0.00 | | | | | | |
| | **Miscellaneous Terminations** | | | | | | | | | | | | | | | | |
| | **2-Wire Trunk Side** | | | | | | | | | | | | | | | | |
| | | Trunk Side Terminations, each | | | UEP9E | CEND6 | 8.29 | 115.85 | 18.20 | | | | | | | | |
| | **4-Wire Digital (1.544 Megabits)** | | | | | | | | | | | | | | | | |
| | | DS1 Circuit Terminations, each | | | UEP9E | M1HD1 | 68.47 | 196.18 | 92.92 | | | | | | | | |
| | | DS0 Channel Activated Per Channel | | | UEP9E | M1HDO | 0.00 | 14.06 | | | | | | | | | |
| | **Interoffice Channel Mileage - 2-Wire** | | | | | | | | | | | | | | | | |
| | | Interoffice Channel Facilities Termination | | | UEP9E | M1GBC | 22.60 | 39.36 | 26.62 | | | | | | | | |
| | | Interoffice Channel mileage, per mile or fraction of mile | | | UEP9E | M1GBM | 0.013 | | | | | | | | | | |
| | **Feature Activations (DS0) Centrex Loops on Channelized DS1 Service** | | | | | | | | | | | | | | | | |
| | **D4 Channel Bank Feature Activations** | | | | | | | | | | | | | | | | |
| | | Feature Activation on D-4 Channel Bank Centrex Loop Slot | | | UEP9E | 1PQWS | 0.6497 | | | | | | | | | | |
| | | Feature Activation on D-4 Channel Bank FX line Side Loop Slot | | | UEP9E | 1PQW6 | 0.6497 | | | | | | | | | | |
| | | Feature Activation on D-4 Channel Bank FX Trunk Side Loop Slot | | | UEP9E | 1PQW7 | 0.6497 | | | | | | | | | | |
| | | Feature Activation on D-4 Channel Bank Centrex Loop Slot - Different Wire Center | | | UEP9E | 1PQWP | 0.6497 | | | | | | | | | | |
| | | Feature Activation on D-4 Channel Bank Private Line Loop Slot | | | UEP9E | 1PQWV | 0.6497 | | | | | | | | | | |
| | | Feature Activation on D-4 Channel Bank Tjie Line/Trunk Loop Slot | | | UEP9E | 1PQWQ | 0.6497 | | | | | | | | | | |
| | | Feature Activation on D-4 Channel Bank WATS Loop Slot | | | UEP9E | 1PQWA | 0.6497 | | | | | | | | | | |
| | **Non-Recurring Charges (NRC) Associated with UNE-P Centrex** | | | | | | | | | | | | | | | | |
| | | NRC Conversion Currently Combined Switch-As-Is with allowed changes, per port | | | UEP9E | USAC2 | | 0.10 | 0.10 | | | | | | | | |
| | | Conversion of Existing Centrex Common Block, each | | | UEP9E | USACN | | 36.66 | 16.10 | | | | | | | | |
| | | New Centrex Standard Common Block | | | UEP9E | M1ACS | 0.00 | 680.40 | | | | | | | | | |
| | | New Centrex Customized Common Block | | | UEP9E | M1ACC | 0.00 | 680.40 | | | | | | | | | |
| | | NAR Establishment Charge, Per Occasion | | | UEP9E | URECA | 0.00 | 73.93 | | | | | | | | | |
| | **Additional Non-Recurring Charges (NRC)** | | | | | | | | | | | | | | | | |
| | | Unbundled Miscellaneous Rate Element, Tag Loop at End Use Premise | | | UEP9E | URETL | | 8.33 | 0.83 | | | | | | | | |
| | | Unbundled Miscellaneous Rate Element, Tag Design Loop at End Use Premise | | | UEP9E | URETN | | 11.20 | 1.10 | | | | | | | | |
| | **UNE-P CENTREX - DCO - Valid in AL, KY, LA, MS, & TN)** | | | | | | | | | | | | | | | | |
| | **2-Wire VG Loop/2-Wire Voice Grade Port (Centrex) Combo** | | | | | | | | | | | | | | | | |
| | **UNE Port/Loop Combination Rates (Non-Design)** | | | | | | | | | | | | | | | | |
| | | 2-Wire VG Loop/2-Wire Voice Grade Port (Centrex) Port Combo - Non-Design | | 1 | UEP93 | | 13.13 | | | | | | | | | | |

| UNBUNDLED NETWORK ELEMENTS - Louisiana | | | | | | | | | | | | | Attachment: 2 | | Exhibit: A | |
|---|---|---|---|---|---|---|---|---|---|---|---|---|---|---|---|---|
| CATEGORY | RATE ELEMENTS | Interim | Zone | BCS | USOC | RATES ($) | | | | | Svc Order Submitted Elec per LSR | Svc Order Submitted Manually per LSR | Incremental Charge - Manual Svc Order vs. Electronic-1st | Incremental Charge - Manual Svc Order vs. Electronic-Add'l | Incremental Charge - Manual Svc Order vs. Electronic-Disc 1st | Incremental Charge - Manual Svc Order vs. Electronic-Disc Add'l |
| | | | | | | Rec | Nonrecurring | | Nonrecurring Disconnect | | OSS Rates ($) | | | | | |
| | | | | | | | First | Add'l | First | Add'l | SOMEC | SOMAN | SOMAN | SOMAN | SOMAN | SOMAN |
| | 2-Wire VG Loop/2-Wire Voice Grade Port (Centrex)Port Combo - Non-Design | | 2 | UEP93 | | 23.75 | | | | | | | | | | |
| | 2-Wire VG Loop/2-Wire Voice Grade Port (Centrex)Port Combo - Non-Design | | 3 | UEP93 | | 49.62 | | | | | | | | | | |
| **UNE Port/Loop Combination Rates (Design)** | | | | | | | | | | | | | | | | |
| | 2-Wire VG Loop/2-Wire Voice Grade Port (Centrex) Port Combo - Design | | 1 | UEP93 | | 16.29 | | | | | | | | | | |
| | 2-Wire VG Loop/2-Wire Voice Grade Port (Centrex)Port Combo - Design | | 2 | UEP93 | | 26.71 | | | | | | | | | | |
| | 2-Wire VG Loop/2-Wire Voice Grade Port (Centrex)Port Combo - Design | | 3 | UEP93 | | 51.82 | | | | | | | | | | |
| **UNE Loop Rate** | | | | | | | | | | | | | | | | |
| | 2-Wire Voice Grade Loop (SL 1) - Zone 1 | | 1 | UEP93 | UECS1 | 11.77 | | | | | | | | | | |
| | 2-Wire Voice Grade Loop (SL 1) - Zone 2 | | 2 | UEP93 | UECS1 | 22.36 | | | | | | | | | | |
| | 2-Wire Voice Grade Loop (SL 1) - Zone 3 | | 3 | UEP93 | UECS1 | 48.26 | | | | | | | | | | |
| | 2-Wire Voice Grade Loop (SL 2) - Zone 1 | | 1 | UEP93 | UECS2 | 14.93 | | | | | | | | | | |
| | 2-Wire Voice Grade Loop (SL 2) - Zone 2 | | 2 | UEP93 | UECS2 | 25.35 | | | | | | | | | | |
| | 2-Wire Voice Grade Loop (SL 2) - Zone 3 | | 3 | UEP93 | UECS2 | 50.46 | | | | | | | | | | |
| **UNE Port Rate** | | | | | | | | | | | | | | | | |
| **AL, KY, LA, MS, & TN only** | | | | | | | | | | | | | | | | |
| | 2-Wire Voice Grade Port (Centrex ) Basic Local Area | | | UEP93 | UEPYA | 1.36 | 38.85 | 19.08 | | | | | | | | |
| | 2-Wire Voice Grade Port (Centrex 800 termination)Basic Local Area | | | UEP93 | UEPYB | 1.36 | 38.85 | 19.08 | | | | | | | | |
| | 2-Wire Voice Grade Port (Centrex with Caller ID)1Basic Local Area | | | UEP93 | UEPYH | 1.36 | 38.85 | 19.08 | | | | | | | | |
| | 2-Wire Voice Grade Port (Centrex from diff Serving Wire Center)2,3 Basic Local Area | | | UEP93 | UEPYM | 1.36 | 104.41 | 67.93 | | | | | | | | |
| | 2-Wire Voice Grade Port, Diff Serving Wire Center - 2,3 - 800 Service Term - Basic Local Area | | | UEP93 | UEPYZ | 1.36 | 104.41 | 67.93 | | | | | | | | |
| | 2-Wire Voice Grade Port terminated in on Megalink or equivalent - Basic Local Area | | | UEP93 | UEPY9 | 1.36 | 38.85 | 19.08 | | | | | | | | |
| | 2-Wire Voice Grade Port Terminated on 800 Service Term - Basic Local Area | | | UEP93 | UEPY2 | 1.36 | 38.85 | 19.08 | | | | | | | | |
| | 2-Wire Voice Grade Port (Centrex ) | | | UEP93 | UEPQA | 1.36 | 38.85 | 19.08 | | | | | | | | |
| | 2-Wire Voice Grade Port (Centrex 800 termination) | | | UEP93 | UEPQB | 1.36 | 38.85 | 19.08 | | | | | | | | |
| | 2-Wire Voice Grade Port (Centrex with Caller ID)1 | | | UEP93 | UEPQH | 1.36 | 38.85 | 19.08 | | | | | | | | |
| | 2-Wire Voice Grade Port (Centrex from diff Serving Wire Center)2,3 | | | UEP93 | UEPQM | 1.36 | 104.41 | 67.93 | | | | | | | | |
| | 2-Wire Voice Grade Port, Diff Serving Wire Center - 2,3 -800 Service Term | | | UEP93 | UEPQZ | 1.36 | 104.41 | 67.93 | | | | | | | | |
| | 2-Wire Voice Grade Port terminated in on Megalink or equivalent | | | UEP93 | UEPQ9 | 1.36 | 38.85 | 19.08 | | | | | | | | |
| | 2-Wire Voice Grade Port Terminated on 800 Service Term | | | UEP93 | UEPQ2 | 1.36 | 38.85 | 19.08 | | | | | | | | |
| **Local Switching** | | | | | | | | | | | | | | | | |
| | Centrex Intercom Funtionality, per port | | | UEP93 | URECS | 0.8577 | | | | | | | | | | |
| **Local Number Portability** | | | | | | | | | | | | | | | | |
| | Local Number Portability (1 per port) | | | UEP93 | LNPCC | 0.35 | | | | | | | | | | |
| **Features** | | | | | | | | | | | | | | | | |
| | All Standard Features Offered, per port | | | UEP93 | UEPVF | 0.00 | 73.93 | 27.14 | | | | | | | | |
| | All Centrex Control Features Offered, per port | | | UEP93 | UEPVC | 0.00 | 73.93 | 27.14 | | | | | | | | |
| **NARS** | | | | | | | | | | | | | | | | |
| | Unbundled Network Access Register - Combination | | | UEP93 | UARCX | 0.00 | 0.00 | 0.00 | 0.00 | 0.00 | | | | | | |
| | Unbundled Network Access Register - Indial | | | UEP93 | UAR1X | 0.00 | 0.00 | 0.00 | 0.00 | 0.00 | | | | | | |
| | Unbundled Network Access Register - Outdial | | | UEP93 | UAROX | 0.00 | 0.00 | 0.00 | 0.00 | 0.00 | | | | | | |
| **Miscellaneous Terminations** | | | | | | | | | | | | | | | | |
| **2-Wire Trunk Side** | | | | | | | | | | | | | | | | |
| | Trunk Side Terminations, each | | | UEP93 | CEND6 | 8.27 | 115.85 | 18.20 | | | | | | | | |
| **4-Wire Digital (1.544 Megabits)** | | | | | | | | | | | | | | | | |
| | DS1 Circuit Terminations, each | | | UEP93 | M1HD1 | 68.47 | 196.18 | 92.92 | | | | | | | | |

## UNBUNDLED NETWORK ELEMENTS - Louisiana

| CATEGORY | RATE ELEMENTS | Interim | Zone | BCS | USOC | RATES ($) | | | | | Svc Order Submitted Elec per LSR | Svc Order Submitted Manually per LSR | Attachment: 2 Incremental Charge - Manual Svc Order vs. Electronic-1st | Attachment: 2 Incremental Charge - Manual Svc Order vs. Electronic-Add'l | Exhibit: A Incremental Charge - Manual Svc Order vs. Electronic-Disc 1st | Exhibit: A Incremental Charge - Manual Svc Order vs. Electronic-Disc Add'l |
|---|---|---|---|---|---|---|---|---|---|---|---|---|---|---|---|---|
| | | | | | | Rec | Nonrecurring | | Nonrecurring Disconnect | | OSS Rates ($) | | | | | |
| | | | | | | | First | Add'l | First | Add'l | SOMEC | SOMAN | SOMAN | SOMAN | SOMAN | SOMAN |
| | DS0 Channels Activated, Per Channel | | | UEP93 | M1HDO | 0.00 | 14.06 | | | | | | | | | |
| **Interoffice Channel Mileage - 2-Wire** | | | | | | | | | | | | | | | | |
| | Interoffice Channel Facilities Termination | | | UEP93 | M1GBC | 22.60 | 39.36 | 26.62 | | | | | | | | |
| | Interoffice Channel mileage, per mile or fraction of mile | | | UEP93 | M1GBM | 0.013 | | | | | | | | | | |
| **Feature Activations (DS0) Centrex Loops on Channelized DS1 Service** | | | | | | | | | | | | | | | | |
| **D4 Channel Bank Feature Activations** | | | | | | | | | | | | | | | | |
| | Feature Activation on D-4 Channel Bank Centrex Loop Slot | | | UEP93 | 1PQWS | 0.6497 | | | | | | | | | | |
| | Feature Activation on D-4 Channel Bank FX Line Side Loop Slot | | | UEP93 | 1PQW6 | 0.6497 | | | | | | | | | | |
| | Feature Activation on D-4 Channel Bank FX Trunk Side Loop Slot | | | UEP93 | 1PQW7 | 0.6497 | | | | | | | | | | |
| | Feature Activation on D-4 Channel Bank Centrex Loop Slot - Different Wire Center | | | UEP93 | 1PQWP | 0.6497 | | | | | | | | | | |
| | Feature Activation on D-4 Channel Bank Private Line Loop Slot | | | UEP93 | 1PQWV | 0.6497 | | | | | | | | | | |
| | Feature Activation on D-4 Channel Bank Tie Line/Trunk Loop Slot | | | UEP93 | 1PQWQ | 0.6497 | | | | | | | | | | |
| | Feature Activation on D-4 Channel Bank WATS Loop Slot | | | UEP93 | 1PQWA | 0.6497 | | | | | | | | | | |
| **Non-Recurring Charges (NRC) Associated with UNE-P Centrex** | | | | | | | | | | | | | | | | |
| | NRC Conversion Currently Combined Switch-As-Is with allowed changes, per port | | | UEP93 | USAC2 | | 0.10 | 0.10 | | | | | | | | |
| | Conversion of Existing Centrex Common Block, each | | | UEP93 | USACN | | 36.66 | 16.10 | | | | | | | | |
| | New Centrex Standard Common Block | | | UEP93 | M1ACS | 0.00 | 680.40 | | | | | | | | | |
| | New Centrex Customized Common Block | | | UEP93 | M1ACC | 0.00 | 680.40 | | | | | | | | | |
| | NAR Establishment Charge, Per Occasion | | | UEP93 | URECA | 0.00 | 73.93 | | | | | | | | | |
| **Additional Non-Recurring Charges (NRC)** | | | | | | | | | | | | | | | | |
| | Unbundled Miscellaneous Rate Element, Tag Loop at End Use Premise | | | UEP93 | URETL | | 8.33 | 0.83 | | | | | | | | |
| | Unbundled Miscellaneous Rate Element, Tag Design Loop at End Use Premise | | | UEP93 | URETN | | 11.20 | 1.10 | | | | | | | | |
| **Note 1 - Required Port for Centrex Control in 1AESS, 5ESS & EWSD** | | | | | | | | | | | | | | | | |
| **Note 2 - Requres Interoffice Channel Mileage** | | | | | | | | | | | | | | | | |
| **Note 3 - Installation is combination of Installation charge for SL2 Loop and Port** | | | | | | | | | | | | | | | | |
| **Note 4 - Requires Specific Customer Premises Equipment** | | | | | | | | | | | | | | | | |
| **Note: Rates displaying an "R" in Interim column are interim and subject to rate true-up as set forth in General Terms and Conditions.** | | | | | | | | | | | | | | | | |

| UNBUNDLED NETWORK ELEMENTS - Mississippi | | | | | | | | | | | | | | Attachment: 2 | | Exhibit: A | |
|---|---|---|---|---|---|---|---|---|---|---|---|---|---|---|---|---|---|
| CATEGORY | RATE ELEMENTS | Interim | Zone | BCS | USOC | RATES ($) | | | | | Svc Order Submitted Elec per LSR | Svc Order Submitted Manually per LSR | Incremental Charge - Manual Svc Order vs. Electronic- 1st | Incremental Charge - Manual Svc Order vs. Electronic- Add'l | Incremental Charge - Manual Svc Order vs. Electronic- Disc 1st | Incremental Charge - Manual Svc Order vs. Electronic- Disc Add'l |
| | | | | | | Rec | Nonrecurring | | Nonrecurring Disconnect | | OSS Rates ($) | | | | | |
| | | | | | | | First | Add'l | First | Add'l | SOMEC | SOMAN | SOMAN | SOMAN | SOMAN | SOMAN |
| | The "Zone" shown in the sections for stand-alone loops or loops as part of a combination refers to Geographically Deaveraged UNE Zones. To view Geographically Deaveraged UNE Zone Designations by Central Office, refer to Internet Website: http://www.interconnection.bellsouth.com/become_a_clec/html/interconnection.htm | | | | | | | | | | | | | | | |
| OPERATIONAL SUPPORT SYSTEMS (OSS) - "REGIONAL RATES" | | | | | | | | | | | | | | | | | |
| | NOTE: (1) CLEC should contact its contract negotiator if it prefers the "state specific" OSS charges as ordered by the State Commissions. The OSS charges currently contained in this rate exhibit are the BellSouth "regional" service ordering charges. CLEC may elect either the state specific Commission ordered rates for the service ordering charges, or CLEC may elect the regional service ordering charge, however, CLEC can not obtain a mixture of the two regardless if CLEC has a interconnection contract established in each of the 9 states. | | | | | | | | | | | | | | | |
| | NOTE: (2) Any element that can be ordered electronically will be billed according to the SOMEC rate listed in this category. Please refer to BellSouth's Local Ordering Handbook (LOH) to determine if a product can be ordered electronically. For those elements that cannot be ordered electronically at present per the LOH, the listed SOMEC rate in this category reflects the charge that would be billed to a CLEC once electronic ordering capabilities come on-line for that element. Otherwise, the manual ordering charge, SOMAN, will be applied to a CLECs bill when it submits an LSR to BellSouth. | | | | | | | | | | | | | | | |
| | OSS - Electronic Service Order Charge, Per Local Service Request (LSR) - UNE Only | | | | SOMEC | | 3.50 | 0.00 | 3.50 | 0.00 | | | | | | |
| | OSS - Manual Service Order Charge, Per Local Service Request (LSR) - UNE Only | | | | SOMAN | | 15.75 | 0.00 | 1.97 | 0.00 | | | | | | |
| UNE SERVICE DATE ADVANCEMENT CHARGE | | | | | | | | | | | | | | | | | |
| | NOTE: The Expedite charge will be maintained commensurate with BellSouth's FCC No.1 Tariff, Section 5 as applicable. | | | | | | | | | | | | | | | |
| | UNE Expedite Charge per Circuit or Line Assignable USOC, per Day | | | UAL, UEANL, UCL, UEF, UDF, UEQ, UDL, UENTW, UDN, UEA, UHL, ULC, USL, U1T12, U1T48, U1TD1, U1TD3, U1TDX, U1TO3, U1TS1, U1TVX, UC1BC, UC1BL, UC1CC, UC1CL, UC1DC, UC1DL, UC1EC, UC1EL, UC1FC, UC1FL, UC1GC, UC1GL, UC1HC, UC1HL, UDL12, UDL48, UDLO3, UDLSX, UE3, ULD12, ULD48, ULDD1, ULDD3, ULDDX, ULDO3, ULDS1, ULDVX, UNC1X, UNC3X, UNCDX, UNCNX, UNCSX, UNCVX, UNLD1, UNLD3, UXTD1, UXTD3, UXTS1, U1TUC, U1TUD, U1TUB, U1TUA | SDASP | | 200.00 | | | | | | | | | |
| UNBUNDLED EXCHANGE ACCESS LOOP | | | | | | | | | | | | | | | | | |
| | 2-WIRE ANALOG VOICE GRADE LOOP | | | | | | | | | | | | | | | | |
| | 2-Wire Analog Voice Grade Loop - Service Level 1- Zone 1 | | 1 | UEANL | UEAL2 | 12.03 | 37.92 | 17.55 | 23.48 | 5.25 | | | | | | |
| | 2-Wire Analog Voice Grade Loop - Service Level 1- Zone 2 | | 2 | UEANL | UEAL2 | 16.87 | 37.92 | 17.55 | 23.48 | 5.25 | | | | | | |
| | 2-Wire Analog Voice Grade Loop - Service Level 1- Zone 3 | | 3 | UEANL | UEAL2 | 25.68 | 37.92 | 17.55 | 23.48 | 5.25 | | | | | | |
| | 2-Wire Analog Voice Grade Loop - Service Level 1-Zone 4 | | 4 | UEANL | UEAL2 | 43.85 | 37.92 | 17.55 | 23.48 | 5.25 | | | | | | |
| | 2-Wire Analog Voice Grade Loop - Service Level 1- Zone 1 | | 1 | UEANL | UEASL | 12.03 | 37.92 | 17.55 | 23.48 | 5.25 | | | | | | |
| | 2-Wire Analog Voice Grade Loop - Service Level 1- Zone 2 | | 2 | UEANL | UEASL | 16.87 | 37.92 | 17.55 | 23.48 | 5.25 | | | | | | |
| | 2-Wire Analog Voice Grade Loop - Service Level 1- Zone 3 | | 3 | UEANL | UEASL | 25.68 | 37.92 | 17.55 | 23.48 | 5.25 | | | | | | |
| | 2-Wire Analog Voice Grade Loop - Service Level 1-Zone 4 | | 4 | UEANL | UEASL | 43.85 | 37.92 | 17.55 | 23.48 | 5.25 | | | | | | |
| | Unbundled Miscellaneous Rate Element, Tag Loop at End User Premise | | | UEANL | URETL | | 8.33 | 0.83 | | | | | | | | |
| | Loop Testing - Basic 1st Half Hour | | | UEANL | URET1 | | 34.36 | 34.36 | | | | | | | | |

## UNBUNDLED NETWORK ELEMENTS - Mississippi

| CATEGORY | RATE ELEMENTS | Interim | Zone | BCS | USOC | RATES ($) | | | | | Svc Order Submitted Elec per LSR | Svc Order Submitted Manually per LSR | Attachment: 2 | | Exhibit: A | |
|---|---|---|---|---|---|---|---|---|---|---|---|---|---|---|---|---|
| | | | | | | | | | | | | | Incremental Charge - Manual Svc Order vs. Electronic-1st | Incremental Charge - Manual Svc Order vs. Electronic-Add'l | Incremental Charge - Manual Svc Order vs. Electronic-Disc 1st | Incremental Charge - Manual Svc Order vs. Electronic-Disc Add'l |
| | | | | | | Rec | Nonrecurring | | Nonrecurring Disconnect | | OSS Rates ($) | | | | | |
| | | | | | | | First | Add'l | First | Add'l | SOMEC | SOMAN | SOMAN | SOMAN | SOMAN | SOMAN |
| | Loop Testing - Basic Additional Half Hour | | | UEANL | URETA | | 19.97 | 19.97 | | | | | | | | |
| | CLEC to CLEC Conversion Charge Without Outside Dispatch | | | UEANL | UREWO | | 15.75 | 8.92 | | | | | | | | |
| | Unbundled Voice Loop, Non-Design Voice Loop, billing for BST providing make-up (Engineering Information - E.I.) | | | UEANL | UEANM | | 13.51 | 13.51 | | | | | | | | |
| | Manual Order Coordination for UVL-SL1s (per loop) | | | UEANL | UEAMC | | 8.20 | 8.20 | | | | | | | | |
| | Order Coordination for Specified Conversion Time for UVL-SL1 (per LSR) | | | UEANL | OCOSL | | 18.19 | 18.19 | | | | | | | | |
| **2-WIRE Unbundled COPPER LOOP** | | | | | | | | | | | | | | | | |
| | 2-Wire Unbundled Copper Loop - Non-Designed Zone 1 | | 1 | UEQ | UEQ2X | 11.01 | 36.53 | 16.16 | 22.66 | 4.42 | | | | | | |
| | 2 Wire Unbundled Copper Loop - Non-Designed - Zone 2 | | 2 | UEQ | UEQ2X | 11.51 | 36.53 | 16.16 | 22.66 | 4.42 | | | | | | |
| | 2 Wire Unbundled Copper Loop - Non-Designed - Zone 3 | | 3 | UEQ | UEQ2X | 11.57 | 36.53 | 16.16 | 22.66 | 4.42 | | | | | | |
| | 2 Wire Unbundled Copper Loop - Non-Designed - Zone 4 | | 4 | UEQ | UEQ2X | 13.10 | 36.53 | 16.16 | 22.66 | 4.42 | | | | | | |
| | Unbundled Miscellaneous Rate Element, Tag Loop at End User Premise | | | UEQ | URETL | | 8.33 | 0.83 | | | | | | | | |
| | Manual Order Coordination 2 Wire Unbundled Copper Loop - Non-Designed (per loop) | | | UEQ | USBMC | | 8.20 | 8.20 | | | | | | | | |
| | Unbundled Copper Loop, Non-Design Copper Loop, billing for BST providing make-up (Engineering Information - E.I.) | | | UEQ | UEQMU | | 13.51 | 13.51 | | | | | | | | |
| | Loop Testing - Basic 1st Half Hour | | | UEQ | URET1 | | 34.36 | 34.36 | | | | | | | | |
| | Loop Testing - Basic Additional Half Hour | | | UEQ | URETA | | 19.97 | 19.97 | | | | | | | | |
| | CLEC to CLEC Conversion Charge Without Outside Dispatch | | | UEQ | UREWO | | 14.24 | 7.42 | | | | | | | | |
| **UNBUNDLED EXCHANGE ACCESS LOOP** | | | | | | | | | | | | | | | | |
| **2-WIRE ANALOG VOICE GRADE LOOP** | | | | | | | | | | | | | | | | |
| | 2 Wire Analog Voice Grade Loop-Service Level 1-Line Splitting-Zone 1 | | 1 | UEPSR UEPSB | UEALS | 12.03 | 37.92 | 17.55 | 23.48 | 5.25 | | | | | | |
| | 2 Wire Analog Voice Grade Loop-Service Level 1-Line Splitting-Zone 1 | | 1 | UEPSR UEPSB | UEABS | 12.03 | 37.92 | 17.55 | 23.48 | 5.25 | | | | | | |
| | 2 Wire Analog Voice Grade Loop- Service Level 1-Line Splitting-Zone 2 | | 2 | UEPSR UEPSB | UEALS | 16.87 | 37.92 | 17.55 | 23.48 | 5.25 | | | | | | |
| | 2 Wire Analog Voice Grade Loop- Service Level 1-Line Splitting-Zone 2 | | 2 | UEPSR UEPSB | UEABS | 16.87 | 37.92 | 17.55 | 23.48 | 5.25 | | | | | | |
| | 2 Wire Analog Voice Grade Loop-Service Level 1-Line Splitting-Zone 3 | | 3 | UEPSR UEPSB | UEALS | 25.68 | 37.92 | 17.55 | 23.48 | 5.25 | | | | | | |
| | 2 Wire Analog Voice Grade Loop-Service Level 1-Line Splitting-Zone 3 | | 3 | UEPSR UEPSB | UEABS | 25.68 | 37.92 | 17.55 | 23.48 | 5.25 | | | | | | |
| | 2 Wire Analog Voice Grade Loop-Service Level 1-Line Splitting-Zone 4 | | 4 | UEPSR UEPSB | UEALS | 43.85 | 37.92 | 17.55 | 23.48 | 5.25 | | | | | | |
| | 2 Wire Analog Voice Grade Loop-Service Level 1-Line Splitting-Zone 4 | | 4 | UEPSR UEPSB | UEABS | 43.85 | 37.92 | 17.55 | 23.48 | 5.25 | | | | | | |
| **UNBUNDLED EXCHANGE ACCESS LOOP** | | | | | | | | | | | | | | | | |
| **2-WIRE ANALOG VOICE GRADE LOOP** | | | | | | | | | | | | | | | | |
| | 2-Wire Analog Voice Grade Loop - Service Level 2 w/Loop or Ground Start Signaling - Zone 1 | | 1 | UEA | UEAL2 | 13.89 | 105.96 | 68.28 | 52.82 | 10.37 | | | | | | |
| | 2-Wire Analog Voice Grade Loop - Service Level 2 w/Loop or Ground Start Signaling - Zone 2 | | 2 | UEA | UEAL2 | 18.75 | 105.96 | 68.28 | 52.82 | 10.37 | | | | | | |
| | 2-Wire Analog Voice Grade Loop - Service Level 2 w/Loop or Ground Start Signaling - Zone 3 | | 3 | UEA | UEAL2 | 27.55 | 105.96 | 68.28 | 52.82 | 10.37 | | | | | | |
| | 2-Wire Analog Voice Grade Loop - Service Level 2 w/Loop or Ground Start Signaling - Zone 4 | | 4 | UEA | UEAL2 | 45.72 | 105.96 | 68.28 | 52.82 | 10.37 | | | | | | |
| | Order Coordination for Specified Conversion Time (per LSR) | | | UEA | OCOSL | | 18.19 | | | | | | | | | |
| | 2-Wire Analog Voice Grade Loop - Service Level 2 w/Reverse Battery Signaling - Zone 1 | | 1 | UEA | UEAR2 | 13.89 | 105.96 | 68.28 | 52.82 | 10.37 | | | | | | |
| | 2-Wire Analog Voice Grade Loop - Service Level 2 w/Reverse Battery Signaling - Zone 2 | | 2 | UEA | UEAR2 | 18.75 | 105.96 | 68.28 | 52.82 | 10.37 | | | | | | |
| | 2-Wire Analog Voice Grade Loop - Service Level 2 w/Reverse Battery Signaling - Zone 3 | | 3 | UEA | UEAR2 | 27.55 | 105.96 | 68.28 | 52.82 | 10.37 | | | | | | |
| | 2-Wire Analog Voice Grade Loop - Service Level 2 w/Reverse Battery Signaling - Zone 4 | | 4 | UEA | UEAR2 | 45.72 | 105.96 | 68.28 | 52.82 | 10.37 | | | | | | |
| | Order Coordination for Specified Conversion Time (per LSR) | | | UEA | OCOSL | | 18.19 | | | | | | | | | |

## UNBUNDLED NETWORK ELEMENTS - Mississippi

| CATEGORY | RATE ELEMENTS | Interim | Zone | BCS | USOC | RATES ($) | | | | | Svc Order Submitted Elec per LSR | Svc Order Submitted Manually per LSR | Attachment: 2 | | Exhibit: A | |
|---|---|---|---|---|---|---|---|---|---|---|---|---|---|---|---|---|
| | | | | | | | | | | | | | Incremental Charge - Manual Svc Order vs. Electronic-1st | Incremental Charge - Manual Svc Order vs. Electronic-Add'l | Incremental Charge - Manual Svc Order vs. Electronic-Disc 1st | Incremental Charge - Manual Svc Order vs. Electronic-Disc Add'l |
| | | | | | | Rec | Nonrecurring | | Nonrecurring Disconnect | | OSS Rates ($) | | | | | |
| | | | | | | | First | Add'l | First | Add'l | SOMEC | SOMAN | SOMAN | SOMAN | SOMAN | SOMAN |
| | CLEC to CLEC Conversion Charge without outside dispatch | | | UEA | UREWO | | 87.56 | 36.29 | | | | | | | | |
| | Loop Tagging - Service Level 2 (SL2) | | | UEA | URETL | | 11.19 | 1.10 | | | | | | | | |
| **4-WIRE ANALOG VOICE GRADE LOOP** | | | | | | | | | | | | | | | | |
| | 4-Wire Analog Voice Grade Loop - Zone 1 | | 1 | UEA | UEAL4 | 27.47 | 132.27 | 94.59 | 60.68 | 14.64 | | | | | | |
| | 4-Wire Analog Voice Grade Loop - Zone 2 | | 2 | UEA | UEAL4 | 38.26 | 132.27 | 94.59 | 60.68 | 14.64 | | | | | | |
| | 4-Wire Analog Voice Grade Loop - Zone 3 | | 3 | UEA | UEAL4 | 50.03 | 132.27 | 94.59 | 60.68 | 14.64 | | | | | | |
| | 4-Wire Analog Voice Grade Loop - Zone 4 | | 4 | UEA | UEAL4 | 50.03 | 132.27 | 94.59 | 60.68 | 14.64 | | | | | | |
| | Order Coordination for Specified Conversion Time (per LSR) | | | UEA | OCOSL | | 18.19 | | | | | | | | | |
| | CLEC to CLEC Conversion Charge without outside dispatch | | | UEA | UREWO | | 87.56 | 36.29 | | | | | | | | |
| **2-WIRE ISDN DIGITAL GRADE LOOP** | | | | | | | | | | | | | | | | |
| | 2-Wire ISDN Digital Grade Loop - Zone 1 | | 1 | UDN | U1L2X | 21.01 | 117.61 | 79.92 | 52.82 | 10.37 | | | | | | |
| | 2-Wire ISDN Digital Grade Loop - Zone 2 | | 2 | UDN | U1L2X | 27.59 | 117.61 | 79.92 | 52.82 | 10.37 | | | | | | |
| | 2-Wire ISDN Digital Grade Loop - Zone 3 | | 3 | UDN | U1L2X | 37.34 | 117.61 | 79.92 | 52.82 | 10.37 | | | | | | |
| | 2-Wire ISDN Digital Grade Loop - Zone 4 | | 4 | UDN | U1L2X | 59.18 | 117.61 | 79.92 | 52.82 | 10.37 | | | | | | |
| | Order Coordination For Specified Conversion Time (per LSR) | | | UDN | OCOSL | | 18.19 | | | | | | | | | |
| | CLEC to CLEC Conversion Charge without outside dispatch | | | UDN | UREWO | | 91.46 | 44.07 | | | | | | | | |
| **2-WIRE ASYMMETRICAL DIGITAL SUBSCRIBER LINE (ADSL) COMPATIBLE LOOP** | | | | | | | | | | | | | | | | |
| | 2 Wire Unbundled ADSL Loop including manual service inquiry & facility reservation - Zone 1 | | 1 | UAL | UAL2X | 11.11 | 121.27 | 70.81 | 50.38 | 7.93 | | | | | | |
| | 2 Wire Unbundled ADSL Loop including manual service inquiry & facility reservation - Zone 2 | | 2 | UAL | UAL2X | 11.47 | 121.27 | 70.81 | 50.38 | 7.93 | | | | | | |
| | 2 Wire Unbundled ADSL Loop including manual service inquiry & facility reservation - Zone 3 | | 3 | UAL | UAL2X | 11.74 | 121.27 | 70.81 | 50.38 | 7.93 | | | | | | |
| | 2 Wire Unbundled ADSL Loop including manual service inquiry & facility reservation - Zone 4 | | 4 | UAL | UAL2X | 12.69 | 121.27 | 70.81 | 50.38 | 7.93 | | | | | | |
| | Order Coordination for Specified Conversion Time (per LSR) | | | UAL | OCOSL | | 18.19 | | | | | | | | | |
| | 2 Wire Unbundled ADSL Loop without manual service inquiry & facility reservaton - Zone 1 | | 1 | UAL | UAL2W | 11.11 | 96.15 | 58.03 | 50.38 | 7.93 | | | | | | |
| | 2 Wire Unbundled ADSL Loop without manual service inquiry & facility reservaton - Zone 2 | | 2 | UAL | UAL2W | 11.47 | 96.15 | 58.03 | 50.38 | 7.93 | | | | | | |
| | 2 Wire Unbundled ADSL Loop without manual service inquiry & facility reservaton - Zone 3 | | 3 | UAL | UAL2W | 11.74 | 96.15 | 58.03 | 50.38 | 7.93 | | | | | | |
| | 2 Wire Unbundled ADSL Loop without manual service inquiry & facility reservaton - Zone 4 | | 4 | UAL | UAL2W | 12.69 | 96.15 | 58.03 | 50.38 | 7.93 | | | | | | |
| | Order Coordination for Specified Conversion Time (per LSR) | | | UAL | OCOSL | | 18.19 | | | | | | | | | |
| | CLEC to CLEC Conversion Charge without outside dispatch | | | UAL | UREWO | | 86.04 | 40.33 | | | | | | | | |
| **2-WIRE HIGH BIT RATE DIGITAL SUBSCRIBER LINE (HDSL) COMPATIBLE LOOP** | | | | | | | | | | | | | | | | |
| | 2 Wire Unbundled HDSL Loop including manual service inquiry & facility reservation - Zone 1 | | 1 | UHL | UHL2X | 8.75 | 129.98 | 79.52 | 50.38 | 7.93 | | | | | | |
| | 2 Wire Unbundled HDSL Loop including manual service inquiry & facility reservation - Zone 2 | | 2 | UHL | UHL2X | 9.22 | 129.98 | 79.52 | 50.38 | 7.93 | | | | | | |
| | 2 Wire Unbundled HDSL Loop including manual service inquiry & facility reservation - Zone 3 | | 3 | UHL | UHL2X | 9.87 | 129.98 | 79.52 | 50.38 | 7.93 | | | | | | |
| | 2 Wire Unbundled HDSL Loop including manual service inquiry & facility reservation - Zone 4 | | 4 | UHL | UHL2X | 10.46 | 129.98 | 79.52 | 50.38 | 7.93 | | | | | | |
| | Order Coordination for Specified Conversion Time (per LSR) | | | UHL | OCOSL | | 18.19 | | | | | | | | | |
| | 2 Wire Unbundled HDSL Loop without manual service inquiry and facility reservation - Zone 1 | | 1 | UHL | UHL2W | 8.75 | 104.86 | 66.74 | 50.38 | 7.93 | | | | | | |
| | 2 Wire Unbundled HDSL Loop without manual service inquiry and facility reservation - Zone 2 | | 2 | UHL | UHL2W | 9.22 | 104.86 | 66.74 | 50.38 | 7.93 | | | | | | |
| | 2 Wire Unbundled HDSL Loop without manual service inquiry and facility reservation - Zone 3 | | 3 | UHL | UHL2W | 9.87 | 104.86 | 66.74 | 50.38 | 7.93 | | | | | | |
| | 2 Wire Unbundled HDSL Loop without manual service inquiry and facility reservation - Zone 4 | | 4 | UHL | UHL2W | 10.46 | 104.86 | 66.74 | 50.38 | 7.93 | | | | | | |
| | Order Coordination for Specified Conversion Time (per LSR) | | | UHL | OCOSL | | 18.19 | | | | | | | | | |
| | CLEC to CLEC Conversion Charge without outside dispatch | | | UHL | UREWO | | 85.98 | 40.33 | | | | | | | | |
| **4-WIRE HIGH BIT RATE DIGITAL SUBSCRIBER LINE (HDSL) COMPATIBLE LOOP** | | | | | | | | | | | | | | | | |
| | 4 Wire Unbundled HDSL Loop including manual service inquiry and facility reservation - Zone 1 | | 1 | UHL | UHL4X | 13.78 | 158.74 | 108.28 | 56.72 | 10.68 | | | | | | |

| UNBUNDLED NETWORK ELEMENTS - Mississippi | | | | | | | | | | | | | | Attachment: 2 | | Exhibit: A | |
|---|---|---|---|---|---|---|---|---|---|---|---|---|---|---|---|---|---|
| CATEGORY | | RATE ELEMENTS | Interim | Zone | BCS | USOC | RATES ($) | | | | | Svc Order Submitted Elec per LSR | Svc Order Submitted Manually per LSR | Incremental Charge - Manual Svc Order vs. Electronic-1st | Incremental Charge - Manual Svc Order vs. Electronic-Add'l | Incremental Charge - Manual Svc Order vs. Electronic-Disc 1st | Incremental Charge - Manual Svc Order vs. Electronic-Disc Add'l |
| | | | | | | | Rec | Nonrecurring | | Nonrecurring Disconnect | | OSS Rates ($) | | | | | |
| | | | | | | | | First | Add'l | First | Add'l | SOMEC | SOMAN | SOMAN | SOMAN | SOMAN | SOMAN |
| | | 4-Wire Unbundled HDSL Loop including manual service inquiry and facility reservation - Zone 2 | | 2 | UHL | UHL4X | 13.43 | 158.74 | 108.28 | 56.72 | 10.68 | | | | | | |
| | | 4-Wire Unbundled HDSL Loop including manual service inquiry and facility reservation - Zone 3 | | 3 | UHL | UHL4X | 15.59 | 158.74 | 108.28 | 56.72 | 10.68 | | | | | | |
| | | 4-Wire Unbundled HDSL Loop including manual service inquiry and facility reservation - Zone 4 | | 4 | UHL | UHL4X | 14.46 | 158.74 | 108.28 | 56.72 | 10.68 | | | | | | |
| | | Order Coordination for Specified Conversion Time (per LSR) | | | UHL | OCOSL | | 18.19 | | | | | | | | | |
| | | 4-Wire Unbundled HDSL Loop without manual service inquiry and facility reservation - Zone 1 | | 1 | UHL | UHL4W | 13.78 | 133.62 | 95.50 | 56.72 | 10.68 | | | | | | |
| | | 4-Wire Unbundled HDSL Loop without manual service inquiry and facility reservation - Zone 2 | | 2 | UHL | UHL4W | 13.43 | 133.62 | 95.50 | 56.72 | 10.68 | | | | | | |
| | | 4-Wire Unbundled HDSL Loop without manual service inquiry and facility reservation - Zone 3 | | 3 | UHL | UHL4W | 15.59 | 133.62 | 95.50 | 56.72 | 10.68 | | | | | | |
| | | 4-Wire Unbundled HDSL Loop without manual service inquiry and facility reservation - Zone 4 | | 4 | UHL | UHL4W | 14.46 | 133.62 | 95.50 | 56.72 | 10.68 | | | | | | |
| | | Order Coordination for Specified Conversion Time (per LSR) | | | UHL | OCOSL | | 18.19 | | | | | | | | | |
| | | CLEC to CLEC Conversion Charge without outside dispatch | | | UHL | UREWO | | 85.98 | 40.33 | | | | | | | | |
| | **4-WIRE DS1 DIGITAL LOOP** | | | | | | | | | | | | | | | | |
| | | 4-Wire DS1 Digital Loop - Zone 1 | | 1 | USL | USLXX | 79.08 | 253.93 | 158.45 | 46.10 | 12.07 | | | | | | |
| | | 4-Wire DS1 Digital Loop - Zone 2 | | 2 | USL | USLXX | 129.38 | 253.93 | 158.45 | 46.10 | 12.07 | | | | | | |
| | | 4-Wire DS1 Digital Loop - Zone 3 | | 3 | USL | USLXX | 206.74 | 253.93 | 158.45 | 46.10 | 12.07 | | | | | | |
| | | 4-Wire DS1 Digital Loop - Zone 4 | | 4 | USL | USLXX | 458.46 | 253.93 | 158.45 | 46.10 | 12.07 | | | | | | |
| | | Order Coordination for Specified Conversion Time (per LSR) | | | USL | OCOSL | | 18.19 | | | | | | | | | |
| | | CLEC to CLEC Conversion Charge without outside dispatch | | | USL | UREWO | | 100.90 | 42.96 | | | | | | | | |
| | **4-WIRE 19.2, 56 OR 64 KBPS DIGITAL GRADE LOOP** | | | | | | | | | | | | | | | | |
| | | 4 Wire Unbundled Digital 19.2 Kbps | | 1 | UDL | UDL19 | 27.44 | 126.53 | 88.85 | 60.68 | 14.64 | | | | | | |
| | | 4 Wire Unbundled Digital 19.2 Kbps | | 2 | UDL | UDL19 | 34.55 | 126.53 | 88.85 | 60.68 | 14.64 | | | | | | |
| | | 4 Wire Unbundled Digital 19.2 Kbps | | 3 | UDL | UDL19 | 40.76 | 126.53 | 88.85 | 60.68 | 14.64 | | | | | | |
| | | 4 Wire Unbundled Digital 19.2 Kbps | | 4 | UDL | UDL19 | 32.25 | 126.53 | 88.85 | 60.68 | 14.64 | | | | | | |
| | | 4 Wire Unbundled Digital Loop 56 Kbps - Zone 1 | | 1 | UDL | UDL56 | 27.44 | 126.53 | 88.85 | 60.68 | 14.64 | | | | | | |
| | | 4 Wire Unbundled Digital Loop 56 Kbps - Zone 2 | | 2 | UDL | UDL56 | 34.55 | 126.53 | 88.85 | 60.68 | 14.64 | | | | | | |
| | | 4 Wire Unbundled Digital Loop 56 Kbps - Zone 3 | | 3 | UDL | UDL56 | 40.76 | 126.53 | 88.85 | 60.68 | 14.64 | | | | | | |
| | | 4 Wire Unbundled Digital Loop 56 Kbps - Zone 4 | | 4 | UDL | UDL56 | 32.25 | 126.53 | 88.85 | 60.68 | 14.64 | | | | | | |
| | | Order Coordination for Specified Conversion Time (per LSR) | | | UDL | OCOSL | | 18.19 | | | | | | | | | |
| | | 4 Wire Unbundled Digital Loop 64 Kbps - Zone 1 | | 1 | UDL | UDL64 | 27.44 | 126.53 | 88.85 | 60.68 | 14.64 | | | | | | |
| | | 4 Wire Unbundled Digital Loop 64 Kbps - Zone 2 | | 2 | UDL | UDL64 | 34.55 | 126.53 | 88.85 | 60.68 | 14.64 | | | | | | |
| | | 4 Wire Unbundled Digital Loop 64 Kbps - Zone 3 | | 3 | UDL | UDL64 | 40.76 | 126.53 | 88.85 | 60.68 | 14.64 | | | | | | |
| | | 4 Wire Unbundled Digital Loop 64 Kbps - Zone 4 | | 4 | UDL | UDL64 | 32.25 | 126.53 | 88.85 | 60.68 | 14.64 | | | | | | |
| | | Order Coordination for Specified Conversion Time (per LSR) | | | UDL | OCOSL | | 18.19 | | | | | | | | | |
| | | CLEC to CLEC Conversion Charge without outside dispatch | | | UDL | UREWO | | 101.94 | 49.66 | | | | | | | | |
| | **2-WIRE Unbundled COPPER LOOP** | | | | | | | | | | | | | | | | |
| | | 2-Wire Unbundled Copper Loop-Designed including manual service inquiry & facility reservation - Zone 1 | | 1 | UCL | UCLPB | 11.11 | 120.34 | 69.87 | 50.38 | 7.93 | | | | | | |
| | | 2-Wire Unbundled Copper Loop-Designed including manual service inquiry & facility reservation - Zone 2 | | 2 | UCL | UCLPB | 11.47 | 120.34 | 69.87 | 50.38 | 7.93 | | | | | | |
| | | 2 Wire Unbundled Copper Loop-Designed including manual service inquiry & facility reservation - Zone 3 | | 3 | UCL | UCLPB | 11.74 | 120.34 | 69.87 | 50.38 | 7.93 | | | | | | |
| | | 2 Wire Unbundled Copper Loop-Designed including manual service inquiry & facility reservation - Zone 4 | | 4 | UCL | UCLPB | 12.69 | 120.34 | 69.87 | 50.38 | 7.93 | | | | | | |
| | | Order Coordination for Unbundled Copper Loops (per loop) | | | UCL | UCLMC | | 8.20 | 8.20 | | | | | | | | |
| | | 2-Wire Unbundled Copper Loop-Designed without manual service inquiry and facility reservation - Zone 1 | | 1 | UCL | UCLPW | 11.11 | 95.21 | 57.09 | 50.38 | 7.93 | | | | | | |
| | | 2-Wire Unbundled Copper Loop-Designed without manual service inquiry and facility reservation - Zone 2 | | 2 | UCL | UCLPW | 11.47 | 95.21 | 57.09 | 50.38 | 7.93 | | | | | | |
| | | 2-Wire Unbundled Copper Loop-Designed without manual service inquiry and facility reservation - Zone 3 | | 3 | UCL | UCLPW | 11.74 | 95.21 | 57.09 | 50.38 | 7.93 | | | | | | |
| | | 2-Wire Unbundled Copper Loop-Designed without manual service inquiry and facility reservation - Zone 4 | | 4 | UCL | UCLPW | 12.69 | 95.21 | 57.09 | 50.38 | 7.93 | | | | | | |
| | | Order Coordination for Unbundled Copper Loops (per loop) | | | UCL | UCLMC | | 8.20 | 8.20 | | | | | | | | |

| UNBUNDLED NETWORK ELEMENTS - Mississippi | | | | | | | | | | | | | | Attachment: 2 | | Exhibit: A | |
|---|---|---|---|---|---|---|---|---|---|---|---|---|---|---|---|---|---|
| CATEGORY | | RATE ELEMENTS | Interim | Zone | BCS | USOC | RATES ($) | | | | | Svc Order Submitted Elec per LSR | Svc Order Submitted Manually per LSR | Incremental Charge - Manual Svc Order vs. Electronic-1st | Incremental Charge - Manual Svc Order vs. Electronic-Add'l | Incremental Charge - Manual Svc Order vs. Electronic-Disc 1st | Incremental Charge - Manual Svc Order vs. Electronic-Disc Add'l |
| | | | | | | | Rec | Nonrecurring | | Nonrecurring Disconnect | | OSS Rates ($) | | | | | |
| | | | | | | | | First | Add'l | First | Add'l | SOMEC | SOMAN | SOMAN | SOMAN | SOMAN | SOMAN |
| | | CLEC to CLEC Conversion Charge without outside dispatch (UCL-Des) | | | UCL | UREWO | | 95.21 | 42.40 | | | | | | | | |
| | 4-WIRE COPPER LOOP | | | | | | | | | | | | | | | | |
| | | 4-Wire Copper Loop-Designed including manual service inquiry and facility reservation - Zone 1 | | 1 | UCL | UCL4S | 17.30 | 144.68 | 94.22 | 56.72 | 10.68 | | | | | | |
| | | 4-Wire Copper Loop-Designed including manual service inquiry and facility reservation - Zone 2 | | 2 | UCL | UCL4S | 18.84 | 144.68 | 94.22 | 56.72 | 10.68 | | | | | | |
| | | 4-Wire Copper Loop-Designed including manual service inquiry and facility reservation - Zone 3 | | 3 | UCL | UCL4S | 21.33 | 144.68 | 94.22 | 56.72 | 10.68 | | | | | | |
| | | 4-Wire Copper Loop-Designed including manual service inquiry and facility reservation - Zone 4 | | 4 | UCL | UCL4S | 21.33 | 144.68 | 94.22 | 56.72 | 10.68 | | | | | | |
| | | Order Coordination for Unbundled Copper Loops (per loop) | | | UCL | UCLMC | | 8.20 | 8.20 | | | | | | | | |
| | | 4-Wire Copper Loop-Designed without manual service inquiry and facility reservation - Zone 1 | | 1 | UCL | UCL4W | 17.30 | 119.56 | 81.44 | 56.72 | 10.68 | | | | | | |
| | | 4-Wire Copper Loop-Designed without manual service inquiry and facility reservation - Zone 2 | | 2 | UCL | UCL4W | 18.84 | 119.56 | 81.44 | 56.72 | 10.68 | | | | | | |
| | | 4-Wire Copper Loop-Designed without manual service inquiry and facility reservation - Zone 3 | | 3 | UCL | UCL4W | 21.33 | 119.56 | 81.44 | 56.72 | 10.68 | | | | | | |
| | | 4-Wire Copper Loop-Designed without manual service inquiry and facility reservation - Zone 4 | | 4 | UCL | UCL4W | 21.33 | 119.56 | 81.44 | 56.72 | 10.68 | | | | | | |
| | | Order Coordination for Unbundled Copper Loops (per loop) | | | UCL | UCLMC | | 8.20 | 8.20 | | | | | | | | |
| | | CLEC to CLEC Conversion Charge without outside dispatch (UCL-Des) | | | UCL | UREWO | | 95.21 | 42.40 | | | | | | | | |
| LOOP MODIFICATION | | | | | | | | | | | | | | | | | |
| | | Unbundled Loop Modification, Removal of Load Coils - 2 Wire pair less than or equal to 18k ft, per Unbundled Loop | | | UAL, UHL, UCL, UEQ, ULS, UEA, UEANL, UEPSR, UEPSB | ULM2L | | 32.57 | 32.57 | | | | | | | | |
| | | Unbundled Loop Modification Removal of Load Coils - 4 Wire less than or equal to 18K ft, per Unbundled Loop | | | UHL, UCL, UEA | ULM4L | | 32.57 | 32.57 | | | | | | | | |
| | | Unbundled Loop Modification Removal of Bridged Tap Removal, per unbundled loop | | | UAL, UHL, UCL, UEQ, ULS, UEA, UEANL, UEPSR, UEPSB | ULMBT | | 32.59 | 32.59 | | | | | | | | |
| SUB-LOOPS | | | | | | | | | | | | | | | | | |
| | Sub-Loop Distribution | | | | | | | | | | | | | | | | |
| | | Sub-Loop - Per Cross Box Location - CLEC Feeder Facility Set-Up | I | | UEANL | USBSA | | 259.69 | | | | | | | | | |
| | | Sub-Loop - Per Cross Box Location - Per 25 Pair Panel Set-Up | I | | UEANL | USBSB | | 22.77 | | | | | | | | | |
| | | Sub-Loop - Per Building Equipment Room - CLEC Feeder Facility Set-Up | I | | UEANL | USBSC | | 178.47 | | | | | | | | | |
| | | Sub-Loop - Per Building Equipment Room - Per 25 Pair Panel Set-Up | I | | UEANL | USBSD | | 56.39 | | | | | | | | | |
| | | Sub-Loop Distribution Per 2-Wire Analog Voice Grade Loop - Zone 1 | I | 1 | UEANL | USBN2 | 7.15 | 66.18 | 31.14 | 45.36 | 6.71 | | | | | | |
| | | Sub-Loop Distribution Per 2-Wire Analog Voice Grade Loop - Zone 2 | I | 2 | UEANL | USBN2 | 9.51 | 66.18 | 31.14 | 45.36 | 6.71 | | | | | | |
| | | Sub-Loop Distribution Per 2-Wire Analog Voice Grade Loop - Zone 3 | I | 3 | UEANL | USBN2 | 12.45 | 66.18 | 31.14 | 45.36 | 6.71 | | | | | | |
| | | Sub-Loop Distribution Per 2-Wire Analog Voice Grade Loop - Zone 4 | | 4 | UEANL | USBN2 | 18.26 | 66.18 | 31.14 | 45.36 | 6.71 | | | | | | |
| | | Order Coordination for Unbundled Sub-Loops, per sub-loop pair | | | UEANL | USBMC | | 8.20 | 8.20 | | | | | | | | |
| | | Sub-Loop Distribution Per 4-Wire Analog Voice Grade Loop - Zone 1 | | 1 | UEANL | USBN4 | 7.30 | 79.49 | 44.45 | 51.27 | 9.35 | | | | | | |
| | | Sub-Loop Distribution Per 4-Wire Analog Voice Grade Loop - Zone 2 | | 2 | UEANL | USBN4 | 13.92 | 79.49 | 44.45 | 51.27 | 9.35 | | | | | | |

| UNBUNDLED NETWORK ELEMENTS - Mississippi | | | | | | | | | | | | | | Attachment: 2 | | Exhibit: A | |
|---|---|---|---|---|---|---|---|---|---|---|---|---|---|---|---|---|---|
| CATEGORY | | RATE ELEMENTS | Interim | Zone | BCS | USOC | RATES ($) | | | | | Svc Order Submitted Elec per LSR | Svc Order Submitted Manually per LSR | Incremental Charge - Manual Svc Order vs. Electronic-1st | Incremental Charge - Manual Svc Order vs. Electronic-Add'l | Incremental Charge - Manual Svc Order vs. Electronic-Disc 1st | Incremental Charge - Manual Svc Order vs. Electronic-Disc Add'l |
| | | | | | | | Rec | Nonrecurring | | Nonrecurring Disconnect | | OSS Rates ($) | | | | | |
| | | | | | | | | First | Add'l | First | Add'l | SOMEC | SOMAN | SOMAN | SOMAN | SOMAN | SOMAN |
| | | Sub-Loop Distribution Per 4-Wire Analog Voice Grade Loop - Zone 3 | | 3 | UEANL | USBN4 | 16.73 | 79.49 | 44.45 | 51.27 | 9.35 | | | | | | |
| | | Sub-Loop Distribution Per 4-Wire Analog Voice Grade Loop - Zone 4 | | 4 | UEANL | USBN4 | 16.73 | 79.49 | 44.45 | 51.27 | 9.35 | | | | | | |
| | | Order Coordination for Unbundled Sub-Loops, per sub-loop pair | | | UEANL | USBMC | | 8.20 | 8.20 | | | | | | | | |
| | | Sub-Loop 2-Wire Intrabuilding Network Cable (INC) | I | | UEANL | USBR2 | 2.29 | 53.32 | 18.28 | 45.36 | 6.71 | | | | | | |
| | | Order Coordination for Unbundled Sub-Loops, per sub-loop pair | | | UEANL | USBMC | | 8.20 | 8.20 | | | | | | | | |
| | | Sub-Loop 4-Wire Intrabuilding Network Cable (INC) | I | | UEANL | USBR4 | 4.40 | 59.60 | 24.55 | 51.27 | 9.35 | | | | | | |
| | | Order Coordination for Unbundled Sub-Loops, per sub-loop pair | | | UEANL | USBMC | | 8.20 | 8.20 | | | | | | | | |
| | | Loop Testing - Basic 1st Half Hour | | | UEANL | URET1 | | 34.36 | 34.36 | | | | | | | | |
| | | Loop Testing - Basic Additional Half Hour | | | UEANL | URETA | | 19.97 | 19.97 | | | | | | | | |
| | | 2 Wire Copper Unbundled Sub-Loop Distribution - Zone 1 | I | 1 | UEF | UCS2X | 6.06 | 66.18 | 31.14 | 45.36 | 6.71 | | | | | | |
| | | 2 Wire Copper Unbundled Sub-Loop Distribution - Zone 2 | I | 2 | UEF | UCS2X | 7.09 | 66.18 | 31.14 | 45.36 | 6.71 | | | | | | |
| | | 2 Wire Copper Unbundled Sub-Loop Distribution - Zone 3 | I | 3 | UEF | UCS2X | 8.16 | 66.18 | 31.14 | 45.36 | 6.71 | | | | | | |
| | | 2 Wire Copper Unbundled Sub-Loop Distribution - Zone 4 | | 4 | UEF | UCS2X | 9.90 | 66.18 | 31.14 | 45.36 | 6.71 | | | | | | |
| | | Order Coordination for Unbundled Sub-Loops, per sub-loop pair | | | UEF | USBMC | | 8.20 | 8.20 | | | | | | | | |
| | | 4 Wire Copper Unbundled Sub-Loop Distribution - Zone 1 | I | 1 | UEF | UCS4X | 5.10 | 79.49 | 44.45 | 51.27 | 9.35 | | | | | | |
| | | 4 Wire Copper Unbundled Sub-Loop Distribution - Zone 2 | I | 2 | UEF | UCS4X | 9.11 | 79.49 | 44.45 | 51.27 | 9.35 | | | | | | |
| | | 4 Wire Copper Unbundled Sub-Loop Distribution - Zone 3 | I | 3 | UEF | UCS4X | 14.00 | 79.49 | 44.45 | 51.27 | 9.35 | | | | | | |
| | | 4 Wire Copper Unbundled Sub-Loop Distribution - Zone 4 | | 4 | UEF | UCS4X | 14.00 | 79.49 | 44.45 | 51.27 | 9.35 | | | | | | |
| | | Order Coordination for Unbundled Sub-Loops, per sub-loop pair | | | UEF | USBMC | | 8.20 | 8.20 | | | | | | | | |
| | | Loop Testing - Basic 1st Half Hour | | | UEF | URET1 | | 34.36 | 34.36 | | | | | | | | |
| | | Loop Testing - Basic Additional Half Hour | | | UEF | URETA | | 19.97 | 19.97 | | | | | | | | |
| | **Unbundled Network Terminating Wire (UNTW)** | | | | | | | | | | | | | | | | |
| | | Unbundled Network Terminating Wire (UNTW) per Pair | | | UENTW | UENPP | 0.3366 | 30.55 | | | | | | | | | |
| | **Network Interface Device (NID)** | | | | | | | | | | | | | | | | |
| | | Network Interface Device (NID) - 1-2 lines | | | UENTW | UND12 | | 43.84 | 28.90 | | | | | | | | |
| | | Network Interface Device (NID) - 1-6 lines | | | UENTW | UND16 | | 65.30 | 50.36 | | | | | | | | |
| | | Network Interface Device Cross Connect - 2 W | | | UENTW | UNDC2 | | 5.94 | 5.94 | | | | | | | | |
| | | Network Interface Device Cross Connect - 4W | | | UENTW | UNDC4 | | 5.94 | 5.94 | | | | | | | | |
| **UNE OTHER, PROVISIONING ONLY - NO RATE** | | | | | | | | | | | | | | | | | |
| | | NID - Dispatch and Service Order for NID installation | | | UENTW | UNDBX | 0.00 | 0.00 | | | | | | | | | |
| | | UNTW Circuit Id Establishment, Provisioning Only - No Rate | | | UENTW | UENCE | 0.00 | 0.00 | | | | | | | | | |
| | | Unbundled Contract Name, Provisioning Only - No Rate | | | UEANL,UEF,UEQ,UENTW | UNECN | 0.00 | 0.00 | | | | | | | | | |
| **UNE OTHER, PROVISIONING ONLY - NO RATE** | | | | | | | | | | | | | | | | | |
| | | Unbundled Contact Name, Provisioning Only - no rate | | | UAL,UCL,UDC,UDL,UDN,UEA,UHL,ULC | UNECN | 0.00 | 0.00 | | | | | | | | | |
| | | Unbundled Sub-Loop Feeder-2 Wire Cross Box Jumper - no rate | | | UEA,UDN,UCL,UDC | USBFQ | 0.00 | 0.00 | | | | | | | | | |
| | | Unbundled Sub-Loop Feeder-4 Wire Cross Box Jumper - no rate | | | UEA,USL,UCL,UDL | USBFR | 0.00 | 0.00 | | | | | | | | | |
| | | Unbundled DS1 Loop - Superframe Format Option - no rate | | | USL | CCOSF | 0.00 | 0.00 | | | | | | | | | |
| | | Unbundled DS1 Loop - Expanded Superframe Format option - no rate | | | USL | CCOEF | 0.00 | 0.00 | | | | | | | | | |
| **HIGH CAPACITY UNBUNDLED LOCAL LOOP** | | | | | | | | | | | | | | | | | |
| | | High Capacity Unbundled Local Loop - DS3 - Per Mile per month | | | UE3 | 1L5ND | 11.20 | | | | | | | | | | |
| | | High Capacity Unbundled Local Loop - DS3 - Facility Termination per month | | | UE3 | UE3PX | 326.15 | 454.13 | 265.47 | 123.23 | 86.19 | | | | | | |
| | | High Capacity Unbundled Local Loop - STS-1 - Per Mile per month | | | UDLSX | 1L5ND | 11.20 | | | | | | | | | | |

| UNBUNDLED NETWORK ELEMENTS - Mississippi | | | | | | | | | | | | | | Attachment: 2 | | Exhibit: A | |
|---|---|---|---|---|---|---|---|---|---|---|---|---|---|---|---|---|---|
| CATEGORY | | RATE ELEMENTS | Interim | Zone | BCS | USOC | RATES ($) | | | | | Svc Order Submitted Elec per LSR | Svc Order Submitted Manually per LSR | Incremental Charge - Manual Svc Order vs. Electronic-1st | Incremental Charge - Manual Svc Order vs. Electronic-Add'l | Incremental Charge - Manual Svc Order vs. Electronic-Disc 1st | Incremental Charge - Manual Svc Order vs. Electronic-Disc Add'l |
| | | | | | | | Rec | Nonrecurring | | Nonrecurring Disconnect | | OSS Rates ($) | | | | | |
| | | | | | | | | First | Add'l | First | Add'l | SOMEC | SOMAN | SOMAN | SOMAN | SOMAN | SOMAN |
| | | High Capacity Unbundled Local Loop - STS-1 - Facility Termination per month | | | UDLSX | UDLS1 | 338.55 | 454.13 | 265.47 | 123.23 | 86.19 | | | | | | |
| LOOP MAKE-UP | | | | | | | | | | | | | | | | | |
| | | Loop Makeup - Preordering Without Reservation, per working or spare facility queried (Manual). | | | UMK | UMKLW | | 24.12 | 24.12 | | | | | | | | |
| | | Loop Makeup - Preordering With Reservation, per spare facility queried (Manual). | | | UMK | UMKLP | | 25.58 | 25.58 | | | | | | | | |
| | | Loop Makeup--With or Without Reservation, per working or spare facility queried (Mechanized) | | | UMK | UMKMQ | | 0.6652 | 0.6652 | | | | | | | | |
| LINE SHARING AND LINE SPLITTING | | | | | | | | | | | | | | | | | |
| | | **NOTE 1: The Line Sharing monthly recurring rates for all installations completed from October 02, 2003 through midnight October 01, 2004 shall be billed as follows:** | | | | | | | | | | | | | | | |
| | | **NOTE 1: 10/02/2003 – 10/01/2004: 25% of the rate for an unbundled copper loop non-designed ("UCLND")** | | | | | | | | | | | | | | | |
| | | **NOTE 1: 10/02/2004 – 10/01/2005: 50% of the rate for UCLND** | | | | | | | | | | | | | | | |
| | | **NOTE 1: 10/02/2005 – 10/01/2006: 75% of the rate for UCLND** | | | | | | | | | | | | | | | |
| | | **NOTE 1: Above will apply to USOCS: ULSDT and ULSCT** | | | | | | | | | | | | | | | |
| | | **NOTE 2: The Line Sharing monthly recurring rates with USOCs ULSDC and ULSCC applies only to circuits installed and inservice on or before October 1, 2003** | | | | | | | | | | | | | | | |
| | | **LINE SHARING** | | | | | | | | | | | | | | | |
| | | **SPLITTERS-CENTRAL OFFICE BASED** | | | | | | | | | | | | | | | |
| | | Line Sharing Splitter, per System 96 Line Capacity | | | ULS | ULSDA | 186.67 | 189.89 | 0.00 | 178.41 | 0.00 | | | | | | |
| | | Line Sharing Splitter, per System 24 Line Capacity | | | ULS | ULSDB | 46.67 | 189.89 | 0.00 | 178.41 | 0.00 | | | | | | |
| | | Line Sharing Splitter, Per System, 8 Line Capacity | | | ULS | ULSD8 | 15.55 | 189.89 | 0.00 | 178.41 | 0.00 | | | | | | |
| | | Line Sharing-DLEC Owned Splitter in CO-CFA activaton-deactivation (per LSOD) | | | ULS | ULSDG | | 86.98 | 0.00 | 49.96 | 0.00 | | | | | | |
| | | **END USER ORDERING-CENTRAL OFFICE BASED LINE SHARING** | | | | | | | | | | | | | | | |
| | | Line Sharing - per Line Activation (BST Owned splitter) - OBSOLETE see **NOTE 2 | | | ULS | ULSDC | 0.61 | 18.62 | 10.66 | 10.04 | 4.93 | | | | | | |
| | | Line Share Service, TRO per line activation, BST owned splitter - Central Office Located (25% of UCLND) - please see NOTE 1 (E:10/2/2003) | | | ULS | ULSDT | 2.75 | 18.62 | 10.66 | 10.04 | 4.93 | | | | | | |
| | | Line Share Service, TRO per line activation, BST owned splitter - Central Office Located (50% of UCLND) - please see NOTE 1 (E:10/2/2004) | | | ULS | ULSDT | 5.51 | 18.62 | 10.66 | 10.04 | 4.93 | | | | | | |
| | | Line Share Service, TRO per line activation, BST owned splitter - Central Office Located (75% of UCLND) - please see NOTE 1 (E:10/2/2005) | | | ULS | ULSDT | 8.26 | 18.62 | 10.66 | 10.04 | 4.93 | | | | | | |
| | | Line Sharing - per Subsequent Activity per Line Rearrangement(BST Owned Splitter) | | | ULS | ULSDS | | 16.48 | 8.24 | | | | | | | | |
| | | Line Sharing - per Subsequent Activity per Line Rearrangement(DLEC Owned Splitter) | | | ULS | ULSCS | | 16.48 | 8.24 | | | | | | | | |
| | | Line Sharing - per Line Activation (DLEC owned Splitter) - OBSOLETE see **NOTE 2 | | | ULS | ULSCC | 0.61 | 47.44 | 19.31 | 20.67 | 12.74 | | | | | | |
| | | Line Share Service, TRO per line activation, CLEC owned splitter - Central Office Located (25% of UCLND) - please see NOTE 1 (E:10/2/2003) | | | ULS | ULSCT | 2.75 | 47.44 | 19.31 | 20.67 | 12.74 | | | | | | |
| | | Line Share Service, TRO per line activation, CLEC owned splitter - Central Office Located (50% of UCLND) - please see NOTE 1 (E:10/2/2004) | | | ULS | ULSCT | 5.51 | 47.44 | 19.31 | 20.67 | 12.74 | | | | | | |
| | | Line Share Service, TRO per line activation, CLEC owned splitter - Central Office Located (75% of UCLND) - please see NOTE 1 (E:10/2/2005) | | | ULS | ULSCT | 8.26 | 47.44 | 19.31 | 20.67 | 12.74 | | | | | | |
| | | **LINE SPLITTING** | | | | | | | | | | | | | | | |
| | | **END USER ORDERING-CENTRAL OFFICE BASED** | | | | | | | | | | | | | | | |
| | | Line Splitting - per line activation DLEC owned splitter | | | UEPSR UEPSB | UREOS | 0.61 | | | | | | | | | | |
| | | Line Splitting - per line activation BST owned - physical | | | UEPSR UEPSB | UREBP | 0.61 | 18.62 | 10.66 | 10.04 | 4.93 | | | | | | |
| | | Line Splitting - per line activation BST owned - virtual | | | UEPSR UEPSB | UREBV | 0.61 | 18.62 | 10.66 | 10.04 | 4.93 | | | | | | |
| | | **MAINTENANCE** | | | | | | | | | | | | | | | |
| | | No Trouble Found - per 1/2 hour increments - Basic | | | | | | 80.00 | 55.00 | | | | | | | | |
| | | No Trouble Found - per 1/2 hour increments - Overtime | | | | | | 120.00 | 82.50 | | | | | | | | |
| | | No Trouble Found - per 1/2 hour increments - Premium | | | | | | 160.00 | 110.00 | | | | | | | | |

| UNBUNDLED NETWORK ELEMENTS - Mississippi | | | | | | | | | | | | | | Attachment: 2 | | Exhibit: A | |
|---|---|---|---|---|---|---|---|---|---|---|---|---|---|---|---|---|---|
| CATEGORY | RATE ELEMENTS | Interim | Zone | BCS | USOC | RATES ($) | | | | | Svc Order Submitted Elec per LSR | Svc Order Submitted Manually per LSR | Incremental Charge - Manual Svc Order vs. Electronic- 1st | Incremental Charge - Manual Svc Order vs. Electronic- Add'l | Incremental Charge - Manual Svc Order vs. Electronic- Disc 1st | Incremental Charge - Manual Svc Order vs. Electronic- Disc Add'l |
| | | | | | | Rec | Nonrecurring | | Nonrecurring Disconnect | | OSS Rates ($) | | | | | |
| | | | | | | | First | Add'l | First | Add'l | SOMEC | SOMAN | SOMAN | SOMAN | SOMAN | SOMAN |
| UNBUNDLED DEDICATED TRANSPORT | | | | | | | | | | | | | | | | |
| | INTEROFFICE CHANNEL - DEDICATED TRANSPORT | | | | | | | | | | | | | | | |
| | Interoffice Channel - Dedicated Transport - 2-Wire Voice Grade - Per Mile per month | | | U1TVX | 1L5XX | 0.0098 | | | | | | | | | | |
| | Interoffice Channel - Dedicated Transport- 2- Wire Voice Grade - Facility Termination | | | U1TVX | U1TV2 | 22.52 | 40.77 | 27.57 | 17.26 | 7.11 | | | | | | |
| | Interoffice Channel - Dedicated Transpor t- 2-Wire Voice Grade Rev Bat. - Per Mile per month | | | U1TVX | 1L5XX | 0.0098 | | | | | | | | | | |
| | Interoffice Channel - Dedicated Transport- 2- Wire VG Rev Bat. - Facility Termination | | | U1TVX | U1TR2 | 22.52 | 40.77 | 27.57 | 17.26 | 7.11 | | | | | | |
| | Interoffice Channel - Dedicated Transport - 4-Wire Voice Grade - Per Mile per month | | | U1TVX | 1L5XX | 0.0098 | | | | | | | | | | |
| | Interoffice Channel - Dedicated Transport - 4- Wire Voice Grade - Facility Termination | | | U1TVX | U1TV4 | 19.79 | 40.77 | 27.57 | 17.26 | 7.11 | | | | | | |
| | Interoffice Channel - Dedicated Transport - 56 kbps - per mile per month | | | U1TDX | 1L5XX | 0.0098 | | | | | | | | | | |
| | Interoffice Channel - Dedicated Transport - 56 kbps - Facility Termination | | | U1TDX | U1TD5 | 15.68 | 40.78 | 27.57 | 17.26 | 7.11 | | | | | | |
| | Interoffice Channel - Dedicated Transport - 64 kbps - per mile per month | | | U1TDX | 1L5XX | 0.0098 | | | | | | | | | | |
| | Interoffice Channel - Dedicated Transport - 64 kbps - Facility Termination | | | U1TDX | U1TD6 | 15.68 | 40.78 | 27.57 | 17.26 | 7.11 | | | | | | |
| | Interoffice Channel - Dedicated Channel - DS1 - Per Mile per month | | | U1TD1 | 1L5XX | 0.201 | | | | | | | | | | |
| | Interoffice Channel - Dedicated Tranport - DS1 - Facility Termination | | | U1TD1 | U1TF1 | 57.33 | 89.79 | 82.28 | 16.86 | 14.90 | | | | | | |
| | Interoffice Channel - Dedicated Transport - DS3 - Per Mile per month | | | U1TD3 | 1L5XX | 4.76 | | | | | | | | | | |
| | Interoffice Channel - Dedicated Transport - DS3 - Facility Termination per month | | | U1TD3 | U1TF3 | 641.90 | 280.37 | 163.70 | 62.08 | 60.29 | | | | | | |
| | Interoffice Channel - Dedicated Transport - STS-1 - Per Mile per month | | | U1TS1 | 1L5XX | 4.76 | | | | | | | | | | |
| | Interoffice Channel - Dedicated Transport - STS-1 - Facility Termination | | | U1TS1 | U1TFS | 644.21 | 280.37 | 163.70 | 62.08 | 60.29 | | | | | | |
| DARK FIBER | | | | | | | | | | | | | | | | |
| | Dark Fiber, Four Fiber Strands, Per Route Mile or Fraction Thereof per month - Interoffice Channel | | | UDF, UDFCX | 1L5DF | 28.27 | | | | | | | | | | |
| | NRC Dark Fiber - Interoffice Channel | | | UDF, UDFCX | UDF14 | | 642.79 | 138.67 | 326.97 | 203.85 | | | | | | |
| | Dark Fiber, Four Fiber Strands, Per Route Mile or Fraction Thereof per month - Local Loop | | | UDF, UDFCX | 1L5DL | 59.95 | | | | | | | | | | |
| | NRC Dark Fiber - Local Loop | | | UDF, UDFCX | UDFL4 | | 642.79 | 138.67 | 326.97 | 203.85 | | | | | | |
| 8XX ACCESS TEN DIGIT SCREENING | | | | | | | | | | | | | | | | |
| | 8XX Access Ten Digit Screening, Per Call | | | OHD | | 0.0006216 | | | | | | | | | | |
| | 8XX Access Ten Digit Screening, Reservation Charge Per 8XX Number Reserved | | | OHD | N8R1X | | 2.60 | 0.44 | | | | | | | | |
| | 8XX Access Ten Digit Screening, Per 8XX No. Established W/O POTS Translations | | | OHD | | | 5.97 | 0.81 | 4.60 | 0.54 | | | | | | |
| | 8XX Access Ten Digit Screening, Per 8XX No. Established With POTS Translations | | | OHD | N8FTX | | 5.97 | 0.81 | 4.60 | 0.54 | | | | | | |
| | 8XX Access Ten Digit Screening, Customized Area of Service Per 8XX Number | | | OHD | N8FCX | | 2.60 | 1.30 | | | | | | | | |
| | 8XX Access Ten Digit Screening, Multiple InterLATA CXR Routing Per CXR Requested Per 8XX No. | | | OHD | N8FMX | | 3.04 | 1.74 | | | | | | | | |
| | 8XX Access Ten Digit Screening, Change Charge Per Request | | | OHD | N8FAX | | 3.04 | 0.44 | | | | | | | | |
| | 8XX Access Ten Digit Screening, Call Handling and Destination Features | | | OHD | N8FDX | | 2.60 | | | | | | | | | |
| | 8XX Access Ten Digit Screening, w/ 8FL No. Delivery, per query | | | OHD | | 0.0006216 | | | | | | | | | | |

| UNBUNDLED NETWORK ELEMENTS - Mississippi | | | | | | | | | | | | | | Attachment: 2 | | Exhibit: A | |
|---|---|---|---|---|---|---|---|---|---|---|---|---|---|---|---|---|---|
| CATEGORY | RATE ELEMENTS | Interim | Zone | BCS | USOC | RATES ($) | | | | | Svc Order Submitted Elec per LSR | Svc Order Submitted Manually per LSR | Incremental Charge - Manual Svc Order vs. Electronic-1st | Incremental Charge - Manual Svc Order vs. Electronic-Add'l | Incremental Charge - Manual Svc Order vs. Electronic-Disc 1st | Incremental Charge - Manual Svc Order vs. Electronic-Disc Add'l |
| | | | | | | Rec | Nonrecurring | | Nonrecurring Disconnect | | OSS Rates ($) | | | | | |
| | | | | | | | First | Add'l | First | Add'l | SOMEC | SOMAN | SOMAN | SOMAN | SOMAN | SOMAN |
| | 8XX Access Ten Digit Screening, w/ POTS No. Delivery, per query | | | OHD | | 0.0006216 | | | | | | | | | | |
| LINE INFORMATION DATA BASE ACCESS (LIDB) | | | | | | | | | | | | | | | | | |
| | LIDB Common Transport Per Query | | | OQT | | 0.0000197 | | | | | | | | | | |
| | LIDB Validation Per Query | | | OQU | | 0.0137053 | | | | | | | | | | |
| | LIDB Originating Point Code Establishment or Change | | | OQT, OQU | NRBPX | | 34.52 | 34.52 | 42.33 | 42.33 | | | | | | |
| SIGNALING (CCS7) | | | | | | | | | | | | | | | | | |
| | CCS7 Signaling Termination, Per STP Port | | | UDB | PT8SX | 132.21 | | | | | | | | | | |
| | CCS7 Signaling Usage, Per TCAP Message | | | UDB | | 0.0000597 | | | | | | | | | | |
| | CCS7 Signaling Connection, Per link (A link) | | | UDB | TPP++ | 16.55 | 35.74 | 35.74 | 16.53 | 16.53 | | | | | | |
| | CCS7 Signaling Connection, Per link (B link) (also known as D link) | | | UDB | TPP++ | 16.55 | 35.74 | 35.74 | 16.53 | 16.53 | | | | | | |
| | CCS7 Signaling Usage, Per ISUP Message | | | UDB | | 0.0000149 | | | | | | | | | | |
| | CCS7 Signaling Usage Surrogate, per link per LATA | | | UDB | STU56 | 683.55 | | | | | | | | | | |
| | CCS7 Signaling Point Code, per Originating Point Code Establishment or Change, per STP affected | | | UDB | CCAPO | | 29.18 | 29.18 | 35.78 | 35.78 | | | | | | |
| E911 SERVICE | | | | | | | | | | | | | | | | | |
| | Local Channel - Dedicated - 2-wr Voice Grade | | | | | 14.91 | 194.22 | 33.36 | 37.79 | 3.30 | | | | | | |
| | Interoffice Transport - Dedicated - 2-wr Voice Grade Per Mile | | | | | 0.0098 | | | | | | | | | | |
| | Interoffice Transport - Dedicated - 2-wr Voice Grade Per Facility Termination | | | | | 22.52 | 40.77 | 27.57 | 17.26 | 7.11 | | | | | | |
| | Local Channel - Dedicated - DS1 - Zone 1 | | | | | 36.83 | 178.50 | 154.61 | 22.89 | 15.74 | | | | | | |
| | Local Channel - Dedicated - DS1 - Zone 2 | | | | | 35.99 | 178.50 | 154.61 | 22.89 | 15.74 | | | | | | |
| | Local Channel - Dedicated - DS1 - Zone 3 | | | | | 221.63 | 178.50 | 154.61 | 22.89 | 15.74 | | | | | | |
| | Local Channel - Dedicated - DS1 - Zone 4 | | | | | 221.63 | 178.50 | 154.61 | 22.89 | 15.74 | | | | | | |
| | Interoffice Transport - Dedicated - DS1 Per Mile | | | | | 0.2010 | | | | | | | | | | |
| | Interoffice Transport - Dedicated - DS1 Per Facility Termination | | | | | 57.33 | 89.79 | 82.28 | 16.86 | 14.90 | | | | | | |
| CALLING NAME (CNAM) SERVICE | | | | | | | | | | | | | | | | | |
| | CNAM For DB Owners - Service Establishment | | | OQV | | | 23.09 | 23.09 | 21.23 | 21.23 | | | | | | |
| | CNAM For Non DB Owners - Service Establishment | | | OQV | | | 23.09 | 23.09 | 21.23 | 21.23 | | | | | | |
| | CNAM For DB Owners - Service Provisioning With Point Code Establishment | | | OQV | | | 996.62 | 737.08 | 270.49 | 198.89 | | | | | | |
| | CNAM For Non DB Owners - Service Provisioning With Point Code Establishment | | | OQV | | | 344.32 | 246.56 | 276.85 | 198.89 | | | | | | |
| | CNAM for DB Owners, Per Query | | | OQV | | 0.0010231 | | | | | | | | | | |
| | CNAM for Non DB Owners, Per Query | | | OQV | | 0.0010231 | | | | | | | | | | |
| SELECTIVE ROUTING | | | | | | | | | | | | | | | | | |
| | Selective Routing Per Unique Line Class Code Per Request Per Switch | | | | | | 85.19 | 85.19 | 14.19 | 14.19 | | | | | | |
| VIRTUAL COLLOCATION | | | | | | | | | | | | | | | | | |
| | Virtual Collocation-2 Wire Cross Connects (Loop) for Line Splitting | | | UEPSR UEPSB | VE1LS | 0.0268 | 12.37 | 11.87 | 6.04 | 5.45 | | | | | | |
| PHYSICAL COLLOCATION | | | | | | | | | | | | | | | | | |
| | Physical Collocation-2 Wire Cross Connects (Loop) for Line Splitting | | | UEPSR UEPSB | PE1LS | 0.0288 | 12.37 | 11.87 | 6.04 | 5.45 | | | | | | |
| AIN SELECTIVE CARRIER ROUTING | | | | | | | | | | | | | | | | | |
| | Regional Service Establishment | | | SRC | SRCEC | | 101,685.12 | | 8,640.51 | | | | | | | |
| | End Office Establishment | | | SRC | SRCEO | | 167.49 | 167.49 | 1.71 | 1.71 | | | | | | |
| | Query NRC, per query | | | SRC | | 0.0030502 | | | | | | | | | | |
| AIN - BELLSOUTH AIN SMS ACCESS SERVICE | | | | | | | | | | | | | | | | | |
| | AIN SMS Access Service - Service Establishment, Per State, Initial Setup | | | A1N | CAMSE | | 39.67 | 39.67 | 40.92 | 40.92 | | | | | | |
| | AIN SMS Access Service - Port Connection - Dial/Shared Access | | | A1N | CAMDP | | 7.87 | 7.87 | 9.14 | 9.14 | | | | | | |
| | AIN SMS Access Service - Port Connection - ISDN Access | | | A1N | CAM1P | | 7.87 | 7.87 | 9.14 | 9.14 | | | | | | |
| | AIN SMS Access Service - User Identification Codes - Per User ID Code | | | A1N | CAMAU | | 35.21 | 35.21 | 27.21 | 27.21 | | | | | | |

| UNBUNDLED NETWORK ELEMENTS - Mississippi | | | | | | | | | | | | | | Attachment: 2 | | Exhibit: A | |
|---|---|---|---|---|---|---|---|---|---|---|---|---|---|---|---|---|---|
| CATEGORY | | RATE ELEMENTS | Interim | Zone | BCS | USOC | RATES ($) | | | | | Svc Order Submitted Elec per LSR | Svc Order Submitted Manually per LSR | Incremental Charge - Manual Svc Order vs. Electronic-1st | Incremental Charge - Manual Svc Order vs. Electronic-Add'l | Incremental Charge - Manual Svc Order vs. Electronic-Disc 1st | Incremental Charge - Manual Svc Order vs. Electronic-Disc Add'l |
| | | | | | | | Rec | Nonrecurring | | Nonrecurring Disconnect | | OSS Rates ($) | | | | | |
| | | | | | | | | First | Add'l | First | Add'l | SOMEC | SOMAN | SOMAN | SOMAN | SOMAN | SOMAN |
| | | AIN SMS Access Service - Security Card, Per User ID Code, Initial or Replacement | | | A1N | CAMRC | | 42.13 | 42.13 | 11.78 | 11.78 | | | | | | |
| | | AIN SMS Access Service - Storage, Per Unit (100 Kilobytes) | | | | | 0.0021 | | | | | | | | | | |
| | | AIN SMS Access Service - Session, Per Minute | | | | | 0.5649 | | | | | | | | | | |
| | | AIN SMS Access Service - Company Performed Session, Per Minute | | | | | 0.8393 | | | | | | | | | | |
| AIN - BELLSOUTH AIN TOOLKIT SERVICE | | | | | | | | | | | | | | | | | |
| | | AIN Toolkit Service - Service Establishment Charge, Per State, Initial Setup | | | CAM | BAPSC | | 39.67 | 39.67 | 40.92 | 40.92 | | | | | | |
| | | AIN Toolkit Service - Training Session, Per Customer | | | | BAPVX | | 4,226.54 | 4,226.54 | | | | | | | | |
| | | AIN Toolkit Service - Trigger Access Charge, Per Trigger, Per DN, Term. Attempt | | | | BAPTT | | 7.87 | 7.87 | 9.14 | 9.14 | | | | | | |
| | | AIN Toolkit Service - Trigger Access Charge, Per Trigger, Per DN, Off-Hook Delay | | | | BAPTD | | 7.87 | 7.87 | 9.14 | 9.14 | | | | | | |
| | | AIN Toolkit Service - Trigger Access Charge, Per Trigger, Per DN, Off-Hook Immediate | | | | BAPTM | | 7.87 | 7.87 | 9.14 | 9.14 | | | | | | |
| | | AIN Toolkit Service - Trigger Access Charge, Per Trigger, Per DN, 10-Digit PODP | | | | BAPTO | | 34.67 | 34.67 | 14.44 | 14.44 | | | | | | |
| | | AIN Toolkit Service - Trigger Access Charge, Per Trigger, Per DN, CDP | | | | BAPTC | | 34.67 | 34.67 | 14.44 | 14.44 | | | | | | |
| | | AIN Toolkit Service - Trigger Access Charge, Per Trigger, Per DN, Feature Code | | | | BAPTF | | 34.67 | 34.67 | 14.44 | 14.44 | | | | | | |
| | | AIN Toolkit Service - Query Charge, Per Query | | | | | 0.0535577 | | | | | | | | | | |
| | | AIN Toolkit Service - Type 1 Node Charge, Per AIN Toolkit Subscription, Per Node, Per Query | | | | | 0.0063509 | | | | | | | | | | |
| | | AIN Toolkit Service - SCP Storage Charge, Per SMS Access Account, Per 100 Kilobytes | | | | | 0.06 | | | | | | | | | | |
| | | AIN Toolkit Service - Monthly report - Per AIN Toolkit Service Subscription | | | CAM | BAPMS | 11.11 | 7.87 | 7.87 | 5.54 | 5.54 | | | | | | |
| | | AIN Toolkit Service - Special Study - Per AIN Toolkit Service Subscription | | | CAM | BAPLS | 2.71 | 8.71 | 8.71 | | | | | | | | |
| | | AIN Toolkit Service - Call Event Report - Per AIN Toolkit Service Subscription | | | CAM | BAPDS | 8.48 | 7.87 | 7.87 | 5.54 | 5.54 | | | | | | |
| | | AIN Toolkit Service - Call Event Special Study - Per AIN Toolkit Service Subscription | | | CAM | BAPES | 0.09 | 8.71 | 8.71 | | | | | | | | |
| ENHANCED EXTENDED LINK (EELs) | | | | | | | | | | | | | | | | | |
| | | **NOTE: The monthly recurring and non-recurring charges below will apply and the Switch-As-Is Charge will not apply for UNE combinations provisioned as ' Ordinarily Combined' Network Elements.** | | | | | | | | | | | | | | | |
| | | **NOTE: The monthly recurring and the Switch-As-Is Charge and not the non-recurring charges below will apply for UNE combinations provisioned as ' Currently Combined' Network Elements.** | | | | | | | | | | | | | | | |
| | | **EXTENTED 2-WIRE VOICE GRADE EXTENDED LOOP WITH DEDICATED DS1 INTEROFFICE TRANSPORT** | | | | | | | | | | | | | | | |
| | | First 2-Wire VG Loop (SL2) in Combination - Zone 1 | | 1 | UNCVX | UEAL2 | 13.89 | 105.96 | 68.28 | 52.82 | 10.37 | | | | | | |
| | | First 2-Wire VG Loop (SL2) in Combination - Zone 2 | | 2 | UNCVX | UEAL2 | 18.75 | 105.96 | 68.28 | 52.82 | 10.37 | | | | | | |
| | | First 2-Wire VG Loop (SL2) in Combination - Zone 3 | | 3 | UNCVX | UEAL2 | 27.55 | 105.96 | 68.28 | 52.82 | 10.37 | | | | | | |
| | | First 2-Wire VG Loop (SL2) in Combination - Zone 4 | | 4 | UNCVX | UEAL2 | 45.72 | 105.96 | 68.28 | 52.82 | 10.37 | | | | | | |
| | | Interoffice Transport - Dedicated - DS1 combination - Per Mile per month | | | UNC1X | 1L5XX | 0.1813 | | | | | | | | | | |
| | | Interoffice Transport - Dedicated - DS1 combination - Facility Termination per month | | | UNC1X | U1TF1 | 51.72 | 89.79 | 82.28 | 16.86 | 14.90 | | | | | | |
| | | 1/0 Channelization System in combination Per Month | | | UNC1X | MQ1 | 102.85 | 91.57 | 62.94 | 10.87 | 10.10 | | | | | | |
| | | Voice Grade COCI - Per Month | | | UNCVX | 1D1VG | 0.5737 | 6.62 | 4.74 | | | | | | | | |
| | | Each Additional 2-Wire VG Loop (SL 2) in Combination - Zone 1 | | 1 | UNCVX | UEAL2 | 13.89 | 105.96 | 68.28 | 52.82 | 10.37 | | | | | | |
| | | Each Additional 2-Wire VG Loop (SL 2) in Combination - Zone 2 | | 2 | UNCVX | UEAL2 | 18.75 | 105.96 | 68.28 | 52.82 | 10.37 | | | | | | |
| | | Each Additional 2-Wire VG Loop (SL 2) in Combination - Zone 3 | | 3 | UNCVX | UEAL2 | 27.55 | 105.96 | 68.28 | 52.82 | 10.37 | | | | | | |
| | | Each Additional 2-Wire VG Loop (SL 2) in Combination - Zone 4 | | 4 | UNCVX | UEAL2 | 45.72 | 105.96 | 68.28 | 52.82 | 10.37 | | | | | | |
| | | Voice Grade COCI - Per Month | | | UNCVX | 1D1VG | 0.5737 | 6.62 | 4.74 | | | | | | | | |

| UNBUNDLED NETWORK ELEMENTS - Mississippi | | | | | | | | | | | | | | Attachment: 2 | | Exhibit: A | |
|---|---|---|---|---|---|---|---|---|---|---|---|---|---|---|---|---|---|
| CATEGORY | | RATE ELEMENTS | Interim | Zone | BCS | USOC | RATES ($) | | | | | Svc Order Submitted Elec per LSR | Svc Order Submitted Manually per LSR | Incremental Charge - Manual Svc Order vs. Electronic-1st | Incremental Charge - Manual Svc Order vs. Electronic-Add'l | Incremental Charge - Manual Svc Order vs. Electronic-Disc 1st | Incremental Charge - Manual Svc Order vs. Electronic-Disc Add'l |
| | | | | | | | Rec | Nonrecurring | | Nonrecurring Disconnect | | OSS Rates ($) | | | | | |
| | | | | | | | | First | Add'l | First | Add'l | SOMEC | SOMAN | SOMAN | SOMAN | SOMAN | SOMAN |
| | | Nonrecurring Currently Combined Network Elements Switch -As-Is Charge | | | UNC1X | UNCCC | | 5.63 | 5.63 | 7.20 | 7.20 | | | | | | |
| | | **EXTENDED 4-WIRE VOICE GRADE EXTENDED LOOP WITH DEDICATED DS1 INTEROFFICE TRANSPORT** | | | | | | | | | | | | | | | |
| | | First 4-Wire Analog Voice Grade Loop in Combination - Zone 1 | | 1 | UNCVX | UEAL4 | 27.47 | 132.27 | 94.59 | 60.68 | 14.64 | | | | | | |
| | | First 4-Wire Analog Voice Grade Loop in Combination - Zone 2 | | 2 | UNCVX | UEAL4 | 38.26 | 132.27 | 94.59 | 60.68 | 14.64 | | | | | | |
| | | First 4-Wire Analog Voice Grade Loop in Combination - Zone 3 | | 3 | UNCVX | UEAL4 | 50.03 | 132.27 | 94.59 | 60.68 | 14.64 | | | | | | |
| | | First 4-Wire Analog Voice Grade Loop in Combination - Zone 4 | | 4 | UNCVX | UEAL4 | 50.03 | 132.27 | 94.59 | 60.68 | 14.64 | | | | | | |
| | | Interoffice Transport - Dedicated - DS1 combination - Per Mile Per Month | | | UNC1X | 1L5XX | 0.1813 | | | | | | | | | | |
| | | Interoffice Transport - Dedicated - DS1 - Facility Termination Per Month | | | UNC1X | U1TF1 | 51.72 | 89.79 | 82.28 | 16.86 | 14.90 | | | | | | |
| | | 1/0 Channel System in combination Per Month | | | UNC1X | MQ1 | 102.85 | 91.57 | 62.94 | 10.87 | 10.10 | | | | | | |
| | | Voice Grade COCI in combination - per month | | | UNCVX | 1D1VG | 0.5737 | 6.62 | 4.74 | | | | | | | | |
| | | Additional 4-Wire Analog Voice Grade Loop in same DS1 Interoffice Transport Combination - Zone 1 | | 1 | UNCVX | UEAL4 | 27.47 | 132.27 | 94.59 | 60.68 | 14.64 | | | | | | |
| | | Additional 4-Wire Analog Voice Grade Loop in same DS1 Interoffice Transport Combination - Zone 2 | | 2 | UNCVX | UEAL4 | 38.26 | 132.27 | 94.59 | 60.68 | 14.64 | | | | | | |
| | | Additional 4-Wire Analog Voice Grade Loop in same DS1 Interoffice Transport Combination - Zone 3 | | 3 | UNCVX | UEAL4 | 50.03 | 132.27 | 94.59 | 60.68 | 14.64 | | | | | | |
| | | Additional 4-Wire Analog Voice Grade Loop in same DS1 Interoffice Transport Combination - Zone 4 | | 4 | UNCVX | UEAL4 | 50.03 | 132.27 | 94.59 | 60.68 | 14.64 | | | | | | |
| | | Additional Voice Grade COCI in combination - per month | | | UNCVX | 1D1VG | 0.5737 | 6.62 | 4.74 | | | | | | | | |
| | | Nonrecurring Currently Combined Network Elements Switch -As-Is Charge | | | UNC1X | UNCCC | | 5.63 | 5.63 | 7.20 | 7.20 | | | | | | |
| | | **EXTENDED 4-WIRE 56 KBPS EXTENDED DIGITAL LOOP WITH DEDICATED DS1 INTEROFFICE TRANSPORT** | | | | | | | | | | | | | | | |
| | | First 4-Wire 56Kbps Digital Grade Loop in Combination - Zone 1 | | 1 | UNCDX | UDL56 | 27.44 | 126.53 | 88.85 | 60.68 | 14.64 | | | | | | |
| | | First 4-Wire 56Kbps Digital Grade Loop in Combination - Zone 2 | | 2 | UNCDX | UDL56 | 34.55 | 126.53 | 88.85 | 60.68 | 14.64 | | | | | | |
| | | First 4-Wire 56Kbps Digital Grade Loop in Combination - Zone 3 | | 3 | UNCDX | UDL56 | 40.76 | 126.53 | 88.85 | 60.68 | 14.64 | | | | | | |
| | | First 4-Wire 56Kbps Digital Grade Loop in Combination - Zone 4 | | 4 | UNCDX | UDL56 | 32.25 | 126.53 | 88.85 | 60.68 | 14.64 | | | | | | |
| | | Interoffice Transport - Dedicated - DS1 combination - Per Mile Per Month | | | UNC1X | 1L5XX | 0.1813 | | | | | | | | | | |
| | | Interoffice Transport - Dedicated - DS1 - combination Facility Termination Per Month | | | UNC1X | U1TF1 | 51.72 | 89.79 | 82.28 | 16.86 | 14.90 | | | | | | |
| | | 1/0 Channel System in combination Per Month | | | UNC1X | MQ1 | 102.85 | 91.57 | 62.94 | 10.87 | 10.10 | | | | | | |
| | | OCU-DP COCI (data) per month (2.4-64kbs) | | | UNCDX | 1D1DD | 1.22 | 6.62 | 4.74 | 0.00 | 0.00 | | | | | | |
| | | Additional 4-Wire 56Kbps Digital Grade Loop in same DS1 Interoffice Transport Combination - Zone 1 | | 1 | UNCDX | UDL56 | 27.44 | 126.53 | 88.85 | 60.68 | 14.64 | | | | | | |
| | | Additional 4-Wire 56Kbps Digital Grade Loop in same DS1 Interoffice Transport Combination - Zone 2 | | 2 | UNCDX | UDL56 | 34.55 | 126.53 | 88.85 | 60.68 | 14.64 | | | | | | |
| | | Additional 4-Wire 56Kbps Digital Grade Loop in same DS1 Interoffice Transport Combination - Zone 3 | | 3 | UNCDX | UDL56 | 40.76 | 126.53 | 88.85 | 60.68 | 14.64 | | | | | | |
| | | Additional 4-Wire 56Kbps Digital Grade Loop in same DS1 Interoffice Transport Combination - Zone 4 | | 4 | UNCDX | UDL56 | 32.25 | 126.53 | 88.85 | 60.68 | 14.64 | | | | | | |
| | | Additional OCU-DP COCI (data) - in combination per month (2.4-64kbs) | | | UNCDX | 1D1DD | 1.22 | 6.62 | 4.74 | 0.00 | 0.00 | | | | | | |
| | | Nonrecurring Currently Combined Network Elements Switch -As-Is Charge | | | UNC1X | UNCCC | | 5.63 | 5.63 | 7.20 | 7.20 | | | | | | |
| | | **EXTENDED 4-WIRE 64 KBPS EXTENDED DIGITAL LOOP WITH DEDICATED DS1 INTEROFFICE TRANSPORT** | | | | | | | | | | | | | | | |
| | | First 4-Wire 64Kbps Digital Grade Loop in Combination - Zone 1 | | 1 | UNCDX | UDL64 | 27.44 | 126.53 | 88.85 | 60.68 | 14.64 | | | | | | |

## UNBUNDLED NETWORK ELEMENTS - Mississippi

| CATEGORY | RATE ELEMENTS | Interim | Zone | BCS | USOC | RATES ($) | | | | | Svc Order Submitted Elec per LSR | Svc Order Submitted Manually per LSR | Attachment: 2 Incremental Charge - Manual Svc Order vs. Electronic-1st | Attachment: 2 Incremental Charge - Manual Svc Order vs. Electronic-Add'l | Exhibit: A Incremental Charge - Manual Svc Order vs. Electronic-Disc 1st | Exhibit: A Incremental Charge - Manual Svc Order vs. Electronic-Disc Add'l |
|---|---|---|---|---|---|---|---|---|---|---|---|---|---|---|---|---|
| | | | | | | Rec | Nonrecurring | | Nonrecurring Disconnect | | OSS Rates ($) | | | | | |
| | | | | | | | First | Add'l | First | Add'l | SOMEC | SOMAN | SOMAN | SOMAN | SOMAN | SOMAN |
| | First 4-Wire 64Kbps Digital Grade Loop in Combination - Zone 2 | | 2 | UNCDX | UDL64 | 34.55 | 126.53 | 88.85 | 60.68 | 14.64 | | | | | | |
| | First 4-Wire 64Kbps Digital Grade Loop in Combination - Zone 3 | | 3 | UNCDX | UDL64 | 40.76 | 126.53 | 88.85 | 60.68 | 14.64 | | | | | | |
| | First 4-Wire 64Kbps Digital Grade Loop in Combination - Zone 4 | | 4 | UNCDX | UDL64 | 32.25 | 126.53 | 88.85 | 60.68 | 14.64 | | | | | | |
| | Interoffice Transport - Dedicated - DS1 combination - Per Mile Per Month | | | UNC1X | 1L5XX | 0.1813 | | | | | | | | | | |
| | interoffice Transport - Dedicated - DS1 combination - Facility Termination Per Month | | | UNC1X | U1TF1 | 51.72 | 89.79 | 82.28 | 16.86 | 14.90 | | | | | | |
| | 1/0 Channel System in combination Per Month | | | UNC1X | MQ1 | 102.85 | 91.57 | 62.94 | 10.87 | 10.10 | | | | | | |
| | OCU-DP COCI (data) - in combination - per month (2.4-64kbs) | | | UNCDX | 1D1DD | 1.22 | 6.62 | 4.74 | 0.00 | 0.00 | | | | | | |
| | Additional 4-Wire 64Kbps Digital Grade Loop in same DS1 Interoffice Transport Combination - Zone 1 | | 1 | UNCDX | UDL64 | 27.44 | 126.53 | 88.85 | 60.68 | 14.64 | | | | | | |
| | Additional 4-Wire 64Kbps Digital Grade Loop in same DS1 Interoffice Transport Combination - Zone 2 | | 2 | UNCDX | UDL64 | 34.55 | 126.53 | 88.85 | 60.68 | 14.64 | | | | | | |
| | Additional 4-Wire 64Kbps Digital Grade Loop in same DS1 Interoffice Transport Combination - Zone 3 | | 3 | UNCDX | UDL64 | 40.76 | 126.53 | 88.85 | 60.68 | 14.64 | | | | | | |
| | Additional 4-Wire 64Kbps Digital Grade Loop in same DS1 Interoffice Transport Combination - Zone 4 | | 4 | UNCDX | UDL64 | 32.25 | 126.53 | 88.85 | 60.68 | 14.64 | | | | | | |
| | Additional OCU-DP COCI (data) - in combination - per month (2.4-64kbs) | | | UNCDX | 1D1DD | 1.22 | 6.62 | 4.74 | 0.00 | 0.00 | | | | | | |
| | Nonrecurring Currently Combined Network Elements Switch -As-Is Charge | | | UNC1X | UNCCC | | 5.63 | 5.63 | 7.20 | 7.20 | | | | | | |
| | **EXTENDED 4-WIRE DS1 DIGITAL EXTENDED LOOP WITH DEDICATED DS1 INTEROFFICE TRANSPORT** | | | | | | | | | | | | | | | |
| | 4-Wire DS1 Digital Loop in Combination - Zone 1 | | 1 | UNC1X | USLXX | 79.08 | 253.93 | 158.45 | 46.10 | 12.07 | | | | | | |
| | 4-Wire DS1 Digital Loop in Combination - Zone 2 | | 2 | UNC1X | USLXX | 129.38 | 253.93 | 158.45 | 46.10 | 12.07 | | | | | | |
| | 4-Wire DS1 Digital Loop in Combination - Zone 3 | | 3 | UNC1X | USLXX | 206.74 | 253.93 | 158.45 | 46.10 | 12.07 | | | | | | |
| | 4-Wire DS1 Digital Loop in Combination - Zone 4 | | 4 | UNC1X | USLXX | 458.46 | 253.93 | 158.45 | 46.10 | 12.07 | | | | | | |
| | Interoffice Transport - Dedicated - DS1 combination - Per Mile Per Month | | | UNC1X | 1L5XX | 0.1813 | | | | | | | | | | |
| | Interoffice Transport - Dedicated - DS1 combination - Facility Termination Per Month | | | UNC1X | U1TF1 | 51.72 | 89.79 | 82.28 | 16.86 | 14.90 | | | | | | |
| | Nonrecurring Currently Combined Network Elements Switch -As-Is Charge | | | UNC1X | UNCCC | | 5.63 | 5.63 | 7.20 | 7.20 | | | | | | |
| | **EXTENDED 4-WIRE DS1 DIGITAL EXTENDED LOOP WITH DEDICATED DS3 INTEROFFICE TRANSPORT** | | | | | | | | | | | | | | | |
| | First DS1Loop in Combination - Zone 1 | | 1 | UNC1X | USLXX | 79.08 | 253.93 | 158.45 | 46.10 | 12.07 | | | | | | |
| | First DS1Loop in Combination - Zone 2 | | 2 | UNC1X | USLXX | 129.38 | 253.93 | 158.45 | 46.10 | 12.07 | | | | | | |
| | First DS1Loop in Combination - Zone 3 | | 3 | UNC1X | USLXX | 206.74 | 253.93 | 158.45 | 46.10 | 12.07 | | | | | | |
| | First DS1Loop in Combination - Zone 4 | | 4 | UNC1X | USLXX | 458.46 | 253.93 | 158.45 | 46.10 | 12.07 | | | | | | |
| | Interoffice Transport - Dedicated - DS3 combination - Per Mile Per Month | | | UNC3X | 1L5XX | 4.29 | | | | | | | | | | |
| | Interoffice Transport - Dedicated - DS3 - Facility Termination per month | | | UNC3X | U1TF3 | 641.90 | 280.37 | 163.70 | 62.08 | 60.29 | | | | | | |
| | 3/1Channel System in combination per month | | | UNC3X | MQ3 | 170.63 | 179.17 | 94.52 | 34.30 | 32.82 | | | | | | |
| | DS1 COCI in combination per month | | | UNC1X | UC1D1 | 2.62 | 6.62 | 4.74 | 0.00 | 0.00 | | | | | | |
| | Additional DS1Loop in DS3 Interoffice Transport Combination - Zone 1 | | 1 | UNC1X | USLXX | 79.08 | 253.93 | 158.45 | 46.10 | 12.07 | | | | | | |
| | Additional DS1Loop in DS3 Interoffice Transport Combination - Zone 2 | | 2 | UNC1X | USLXX | 129.38 | 253.93 | 158.45 | 46.10 | 12.07 | | | | | | |
| | Additional DS1Loop in DS3 Interoffice Transport Combination - Zone 3 | | 3 | UNC1X | USLXX | 206.74 | 253.93 | 158.45 | 46.10 | 12.07 | | | | | | |
| | Additional DS1Loop in DS3 Interoffice Transport Combination - Zone 4 | | 4 | UNC1X | USLXX | 458.46 | 253.93 | 158.45 | 46.10 | 12.07 | | | | | | |
| | Additoinal DS1 COCI in combination per month | | | UNC1X | UC1D1 | 2.62 | 6.62 | 4.74 | 0.00 | 0.00 | | | | | | |
| | Nonrecurring Currently Combined Network Elements Switch -As-Is Charge | | | UNC3X | UNCCC | | 5.63 | 5.63 | 7.20 | 7.20 | | | | | | |
| | **EXTENDED 2-WIRE VOICE GRADE EXTENDED LOOP/ 2 WIRE VOICE GRADE INTEROFFICE TRANSPORT** | | | | | | | | | | | | | | | |
| | 2-WireVG Loop in combination - Zone 1 | | 1 | UNCVX | UEAL2 | 13.89 | 105.96 | 68.28 | 52.82 | 10.37 | | | | | | |

| UNBUNDLED NETWORK ELEMENTS - Mississippi | | | | | | | | | | | | | | Attachment: 2 | | Exhibit: A | |
|---|---|---|---|---|---|---|---|---|---|---|---|---|---|---|---|---|---|
| CATEGORY | | RATE ELEMENTS | Interim | Zone | BCS | USOC | RATES ($) | | | | | Svc Order Submitted Elec per LSR | Svc Order Submitted Manually per LSR | Incremental Charge - Manual Svc Order vs. Electronic-1st | Incremental Charge - Manual Svc Order vs. Electronic-Add'l | Incremental Charge - Manual Svc Order vs. Electronic-Disc 1st | Incremental Charge - Manual Svc Order vs. Electronic-Disc Add'l |
| | | | | | | | Rec | Nonrecurring | | Nonrecurring Disconnect | | OSS Rates ($) | | | | | |
| | | | | | | | | First | Add'l | First | Add'l | SOMEC | SOMAN | SOMAN | SOMAN | SOMAN | SOMAN |
| | | 2-WireVG Loop in combination - Zone 2 | | 2 | UNCVX | UEAL2 | 18.75 | 105.96 | 68.28 | 52.82 | 10.37 | | | | | | |
| | | 2-WireVG Loop in combination - Zone 3 | | 3 | UNCVX | UEAL2 | 27.55 | 105.96 | 68.28 | 52.82 | 10.37 | | | | | | |
| | | 2-WireVG Loop in combination - Zone 4 | | 4 | UNCVX | UEAL2 | 45.72 | 105.96 | 68.28 | 52.82 | 10.37 | | | | | | |
| | | Interoffice Transport - 2-wire VG - Dedicated- Per Mile Per Month | | | UNCVX | 1L5XX | 0.00088 | | | | | | | | | | |
| | | Interoffice Transport - 2-wire VG - Dedicated - Facility Termination per month | | | UNCVX | U1TV2 | 20.32 | 40.77 | 27.57 | 17.26 | 7.11 | | | | | | |
| | | Nonrecurring Currently Combined Network Elements Switch -As-Is Charge | | | UNCVX | UNCCC | | 5.63 | 5.63 | 7.20 | 7.20 | | | | | | |
| | | **EXTENDED 4-WIRE VOICE GRADE EXTENDED LOOP/ 4 WIRE VOICE GRADE INTEROFFICE TRANSPORT** | | | | | | | | | | | | | | | |
| | | 4-WireVG Loop in combination - Zone 1 | | 1 | UNCVX | UEAL4 | 27.47 | 132.27 | 94.59 | 60.68 | 14.64 | | | | | | |
| | | 4-WireVG Loop in combination - Zone 2 | | 2 | UNCVX | UEAL4 | 38.26 | 132.27 | 94.59 | 60.68 | 14.64 | | | | | | |
| | | 4-WireVG Loop in combination - Zone 3 | | 3 | UNCVX | UEAL4 | 50.03 | 132.27 | 94.59 | 60.68 | 14.64 | | | | | | |
| | | 4-WireVG Loop in combination - Zone 4 | | 4 | UNCVX | UEAL4 | 50.03 | 132.27 | 94.59 | 60.68 | 14.64 | | | | | | |
| | | Interoffice Transport - 4-wire VG - Dedicated - Per Mile Per Month | | | UNCVX | 1L5XX | 0.00088 | | | | | | | | | | |
| | | Interoffice Transport - 4-wire VG - Dedicated - Facility Termination per month | | | UNCVX | U1TV4 | 17.86 | 40.77 | 27.57 | 17.26 | 7.11 | | | | | | |
| | | Nonrecurring Currently Combined Network Elements Switch -As-Is Charge | | | UNCVX | UNCCC | | 5.63 | 5.63 | 7.20 | 7.20 | | | | | | |
| | | **EXTENDED DS3 DIGITAL EXTENDED LOOP WITH DEDICATED DS3 INTEROFFICE TRANSPORT** | | | | | | | | | | | | | | | |
| | | DS3 Local Loop in combination - per mile per month | | | UNC3X | 1L5ND | 11.20 | | | | | | | | | | |
| | | DS3 Local Loop in combination - Facility Termination per month | | | UNC3X | UE3PX | 252.17 | 454.13 | 265.47 | 123.23 | 86.19 | | | | | | |
| | | Interoffice Transport - Dedicated - DS3 - Per Mile per month | | | UNC3X | 1L5XX | 4.29 | | | | | | | | | | |
| | | Interoffice Transport - Dedicated - DS3 combination - Facility Termination per month | | | UNC3X | U1TF3 | 641.90 | 280.37 | 163.70 | 62.08 | 60.29 | | | | | | |
| | | Nonrecurring Currently Combined Network Elements Switch -As-Is Charge | | | UNC3X | UNCCC | | 5.63 | 5.63 | 7.20 | 7.20 | | | | | | |
| | | **EXTENDED STS-1 DIGITAL EXTENDED LOOP WITH DEDICATED STS-1 INTEROFFICE TRANSPORT** | | | | | | | | | | | | | | | |
| | | STS-1 Local Loip in combination - per mile per month | | | UNCSX | 1L5ND | 11.20 | | | | | | | | | | |
| | | STS-1 Local Loop in combination - Facility Termination per month | | | UNCSX | UDLS1 | 264.35 | 454.13 | 265.47 | 123.23 | 86.19 | | | | | | |
| | | Interoffice Transport - Dedicated - STS-1 combination - per mile per month | | | UNCSX | 1L5XX | 4.29 | | | | | | | | | | |
| | | Interoffice Transport - Dedicated - STS-1 combination - Facility Termination per month | | | UNCSX | U1TFS | 644.21 | 280.37 | 163.70 | 62.08 | 60.29 | | | | | | |
| | | Nonrecurring Currently Combined Network Elements Switch -As-Is Charge | | | UNCSX | UNCCC | | 5.63 | 5.63 | 7.20 | 7.20 | | | | | | |
| | | **EXTENDED 2-WIRE ISDN EXTENDED LOOP WITH DS1 INTEROFFICE TRANSPORT** | | | | | | | | | | | | | | | |
| | | First 2-Wire ISDN Loop in Combination - Zone 1 | | 1 | UNCNX | U1L2X | 21.01 | 117.61 | 79.92 | 52.82 | 10.37 | | | | | | |
| | | First 2-Wire ISDN Loop in Combination - Zone 2 | | 2 | UNCNX | U1L2X | 27.59 | 117.61 | 79.92 | 52.82 | 10.37 | | | | | | |
| | | First 2-Wire ISDN Loop in Combination - Zone 3 | | 3 | UNCNX | U1L2X | 37.34 | 117.61 | 79.92 | 52.82 | 10.37 | | | | | | |
| | | First 2-Wire ISDN Loop in Combination - Zone 4 | | 4 | UNCNX | U1L2X | 59.18 | 117.61 | 79.92 | 52.82 | 10.37 | | | | | | |
| | | Interoffice Transport - Dedicated - DS1 combination - per mile per month | | | UNC1X | 1L5XX | 0.1813 | | | | | | | | | | |
| | | Interoffice Transport - Dedicated - DS1 combination - Facility Termination per month | | | UNC1X | U1TF1 | 51.72 | 89.79 | 82.28 | 16.86 | 14.90 | | | | | | |
| | | 1/0 Channel System in combination - per month | | | UNC1X | MQ1 | 102.85 | 91.57 | 62.94 | 10.87 | 10.10 | | | | | | |
| | | 2-wire ISDN COCI (BRITE) - in combination - per month | | | UNCNX | UC1CA | 2.62 | 6.62 | 4.74 | 0.00 | 0.00 | | | | | | |
| | | Additional 2-wire ISDN Loop in same DS1Interoffice Transport Combination - Zone 1 | | 1 | UNCNX | U1L2X | 21.01 | 117.61 | 79.92 | 52.82 | 10.37 | | | | | | |
| | | Additional 2-wire ISDN Loop in same DS1Interoffice Transport Combination - Zone 2 | | 2 | UNCNX | U1L2X | 27.59 | 117.61 | 79.92 | 52.82 | 10.37 | | | | | | |
| | | Additional 2-wire ISDN Loop in same DS1Interoffice Transport Combination - Zone 3 | | 3 | UNCNX | U1L2X | 37.34 | 117.61 | 79.92 | 52.82 | 10.37 | | | | | | |
| | | Additional 2-wire ISDN Loop in same DS1Interoffice Transport Combination - Zone 4 | | 4 | UNCNX | U1L2X | 59.18 | 117.61 | 79.92 | 52.82 | 10.37 | | | | | | |

## UNBUNDLED NETWORK ELEMENTS - Mississippi

| CATEGORY | RATE ELEMENTS | Interim | Zone | BCS | USOC | RATES ($) | | | | | Svc Order Submitted Elec per LSR | Svc Order Submitted Manually per LSR | Attachment: 2 | | Exhibit: A | |
|---|---|---|---|---|---|---|---|---|---|---|---|---|---|---|---|---|
| | | | | | | | | | | | | | Incremental Charge - Manual Svc Order vs. Electronic-1st | Incremental Charge - Manual Svc Order vs. Electronic-Add'l | Incremental Charge - Manual Svc Order vs. Electronic-Disc 1st | Incremental Charge - Manual Svc Order vs. Electronic-Disc Add'l |
| | | | | | | Rec | Nonrecurring | | Nonrecurring Disconnect | | OSS Rates ($) | | | | | |
| | | | | | | | First | Add'l | First | Add'l | SOMEC | SOMAN | SOMAN | SOMAN | SOMAN | SOMAN |
| | Additional 2-wire ISDN COCI (BRITE) - in combination- per month | | | UNCNX | UC1CA | 2.62 | 6.62 | 4.74 | 0.00 | 0.00 | | | | | | |
| | Nonrecurring Currently Combined Network Elements Switch -As-Is Charge | | | UNC1X | UNCCC | | 5.63 | 5.63 | 7.20 | 7.20 | | | | | | |
| | **EXTENDED 4-WIRE DS1 DIGITAL EXTENDED LOOP WITH DEDICATED STS-1 INTEROFFICE TRANSPORT** | | | | | | | | | | | | | | | |
| | First DS1 Loop Combination - Zone 1 | | 1 | UNC1X | USLXX | 79.08 | 253.93 | 158.45 | 46.10 | 12.07 | | | | | | |
| | First DS1 Loop Combination - Zone 2 | | 2 | UNC1X | USLXX | 129.38 | 253.93 | 158.45 | 46.10 | 12.07 | | | | | | |
| | First DS1 Loop Combination - Zone 3 | | 3 | UNC1X | USLXX | 206.74 | 253.93 | 158.45 | 46.10 | 12.07 | | | | | | |
| | First DS1 Loop Combination - Zone 4 | | 4 | UNC1X | USLXX | 458.46 | 253.93 | 158.45 | 46.10 | 12.07 | | | | | | |
| | Interoffice Transport - Dedicated - STS-1 combination - Per Mile Per Month | | | UNCSX | 1L5XX | 4.29 | | | | | | | | | | |
| | Interoffice Transport - Dedicated - STS-1 combination - Facility Termination per month | | | UNCSX | U1TFS | 644.21 | 280.37 | 163.70 | 62.08 | 60.29 | | | | | | |
| | 3/1 Channel System in combination per month | | | UNCSX | MQ3 | 170.63 | 179.17 | 94.52 | 34.30 | 32.82 | | | | | | |
| | DS1 COCI in combination per month | | | UNC1X | UC1D1 | 2.62 | 6.62 | 4.74 | 0.00 | 0.00 | | | | | | |
| | Additional DS1Loop in the same STS-1 Interoffice Transport Combination - Zone 1 | | 1 | UNC1X | USLXX | 79.08 | 253.93 | 158.45 | 46.10 | 12.07 | | | | | | |
| | Additional DS1Loop in the same STS-1 Interoffice Transport Combination - Zone 2 | | 2 | UNC1X | USLXX | 129.38 | 253.93 | 158.45 | 46.10 | 12.07 | | | | | | |
| | Additional DS1Loop in the same STS-1 Interoffice Transport Combination - Zone 3 | | 3 | UNC1X | USLXX | 206.74 | 253.93 | 158.45 | 46.10 | 12.07 | | | | | | |
| | Additional DS1Loop in the same STS-1 Interoffice Transport Combination - Zone 4 | | 4 | UNC1X | USLXX | 458.46 | 253.93 | 158.45 | 46.10 | 12.07 | | | | | | |
| | DS1 COCI in combination per month | | | UNC1X | UC1D1 | 2.62 | 6.62 | 4.74 | 0.00 | 0.00 | | | | | | |
| | Nonrecurring Currently Combined Network Elements Switch -As-Is Charge | | | UNCSX | UNCCC | | 5.63 | 5.63 | 7.20 | 7.20 | | | | | | |
| | **EXTENDED 4-WIRE 56 KBPS DIGITAL EXTENDED LOOP WITH 56 KBPS INTEROFFICE TRANSPORT** | | | | | | | | | | | | | | | |
| | 4-wire 56 kbps Local Loop in combination - Zone 1 | | 1 | UNCDX | UDL56 | 27.44 | 126.53 | 88.85 | 60.68 | 14.64 | | | | | | |
| | 4-wire 56 kbps Local Loop in combination - Zone 2 | | 2 | UNCDX | UDL56 | 34.55 | 126.53 | 88.85 | 60.68 | 14.64 | | | | | | |
| | 4-wire 56 kbps Local Loop in combination - Zone 3 | | 3 | UNCDX | UDL56 | 40.76 | 126.53 | 88.85 | 60.68 | 14.64 | | | | | | |
| | 4-wire 56 kbps Local Loop in combination - Zone 4 | | 4 | UNCDX | UDL56 | 32.25 | 126.53 | 88.85 | 60.68 | 14.64 | | | | | | |
| | Interoffice Transport - Dedicated - 4-wire 56 kbps combination - Per Mile per month | | | UNCDX | 1L5XX | 0.0098 | | | | | | | | | | |
| | Interoffice Transport - Dedicated - 4-wire 56 kbps combination - Facility Termination per month | | | UNCDX | U1TD5 | 22.52 | 40.78 | 27.57 | 17.26 | 7.11 | | | | | | |
| | Nonrecurring Currently Combined Network Elements Switch -As-Is Charge | | | UNCDX | UNCCC | | 5.63 | 5.63 | 7.20 | 7.20 | | | | | | |
| | **EXTENDED 4-WIRE 64 KBPS DIGITAL EXTENDED LOOP WITH 64 KBPS INTEROFFICE TRANSPORT** | | | | | | | | | | | | | | | |
| | 4-wire 64 kbps Lcoal Loop in Combination - Zone 1 | | 1 | UNCDX | UDL64 | 27.44 | 126.53 | 88.85 | 60.68 | 14.64 | | | | | | |
| | 4-wire 64 kbps Lcoal Loop in Combination - Zone 2 | | 2 | UNCDX | UDL64 | 34.55 | 126.53 | 88.85 | 60.68 | 14.64 | | | | | | |
| | 4-wire 64 kbps Lcoal Loop in Combination - Zone 3 | | 3 | UNCDX | UDL64 | 40.76 | 126.53 | 88.85 | 60.68 | 14.64 | | | | | | |
| | 4-wire 64 kbps Lcoal Loop in Combination - Zone 4 | | 4 | UNCDX | UDL64 | 32.25 | 126.53 | 88.85 | 60.68 | 14.64 | | | | | | |
| | Interoffice Transport - Dedicated - 4-wire 64 kbps combination - Per Mile per month | | | UNCDX | 1L5XX | 0.0098 | | | | | | | | | | |
| | Interoffice Transport - Dedicated - 4-wire 64 kbps combination - Facility Termination per month | | | UNCDX | U1TD6 | 22.52 | 40.78 | 27.57 | 17.26 | 7.11 | | | | | | |
| | Nonrecurring Currently Combined Network Elements Switch -As-Is Charge | | | UNCDX | UNCCC | | 5.63 | 5.63 | 7.20 | 7.20 | | | | | | |
| | **EXTENDED 2-WIRE VOICE GRADE LOOP WITH DS1 INTEROFFICE TRANSPORT w/ 3/1 MUX** | | | | | | | | | | | | | | | |
| | First 2-wire VG Loop (SL2) in Combination - Zone 1 | | 1 | UNCVX | UEAL2 | 13.89 | 105.96 | 68.28 | 52.82 | 10.37 | | | | | | |
| | First 2-wire VG Loop (SL2) in Combination - Zone 2 | | 2 | UNCVX | UEAL2 | 18.75 | 105.96 | 68.28 | 52.82 | 10.37 | | | | | | |
| | First 2-wire VG Loop (SL2) in Combination - Zone 3 | | 3 | UNCVX | UEAL2 | 27.55 | 105.96 | 68.28 | 52.82 | 10.37 | | | | | | |
| | First 2-wire VG Loop (SL2) in Combination - Zone 4 | | 4 | UNCVX | UEAL2 | 45.72 | 105.96 | 68.28 | 52.82 | 10.37 | | | | | | |
| | First Interoffice Transport - Dedicated - DS1 combination - Per Mile | | | UNC1X | 1L5XX | 0.1813 | | | | | | | | | | |
| | First Interoffice Transport - Dedicated - DS1 combination - Facility Termination per month | | | UNC1X | U1TF1 | 51.72 | 89.79 | 82.28 | 16.86 | 14.90 | | | | | | |
| | Per each DS1 Channelization System Per Month | | | UNC1X | MQ1 | 102.85 | 91.57 | 62.94 | 10.87 | 10.10 | | | | | | |
| | Per each Voice Grade COCI - Per Month per month | | | UNCVX | 1D1VG | 0.5737 | 6.62 | 4.74 | | | | | | | | |

## UNBUNDLED NETWORK ELEMENTS - Mississippi

| CATEGORY | | RATE ELEMENTS | Interim | Zone | BCS | USOC | RATES ($) | | | | | Svc Order Submitted Elec per LSR | Svc Order Submitted Manually per LSR | Attachment: 2 Incremental Charge - Manual Svc Order vs. Electronic-1st | Attachment: 2 Incremental Charge - Manual Svc Order vs. Electronic-Add'l | Exhibit: A Incremental Charge - Manual Svc Order vs. Electronic-Disc 1st | Exhibit: A Incremental Charge - Manual Svc Order vs. Electronic-Disc Add'l |
|---|---|---|---|---|---|---|---|---|---|---|---|---|---|---|---|---|---|
| | | | | | | | Rec | Nonrecurring | | Nonrecurring Disconnect | | OSS Rates ($) | | | | | |
| | | | | | | | | First | Add'l | First | Add'l | SOMEC | SOMAN | SOMAN | SOMAN | SOMAN | SOMAN |
| | | 3/1 Channel System in combination per month | | | UNC3X | MQ3 | 170.63 | 179.17 | 94.52 | 34.30 | 32.82 | | | | | | |
| | | Per each DS1 COCI in combination per month | | | UNC1X | UC1D1 | 2.62 | 6.62 | 4.74 | 0.00 | 0.00 | | | | | | |
| | | Each Additional 2-Wire VG Loop(SL 2) in the same DS1 Interoffice Transport Combination - Zone 1 | | 1 | UNCVX | UEAL2 | 13.89 | 105.96 | 68.28 | 52.82 | 10.37 | | | | | | |
| | | Each Additional 2-Wire VG Loop(SL2) in the same DS1 Interoffice Transport Combination - Zone 2 | | 2 | UNCVX | UEAL2 | 18.75 | 105.96 | 68.28 | 52.82 | 10.37 | | | | | | |
| | | Each Additional 2-Wire VG Loop(SL2) in the same DS1 Interoffice Transport Combination - Zone 3 | | 3 | UNCVX | UEAL2 | 27.55 | 105.96 | 68.28 | 52.82 | 10.37 | | | | | | |
| | | Each Additional 2-Wire VG Loop(SL2) in the same DS1 Interoffice Transport Combination - Zone 4 | | 4 | UNCVX | UEAL2 | 45.72 | 105.96 | 68.28 | 52.82 | 10.37 | | | | | | |
| | | Each Additional Voice Grade COCI in combination - per month | | | UNCVX | 1D1VG | 0.5737 | 6.62 | 4.74 | | | | | | | | |
| | | Each Additional DS1 Interoffice Channel per mile in same 3/1 Channel System per month | | | UNC1X | 1L5XX | 0.1813 | | | | | | | | | | |
| | | Each Additional DS1 Interoffice Channel Facility Termination in same 3/1 Channel System per month | | | UNC1X | U1TF1 | 51.72 | 89.79 | 82.28 | 16.86 | 14.90 | | | | | | |
| | | Each Additional DS1 COCI combination per month | | | UNC1X | UC1D1 | 2.62 | 6.62 | 4.74 | 0.00 | 0.00 | | | | | | |
| | | Nonrecurring Currently Combined Network Elements Switch -As-Is Charge | | | UNC1X | UNCCC | | 5.63 | 5.63 | 7.20 | 7.20 | | | | | | |
| | | **EXTENDED 4-WIRE VOICE GRADE LOOP WITH DEDICATED DS1 INTEROFFICE TRANSPORT w/ 3/1 MUX** | | | | | | | | | | | | | | | |
| | | First 4-Wire Analog Voice Grade Local Loop in Combination - Zone 1 | | 1 | UNCVX | UEAL4 | 27.47 | 132.27 | 94.59 | 60.68 | 14.64 | | | | | | |
| | | First 4-Wire Analog Voice Grade Local Loop in Combination - Zone 2 | | 2 | UNCVX | UEAL4 | 38.26 | 132.27 | 94.59 | 60.68 | 14.64 | | | | | | |
| | | First 4-Wire Analog Voice Grade Local Loop in Combination - Zone 3 | | 3 | UNCVX | UEAL4 | 50.03 | 132.27 | 94.59 | 60.68 | 14.64 | | | | | | |
| | | First 4-Wire Analog Voice Grade Local Loop in Combination - Zone 4 | | 4 | UNCVX | UEAL4 | 50.03 | 132.27 | 94.59 | 60.68 | 14.64 | | | | | | |
| | | First Interoffice Transport - Dedicated - DS1 combination - Per Mile Per Month | | | UNC1X | 1L5XX | 0.1813 | | | | | | | | | | |
| | | First Interoffice Transport - Dedicated - DS1 - Facility Termination Per Month | | | UNC1X | U1TF1 | 51.72 | 89.79 | 82.28 | 16.86 | 14.90 | | | | | | |
| | | Per each 1/0 Channel System in combination Per Month | | | UNC1X | MQ1 | 102.85 | 91.57 | 62.94 | 10.87 | 10.10 | | | | | | |
| | | Per each Voice Grade COCI in combination - per month | | | UNCVX | 1D1VG | 0.5737 | 6.62 | 4.74 | | | | | | | | |
| | | 3/1 Channel System in combination per month | | | UNC3X | MQ3 | 170.63 | 179.17 | 94.52 | 34.30 | 34.30 | | | | | | |
| | | Per each DS1 COCI in combination per month | | | UNC1X | UC1D1 | 2.62 | 6.62 | 4.74 | 0.00 | 0.00 | | | | | | |
| | | Additional 4-Wire Analog Voice Grade Loop in same DS1 Interoffice Transport Combination - Zone 1 | | 1 | UNCVX | UEAL4 | 27.47 | 132.27 | 94.59 | 60.68 | 14.64 | | | | | | |
| | | Additional 4-Wire Analog Voice Grade Loop in same DS1 Interoffice Transport Combination - Zone 2 | | 2 | UNCVX | UEAL4 | 38.26 | 132.27 | 94.59 | 60.68 | 14.64 | | | | | | |
| | | Additional 4-Wire Analog Voice Grade Loop in same DS1 Interoffice Transport Combination - Zone 3 | | 3 | UNCVX | UEAL4 | 50.03 | 132.27 | 94.59 | 60.68 | 14.64 | | | | | | |
| | | Additional 4-Wire Analog Voice Grade Loop in same DS1 Interoffice Transport Combination - Zone 4 | | 4 | UNCVX | UEAL4 | 50.03 | 132.27 | 94.59 | 60.68 | 14.64 | | | | | | |
| | | Each Additional DS1 Interoffice Channel per mile in same 3/1 Channel System per month | | | UNC1X | 1L5XX | 0.1813 | | | | | | | | | | |
| | | Each Additional DS1 Interoffice Channel Facility Termination in same 3/1 Channel System per month | | | UNC1X | U1TF1 | 51.72 | 89.79 | 82.28 | 16.86 | 14.90 | | | | | | |
| | | Additional Voice Grade COCI - in combination - per month | | | UNCVX | 1D1VG | 0.5737 | 6.62 | 4.74 | | | | | | | | |
| | | Nonrecurring Currently Combined Network Elements Switch -As-Is Charge | | | UNC1X | UNCCC | | 5.63 | 5.63 | 7.20 | 7.20 | | | | | | |
| | | **EXTENDED 4-WIRE 56 KBPS DIGITAL LOOP WITH DEDICATED DS1 INTEROFFICE TRANSPORT w/ 3/1 MUX** | | | | | | | | | | | | | | | |
| | | First 4-Wire 56Kbps Digital Grade Local Loop in Combination - Zone 1 | | 1 | UNCDX | UDL56 | 27.44 | 126.53 | 88.85 | 60.68 | 14.64 | | | | | | |
| | | First 4-Wire 56Kbps Digital Grade Local Loop in Combination - Zone 2 | | 2 | UNCDX | UDL56 | 34.55 | 126.53 | 88.85 | 60.68 | 14.64 | | | | | | |
| | | First 4-Wire 56Kbps Digital Grade Local Loop in Combination - Zone 3 | | 3 | UNCDX | UDL56 | 40.76 | 126.53 | 88.85 | 60.68 | 14.64 | | | | | | |
| | | First 4-Wire 56Kbps Digital Grade Local Loop in Combination - Zone 4 | | 4 | UNCDX | UDL56 | 32.25 | 126.53 | 88.85 | 60.68 | 14.64 | | | | | | |

| UNBUNDLED NETWORK ELEMENTS - Mississippi | | | | | | | | | | | | | | Attachment: 2 | | Exhibit: A | |
|---|---|---|---|---|---|---|---|---|---|---|---|---|---|---|---|---|---|
| CATEGORY | | RATE ELEMENTS | Interim | Zone | BCS | USOC | RATES ($) | | | | | Svc Order Submitted Elec per LSR | Svc Order Submitted Manually per LSR | Incremental Charge - Manual Svc Order vs. Electronic-1st | Incremental Charge - Manual Svc Order vs. Electronic-Add'l | Incremental Charge - Manual Svc Order vs. Electronic-Disc 1st | Incremental Charge - Manual Svc Order vs. Electronic-Disc Add'l |
| | | | | | | | Rec | Nonrecurring | | Nonrecurring Disconnect | | OSS Rates ($) | | | | | |
| | | | | | | | | First | Add'l | First | Add'l | SOMEC | SOMAN | SOMAN | SOMAN | SOMAN | SOMAN |
| | | First Interoffice Transport - Dedicated - DS1 combination - Per Mile Per Month | | | UNC1X | 1L5XX | 0.1813 | | | | | | | | | | |
| | | First Interoffice Transport - Dedicated - DS1 - combination Facility Termination Per Month | | | UNC1X | U1TF1 | 51.72 | 89.79 | 82.28 | 16.86 | 14.90 | | | | | | |
| | | Per each 1/0 Channel System in combination Per Month | | | UNC1X | MQ1 | 102.85 | 91.57 | 62.94 | 10.87 | 10.10 | | | | | | |
| | | Per each OCU-DP COCI (data) COCI per month (2.4-64kbs) | | | UNCDX | 1D1DD | 1.22 | 6.62 | 4.74 | 0.00 | 0.00 | | | | | | |
| | | 3/1 Channel System in combination per month | | | UNC3X | MQ3 | 170.63 | 179.17 | 94.52 | 34.30 | 32.82 | | | | | | |
| | | Per each DS1 COCI in combination per month | | | UNC1X | UC1D1 | 2.62 | 6.62 | 4.74 | 0.00 | 0.00 | | | | | | |
| | | Additional 4-Wire 56Kbps Digital Grade Loop in same DS1 Interoffice Transport Combination - Zone 1 | | 1 | UNCDX | UDL56 | 27.44 | 126.53 | 88.85 | 60.68 | 14.64 | | | | | | |
| | | Additional 4-Wire 56Kbps Digital Grade Loop in same DS1 Interoffice Transport Combination - Zone 2 | | 2 | UNCDX | UDL56 | 34.55 | 126.53 | 88.85 | 60.68 | 14.64 | | | | | | |
| | | Additional 4-Wire 56Kbps Digital Grade Loop in same DS1 Interoffice Transport Combination - Zone 3 | | 3 | UNCDX | UDL56 | 40.76 | 126.53 | 88.85 | 60.68 | 14.64 | | | | | | |
| | | Additional 4-Wire 56Kbps Digital Grade Loop in same DS1 Interoffice Transport Combination - Zone 4 | | 4 | UNCDX | UDL56 | 32.25 | 126.53 | 88.85 | 60.68 | 14.64 | | | | | | |
| | | OCU-DP COCI (data) COCI in combination per month (2.4-64kbs) | | | UNCDX | 1D1DD | 1.22 | 6.62 | 4.74 | 0.00 | 0.00 | | | | | | |
| | | Each Additional DS1 Interoffice Channel per mile in same 3/1 Channel System per month | | | UNC1X | 1L5XX | 0.1813 | | | | | | | | | | |
| | | Each Additional DS1 Interoffice Channel Facility Termination in same 3/1 Channel System per month | | | UNC1X | U1TF1 | 51.72 | 89.79 | 82.28 | 16.86 | 14.90 | | | | | | |
| | | Each Additional DS1 COCI in the same 3/1 channel system combination per month | | | UNC1X | UC1D1 | 2.62 | 6.62 | 4.74 | 0.00 | 0.00 | | | | | | |
| | | Nonrecurring Currently Combined Network Elements Switch -As-Is Charge | | | UNC1X | UNCCC | | 5.63 | 5.63 | 7.20 | 7.20 | | | | | | |
| | | **EXTENDED 4-WIRE 64 KBPS DIGITAL LOOP WITH DEDICATED DS1 INTEROFFICE TRANSPORT w/ 3/1 MUX** | | | | | | | | | | | | | | | |
| | | First 4-Wire 64Kbps Digital Grade Loop in a DS1 Interoffice Transport Combination - Zone 1 | | 1 | UNCDX | UDL64 | 27.44 | 126.53 | 88.85 | 60.68 | 14.64 | | | | | | |
| | | First 4-Wire 64Kbps Digital Grade Loop in a DS1 Interoffice Transport Combination - Zone 2 | | 2 | UNCDX | UDL64 | 34.55 | 126.53 | 88.85 | 60.68 | 14.64 | | | | | | |
| | | First 4-Wire 64Kbps Digital Grade Loop in a DS1 Interoffice Transport Combination - Zone 3 | | 3 | UNCDX | UDL64 | 40.76 | 126.53 | 88.85 | 60.68 | 14.64 | | | | | | |
| | | First 4-Wire 64Kbps Digital Grade Loop in a DS1 Interoffice Transport Combination - Zone 4 | | 4 | UNCDX | UDL64 | 32.25 | 126.53 | 88.85 | 60.68 | 14.64 | | | | | | |
| | | First Interoffice Transport - Dedicated - DS1 combination - Per Mile Per Month | | | UNC1X | 1L5XX | 0.1813 | | | | | | | | | | |
| | | First Interoffice Transport - Dedicated - DS1 combination - Facility Termination Per Month | | | UNC1X | U1TF1 | 51.72 | 89.79 | 82.28 | 16.86 | 14.90 | | | | | | |
| | | Per each Channel System 1/0 in combination Per Month | | | UNC1X | MQ1 | 102.85 | 91.57 | 62.94 | 10.87 | 10.10 | | | | | | |
| | | Per each OCU-DP COCI (data) in combination - per month (2.4-64kbs) | | | UNCDX | 1D1DD | 1.22 | 6.62 | 4.74 | 0.00 | 0.00 | | | | | | |
| | | 3/1 Channel System in combination per month | | | UNC3X | MQ3 | 170.63 | 179.17 | 94.52 | 34.30 | 32.82 | | | | | | |
| | | Per each DS1 COCI in combination per month | | | UNC1X | UC1D1 | 2.62 | 6.62 | 4.74 | 0.00 | 0.00 | | | | | | |
| | | Additional 4-Wire 64Kbps Digital Grade Loop in same DS1 Interoffice Transport Combination - Zone 1 | | 1 | UNCDX | UDL64 | 27.44 | 126.53 | 88.85 | 60.68 | 14.64 | | | | | | |
| | | Additional 4-Wire 64Kbps Digital Grade Loop in same DS1 Interoffice Transport Combination - Zone 2 | | 2 | UNCDX | UDL64 | 34.55 | 126.53 | 88.85 | 60.68 | 14.64 | | | | | | |
| | | Additional 4-Wire 64Kbps Digital Grade Loop in same DS1 Interoffice Transport Combination - Zone 3 | | 3 | UNCDX | UDL64 | 40.76 | 126.53 | 88.85 | 60.68 | 14.64 | | | | | | |
| | | Additional 4-Wire 64Kbps Digital Grade Loop in same DS1 Interoffice Transport Combination - Zone 4 | | 4 | UNCDX | UDL64 | 32.25 | 126.53 | 88.85 | 60.68 | 14.64 | | | | | | |
| | | Additional OCU-DP COCI (data) - DS1 to DS0 Channel System combination - per month (2.4-64kbs) | | | UNCDX | 1D1DD | 1.22 | 6.62 | 4.74 | 0.00 | 0.00 | | | | | | |
| | | Each Additional DS1 Interoffice Channel per mile in same 3/1 Channel System per month | | | UNC1X | 1L5XX | 0.1813 | | | | | | | | | | |
| | | Each Additional DS1 Interoffice Channel Facility Termination in same 3/1 Channel System per month | | | UNC1X | U1TF1 | 51.72 | 89.79 | 82.28 | 16.86 | 14.90 | | | | | | |

CCCS 336 of 1253

| UNBUNDLED NETWORK ELEMENTS - Mississippi | | | | | | | | | | | | | | Attachment: 2 | | Exhibit: A | |
|---|---|---|---|---|---|---|---|---|---|---|---|---|---|---|---|---|---|
| CATEGORY | | RATE ELEMENTS | Interim | Zone | BCS | USOC | RATES ($) | | | | | Svc Order Submitted Elec per LSR | Svc Order Submitted Manually per LSR | Incremental Charge - Manual Svc Order vs. Electronic-1st | Incremental Charge - Manual Svc Order vs. Electronic-Add'l | Incremental Charge - Manual Svc Order vs. Electronic-Disc 1st | Incremental Charge - Manual Svc Order vs. Electronic-Disc Add'l |
| | | | | | | | Rec | Nonrecurring | | Nonrecurring Disconnect | | OSS Rates ($) | | | | | |
| | | | | | | | | First | Add'l | First | Add'l | SOMEC | SOMAN | SOMAN | SOMAN | SOMAN | SOMAN |
| | | Each Additional DS1 COCI in the same 3/1 channel system combination per month | | | UNC1X | UC1D1 | 2.62 | 6.62 | 4.74 | 0.00 | 0.00 | | | | | | |
| | | Nonrecurring Currently Combined Network Elements Switch -As-Is Charge | | | UNC1X | UNCCC | | 5.63 | 5.63 | 7.20 | 7.20 | | | | | | |
| | EXTENDED 2-WIRE ISDN LOOP WITH DS1 INTEROFFICE TRANSPORT w/ 3/1 MUX | | | | | | | | | | | | | | | | |
| | | First 2-Wire ISDN Loop in a DS1 Interoffice Combination Transport - Zone 1 | | 1 | UNCNX | U1L2X | 21.01 | 117.61 | 79.92 | 52.82 | 10.37 | | | | | | |
| | | First 2-Wire ISDN Loop in a DS1 Interoffice Combination Transport - Zone 2 | | 2 | UNCNX | U1L2X | 27.59 | 117.61 | 79.92 | 52.82 | 10.37 | | | | | | |
| | | First 2-Wire ISDN Loop in a DS1 Interoffice Combination Transport - Zone 3 | | 3 | UNCNX | U1L2X | 37.34 | 117.61 | 79.92 | 52.82 | 10.37 | | | | | | |
| | | First 2-Wire ISDN Loop in a DS1 Interoffice Combination Transport - Zone 4 | | 4 | UNCNX | U1L2X | 59.18 | 117.61 | 79.92 | 52.82 | 10.37 | | | | | | |
| | | First Interoffice Transport - Dedicated - DS1 combination - Per Mile per month | | | UNC1X | 1L5XX | 0.1813 | | | | | | | | | | |
| | | First Interoffice Transport - Dedicated - DS1 combination - Facility Termination per month | | | UNC1X | U1TF1 | 51.72 | 89.79 | 82.28 | 16.86 | 14.90 | | | | | | |
| | | Per each Channel System 1/0 in combination - per month | | | UNC1X | MQ1 | 102.85 | 91.57 | 62.94 | 10.87 | 10.10 | | | | | | |
| | | Per each 2-wire ISDN COCI (BRITE) in combination - per month | | | UNCNX | UC1CA | 2.62 | 6.62 | 4.74 | 0.00 | 0.00 | | | | | | |
| | | 3/1 Channel System in combination per month | | | UNC3X | MQ3 | 170.63 | 179.17 | 94.52 | 34.30 | 32.82 | | | | | | |
| | | Per each DS1 COCI in combination per month | | | UNC1X | UC1D1 | 2.62 | 6.62 | 4.74 | 0.00 | 0.00 | | | | | | |
| | | Additional 2-wire ISDN Loop in same DS1Interoffice Transport Combination - Zone 1 | | 1 | UNCNX | U1L2X | 21.01 | 117.61 | 79.92 | 52.82 | 10.37 | | | | | | |
| | | Additional 2-wire ISDN Loop in same DS1Interoffice Transport Combination - Zone 2 | | 2 | UNCNX | U1L2X | 27.59 | 117.61 | 79.92 | 52.82 | 10.37 | | | | | | |
| | | Additional 2-wire ISDN Loop in same DS1Interoffice Transport Combination - Zone 3 | | 3 | UNCNX | U1L2X | 37.34 | 117.61 | 79.92 | 52.82 | 10.37 | | | | | | |
| | | Additional 2-wire ISDN Loop in same DS1Interoffice Transport Combination - Zone 4 | | 4 | UNCNX | U1L2X | 59.18 | 117.61 | 79.92 | 52.82 | 10.37 | | | | | | |
| | | Additional 2-wire ISDN COCI (BRITE) in same 1/0 channel system combination- per month | | | UNCNX | UC1CA | 2.62 | 6.62 | 4.74 | 0.00 | 0.00 | | | | | | |
| | | Each Additional DS1 Interoffice Channel per mile in same 3/1 Channel System per month | | | UNC1X | 1L5XX | 0.1813 | | | | | | | | | | |
| | | Each Additional DS1 Interoffice Channel Facility Termination in same 3/1 Channel System per month | | | UNC1X | U1TF1 | 51.72 | 89.79 | 82.28 | 16.86 | 14.90 | | | | | | |
| | | Each Additional DS1 COCI in the same 3/1 channel system combination per month | | | UNC1X | UC1D1 | 2.62 | 6.62 | 4.74 | 0.00 | 0.00 | | | | | | |
| | | Nonrecurring Currently Combined Network Elements Switch -As-Is Charge | | | UNC1X | UNCCC | | 5.63 | 5.63 | 7.20 | 7.20 | | | | | | |
| | EXTENDED 4-WIRE DS1 LOOP WITH DEDICATED DS1 INTEROFFICE TRANSPORT w/ 3/1 MUX | | | | | | | | | | | | | | | | |
| | | First 4-wire DS1 Digital Lcoal Loop in Combination - Zone 1 | | 1 | UNC1X | USLXX | 79.08 | 253.93 | 158.45 | 46.10 | 12.07 | | | | | | |
| | | First 4-wire DS1 Digital Lcoal Loop in Combination - Zone 2 | | 2 | UNC1X | USLXX | 129.38 | 253.93 | 158.45 | 46.10 | 12.07 | | | | | | |
| | | First 4-wire DS1 Digital Lcoal Loop in Combination - Zone 3 | | 3 | UNC1X | USLXX | 206.74 | 253.93 | 158.45 | 46.10 | 12.07 | | | | | | |
| | | First 4-wire DS1 Digital Lcoal Loop in Combination - Zone 4 | | 4 | UNC1X | USLXX | 458.46 | 253.93 | 158.45 | 46.10 | 12.07 | | | | | | |
| | | First Interoffice Transport - Dedicated - DS1 combination - Per Mile Per Month | | | UNC1X | 1L5XX | 0.1813 | | | | | | | | | | |
| | | First Interoffice Transport - Dedicated - DS1 combination - Facility Termination Per Month | | | UNC1X | U1TF1 | 51.72 | 89.79 | 82.28 | 16.86 | 14.90 | | | | | | |
| | | 3/1 Channel System in combination per month | | | UNC3X | MQ3 | 170.63 | 179.17 | 94.52 | 34.30 | 32.82 | | | | | | |
| | | Per each DS1 COCI combination per month | | | UNC1X | UC1D1 | 2.62 | 6.62 | 4.74 | 0.00 | 0.00 | | | | | | |
| | | Each Additional DS1 Interoffice Channel per mile in same 3/1 Channel System per month | | | UNC1X | 1L5XX | 0.1813 | | | | | | | | | | |
| | | Each Additional DS1 Interoffice Channel Facility Termination in same 3/1 Channel System per month | | | UNC1X | U1TF1 | 51.72 | 89.79 | 82.28 | 16.86 | 14.90 | | | | | | |
| | | Each Additional DS1 COCI in the same 3/1 channel system combination per month | | | UNC1X | UC1D1 | 2.62 | 6.62 | 4.74 | 0.00 | 0.00 | | | | | | |
| | | Additional 4-Wire DS1 Digital Local Loop in Combination - Zone 1 | | 1 | UNC1X | USLXX | 79.08 | 253.93 | 158.45 | 46.10 | 12.07 | | | | | | |

| UNBUNDLED NETWORK ELEMENTS - Mississippi | | | | | | | | | | | | | | Attachment: 2 | | Exhibit: A | |
|---|---|---|---|---|---|---|---|---|---|---|---|---|---|---|---|---|---|
| CATEGORY | RATE ELEMENTS | Interim | Zone | BCS | USOC | RATES ($) | | | | | Svc Order Submitted Elec per LSR | Svc Order Submitted Manually per LSR | Incremental Charge - Manual Svc Order vs. Electronic-1st | Incremental Charge - Manual Svc Order vs. Electronic-Add'l | Incremental Charge - Manual Svc Order vs. Electronic-Disc 1st | Incremental Charge - Manual Svc Order vs. Electronic-Disc Add'l |
| | | | | | | Rec | Nonrecurring | | Nonrecurring Disconnect | | OSS Rates ($) | | | | | |
| | | | | | | | First | Add'l | First | Add'l | SOMEC | SOMAN | SOMAN | SOMAN | SOMAN | SOMAN |
| | Additional 4-Wire DS1 Digital Local Loop in Combination - Zone 2 | | 2 | UNC1X | USLXX | 129.38 | 253.93 | 158.45 | 46.10 | 12.07 | | | | | | |
| | Additional 4-Wire DS1 Digital Local Loop in Combination - Zone 3 | | 3 | UNC1X | USLXX | 206.74 | 253.93 | 158.45 | 46.10 | 12.07 | | | | | | |
| | Additional 4-Wire DS1 Digital Local Loop in Combination - Zone 4 | | 4 | UNC1X | USLXX | 458.46 | 253.93 | 158.45 | 46.10 | 12.07 | | | | | | |
| | Nonrecurring Currently Combined Network Elements Switch -As-Is Charge | | | UNC1X | UNCCC | | 5.63 | 5.63 | 7.20 | 7.20 | | | | | | |
| | **EXTENDED 4-WIRE 56 KBPS DIGITAL EXTENDED LOOP WITH DS0 INTEROFFICE TRANSPORT** | | | | | | | | | | | | | | | |
| | First 4-wire 56 kbps Local Loop in combination - Zone 1 | | 1 | UNCDX | UDL56 | 27.44 | 126.53 | 88.85 | 60.68 | 14.64 | | | | | | |
| | First 4-wire 56 kbps Local Loop in combination - Zone 2 | | 2 | UNCDX | UDL56 | 34.55 | 126.53 | 88.85 | 60.68 | 14.64 | | | | | | |
| | First 4-wire 56 kbps Local Loop in combination - Zone 3 | | 3 | UNCDX | UDL56 | 40.76 | 126.53 | 88.85 | 60.68 | 14.64 | | | | | | |
| | First 4-wire 56 kbps Local Loop in combination - Zone 4 | | 4 | UNCDX | UDL56 | 32.25 | 126.53 | 88.85 | 60.68 | 14.64 | | | | | | |
| | First 4-wiree 56 kbps Interoffice Transport - Dedicated - Per Mile per month | | | UNCDX | 1L5XX | 0.0098 | | | | | | | | | | |
| | First 4-wire 56 kbps Interoffice Transport - Dedicated - Facility Termination per month | | | UNCDX | U1TD5 | 22.52 | 40.78 | 27.57 | 17.26 | 7.11 | | | | | | |
| | Nonrecurring Currently Combined Network Elements Switch -As-Is Charge | | | UNCDX | UNCCC | | 5.63 | 5.63 | 7.20 | 7.20 | | | | | | |
| | **EXTENDED 4-WIRE 64 KBPS DIGITAL EXTENDED LOOP WITH DS0 INTEROFFICE TRANSPORT** | | | | | | | | | | | | | | | |
| | First 4-wire 64 kbps Local Loop in combination - Zone 1 | | 1 | UNCDX | UDL64 | 27.44 | 126.53 | 88.85 | 60.68 | 14.64 | | | | | | |
| | First 4-wire 64 kbps Local Loop in combination - Zone 2 | | 2 | UNCDX | UDL64 | 34.55 | 126.53 | 88.85 | 60.68 | 14.64 | | | | | | |
| | First 4-wire 64 kbps Local Loop in combination - Zone 3 | | 3 | UNCDX | UDL64 | 40.76 | 126.53 | 88.85 | 60.68 | 14.64 | | | | | | |
| | First 4-wire 64 kbps Local Loop in combination - Zone 4 | | 4 | UNCDX | UDL64 | 32.25 | 126.53 | 88.85 | 60.68 | 14.64 | | | | | | |
| | First I4-wire 65 kbps Interoffice Transport - Dedicated - Per Mile per month | | | UNCDX | 1L5XX | 0.0098 | | | | | | | | | | |
| | First 4-wire 64 kbps Interoffice Transport - Dedicated - Facility Termination per month | | | UNCDX | U1TD6 | 22.52 | 40.78 | 27.57 | 17.26 | 7.11 | | | | | | |
| | Nonrecurring Currently Combined Network Elements Switch -As-Is Charge | | | UNCDX | UNCCC | | 5.63 | 5.63 | 7.20 | 7.20 | | | | | | |
| **ADDITIONAL NETWORK ELEMENTS** | | | | | | | | | | | | | | | | |
| | **When used as a part of a currently combined facility, the non-recurrng charges do not apply, but a Switch As Is charge does apply.** | | | | | | | | | | | | | | | |
| | **When used as ordinarily combined network elements in All States, the non-recurring charges apply and the Switch As Is Charge does not.** | | | | | | | | | | | | | | | |
| | **Nonrecurring Currently Combined Network Elements "Switch As Is" Charge (One applies to each combination)** | | | | | | | | | | | | | | | |
| | Nonrecurring Currently Combined Network Elements Switch -As-Is Charge - 2 wire/4-Wire VG | | | UNCVX | UNCCC | | 5.63 | 5.63 | 7.20 | 7.20 | | | | | | |
| | Nonrecurring Currently Combined Network Elements Switch -As-Is Charge - 56/64 kbps | | | UNCDX | UNCCC | | 5.63 | 5.63 | 7.20 | 7.20 | | | | | | |
| | Nonrecurring Currently Combined Network Elements Switch -As-Is Charge - DS1 | | | UNC1X | UNCCC | | 5.63 | 5.63 | 7.20 | 7.20 | | | | | | |
| | Nonrecurring Currently Combined Network Elements Switch -As-Is Charge - DS3 | | | UNC3X | UNCCC | | 5.63 | 5.63 | 7.20 | 7.20 | | | | | | |
| | Nonrecurring Currently Combined Network Elements Switch -As-Is Charge - STS1 | | | UNCSX | UNCCC | | 5.63 | 5.63 | 7.20 | 7.20 | | | | | | |
| | **Optional Features & Functions:** | | | | | | | | | | | | | | | |
| | Clear Channel Capability Extended Frame Option - per DS1 | I | | U1TD1, ULDD1,UNC1X | CCOEF | | 0I | 0I | 0I | 0I | | | | | | |
| | Clear Channel Capability Super FrameOption - per DS1 | I | | U1TD1, ULDD1,UNC1X | CCOSF | | 0I | 0I | 0I | 0I | | | | | | |
| | Clear Channel Capability (SF/ESF) Option - Subsequent Activity - per DS1 | I | | ULDD1, U1TD1, UNC1X, USL | NRCCC | | 184.6S | 23.78S | 1.96S | 0.76S | | | | | | |
| | C-bit Parity Option - Subsequent Activity - per DS3 | i | | U1TD3, ULDD3, UE3, UNC3X | NRCC3 | | 218.72S | 7.66S | .7201S | 0S | | | | | | |
| | **MULTIPLEXERS** | | | | | | | | | | | | | | | |
| | DS1 to DS0 Channel System per month | | | UNC1X | MQ1 | 102.85 | 91.57 | 62.94 | 10.87 | 10.10 | | | | | | |
| | OCU-DP COCI (data) - DS1 to DS0 Channel System - per month (2.4-64kbs) used for a Local Loop | | | UDL | 1D1DD | 1.22 | 6.62 | 4.74 | | | | | | | | |

| UNBUNDLED NETWORK ELEMENTS - Mississippi | | | | | | | | | | | | | Attachment: 2 | | Exhibit: A | |
|---|---|---|---|---|---|---|---|---|---|---|---|---|---|---|---|---|
| CATEGORY | RATE ELEMENTS | Interim | Zone | BCS | USOC | RATES ($) | | | | | Svc Order Submitted Elec per LSR | Svc Order Submitted Manually per LSR | Incremental Charge - Manual Svc Order vs. Electronic-1st | Incremental Charge - Manual Svc Order vs. Electronic-Add'l | Incremental Charge - Manual Svc Order vs. Electronic-Disc 1st | Incremental Charge - Manual Svc Order vs. Electronic-Disc Add'l |
| | | | | | | Rec | Nonrecurring | | Nonrecurring Disconnect | | OSS Rates ($) | | | | | |
| | | | | | | | First | Add'l | First | Add'l | SOMEC | SOMAN | SOMAN | SOMAN | SOMAN | SOMAN |
| | OCU-DP COCI (data) - DS1 to DS0 Channel System - per month (2.4-64kbs) used for connection to a channelized DS1 Local Channel in the same SWC as collocation | | | U1TUD | 1D1DD | 1.22 | 6.62 | 4.74 | | | | | | | | |
| | 2-wire ISDN COCI (BRITE) - DS1 to DS0 Channel Systsem - per month for a Local Loop | | | UDN | UC1CA | 2.62 | 6.62 | 4.74 | | | | | | | | |
| | 2-wire ISDN COCI (BRITE) - DS1 to DS0 Channel Systsem - per month used for connection to a channelized DS1 Local Channel in the same SWC as collocation | | | U1TUB | UC1CA | 2.62 | 6.62 | 4.74 | | | | | | | | |
| | Voice Grade COCI - DS1 to DS0 Channel System - per month used for a Local Loop | | | UEA | 1D1VG | 0.5737 | 6.62 | 4.74 | | | | | | | | |
| | Voice Grade COCI - DS1 to DS0 Channel System - per month used for connection to a channelized DS1 Local Channel in the same SWC as collocation | | | U1TUC | 1D1VG | 0.5737 | 6.62 | 4.74 | | | | | | | | |
| | DS3 to DS1 Channel System per month | | | UNC3X | MQ3 | 170.63 | 179.17 | 94.52 | 34.30 | 32.82 | | | | | | |
| | STS-1 to DS1 Channel System per month | | | UNCSX | MQ3 | 170.63 | 179.17 | 94.52 | 34.30 | 32.82 | | | | | | |
| | DS1 COCI used with Loop per month | | | USL | UC1D1 | 12.96 | 6.62 | 4.74 | | | | | | | | |
| | DS1 COCI (used for connection to a channelized DS1 Local Channel in the same SWC as collocation) per month | | | U1TUA | UC1D1 | 12.96 | 6.62 | 4.74 | | | | | | | | |
| | DS1 COCI used with Interoffice Channel per month | | | U1TD1 | UC1D1 | 12.96 | 6.62 | 4.74 | | | | | | | | |
| | DS3 Interface Unit (DS1 COCI) used with Local Channel per month | | | ULDD1 | UC1D1 | 12.96 | 6.62 | 4.74 | | | | | | | | |
| **UNBUNDLED LOCAL EXCHANGE SWITCHING(PORTS)** | | | | | | | | | | | | | | | | |
| **Exchange Ports** | | | | | | | | | | | | | | | | |
| **NOTE: Although the Port Rate includes all available features in GA, KY, LA & TN, the desired features will need to be ordered using retail USOCs** | | | | | | | | | | | | | | | | |
| **2-WIRE VOICE GRADE LINE PORT RATES (RES)** | | | | | | | | | | | | | | | | |
| | Exchange Ports - 2-Wire Analog Line Port- Res. | | | UEPSR | UEPRL | 1.41 | 2.39 | 2.29 | 1.42 | 1.33 | | | | | | |
| | Exchange Ports - 2-Wire Analog Line Port with Caller ID - Res. | | | UEPSR | UEPRC | 1.41 | 2.39 | 2.29 | 1.42 | 1.33 | | | | | | |
| | Exchange Ports - 2-Wire Analog Line Port outgoing only - Res. | | | UEPSR | UEPRO | 1.41 | 2.39 | 2.29 | 1.42 | 1.33 | | | | | | |
| | Exchange Ports - 2-Wire VG unbundled MS extended local dialing parity Port with Caller ID - Res. | | | UEPSR | UEPAT | 1.41 | 2.39 | 2.29 | 1.42 | 1.33 | | | | | | |
| | Exchange Ports - 2-Wire VG unbundled res, low usage line port with Caller ID (LUM) | | | UEPSR | UEPAP | 1.41 | 2.39 | 2.29 | 1.42 | 1.33 | | | | | | |
| | Exchange Ports - 2-Wire Voice Mississippi Residence Dialing Plan without Caller ID | | | UEPSR | UEPWJ | 1.41 | 2.39 | 2.29 | 1.42 | 1.33 | | | | | | |
| | 2-Wire voice unbundled Low Usage Line Port without Caller ID Capability | | | UEPSR | UEPRT | 1.41 | 2.39 | 2.29 | 1.42 | 1.33 | | | | | | |
| | Subsequent Activity | | | UEPSR | USASC | 0.00 | 0.00 | 0.00 | | | | | | | | |
| **FEATURES** | | | | | | | | | | | | | | | | |
| | All Available Vertical Features | | | UEPSR | UEPVF | 2.56 | 0.00 | 0.00 | | | | | | | | |
| **2-WIRE VOICE GRADE LINE PORT RATES (BUS)** | | | | | | | | | | | | | | | | |
| | Exchange Ports - 2-Wire Analog Line Port without Caller ID - Bus | | | UEPSB | UEPBL | 1.41 | 2.39 | 2.29 | 1.42 | 1.33 | | | | | | |
| | Exchange Ports - 2-Wire VG unbundled Line Port with unbundled port with Caller+E484 ID - Bus. | | | UEPSB | UEPBC | 1.41 | 2.39 | 2.29 | 1.42 | 1.33 | | | | | | |
| | Exchange Ports - 2-Wire Analog Line Port outgoing only - Bus. | | | UEPSB | UEPBO | 1.41 | 2.39 | 2.29 | 1.42 | 1.33 | | | | | | |
| | Exchange Ports - 2-Wire VG unbundled MS extended local dialing parity Port with Caller ID - Bus. | | | UEPSB | UEPAY | 1.41 | 2.39 | 2.29 | 1.42 | 1.33 | | | | | | |
| | Exhange Ports - 2-Wire VG unbundled incoming only port with Caller ID - Bus | | | UEPSB | UEPB1 | 1.41 | 2.39 | 2.29 | 1.42 | 1.33 | | | | | | |
| | Exchange Ports - 2-Wire Voice Mississippi Business Dialing Plan without Caller ID | | | UEPSB | UEPWK | 1.41 | 2.39 | 2.29 | 1.42 | 1.33 | | | | | | |
| | 2-Wire voice unbundled Incoming Only Port without Caller ID Capability | | | UEPSB | UEPBE | 1.41 | 2.39 | 2.29 | 1.42 | 1.33 | | | | | | |
| | Subsequent Activity | | | UEPSB | USASC | 0.00 | 0.00 | 0.00 | | | | | | | | |
| **FEATURES** | | | | | | | | | | | | | | | | |
| | All Available Vertical Features | | | UEPSB | UEPVF | 2.56 | 0.00 | 0.00 | | | | | | | | |

| UNBUNDLED NETWORK ELEMENTS - Mississippi | | | | | | | | | | | | | Attachment: 2 | | Exhibit: A | |
|---|---|---|---|---|---|---|---|---|---|---|---|---|---|---|---|---|
| CATEGORY | RATE ELEMENTS | Interim | Zone | BCS | USOC | RATES ($) | | | | | Svc Order Submitted Elec per LSR | Svc Order Submitted Manually per LSR | Incremental Charge - Manual Svc Order vs. Electronic-1st | Incremental Charge - Manual Svc Order vs. Electronic-Add'l | Incremental Charge - Manual Svc Order vs. Electronic-Disc 1st | Incremental Charge - Manual Svc Order vs. Electronic-Disc Add'l |
| | | | | | | Rec | Nonrecurring | | Nonrecurring Disconnect | | OSS Rates ($) | | | | | |
| | | | | | | | First | Add'l | First | Add'l | SOMEC | SOMAN | SOMAN | SOMAN | SOMAN | SOMAN |
| | EXCHANGE PORT RATES (DID & PBX) | | | | | | | | | | | | | | | |
| | 2-Wire VG Unbundled 2-Way PBX Trunk - Res | | | UEPSE | UEPRD | 1.41 | 31.45 | 14.93 | 14.38 | 0.92 | | | | | | |
| | 2-Wire VG Line Side Unbundled 2-Way PBX Trunk - Bus | | | UEPSP | UEPPC | 1.41 | 31.45 | 14.93 | 14.38 | 0.92 | | | | | | |
| | 2-Wire VG Line Side Unbundled Outward PBX Trunk - Bus | | | UEPSP | UEPPO | 1.41 | 31.45 | 14.93 | 14.38 | 0.92 | | | | | | |
| | 2-Wire VG Line Side Unbundled Incoming PBX Trunk - Bus | | | UEPSP | UEPP1 | 1.41 | 31.45 | 14.93 | 14.38 | 0.92 | | | | | | |
| | 2-Wire Analog Long Distance Terminal PBX Trunk - Bus | | | UEPSP | UEPLD | 1.41 | 31.45 | 14.93 | 14.38 | 0.92 | | | | | | |
| | 2-Wire Voice Unbundled PBX LD Terminal Ports | | | UEPSP | UEPLD | 1.41 | 31.45 | 14.93 | 14.38 | 0.92 | | | | | | |
| | 2-Wire Vice Unbundled 2-Way PBX Usage Port | | | UEPSP | UEPXA | 1.41 | 31.45 | 14.93 | 14.38 | 0.92 | | | | | | |
| | 2-Wire Voice Unbundled PBX Toll Terminal Hotel Ports | | | UEPSP | UEPXB | 1.41 | 31.45 | 14.93 | 14.38 | 0.92 | | | | | | |
| | 2-Wire Voice Unbundled PBX LD DDD Terminals Port | | | UEPSP | UEPXC | 1.41 | 31.45 | 14.93 | 14.38 | 0.92 | | | | | | |
| | 2-Wire Voice Unbundled PBX LD Terminal Switchboard Port | | | UEPSP | UEPXD | 1.41 | 31.45 | 14.93 | 14.38 | 0.92 | | | | | | |
| | 2-Wire Voice Unbundled PBX LD Terminal Switchboard IDD Capable Port | | | UEPSP | UEPXE | 1.41 | 31.45 | 14.93 | 14.38 | 0.92 | | | | | | |
| | 2-Wire Voice Unbundled 2-Way PBX Hotel/Hospital Economy Administrative Calling Port | | | UEPSP | UEPXL | 1.41 | 31.45 | 14.93 | 14.38 | 0.92 | | | | | | |
| | 2-Wire Voice Unbundled 2-Way PBX Hotel/Hospital Economy Room Calling Port | | | UEPSP | UEPXM | 1.41 | 31.45 | 14.93 | 14.38 | 0.92 | | | | | | |
| | 2-Wire Voice Unbundled 1-Way Outgoing PBX Hotel/Hospital Discount Room Calling Port | | | UEPSP | UEPXO | 1.41 | 31.45 | 14.93 | 14.38 | 0.92 | | | | | | |
| | 2-Wire Voice Unbundled 2-Way PBX Mississippi Local Economy Calling Port | | | UEPSP | UEPXQ | 1.41 | 31.45 | 14.93 | 14.38 | 0.92 | | | | | | |
| | 2-Wire Voice Unbundled 2-Way PBX Mississippi Local Optional Calling Port | | | UEPSP | UEPXR | 1.41 | 31.45 | 14.93 | 14.38 | 0.92 | | | | | | |
| | 2-Wire Voice Unbundled PBX Port, Mississippi only | | | UEPSP | UEPA5 | 1.41 | 31.45 | 14.93 | 14.38 | 0.92 | | | | | | |
| | 2-Wire Voice Unbundled 1-Way Outgoing PBX Measured Port | | | UEPSP | UEPXS | 1.41 | 31.45 | 14.93 | 14.38 | 0.92 | | | | | | |
| | Subsequent Activity | | | UEPSP | USASC | 0.00 | 0.00 | 0.00 | | | | | | | | |
| | FEATURES | | | | | | | | | | | | | | | |
| | All Available Vertical Features | | | UEPSP UEPSE | UEPVF | 2.56 | 0.00 | 0.00 | | | | | | | | |
| | EXCHANGE PORT RATES (COIN) | | | | | | | | | | | | | | | |
| | Exchange Ports - Coin Port | | | | | 1.41 | 2.39 | 2.29 | 1.42 | 1.33 | | | | | | |
| | NOTE: Transmission/usage charges associated with POTS circuit switched usage will also apply to circuit switched voice and/or circuit switched data transmission by B-Channels associated with 2-wire ISDN ports. | | | | | | | | | | | | | | | |
| | NOTE: Access to B Channel or D Channel Packet capabilities will be available only through BFR/New Business Request Process. Rates for the packet capabilities will be determined via the Bona Fide Request/New Business Request Process. | | | | | | | | | | | | | | | |
| UNBUNDLED LOCAL EXCHANGE SWITCHING(PORTS) | | | | | | | | | | | | | | | | |
| | EXCHANGE PORT RATES | | | | | | | | | | | | | | | |
| | The DS1 Port rates below for 4-Wire DDITS Trunk Port and 4-Wire ISDN Port in this rate exhibit apply to the embedded base in place as of 10/2/03 until 4/1/04. After 4/1/04 these rates shall revert to tariff rates or a separate agreement. | | | | | | | | | | | | | | | |
| | Requests for 4-Wire DDITS Trunk Ports with 4-Wire ISDN DS1 Ports after the effective date of this amendment shall be provided pursuant to a separate agreement or tariff at BellSouth's discretion. | | | | | | | | | | | | | | | |
| | Exchange Ports - 2-Wire DID Port | | | UEPEX | UEPP2 | 8.25 | 120.00 | 18.85 | 61.77 | 3.88 | | | | | | |
| | Exchange Ports - DDITS Port - 4-Wire DS1 Port with DID capability (E:4/1/2004) | | | UEPDD | UEPDD | 58.41 | 203.19 | 96.25 | 74.86 | 2.54 | | | | | | |
| | Exchange Ports - 2-Wire ISDN Port (See Notes below.) | | | UEPTX, UEPSX | U1PMA | 13.69 | 73.19 | 53.30 | 47.90 | 10.76 | | | | | | |
| | All Features Offered | | | UEPTX, UEPSX | UEPVF | 2.56 | 0.00 | 0.00 | | | | | | | | |
| | Exchange Ports - 2-Wire ISDN Port -- Channel Profiles | | | UEPTX, UEPSX | U1UMA | 0.00 | 0.00 | 0.00 | | | | | | | | |
| | NOTE: Transmission/usage charges associated with POTS circuit switched usage will also apply to circuit switched voice and/or circuit switched data transmission by B-Channels associated with 2-wire ISDN ports. | | | | | | | | | | | | | | | |
| | NOTE: Access to B Channel or D Channel Packet capabilities will be available only through BFR/New Business Request Process. Rates for the packet capabilities will be determined via the Bona Fide Request/New Business Request Process. | | | | | | | | | | | | | | | |
| | EXCHANGE PORT RATES (continued) | | | | | | | | | | | | | | | |
| | Exchange Ports - 4-Wire ISDN DS1 Port with Detailed E911 Locator Capability (E:4/1/2004) | | | UEPEX | UEPEX | 84.63 | 205.00 | 102.14 | 81.65 | 20.69 | | | | | | |
| | Exchange Ports - 4-Wire ISDN DS1 Port (E:4/1/2004) | | | UEPDX | UEPDX | 84.63 | 205.00 | 102.14 | 81.65 | 20.69 | | | | | | |
| | Physical Collocation - DS1 Cross-Connects | | | UEPEX UEPDX | PE1P1 | 1.14 | 22.16 | 16.02 | 6.60 | 5.97 | | | | | | |
| | Virtual Collocation - Special Access & UNE, cross-connect per DS1 | | | UEPEX UEPDX | CNC1X | 1.14 | 22.16 | 16.02 | 6.60 | 5.97 | | | | | | |
| | Detailed E911 with Locator Capability (required with UEPEX port) | | | | | | | | | | | | | | | |
| | Unbundled Exchange Ports, 4-Wire ISDN DS1 Port - E911 Locator Capability - Initial Profile Establishment per CLEC per State | | | UEPEX | UEP1A | 0.00 | 1,814.00 | | 156.15 | | | | | | | |
| | Unbundled Exchange Ports, 4-Wire ISDN DS1 Port - E911 Locator Capability - Subsequent Profile Changes, Additions, Deletions | | | UEPEX | UEP1B | 0.00 | 176.15 | | | | | | | | | |
| | New or Additional PRI Telephone Numbers | | | | | | | | | | | | | | | |

| UNBUNDLED NETWORK ELEMENTS - Mississippi | | | | | | | | | | | | | Attachment: 2 | | Exhibit: A | |
|---|---|---|---|---|---|---|---|---|---|---|---|---|---|---|---|---|
| CATEGORY | RATE ELEMENTS | Interim | Zone | BCS | USOC | RATES ($) | | | | | Svc Order Submitted Elec per LSR | Svc Order Submitted Manually per LSR | Incremental Charge - Manual Svc Order vs. Electronic-1st | Incremental Charge - Manual Svc Order vs. Electronic-Add'l | Incremental Charge - Manual Svc Order vs. Electronic-Disc 1st | Incremental Charge - Manual Svc Order vs. Electronic-Disc Add'l |
| | | | | | | Rec | Nonrecurring | | Nonrecurring Disconnect | | OSS Rates ($) | | | | | |
| | | | | | | | First | Add'l | First | Add'l | SOMEC | SOMAN | SOMAN | SOMAN | SOMAN | SOMAN |
| | Unbundled Exchange Ports, 4-Wire ISDN DS1 Port - E911 Locator Capability 2-way Telephone Numbers, per number in E911 profile [New or Additional] | | | UEPEX | UEP1C | 0.0701 | 0.49 | | | | | | | | | |
| | Unbundled Exchange Ports, 4-Wire ISDN DS1 Port - E911 Locator Capability - Outdial Telephone Numbers, per number in E911 profile [New or Additional] | | | UEPEX | UEP1D | 0.0701 | 11.58 | 11.58 | | | | | | | | |
| | Unbundled Exchange Ports, 4-Wire ISDN DS1 Port - Inward Telephone Numbers - Inward Data Only Option [New or Additional] | | | UEPDX | UEP1E | 0.00 | 0.49 | | | | | | | | | |
| | Exchange Ports - 4-Wire ISDN DS1 Port - Subsequent [New] Inward Tel Numbers [Customer Testing Purposes] | | | UEPEX | PR7ZT | 0.00 | 23.15 | 23.15 | | | | | | | | |
| **LOCAL NUMBER PORTABILITY** | | | | | | | | | | | | | | | | |
| | Local Number Portability (1 per port) | | | UEPEX UEPDX | LNPCN | 1.75 | | | | | | | | | | |
| **INTERFACE (Provsioning Only)** | | | | | | | | | | | | | | | | |
| | Voice/Data | | | UEPEX | PR71V | 0.00 | 0.00 | 0.00 | | | | | | | | |
| | Digital Data | | | UEPEX | PR71D | 0.00 | 0.00 | 0.00 | | | | | | | | |
| | Inward Data | | | UEPDX | PR71E | 0.00 | 0.00 | 0.00 | | | | | | | | |
| **New or Additional Channel** | | | | | | | | | | | | | | | | |
| | New or Additional - Voice/Data "B" Channel | | | UEPEX | PR7BV | 0.00 | 14.61 | | | | | | | | | |
| | New or Additional - Digital Data "B" Channel | | | UEPEX | PR7BF | 0.00 | 14.61 | | | | | | | | | |
| | New or Additional Inward Data "B" Channel | | | UEPDX | PR7BD | 0.00 | 14.61 | | | | | | | | | |
| | New or Additional Useage Sensitive Voice Data "B" Channel | | | UEPEX | PR7BS | 0.00 | 14.61 | | | | | | | | | |
| | New or Additional Useage Sensitive Digital Data "B" Channel | | | UEPEX | PR7BU | 0.00 | 14.61 | | | | | | | | | |
| | New or Additional PRI "D" Channel | | | UEPEX | PR7EX | 0.00 | 14.61 | | | | | | | | | |
| **CALL TYPES** | | | | | | | | | | | | | | | | |
| | Inward | | | UEPEX UEPDX | PR7C1 | 0.00 | 0.00 | 0.00 | | | | | | | | |
| | Outward | | | UEPEX | PR7CO | 0.00 | 0.00 | 0.00 | | | | | | | | |
| | Two-way | | | UEPEX | PR7CC | 0.00 | 0.00 | 0.00 | | | | | | | | |
| **UNBUNDLED PORT with REMOTE CALL FORWARDING CAPABILITY** | | | | | | | | | | | | | | | | |
| **UNBUNDLED REMOTE CALL FORWARDING SERVICE - RESIDENCE** | | | | | | | | | | | | | | | | |
| | Unbundled Remote Call Forwarding Service, Area Calling, Res | | | UEPVR | UERAC | 1.41 | 2.39 | 2.29 | 1.42 | 1.33 | | | | | | |
| | Unbundled Remote Call Forwarding Service, Local Calling - Res | | | UEPVR | UERLC | 1.41 | 2.39 | 2.29 | 1.42 | 1.33 | | | | | | |
| | Unbundled Remote Call Forwarding Service, InterLATA - Res | | | UEPVR | UERTE | 1.41 | 2.39 | 2.29 | 1.42 | 1.33 | | | | | | |
| | Unbundled Remote Call Forwarding Service, IntraLATA - Res | | | UEPVR | UERTR | 1.41 | 2.39 | 2.29 | 1.42 | 1.33 | | | | | | |
| **Non-Recurring** | | | | | | | | | | | | | | | | |
| | Unbundled Remote Call Forwarding Service - Conversion - Switch-as-is | | | UEPVR | USAC2 | | 0.0988 | 0.0988 | | | | | | | | |
| | Unbundled Remote Call Forwarding Service - Conversion with allowed change (PIC and LPIC) | | | UEPVR | USACC | | 0.0988 | 0.0988 | | | | | | | | |
| **UNBUNDLED REMOTE CALL FORWARDING - Bus** | | | | | | | | | | | | | | | | |
| | Unbundled Remote Call Forwarding Service, Area Calling - Bus | | | UEPVB | UERAC | 1.41 | 2.39 | 2.29 | 1.42 | 1.33 | | | | | | |
| | Unbundled Remote Call Forwarding Service, Local Calling - Bus | | | UEPVB | UERLC | 1.41 | 2.39 | 2.29 | 1.42 | 1.33 | | | | | | |
| | Unbundled Remote Call Forwarding Service, InterLATA - Bus | | | UEPVB | UERTE | 1.41 | 2.39 | 2.29 | 1.42 | 1.33 | | | | | | |
| | Unbundled Remote Call Forwarding Service, IntraLATA - Bus | | | UEPVB | UERTR | 1.41 | 2.39 | 2.29 | 1.42 | 1.33 | | | | | | |
| | Unbundled Remote Call Forwarding Service Expanded and Exception Local Calling | | | UEPVB | UERVJ | 1.41 | 2.39 | 2.29 | 1.42 | 1.33 | | | | | | |
| **Non-Recurring** | | | | | | | | | | | | | | | | |
| | Unbundled Remote Call Forwarding Service - Conversion - Switch-as-is | | | UEPVB | USAC2 | | 0.0988 | 0.0988 | | | | | | | | |
| | Unbundled Remote Call Forwarding Service - Conversion with allowed change (PIC and LPIC) | | | UEPVB | USACC | | 0.0988 | 0.0988 | | | | | | | | |
| **UNBUNDLED LOCAL SWITCHING, PORT USAGE** | | | | | | | | | | | | | | | | |
| **End Office Switching (Port Usage)** | | | | | | | | | | | | | | | | |
| | End Office Switching Function, Per MOU | | | | | 0.0010269 | | | | | | | | | | |
| | End Office Trunk Port - Shared, Per MOU | | | | | 0.000161 | | | | | | | | | | |
| **Tandem Switching (Port Usage) (Local or Access Tandem)** | | | | | | | | | | | | | | | | |

| UNBUNDLED NETWORK ELEMENTS - Mississippi | | | | | | | | | | | | | | Attachment: 2 | | Exhibit: A | |
|---|---|---|---|---|---|---|---|---|---|---|---|---|---|---|---|---|---|
| CATEGORY | RATE ELEMENTS | Interim | Zone | BCS | USOC | RATES ($) | | | | | Svc Order Submitted Elec per LSR | Svc Order Submitted Manually per LSR | Incremental Charge - Manual Svc Order vs. Electronic-1st | Incremental Charge - Manual Svc Order vs. Electronic-Add'l | Incremental Charge - Manual Svc Order vs. Electronic-Disc 1st | Incremental Charge - Manual Svc Order vs. Electronic-Disc Add'l |
| | | | | | | Rec | Nonrecurring | | Nonrecurring Disconnect | | OSS Rates ($) | | | | | |
| | | | | | | | First | Add'l | First | Add'l | SOMEC | SOMAN | SOMAN | SOMAN | SOMAN | SOMAN |
| | Tandem Switching Function Per MOU | | | | | 0.0001723 | | | | | | | | | | |
| | Tandem Trunk Port - Shared, Per MOU | | | | | 0.0001828 | | | | | | | | | | |
| | Tandem Switching Function Per MOU (Melded) | | | | | 0.000063441 | | | | | | | | | | |
| | Tandem Trunk Port - Shared, Per MOU (Melded) | | | | | 0.000067307 | | | | | | | | | | |
| | Melded Factor: 36.82% of the Tandem Rate | | | | | | | | | | | | | | | |
| **Common Transport** | | | | | | | | | | | | | | | | |
| | Common Transport - Per Mile, Per MOU | | | | | 0.0000026 | | | | | | | | | | |
| | Common Transport - Facilities Termination Per MOU | | | | | 0.0004541 | | | | | | | | | | |
| **UNBUNDLED PORT/LOOP COMBINATIONS - COST BASED RATES** | | | | | | | | | | | | | | | | |
| **Cost Based Rates are applied where BellSouth is required by FCC and/or State Commission rule to provide Unbundled Local Switching or Switch Ports.** | | | | | | | | | | | | | | | | |
| **Features shall apply to the Unbundled Port/Loop Combination - Cost Based Rate section in the same manner as they are applied to the Stand-Alone Unbundled Port section of this Rate Exhibit.** | | | | | | | | | | | | | | | | |
| **End Office and Tandem Switching Usage and Common Transport Usage rates in the Port section of this rate exhibit shall apply to all combinations of loop/port network elements except for UNE Coin Port/Loop Combinations.** | | | | | | | | | | | | | | | | |
| **The first and additional Port nonrecurring charges apply to Not Currently Combined Combos. For Currently Combined Combos the nonrecurring charges shall be those identified in the Nonrecurring - Currently Combined sections.** | | | | | | | | | | | | | | | | |
| **2-WIRE VOICE GRADE LOOP WITH 2-WIRE LINE PORT (RES)** | | | | | | | | | | | | | | | | |
| **UNE Port/Loop Combination Rates** | | | | | | | | | | | | | | | | |
| | 2-Wire VG Loop/Port Combo - Zone 1 | | 1 | | | 12.22 | | | | | | | | | | |
| | 2-Wire VG Loop/Port Combo - Zone 2 | | 2 | | | 17.13 | | | | | | | | | | |
| | 2-Wire VG Loop/Port Combo - Zone 3 | | 3 | | | 26.26 | | | | | | | | | | |
| | 2-Wire VG Loop/Port Combo - Zone 4 | | 4 | | | 44.91 | | | | | | | | | | |
| **UNE Loop Rates** | | | | | | | | | | | | | | | | |
| | 2-Wire Voice Grade Loop (SL1) - Zone 1 | | 1 | UEPRX | UEPLX | 10.98 | | | | | | | | | | |
| | 2-Wire Voice Grade Loop (SL1) - Zone 2 | | 2 | UEPRX | UEPLX | 15.91 | | | | | | | | | | |
| | 2-Wire Voice Grade Loop (SL1) - Zone 3 | | 3 | UEPRX | UEPLX | 25.04 | | | | | | | | | | |
| | 2-Wire Voice Grade Loop (SL1) - Zone 4 | | 4 | UEPRX | UEPLX | 43.68 | | | | | | | | | | |
| **2-Wire Voice Grade Line Port Rates (Res)** | | | | | | | | | | | | | | | | |
| | 2-Wire voice unbundled port - residence | | | UEPRX | UEPRL | 1.23 | 40.31 | 19.84 | 24.90 | 6.58 | | | | | | |
| | 2-Wire voice unbundled port with Caller ID - res | | | UEPRX | UEPRC | 1.23 | 40.31 | 19.84 | 24.90 | 6.58 | | | | | | |
| | 2-Wire voice unbundled port outgoing only - res | | | UEPRX | UEPRO | 1.23 | 40.31 | 19.84 | 24.90 | 6.58 | | | | | | |
| | 2-Wire voice Grade unbundled Mississippi extended local dialing parity port with Caller ID - res | | | UEPRX | UEPAT | 1.23 | 40.31 | 19.84 | 24.90 | 6.58 | | | | | | |
| | 2-Wire voice unbundles res, low usage line port with Caller ID (LUM) | | | UEPRX | UEPAP | 1.23 | 40.31 | 19.84 | 24.90 | 6.58 | | | | | | |
| | 2-Wire Voice Unbundled Mississippi Residence Dialing Plan without Caller ID | | | UEPRX | UEPWJ | 1.23 | 40.31 | 19.84 | 24.90 | 6.58 | | | | | | |
| | 2-Wire voice unbundled Low Usage Line Port without Caller ID Capability | | | UEPRX | UEPRT | 1.23 | 40.31 | 19.84 | 24.90 | 6.58 | | | | | | |
| **FEATURES** | | | | | | | | | | | | | | | | |
| | All Features Offered | | | UEPRX | UEPVF | 2.56 | 0.00 | 0.00 | | | | | | | | |
| **LOCAL NUMBER PORTABILITY** | | | | | | | | | | | | | | | | |
| | Local Number Portability (1 per port) | | | UEPRX | LNPCX | 0.35 | | | | | | | | | | |
| **NONRECURRING CHARGES (NRCs) - CURRENTLY COMBINED** | | | | | | | | | | | | | | | | |
| | 2-Wire Voice Grade Loop / Line Port Combination - Conversion - Switch-as-Is | | | UEPRX | USAC2 | | 0.0988 | 0.0988 | | | | | | | | |
| | 2-Wire Voice Grade Loop / Line Port Combination - Conversion - Switch with change | | | UEPRX | USACC | | 0.0988 | 0.0988 | | | | | | | | |
| | 2-Wire Voice Grade Loop / Line Port Combination - Conversion - Subsequent Database Update | | | | | | 0.00 | 0.00 | | | | | | | | |
| **ADDITIONAL NRCs** | | | | | | | | | | | | | | | | |
| | 2-Wire Voice Grade Loop/Line Port Combination - Subsequent Activity | | | UEPRX | USAS2 | 0.00 | 0.00 | 0.00 | | | | | | | | |
| | Unbundled Miscellaneous Rate Element, Tag Loop at End User Premise | | | UEPRX | URETL | | 8.33 | 0.83 | | | | | | | | |
| **OFF/ON PREMISES EXTENSION CHANNELS** | | | | | | | | | | | | | | | | |
| | 2 Wire Analog Voice Grade Extension Loop – Non-Design | | 1 | UEPRX | UEAEN | 12.03 | 37.92 | 17.55 | 23.48 | 5.25 | | | | | | |
| | 2 Wire Analog Voice Grade Extension Loop – Non-Design | | 2 | UEPRX | UEAEN | 16.87 | 37.92 | 17.55 | 23.48 | 5.25 | | | | | | |
| | 2 Wire Analog Voice Grade Extension Loop – Non-Design | | 3 | UEPRX | UEAEN | 25.68 | 37.92 | 17.55 | 23.48 | 5.25 | | | | | | |
| | 2 Wire Analog Voice Grade Extension Loop – Non-Design | | 4 | UEPRX | UEAEN | 43.85 | 37.92 | 17.55 | 23.48 | 5.25 | | | | | | |
| | 2 Wire Analog Voice Grade Extension Loop – Design | | 1 | UEPRX | UEAED | 13.89 | 105.96 | 68.28 | 52.82 | 10.37 | | | | | | |
| | 2 Wire Analog Voice Grade Extension Loop – Design | | 2 | UEPRX | UEAED | 18.75 | 105.96 | 68.28 | 52.82 | 10.37 | | | | | | |

| UNBUNDLED NETWORK ELEMENTS - Mississippi | | | | | | | | | | | | | | Attachment: 2 | | Exhibit: A | |
|---|---|---|---|---|---|---|---|---|---|---|---|---|---|---|---|---|---|
| CATEGORY | RATE ELEMENTS | Interim | Zone | BCS | USOC | RATES ($) | | | | | Svc Order Submitted Elec per LSR | Svc Order Submitted Manually per LSR | Incremental Charge - Manual Svc Order vs. Electronic-1st | Incremental Charge - Manual Svc Order vs. Electronic-Add'l | Incremental Charge - Manual Svc Order vs. Electronic-Disc 1st | Incremental Charge - Manual Svc Order vs. Electronic-Disc Add'l |
| | | | | | | Rec | Nonrecurring | | Nonrecurring Disconnect | | | | OSS Rates ($) | | | |
| | | | | | | | First | Add'l | First | Add'l | SOMEC | SOMAN | SOMAN | SOMAN | SOMAN | SOMAN |
| | 2 Wire Analog Voice Grade Extension Loop – Design | | 3 | UEPRX | UEAED | 27.55 | 105.96 | 68.28 | 52.82 | 10.37 | | | | | | |
| | 2 Wire Analog Voice Grade Extension Loop – Design | | 4 | UEPRX | UEAED | 45.72 | 105.96 | 68.28 | 52.82 | 10.37 | | | | | | |
| INTEROFFICE TRANSPORT | | | | | | | | | | | | | | | | |
| | Interoffice Transport - Dedicated - 2 Wire Voice Grade - Facility Termination | | | UEPRX | U1TV2 | 20.32 | 40.77 | 27.57 | 17.26 | 7.11 | | | | | | |
| | Interoffice Transport - Dedicated - 2 Wire Voice Grade - Per Mile or Fraction Mile | | | UEPRX | U1TVM | 0.0088 | 0.00 | 0.00 | | | | | | | | |
| 2-WIRE VOICE GRADE LOOP WITH 2-WIRE LINE PORT (BUS) | | | | | | | | | | | | | | | | |
| UNE Port/Loop Combination Rates | | | | | | | | | | | | | | | | |
| | 2-Wire VG Loop/Port Combo - Zone 1 | | 1 | | | 12.22 | | | | | | | | | | |
| | 2-Wire VG Loop/Port Combo - Zone 2 | | 2 | | | 17.13 | | | | | | | | | | |
| | 2-Wire VG Loop/Port Combo - Zone 3 | | 3 | | | 26.26 | | | | | | | | | | |
| UNE Loop Rates | | | | | | | | | | | | | | | | |
| | 2-Wire Voice Grade Loop (SL1) - Zone 1 | | 1 | UEPBX | UEPLX | 10.98 | | | | | | | | | | |
| | 2-Wire Voice Grade Loop (SL1) - Zone 2 | | 2 | UEPBX | UEPLX | 15.91 | | | | | | | | | | |
| | 2-Wire Voice Grade Loop (SL1) - Zone 3 | | 3 | UEPBX | UEPLX | 25.04 | | | | | | | | | | |
| | 2-Wire Voice Grade Loop (SL1) - Zone 4 | | 4 | UEPBX | UEPLX | 43.68 | | | | | | | | | | |
| 2-Wire Voice Grade Line Port (Bus) | | | | | | | | | | | | | | | | |
| | 2-Wire voice unbundled port without Caller ID - bus | | | UEPBX | UEPBL | 1.23 | 40.31 | 19.84 | 24.90 | 6.58 | | | | | | |
| | 2-Wire voice unbundled port with Caller + E484 ID - bus | | | UEPBX | UEPBC | 1.23 | 40.31 | 19.84 | 24.90 | 6.58 | | | | | | |
| | 2-Wire voice unbundled port outgoing only - bus | | | UEPBX | UEPBO | 1.23 | 40.31 | 19.84 | 24.90 | 6.58 | | | | | | |
| | 2-Wire voice Grade unbundled Mississippi extended local dialing parity port with Caller ID - bus | | | UEPBX | UEPAY | 1.23 | 40.31 | 19.84 | 24.90 | 6.58 | | | | | | |
| | 2-Wire voice unbundled incoming only port with Caller ID - Bus | | | UEPBX | UEPB1 | 1.23 | 40.31 | 19.84 | 24.90 | 6.58 | | | | | | |
| | 2-Wire Voice Unbundled Mississippi Business Dialing Plan without Caller ID | | | UEPBX | UEPWK | 1.23 | 40.31 | 19.84 | 24.90 | 6.58 | | | | | | |
| | 2-Wire voice unbundled Incoming Only Port without Caller ID Capability | | | UEPBX | UEPBE | 1.23 | 40.31 | 19.84 | 24.90 | 6.58 | | | | | | |
| LOCAL NUMBER PORTABILITY | | | | | | | | | | | | | | | | |
| | Local Number Portability (1 per port) | | | UEPBX | LNPCX | 0.35 | | | | | | | | | | |
| FEATURES | | | | | | | | | | | | | | | | |
| | All Features Offered | | | UEPBX | UEPVF | 2.56 | 0.00 | 0.00 | | | | | | | | |
| NONRECURRING CHARGES (NRCs) - CURRENTLY COMBINED | | | | | | | | | | | | | | | | |
| | 2-Wire Voice Grade Loop / Line Port Combination - Conversion - Switch-as-is | | | UEPBX | USAC2 | | 0.0988 | 0.0988 | | | | | | | | |
| | 2-Wire Voice Grade Loop / Line Port Combination - Conversion - Switch with change | | | UEPBX | USACC | | 0.0988 | 0.0988 | | | | | | | | |
| | 2-Wire Voice Grade Loop / Line Port Combination - Conversion - Subsequent Database Update | | | | | | 0.00 | 0.00 | | | | | | | | |
| ADDITIONAL NRCs | | | | | | | | | | | | | | | | |
| | 2-Wire Voice Grade Loop/Line Port Combination - Subsequent Activity | | | UEPBX | USAS2 | | 0.00 | 0.00 | | | | | | | | |
| | Unbundled Miscellaneous Rate Element, Tag Loop at End User Premise | | | UEPBX | URETL | | 8.33 | 0.83 | | | | | | | | |
| OFF/ON PREMISES EXTENSION CHANNELS | | | | | | | | | | | | | | | | |
| | 2 Wire Analog Voice Grade Extension Loop – Non-Design | | 1 | UEPBX | UEAEN | 12.03 | 37.92 | 17.55 | 23.48 | 5.25 | | | | | | |
| | 2 Wire Analog Voice Grade Extension Loop – Non-Design | | 2 | UEPBX | UEAEN | 16.87 | 37.92 | 17.55 | 23.48 | 5.25 | | | | | | |
| | 2 Wire Analog Voice Grade Extension Loop – Non-Design | | 3 | UEPBX | UEAEN | 25.68 | 37.92 | 17.55 | 23.48 | 5.25 | | | | | | |
| | 2 Wire Analog Voice Grade Extension Loop – Non-Design | | 4 | UEPBX | UEAEN | 43.85 | 37.92 | 17.55 | 23.48 | 5.25 | | | | | | |
| | 2 Wire Analog Voice Grade Extension Loop – Design | | 1 | UEPBX | UEAED | 13.89 | 105.96 | 68.28 | 52.82 | 10.37 | | | | | | |
| | 2 Wire Analog Voice Grade Extension Loop – Design | | 2 | UEPBX | UEAED | 18.75 | 105.96 | 68.28 | 52.82 | 10.37 | | | | | | |
| | 2 Wire Analog Voice Grade Extension Loop – Design | | 3 | UEPBX | UEAED | 27.55 | 105.96 | 68.28 | 52.82 | 10.37 | | | | | | |
| | 2 Wire Analog Voice Grade Extension Loop – Design | | 4 | UEPBX | UEAED | 45.72 | 105.96 | 68.28 | 52.82 | 10.37 | | | | | | |
| INTEROFFICE TRANSPORT | | | | | | | | | | | | | | | | |
| | Interoffice Transport - Dedicated - 2 Wire Voice Grade - Facility Termination | | | UEPBX | U1TV2 | 20.32 | 40.77 | 27.57 | 17.26 | 7.11 | | | | | | |
| | Interoffice Transport - Dedicated - 2 Wire Voice Grade - Per Mile or Fraction Mile | | | UEPBX | U1TVM | 0.0088 | 0.00 | 0.00 | | | | | | | | |
| 2-WIRE VOICE GRADE LOOP WITH 2-WIRE LINE PORT (RES - PBX) | | | | | | | | | | | | | | | | |

## UNBUNDLED NETWORK ELEMENTS - Mississippi

| CATEGORY | RATE ELEMENTS | Interim | Zone | BCS | USOC | RATES ($) | | | | | Svc Order Submitted Elec per LSR | Svc Order Submitted Manually per LSR | Attachment: 2 | | Exhibit: A | |
|---|---|---|---|---|---|---|---|---|---|---|---|---|---|---|---|---|
| | | | | | | | | | | | | | Incremental Charge - Manual Svc Order vs. Electronic-1st | Incremental Charge - Manual Svc Order vs. Electronic-Add'l | Incremental Charge - Manual Svc Order vs. Electronic-Disc 1st | Incremental Charge - Manual Svc Order vs. Electronic-Disc Add'l |
| | | | | | | Rec | Nonrecurring | | Nonrecurring Disconnect | | OSS Rates ($) | | | | | |
| | | | | | | | First | Add'l | First | Add'l | SOMEC | SOMAN | SOMAN | SOMAN | SOMAN | SOMAN |
| UNE Port/Loop Combination Rates | | | | | | | | | | | | | | | | |
| | 2-Wire VG Loop/Port Combo - Zone 1 | | 1 | | | 12.22 | | | | | | | | | | |
| | 2-Wire VG Loop/Port Combo - Zone 2 | | 2 | | | 17.13 | | | | | | | | | | |
| | 2-Wire VG Loop/Port Combo - Zone 3 | | 3 | | | 26.26 | | | | | | | | | | |
| | 2-Wire VG Loop/Port Combo - Zone 4 | | 4 | | | 44.91 | | | | | | | | | | |
| UNE Loop Rates | | | | | | | | | | | | | | | | |
| | 2-Wire Voice Grade Loop (SL 1) - Zone 1 | | 1 | UEPRG | UEPLX | 10.98 | | | | | | | | | | |
| | 2-Wire Voice Grade Loop (SL 1) - Zone 2 | | 2 | UEPRG | UEPLX | 15.91 | | | | | | | | | | |
| | 2-Wire Voice Grade Loop (SL 1) - Zone 3 | | 3 | UEPRG | UEPLX | 25.04 | | | | | | | | | | |
| | 2-Wire Voice Grade Loop (SL 1) - Zone 4 | | 4 | UEPRG | UEPLX | 43.68 | | | | | | | | | | |
| 2-Wire Voice Grade Line Port Rates (RES - PBX) | | | | | | | | | | | | | | | | |
| | 2-Wire VG Unbundled Combination 2-Way PBX Trunk Port - Res | | | UEPRG | UEPRD | 1.23 | 69.37 | 32.48 | 37.86 | 6.17 | | | | | | |
| LOCAL NUMBER PORTABILITY | | | | | | | | | | | | | | | | |
| | Local Number Portability (1 per port) | | | UEPRG | LNPCP | 3.15 | 0.00 | 0.00 | | | | | | | | |
| FEATURES | | | | | | | | | | | | | | | | |
| | All Features Offered | | | UEPRG | UEPVF | 2.56 | 0.00 | 0.00 | | | | | | | | |
| NONRECURRING CHARGES (NRCs) - CURRENTLY COMBINED | | | | | | | | | | | | | | | | |
| | 2-Wire Voice Grade Loop/ Line Port Combination (PBX) - Conversion - Switch-As-Is | | | UEPRG | USAC2 | | 7.96 | 1.91 | | | | | | | | |
| | 2-Wire Voice Grade Loop/ Line Port Combination (PBX) - Conversion - Switch with Change | | | UEPRG | USACC | | 7.96 | 1.91 | | | | | | | | |
| | 2-Wire Voice Grade Loop / Line Port Combination - Conversion - Subsequent Database Update | | | | | | 0.00 | 0.00 | | | | | | | | |
| ADDITIONAL NRCs | | | | | | | | | | | | | | | | |
| | 2-Wire Voice Grade Loop/ Line Port Combination (PBX) - Subsequent Activity | | | UEPRG | USAS2 | 0.00 | 0.00 | 0.00 | | | | | | | | |
| | PBX Subsequent Activity - Change/Rearrange Multiline Hunt Group | | | | | | 7.36 | 7.36 | | | | | | | | |
| | Unbundled Miscellaneous Rate Element, Tag Loop at End User Premise | | | UEPRG | URETL | | 8.33 | 0.83 | | | | | | | | |
| OFF/ON PREMISES EXTENSION CHANNELS | | | | | | | | | | | | | | | | |
| | Local Channel Voice grade, per termination | | 1 | UEPRG | P2JHX | 13.89 | 105.96 | 68.28 | 52.82 | 10.37 | | | | | | |
| | Local Channel Voice grade, per termination | | 2 | UEPRG | P2JHX | 18.75 | 105.96 | 68.28 | 52.82 | 10.37 | | | | | | |
| | Local Channel Voice grade, per termination | | 3 | UEPRG | P2JHX | 27.55 | 105.96 | 68.28 | 52.82 | 10.37 | | | | | | |
| | Local Channel Voice grade, per termination | | 4 | UEPRG | P2JHX | 45.72 | 105.96 | 68.28 | 52.82 | 10.37 | | | | | | |
| INTEROFFICE TRANSPORT | | | | | | | | | | | | | | | | |
| | Interoffice Transport - Dedicated - 2 Wire Voice Grade - Facility Termination | | | UEPRG | U1TV2 | 20.32 | 40.77 | 27.57 | 17.26 | 7.11 | | | | | | |
| | Interoffice Transport - Dedicated - 2 Wire Voice Grade - Per Mile or Fraction Mile | | | UEPRG | U1TVM | 0.0088 | 0.00 | 0.00 | | | | | | | | |
| 2-WIRE VOICE GRADE LOOP WITH 2-WIRE LINE PORT (BUS - PBX) | | | | | | | | | | | | | | | | |
| UNE Port/Loop Combination Rates | | | | | | | | | | | | | | | | |
| | 2-Wire VG Loop/Port Combo - Zone 1 | | 1 | | | 12.22 | | | | | | | | | | |
| | 2-Wire VG Loop/Port Combo - Zone 2 | | 2 | | | 17.13 | | | | | | | | | | |
| | 2-Wire VG Loop/Port Combo - Zone 3 | | 3 | | | 26.26 | | | | | | | | | | |
| | 2-Wire VG Loop/Port Combo - Zone 4 | | 4 | | | 44.91 | | | | | | | | | | |
| UNE Loop Rates | | | | | | | | | | | | | | | | |
| | 2-Wire Voice Grade Loop (SL 1) - Zone 1 | | 1 | UEPPX | UEPLX | 10.98 | | | | | | | | | | |
| | 2-Wire Voice Grade Loop (SL 1) - Zone 2 | | 2 | UEPPX | UEPLX | 15.91 | | | | | | | | | | |
| | 2-Wire Voice Grade Loop (SL 1) - Zone 3 | | 3 | UEPPX | UEPLX | 25.04 | | | | | | | | | | |
| | 2-Wire Voice Grade Loop (SL 1) - Zone 4 | | 4 | UEPPX | UEPLX | 43.68 | | | | | | | | | | |
| 2-Wire Voice Grade Line Port Rates (BUS - PBX) | | | | | | | | | | | | | | | | |
| | Line Side Unbundled Combination 2-Way PBX Trunk Port - Bus | | | UEPPX | UEPPC | 1.23 | 69.37 | 32.48 | 37.86 | 6.17 | | | | | | |
| | Line Side Unbundled Outward PBX Trunk Port - Bus | | | UEPPX | UEPPO | 1.23 | 69.37 | 32.48 | 37.86 | 6.17 | | | | | | |
| | Line Side Unbundled Incoming PBX Trunk Port - Bus | | | UEPPX | UEPP1 | 1.23 | 69.37 | 32.48 | 37.86 | 6.17 | | | | | | |
| | 2-Wire Voice Unbundled PBX LD Terminal Ports | | | UEPPX | UEPLD | 1.23 | 69.37 | 32.48 | 37.86 | 6.17 | | | | | | |
| | 2-Wire Voice Unbundled 2-Way Combination PBX Usage Port | | | UEPPX | UEPXA | 1.23 | 69.37 | 32.48 | 37.86 | 6.17 | | | | | | |

| UNBUNDLED NETWORK ELEMENTS - Mississippi | | | | | | | | | | | | | | Attachment: 2 | | Exhibit: A | |
|---|---|---|---|---|---|---|---|---|---|---|---|---|---|---|---|---|---|
| CATEGORY | RATE ELEMENTS | Interim | Zone | BCS | USOC | RATES ($) | | | | | Svc Order Submitted Elec per LSR | Svc Order Submitted Manually per LSR | Incremental Charge - Manual Svc Order vs. Electronic-1st | Incremental Charge - Manual Svc Order vs. Electronic-Add'l | Incremental Charge - Manual Svc Order vs. Electronic-Disc 1st | Incremental Charge - Manual Svc Order vs. Electronic-Disc Add'l |
| | | | | | | Rec | Nonrecurring | | Nonrecurring Disconnect | | OSS Rates ($) | | | | | |
| | | | | | | | First | Add'l | First | Add'l | SOMEC | SOMAN | SOMAN | SOMAN | SOMAN | SOMAN |
| | 2-Wire Voice Unbundled PBX Toll Terminal Hotel Ports | | | UEPPX | UEPXB | 1.23 | 69.37 | 32.48 | 37.86 | 6.17 | | | | | | |
| | 2-Wire Voice Unbundled PBX LD DDD Terminals Port | | | UEPPX | UEPXC | 1.23 | 69.37 | 32.48 | 37.86 | 6.17 | | | | | | |
| | 2-Wire Voice Unbundled PBX LD Terminal Switchboard Port | | | UEPPX | UEPXD | 1.23 | 69.37 | 32.48 | 37.86 | 6.17 | | | | | | |
| | 2-Wire Voice Unbundled PBX LD Terminal Switchboard IDD Capable Port | | | UEPPX | UEPXE | 1.23 | 69.37 | 32.48 | 37.86 | 6.17 | | | | | | |
| | 2-Wire Voice Unbundled 2-Way PBX Hotel/Hospital Economy Administrative Calling Port | | | UEPPX | UEPXL | 1.23 | 69.37 | 32.48 | 37.86 | 6.17 | | | | | | |
| | 2-Wire Voice Unbundled 2-Way PBX Hotel/Hospital Economy Room Calling Port | | | UEPPX | UEPXM | 1.23 | 69.37 | 32.48 | 37.86 | 6.17 | | | | | | |
| | 2-Wire Voice Unbundled 1-Way Outgoing PBX Hotel/Hospital Discount Room Calling Port | | | UEPPX | UEPXO | 1.23 | 69.37 | 32.48 | 37.86 | 6.17 | | | | | | |
| | 2-Wire Voice Unbundled 2-Way PBX Mississippi Local Economy Calling Port | | | UEPPX | UEPXQ | 1.23 | 69.37 | 32.48 | 37.86 | 6.17 | | | | | | |
| | 2-Wire Voice Unbundled 2-Way PBX Mississippi Local Optional Calling Port | | | UEPPX | UEPXR | 1.23 | 69.37 | 32.48 | 37.86 | 6.17 | | | | | | |
| | 2-Wire Voice Unbundled 1-Way Outgoing PBX Measured Port | | | UEPPX | UEPXS | 1.23 | 69.37 | 32.48 | 37.86 | 6.17 | | | | | | |
| | Mississippi PBX 2-Way Combo Local Opt 2 Calling Port | | | UEPPX | UEPA5 | 1.23 | 69.37 | 32.48 | 37.86 | 6.17 | | | | | | |
| **LOCAL NUMBER PORTABILITY** | | | | | | | | | | | | | | | | | |
| | Local Number Portability (1 per port) | | | UEPPX | LNPCP | 3.15 | 0.00 | 0.00 | | | | | | | | |
| **FEATURES** | | | | | | | | | | | | | | | | | |
| | All Features Offered | | | UEPPX | UEPVF | 2.56 | 0.00 | 0.00 | | | | | | | | |
| **NONRECURRING CHARGES (NRCs) - CURRENTLY COMBINED** | | | | | | | | | | | | | | | | | |
| | 2-Wire Voice Grade Loop/ Line Port Combination (PBX) - Conversion - Switch-As-Is | | | UEPPX | USAC2 | | 7.96 | 1.91 | | | | | | | | |
| | 2-Wire Voice Grade Loop/ Line Port Combination (PBX) - Conversion - Switch with Change | | | UEPPX | USACC | | 7.96 | 1.91 | | | | | | | | |
| | 2-Wire Voice Grade Loop / Line Port Combination - Conversion - Subsequent Database Update | | | | | | 0.00 | 0.00 | | | | | | | | |
| **ADDITIONAL NRCs** | | | | | | | | | | | | | | | | | |
| | 2-Wire Voice Grade Loop/ Line Port Combination (PBX) - Subsequent Activity | | | UEPPX | USAS2 | 0.00 | 0.00 | 0.00 | | | | | | | | |
| | PBX Subsequent Activity - Change/Rearrange Multiline Hunt Group | | | | | | 7.36 | 7.36 | | | | | | | | |
| | Unbundled Miscellaneous Rate Element, Tag Loop at End User Premise | | | UEPPX | URETL | | 8.33 | 0.83 | | | | | | | | |
| **OFF/ON PREMISES EXTENSION CHANNELS** | | | | | | | | | | | | | | | | | |
| | Local Channel Voice grade, per termination | | 1 | UEPPX | P2JHX | 13.89 | 105.96 | 68.28 | 52.82 | 10.37 | | | | | | |
| | Local Channel Voice grade, per termination | | 2 | UEPPX | P2JHX | 18.75 | 105.96 | 68.28 | 52.82 | 10.37 | | | | | | |
| | Local Channel Voice grade, per termination | | 3 | UEPPX | P2JHX | 27.55 | 105.96 | 68.28 | 52.82 | 10.37 | | | | | | |
| | Local Channel Voice grade, per termination | | 4 | UEPPX | P2JHX | 45.72 | 105.96 | 68.28 | 52.82 | 10.37 | | | | | | |
| **INTEROFFICE TRANSPORT** | | | | | | | | | | | | | | | | | |
| | Interoffice Transport - Dedicated - 2 Wire Voice Grade - Facility Termination | | | UEPPX | U1TV2 | 20.32 | 40.77 | 27.57 | 17.26 | 7.11 | | | | | | |
| | Interoffice Transport - Dedicated - 2 Wire Voice Grade - Per Mile or Fraction Mile | | | UEPPX | U1TVM | 0.0088 | 0.00 | 0.00 | | | | | | | | |
| **2-WIRE VOICE GRADE LOOP WITH 2-WIRE ANALOG LINE COIN PORT** | | | | | | | | | | | | | | | | | |
| **UNE Port/Loop Combination Rates** | | | | | | | | | | | | | | | | | |
| | 2-Wire VG Coin Port/Loop Combo – Zone 1 | | 1 | | | 12.22 | | | | | | | | | | |
| | 2-Wire VG Coin Port/Loop Combo – Zone 2 | | 2 | | | 17.13 | | | | | | | | | | |
| | 2-Wire VG Coin Port/Loop Combo – Zone 3 | | 3 | | | 26.26 | | | | | | | | | | |
| | 2-Wire VG Coin Port/Loop Combo – Zone 4 | | 4 | | | 44.91 | | | | | | | | | | |
| **UNE Loop Rates** | | | | | | | | | | | | | | | | | |
| | 2-Wire Voice Grade Loop (SL1) - Zone 1 | | 1 | UEPCO | UEPLX | 10.98 | | | | | | | | | | |
| | 2-Wire Voice Grade Loop (SL1) - Zone 2 | | 2 | UEPCO | UEPLX | 15.91 | | | | | | | | | | |
| | 2-Wire Voice Grade Loop (SL1) - Zone 3 | | 3 | UEPCO | UEPLX | 25.04 | | | | | | | | | | |
| | 2-Wire Voice Grade Loop (SL1) - Zone 4 | | 4 | UEPCO | UEPLX | 43.68 | | | | | | | | | | |
| **2-Wire Voice Grade Line Ports (COIN)** | | | | | | | | | | | | | | | | | |
| | 2-Wire Coin 2-Way without Operator Screening and without Blocking (AL, KY, LA, MS) | | | UEPCO | UEPRF | 1.23 | 40.31 | 19.84 | 24.90 | 6.58 | | | | | | |

## UNBUNDLED NETWORK ELEMENTS - Mississippi

| CATEGORY | RATE ELEMENTS | Interim | Zone | BCS | USOC | RATES ($) | | | | | Svc Order Submitted Elec per LSR | Svc Order Submitted Manually per LSR | Attachment: 2 | | Exhibit: A | |
|---|---|---|---|---|---|---|---|---|---|---|---|---|---|---|---|---|
| | | | | | | | | | | | | | Incremental Charge - Manual Svc Order vs. Electronic-1st | Incremental Charge - Manual Svc Order vs. Electronic-Add'l | Incremental Charge - Manual Svc Order vs. Electronic-Disc 1st | Incremental Charge - Manual Svc Order vs. Electronic-Disc Add'l |
| | | | | | | Rec | Nonrecurring | | Nonrecurring Disconnect | | OSS Rates ($) | | | | | |
| | | | | | | | First | Add'l | First | Add'l | SOMEC | SOMAN | SOMAN | SOMAN | SOMAN | SOMAN |
| | 2-Wire Coin 2-Way without Operator Screening and without Blocking; with Dialing Parity (Note 3) (MS) | | | UEPCO | UEPMC | 1.23 | 40.31 | 19.84 | 24.90 | 6.58 | | | | | | |
| | 2-Wire Coin 2-Way with Operator Screening and Blocking: 011, 900/976, 1+DDD (AL, KY, LA, MS) | | | UEPCO | UEPRA | 1.23 | 40.31 | 19.84 | 24.90 | 6.58 | | | | | | |
| | 2-Wire Coin 2-W with Operator Screening and Blocking: 011, 900/976, 1+DDD; with Dialing Parity (MS) | | | UEPCO | UEPMA | 1.23 | 40.31 | 19.84 | 24.90 | 6.58 | | | | | | |
| | 2-Wire Coin 2-Way with Operator Screening and 011 Blocking (AL, LA, MS) | | | UEPCO | UEPRB | 1.23 | 40.31 | 19.84 | 24.90 | 6.58 | | | | | | |
| | 2-Wire Coin 2-Way with Operator Screening and 011 Blocking; with Dialing Parity (MS) | | | UEPCO | UEPMB | 1.23 | 40.31 | 19.84 | 24.90 | 6.58 | | | | | | |
| | 2-Wire Coin 2-Way with Operator Screening & Blocking: 900/976, 1+DDD, 011+, & Local (AL, KY, LA, MS) | | | UEPCO | UEPCD | 1.23 | 40.31 | 19.84 | 24.90 | 6.58 | | | | | | |
| | 2-Wire Coin 2-W Operator Screening: 900 Block: 900/976, 1+DDD, 011+, Local; with Dialing Parity (MS) | | | UEPCO | UEPCJ | 1.23 | 40.31 | 19.84 | 24.90 | 6.58 | | | | | | |
| | 2-Wire Coin Outward without Blocking and without Operator Screening (KY, LA, MS) | | | UEPCO | UEPRN | 1.23 | 40.31 | 19.84 | 24.90 | 6.58 | | | | | | |
| | 2-Wire Coin Outward without Blocking and without Operator Screening; With Dalling Parity (MS) | | | UEPCO | UEPME | 1.23 | 40.31 | 19.84 | 24.90 | 6.58 | | | | | | |
| | 2-Wire Coin Outward with Operator Screening and 011 Blocking (GA, KY, MS) | | | UEPCO | UEPRJ | 1.23 | 40.31 | 19.84 | 24.90 | 6.58 | | | | | | |
| | 2-Wire Coin Outward with Operator Screening and 011 Blocking; with Dialing Parity (MS) | | | UEPCO | UEPMD | 1.23 | 40.31 | 19.84 | 24.90 | 6.58 | | | | | | |
| | 2-Wire Coin Outward with Operator Screening and Blocking: 011, 900/976, 1+DDD (AL, KY, LA, MS) | | | UEPCO | UEPRH | 1.23 | 40.31 | 19.84 | 24.90 | 6.58 | | | | | | |
| | 2-Wire Coin Outward Operator Screening & Blocking: 900/976, 1+DDD, 011+, and Local (AL, KY, LA, MS) | | | UEPCO | UEPCN | 1.23 | 40.31 | 19.84 | 24.90 | 6.58 | | | | | | |
| | 2-Wire Coin Out Operator Screen & Block: 900/976, 1+DDD, 011+, and Local; with Dialing Parity (MS) | | | UEPCO | UEPCS | 1.23 | 40.31 | 19.84 | 24.90 | 6.58 | | | | | | |
| | 2-Wire 2-Way Smartline with 900/976 (all states except LA) | | | UEPCO | UEPCK | 1.23 | 40.31 | 19.84 | 24.90 | 6.58 | | | | | | |
| | 2-Wire Coin Outward Smartline with 900/976 (all states except LA) | | | UEPCO | UEPCR | 1.23 | 40.31 | 19.84 | 24.90 | 6.58 | | | | | | |
| **ADDITIONAL UNE COIN PORT/LOOP (RC)** | | | | | | | | | | | | | | | | |
| | UNE Coin Port/Loop Combo Usage (Flat Rate) | | | UEPCO | URECU | 4.62 | 0.00 | 0.00 | 0.00 | 0.00 | | | | | | |
| **LOCAL NUMBER PORTABILITY** | | | | | | | | | | | | | | | | |
| | Local Number Portability (1 per port) | | | UEPCO | LNPCX | 0.35 | | | | | | | | | | |
| **NONRECURRING CHARGES - CURRENTLY COMBINED** | | | | | | | | | | | | | | | | |
| | 2-Wire Voice Grade Loop / Line Port Combination - Conversion - Switch-as-is | | | UEPCO | USAC2 | | 0.0988 | 0.0988 | | | | | | | | |
| | 2-Wire Voice Grade Loop / Line Port Combination - Conversion - Switch with change | | | UEPCO | USACC | | 0.0988 | 0.0988 | | | | | | | | |
| **ADDITIONAL NRCs** | | | | | | | | | | | | | | | | |
| | 2-Wire Voice Grade Loop/Line Port Combination - Subsequent Activity | | | UEPCO | USAS2 | | 0.00 | 0.00 | | | | | | | | |
| | Unbundled Miscellaneous Rate Element, Tag Loop at End User Premise | | | UEPCO | URETL | | 8.33 | 0.83 | | | | | | | | |
| **2-WIRE VOICE LOOP/ 2WIRE VOICE GRADE IO TRANSPORT/ 2-WIRE LINE PORT (RES)** | | | | | | | | | | | | | | | | |
| **UNE Port/Loop Combination Rates** | | | | | | | | | | | | | | | | |
| | 2-Wire VG Loop/IO Tranport/Port Combo - Zone 1 | | 1 | | | 15.16 | | | | | | | | | | |
| | 2-Wire VG Loop/IO Tranport/Port Combo - Zone 2 | | 2 | | | 20.02 | | | | | | | | | | |
| | 2-Wire VG Loop/IO Tranport/Port Combo - Zone 3 | | 3 | | | 28.82 | | | | | | | | | | |
| | 2-Wire VG Loop/IO Tranport/Port Combo - Zone 4 | | 4 | | | 46.99 | | | | | | | | | | |
| **UNE Loop Rates** | | | | | | | | | | | | | | | | |
| | 2-Wire Voice Grade Loop (SL2) - Zone 1 | | 1 | UEPFR | UECF2 | 13.89 | | | | | | | | | | |
| | 2-Wire Voice Grade Loop (SL2) - Zone 2 | | 2 | UEPFR | UECF2 | 18.75 | | | | | | | | | | |
| | 2-Wire Voice Grade Loop (SL2) - Zone 3 | | 3 | UEPFR | UECF2 | 27.55 | | | | | | | | | | |
| | 2-Wire Voice Grade Loop (SL2) - Zone 4 | | 4 | UEPFR | UECF2 | 45.72 | | | | | | | | | | |
| **2-Wire Voice Grade Line Port Rates (Res)** | | | | | | | | | | | | | | | | |
| | 2-Wire voice unbundled port - residence | | | UEPFR | UEPRL | 1.27 | 108.35 | 70.57 | 54.24 | 11.70 | | | | | | |
| | 2-Wire voice unbundled port with Caller ID - res | | | UEPFR | UEPRC | 1.27 | 108.35 | 70.57 | 54.24 | 11.70 | | | | | | |

## UNBUNDLED NETWORK ELEMENTS - Mississippi

| CATEGORY | RATE ELEMENTS | Interim | Zone | BCS | USOC | RATES ($) | | | | | Svc Order Submitted Elec per LSR | Svc Order Submitted Manually per LSR | Attachment: 2 | | Exhibit: A | |
|---|---|---|---|---|---|---|---|---|---|---|---|---|---|---|---|---|
| | | | | | | | | | | | | | Incremental Charge - Manual Svc Order vs. Electronic-1st | Incremental Charge - Manual Svc Order vs. Electronic-Add'l | Incremental Charge - Manual Svc Order vs. Electronic-Disc 1st | Incremental Charge - Manual Svc Order vs. Electronic-Disc Add'l |
| | | | | | | Rec | Nonrecurring | | Nonrecurring Disconnect | | OSS Rates ($) | | | | | |
| | | | | | | | First | Add'l | First | Add'l | SOMEC | SOMAN | SOMAN | SOMAN | SOMAN | SOMAN |
| | 2-Wire voice unbundled port outgoing only - res | | | UEPFR | UEPRO | 1.27 | 108.35 | 70.57 | 54.24 | 11.70 | | | | | | |
| | 2-Wire voice Grade unbundled Mississippi extended local dialing parity port with Caller ID - res | | | UEPFR | UEPAT | 1.27 | 108.35 | 70.57 | 54.24 | 11.70 | | | | | | |
| | 2-Wire voice unbundles res, low usage line port with Caller ID (LUM) | | | UEPFR | UEPAP | 1.27 | 108.35 | 70.57 | 54.24 | 11.70 | | | | | | |
| | 2-Wire Voice Unbundled Mississippi Residence Dialing Plan without Caller ID | | | UEPFR | UEPWJ | 1.27 | 108.35 | 70.57 | 54.24 | 11.70 | | | | | | |
| **INTEROFFICE TRANSPORT** | | | | | | | | | | | | | | | | |
| | Interoffice Transport - Dedicated - 2 Wire Voice Grade - Facility Termination | | | UEPFR | U1TV2 | 20.32 | 40.77 | 27.57 | 17.26 | 7.11 | | | | | | |
| | Interoffice Transport - Dedicated - 2 Wire Voice Grade - Per Mile or Fraction Mile | | | UEPFR | 1L5XX | 0.0088 | | | | | | | | | | |
| **FEATURES** | | | | | | | | | | | | | | | | |
| | All Features Offered | | | UEPFR | UEPVF | 2.56 | 0.00 | 0.00 | | | | | | | | |
| **LOCAL NUMBER PORTABILITY** | | | | | | | | | | | | | | | | |
| | Local Number Portability (1 per port) | | | UEPFR | LNPCX | 0.35 | | | | | | | | | | |
| **NONRECURRING CHARGES (NRCs) - CURRENTLY COMBINED** | | | | | | | | | | | | | | | | |
| | 2-Wire Loop / Dedicated IO Transport / 2 Wire Line Port Combination - Conversion - Switch-as-is | | | UEPFR | USAC2 | | 16.94 | 3.72 | | | | | | | | |
| | 2-Wire Loop / Dedicated IO Transport / 2 Wire Line Port Combination - Conversion - Switch-With-Change | | | UEPFR | USACC | | 16.94 | 3.72 | | | | | | | | |
| | Unbundled Miscellaneous Rate Element, Tag Designed Loop at End User Premise | | | UEPFR | URETN | | 11.19 | 1.10 | | | | | | | | |
| **2-WIRE VOICE LOOP/ 2WIRE VOICE GRADE IO TRANSPORT/ 2-WIRE LINE PORT (BUS)** | | | | | | | | | | | | | | | | |
| **UNE Port/Loop Combination Rates** | | | | | | | | | | | | | | | | |
| | 2-Wire VG Loop/IO Tranport/Port Combo - Zone 1 | | 1 | | | 15.16 | | | | | | | | | | |
| | 2-Wire VG Loop/IO Tranport/Port Combo - Zone 2 | | 2 | | | 20.02 | | | | | | | | | | |
| | 2-Wire VG Loop/IO Tranport/Port Combo - Zone 3 | | 3 | | | 28.82 | | | | | | | | | | |
| | 2-Wire VG Loop/IO Tranport/Port Combo - Zone 4 | | 4 | | | 46.99 | | | | | | | | | | |
| **UNE Loop Rates** | | | | | | | | | | | | | | | | |
| | 2-Wire Voice Grade Loop (SL2) - Zone 1 | | 1 | UEPFB | UECF2 | 13.89 | | | | | | | | | | |
| | 2-Wire Voice Grade Loop (SL2) - Zone 2 | | 2 | UEPFB | UECF2 | 18.75 | | | | | | | | | | |
| | 2-Wire Voice Grade Loop (SL2) - Zone 3 | | 3 | UEPFB | UECF2 | 27.55 | | | | | | | | | | |
| | 2-Wire Voice Grade Loop (SL2) - Zone 4 | | 4 | UEPFB | UECF2 | 45.72 | | | | | | | | | | |
| **2-Wire Voice Grade Line Port (Bus)** | | | | | | | | | | | | | | | | |
| | 2-Wire voice unbundled port without Caller ID - bus | | | UEPFB | UEPBL | 1.27 | 108.35 | 70.57 | 54.24 | 11.70 | | | | | | |
| | 2-Wire voice unbundled port with Caller + E484 ID - bus | | | UEPFB | UEPBC | 1.27 | 108.35 | 70.57 | 54.24 | 11.70 | | | | | | |
| | 2-Wire voice unbundled port outgoing only - bus | | | UEPFB | UEPBO | 1.27 | 108.35 | 70.57 | 54.24 | 11.70 | | | | | | |
| | 2-Wire voice Grade unbundled Mississippi extended local dialing parity port with Caller ID - bus | | | UEPFB | UEPAY | 1.27 | 108.35 | 70.57 | 54.24 | 11.70 | | | | | | |
| | 2-Wire voice unbundled incoming only port with Caller ID - Bus | | | UEPFB | UEPB1 | 1.27 | 108.35 | 70.57 | 54.24 | 11.70 | | | | | | |
| | 2-Wire Voice Unbundled Mississippi Business Dialing Plan without Caller ID | | | UEPFB | UEPWK | 1.27 | 108.35 | 70.57 | 54.24 | 11.70 | | | | | | |
| **LOCAL NUMBER PORTABILITY** | | | | | | | | | | | | | | | | |
| | Local Number Portability (1 per port) | | | UEPFB | LNPCX | 0.35 | | | | | | | | | | |
| **INTEROFFICE TRANSPORT** | | | | | | | | | | | | | | | | |
| | Interoffice Transport - Dedicated - 2 Wire Voice Grade - Facility Termination | | | UEPFB | U1TV2 | 20.32 | 40.77 | 27.57 | 17.26 | 7.11 | | | | | | |
| | Interoffice Transport - Dedicated - 2 Wire Voice Grade - Per Mile or Fraction Mile | | | UEPFB | 1L5XX | 0.0088 | | | | | | | | | | |
| **FEATURES** | | | | | | | | | | | | | | | | |
| | All Features Offered | | | UEPFB | UEPVF | 2.56 | 0.00 | 0.00 | | | | | | | | |
| **NONRECURRING CHARGES (NRCs) - CURRENTLY COMBINED** | | | | | | | | | | | | | | | | |
| | 2-Wire Loop / Dedicated IO Transport / 2 Wire Line Port Combination - Conversion - Switch-as-is | | | UEPFB | USAC2 | | 16.94 | 3.72 | | | | | | | | |
| | 2-Wire Loop / Dedicated IO Transport / 2 Wire Line Port Combination - Conversion - Switch with change | | | UEPFB | USACC | | 16.94 | 3.72 | | | | | | | | |
| | Unbundled Miscellaneous Rate Element, Tag Designed Loop at End User Premise | | | UEPFB | URETN | | 11.19 | 1.10 | | | | | | | | |

| UNBUNDLED NETWORK ELEMENTS - Mississippi | | | | | | | | | | | | | Attachment: 2 | | Exhibit: A | |
|---|---|---|---|---|---|---|---|---|---|---|---|---|---|---|---|---|
| CATEGORY | RATE ELEMENTS | Interim | Zone | BCS | USOC | RATES ($) | | | | | Svc Order Submitted Elec per LSR | Svc Order Submitted Manually per LSR | Incremental Charge - Manual Svc Order vs. Electronic-1st | Incremental Charge - Manual Svc Order vs. Electronic-Add'l | Incremental Charge - Manual Svc Order vs. Electronic-Disc 1st | Incremental Charge - Manual Svc Order vs. Electronic-Disc Add'l |
| | | | | | | Rec | Nonrecurring | | Nonrecurring Disconnect | | OSS Rates ($) | | | | | |
| | | | | | | | First | Add'l | First | Add'l | SOMEC | SOMAN | SOMAN | SOMAN | SOMAN | SOMAN |
| 2-WIRE VOICE LOOP/ 2WIRE VOICE GRADE IO TRANSPORT/ 2-WIRE LINE PORT (PBX) | | | | | | | | | | | | | | | | |
| UNE Port/Loop Combination Rates | | | | | | | | | | | | | | | | |
| | 2-Wire VG Loop/IO Tranport/Port Combo - Zone 1 | | 1 | | | 15.16 | | | | | | | | | | |
| | 2-Wire VG Loop/IO Tranport/Port Combo - Zone 2 | | 2 | | | 20.02 | | | | | | | | | | |
| | 2-Wire VG Loop/IO Tranport/Port Combo - Zone 3 | | 3 | | | 28.82 | | | | | | | | | | |
| | 2-Wire VG Loop/IO Tranport/Port Combo - Zone 4 | | 4 | | | 46.99 | | | | | | | | | | |
| UNE Loop Rates | | | | | | | | | | | | | | | | |
| | 2-Wire Voice Grade Loop (SL2) - Zone 1 | | 1 | UEPFP | UECF2 | 13.89 | | | | | | | | | | |
| | 2-Wire Voice Grade Loop (SL2) - Zone 2 | | 2 | UEPFP | UECF2 | 18.75 | | | | | | | | | | |
| | 2-Wire Voice Grade Loop (SL2) - Zone 3 | | 3 | UEPFP | UECF2 | 27.55 | | | | | | | | | | |
| | 2-Wire Voice Grade Loop (SL2) - Zone 4 | | 4 | UEPFP | UECF2 | 45.72 | | | | | | | | | | |
| 2-Wire Voice Grade Line Port Rates (BUS - PBX) | | | | | | | | | | | | | | | | |
| | Line Side Unbundled Combination 2-Way PBX Trunk Port - Bus | | | UEPFP | UEPPC | 1.27 | 137.41 | 80.14 | 67.20 | 11.29 | | | | | | |
| | Line Side Unbundled Outward PBX Trunk Port - Bus | | | UEPFP | UEPPO | 1.27 | 137.41 | 80.14 | 67.20 | 11.29 | | | | | | |
| | Line Side Unbundled Incoming PBX Trunk Port - Bus | | | UEPFP | UEPP1 | 1.27 | 137.41 | 80.14 | 67.20 | 11.29 | | | | | | |
| | 2-Wire Voice Unbundled PBX LD Terminal Ports | | | UEPFP | UEPLD | 1.27 | 137.41 | 80.14 | 67.20 | 11.29 | | | | | | |
| | 2-Wire Voice Unbundled 2-Way Combination PBX Usage Port | | | UEPFP | UEPXA | 1.27 | 137.41 | 80.14 | 67.20 | 11.29 | | | | | | |
| | 2-Wire Voice Unbundled PBX Toll Terminal Hotel Ports | | | UEPFP | UEPXB | 1.27 | 137.41 | 80.14 | 67.20 | 11.29 | | | | | | |
| | 2-Wire Voice Unbundled PBX LD DDD Terminals Port | | | UEPFP | UEPXC | 1.27 | 137.41 | 80.14 | 67.20 | 11.29 | | | | | | |
| | 2-Wire Voice Unbundled PBX LD Terminal Switchboard Port | | | UEPFP | UEPXD | 1.27 | 137.41 | 80.14 | 67.20 | 11.29 | | | | | | |
| | 2-Wire Voice Unbundled PBX LD Terminal Switchboard IDD Capable Port | | | UEPFP | UEPXE | 1.27 | 137.41 | 80.14 | 67.20 | 11.29 | | | | | | |
| | 2-Wire Voice Unbundled 2-Way PBX Hotel/Hospital Economy Administrative Calling Port | | | UEPFP | UEPXL | 1.27 | 137.41 | 80.14 | 67.20 | 11.29 | | | | | | |
| | 2-Wire Voice Unbundled 2-Way PBX Hotel/Hospital Economy Room Calling Port | | | UEPFP | UEPXM | 1.27 | 137.41 | 80.14 | 67.20 | 11.29 | | | | | | |
| | 2-Wire Voice Unbundled 1-Way Outgoing PBX Hotel/Hospital Discount Room Calling Port | | | UEPFP | UEPXO | 1.27 | 137.41 | 80.14 | 67.20 | 11.29 | | | | | | |
| | 2-Wire Voice Unbundled 2-Way PBX Mississippi Local Economy Calling Port | | | UEPFP | UEPXQ | 1.27 | 137.41 | 80.14 | 67.20 | 11.29 | | | | | | |
| | 2-Wire Voice Unbundled 2-Way PBX Mississippi Local Optional Calling Port | | | UEPFP | UEPXR | 1.27 | 137.41 | 80.14 | 67.20 | 11.29 | | | | | | |
| | 2-Wire Voice Unbundled 1-Way Outgoing PBX Measured Port | | | UEPFP | UEPXS | 1.27 | 137.41 | 80.14 | 67.20 | 11.29 | | | | | | |
| | Mississippi PBX 2-Way Combo Local Opt 2 Calling Port | | | UEPFP | UEPA5 | 1.27 | 137.41 | 80.14 | 67.20 | 11.29 | | | | | | |
| LOCAL NUMBER PORTABILITY | | | | | | | | | | | | | | | | |
| | Local Number Portability (1 per port) | | | UEPFP | LNPCP | 3.15 | 0.00 | 0.00 | | | | | | | | |
| INTEROFFICE TRANSPORT | | | | | | | | | | | | | | | | |
| | Interoffice Transport - Dedicated - 2 Wire Voice Grade - Facility Termination | | | UEPFP | U1TV2 | 20.32 | 40.77 | 27.57 | 17.26 | 7.11 | | | | | | |
| | Interoffice Transport - Dedicated - 2 Wire Voice Grade - Per Mile or Fraction Mile | | | UEPFP | 1L5XX | 0.0088 | | | | | | | | | | |
| FEATURES | | | | | | | | | | | | | | | | |
| | All Features Offered | | | UEPFP | UEPVF | 2.56 | 0.00 | 0.00 | | | | | | | | |
| NONRECURRING CHARGES (NRCs) - CURRENTLY COMBINED | | | | | | | | | | | | | | | | |
| | 2-Wire Loop / Dedicated IO Transport / 2 Wire Line Port Combination - Conversion - Switch-as-is | | | UEPFP | USAC2 | | 16.94 | 3.72 | | | | | | | | |
| | 2-Wire Loop / Dedicated IO Transport / 2 Wire Line Port Combination - Conversion - Switch with change | | | UEPFP | USACC | | 16.94 | 3.72 | | | | | | | | |
| | Unbundled Miscellaneous Rate Element, Tag Designed Loop at End User Premise | | | UEPFP | URETN | | 11.19 | 1.10 | | | | | | | | |
| UNBUNDLED PORT/LOOP COMBINATIONS - COST BASED RATES | | | | | | | | | | | | | | | | |
| 2-WIRE VOICE GRADE LOOP- BUS ONLY - WITH 2-WIRE DID TRUNK PORT | | | | | | | | | | | | | | | | |
| UNE Port/Loop Combination Rates | | | | | | | | | | | | | | | | |
| | 2-Wire VG Loop/2-Wire DID Trunk Port Combo - UNE Zone 1 | | 1 | | | 21.32 | | | | | | | | | | |
| | 2-Wire VG Loop/2-Wire DID Trunk Port Combo - UNE Zone 2 | | 2 | | | 26.16 | | | | | | | | | | |
| | 2-Wire VG Loop/2-Wire DID Trunk Port Combo - UNE Zone 3 | | 3 | | | 34.98 | | | | | | | | | | |
| | 2-Wire VG Loop/2-Wire DID Trunk Port Combo - UNE Zone 4 | | 4 | | | 53.15 | | | | | | | | | | |
| UNE Loop Rates | | | | | | | | | | | | | | | | |

## UNBUNDLED NETWORK ELEMENTS - Mississippi

| CATEGORY | RATE ELEMENTS | Interim | Zone | BCS | USOC | RATES ($) | | | | | Svc Order Submitted Elec per LSR | Svc Order Submitted Manually per LSR | Attachment: 2 Incremental Charge - Manual Svc Order vs. Electronic- 1st | Attachment: 2 Incremental Charge - Manual Svc Order vs. Electronic- Add'l | Exhibit: A Incremental Charge - Manual Svc Order vs. Electronic- Disc 1st | Exhibit: A Incremental Charge - Manual Svc Order vs. Electronic- Disc Add'l |
|---|---|---|---|---|---|---|---|---|---|---|---|---|---|---|---|---|
| | | | | | | Rec | Nonrecurring | | Nonrecurring Disconnect | | OSS Rates ($) | | | | | |
| | | | | | | | First | Add'l | First | Add'l | SOMEC | SOMAN | SOMAN | SOMAN | SOMAN | SOMAN |
| | 2-Wire Analog Voice Grade Loop - (SL2) - UNE Zone 1 | | 1 | UEPPX | UECD1 | 13.89 | | | | | | | | | | |
| | 2-Wire Analog Voice Grade Loop - (SL2) - UNE Zone 2 | | 2 | UEPPX | UECD1 | 18.75 | | | | | | | | | | |
| | 2-Wire Analog Voice Grade Loop - (SL2) - UNE Zone 3 | | 3 | UEPPX | UECD1 | 27.55 | | | | | | | | | | |
| | 2-Wire Analog Voice Grade Loop - (SL2) - UNE Zone 4 | | 4 | UEPPX | UECD1 | 45.72 | | | | | | | | | | |
| **UNE Port Rate** | | | | | | | | | | | | | | | | |
| | Exchange Ports - 2-Wire DID Port | | | UEPPX | UEPD1 | 7.43 | 225.96 | 87.13 | 114.59 | 14.25 | | | | | | |
| **NONRECURRING CHARGES - CURRENTLY COMBINED** | | | | | | | | | | | | | | | | |
| | 2-Wire Voice Grade Loop / 2-Wire DID Trunk Port Combination - Switch-as-is | | | UEPPX | USAC1 | | 7.35 | 1.88 | | | | | | | | |
| | 2-Wire Voice Grade Loop / 2-Wire DID Trunk Port Conversion with BellSouth Allowable Changes | | | UEPPX | USA1C | | 7.35 | 1.88 | | | | | | | | |
| **ADDITIONAL NRCs** | | | | | | | | | | | | | | | | |
| | 2-Wire DID Subsequent Activity - Add Trunks, Per Trunk | | | UEPPX | USAS1 | | 26.94 | 26.94 | | | | | | | | |
| | Unbundled Miscellaneous Rate Element, Tag Designed Loop at End User Premise | | | UEPPX | URETN | | 11.19 | 1.10 | | | | | | | | |
| **Telephone Number/Trunk Group Establisment Charges** | | | | | | | | | | | | | | | | |
| | DID Trunk Termination (One Per Port) | | | UEPPX | NDT | 0.00 | 0.00 | 0.00 | | | | | | | | |
| | Additional DID Numbers for each Group of 20 DID Numbers | | | UEPPX | ND4 | 0.00 | 0.00 | 0.00 | | | | | | | | |
| | DID Numbers, Non- consecutive DID Numbers , Per Number | | | UEPPX | ND5 | 0.00 | 0.00 | 0.00 | | | | | | | | |
| | Reserve Non-Consecutive DID numbers | | | UEPPX | ND6 | 0.00 | 0.00 | 0.00 | | | | | | | | |
| | Reserve DID Numbers | | | UEPPX | NDV | 0.00 | 0.00 | 0.00 | | | | | | | | |
| **LOCAL NUMBER PORTABILITY** | | | | | | | | | | | | | | | | |
| | Local Number Portability (1 per port) | | | UEPPX | LNPCP | 3.15 | 0.00 | 0.00 | | | | | | | | |
| **2-WIRE ISDN DIGITAL GRADE LOOP WITH 2-WIRE ISDN DIGITAL LINE SIDE PORT** | | | | | | | | | | | | | | | | |
| **UNE Port/Loop Combination Rates** | | | | | | | | | | | | | | | | |
| | 2W ISDN Digital Grade Loop/2W ISDN Digital Line Side Port - UNE Zone 1 | | 1 | UEPPB UEPPR | | 28.59 | | | | | | | | | | |
| | 2W ISDN Digital Grade Loop/2W ISDN Digital Line Side Port - UNE Zone 2 | | 2 | UEPPB UEPPR | | 35.00 | | | | | | | | | | |
| | 2W ISDN Digital Grade Loop/2W ISDN Digital Line Side Port - UNE Zone 3 | | 3 | UEPPB UEPPR | | 45.18 | | | | | | | | | | |
| | 2W ISDN Digital Grade Loop/2W ISDN Digital Line Side Port - UNE Zone 4 | | 4 | | | 67.61 | | | | | | | | | | |
| **UNE Loop Rates** | | | | | | | | | | | | | | | | |
| | 2-Wire ISDN Digital Grade Loop - UNE Zone 1 | | 1 | UEPPB UEPPR | USL2X | 18.26 | | | | | | | | | | |
| | 2-Wire ISDN Digital Grade Loop - UNE Zone 2 | | 2 | UEPPB UEPPR | USL2X | 24.67 | | | | | | | | | | |
| | 2-Wire ISDN Digital Grade Loop - UNE Zone 3 | | 3 | UEPPB UEPPR | USL2X | 34.85 | | | | | | | | | | |
| | 2-Wire ISDN Digital Grade Loop - UNE Zone 4 | | 4 | UEPPB UEPPR | USL2X | 57.28 | | | | | | | | | | |
| **UNE Port Rate** | | | | | | | | | | | | | | | | |
| | Exchange Port - 2-Wire ISDN Line Side Port | | | UEPPB UEPPR | UEPPB | 10.33 | 190.80 | 133.22 | 100.72 | 21.13 | | | | | | |
| **NONRECURRING CHARGES - CURRENTLY COMBINED** | | | | | | | | | | | | | | | | |
| | 2-Wire ISDN Digital Grade Loop / 2-Wire ISDN Line Side Port Combination - Conversion | | | UEPPB UEPPR | USACB | 0.00 | 38.73 | 27.17 | | | | | | | | |
| **ADDITIONAL NRCs** | | | | | | | | | | | | | | | | |
| | Unbundled Miscellaneous Rate Element, Tag Designed Loop at End User Premise | | | UEPPB UEPPR | URETN | | 11.19 | 1.10 | | | | | | | | |
| | Unbundled Miscellaneous Rate Element, Tag Loop at End User Premise | | | UEPPB UEPPR | URETL | | 8.33 | 0.83 | | | | | | | | |
| **LOCAL NUMBER PORTABILITY** | | | | | | | | | | | | | | | | |
| | Local Number Portability (1 per port) | | | UEPPB UEPPR | LNPCX | 0.35 | 0.00 | 0.00 | | | | | | | | |
| **B-CHANNEL USER PROFILE ACCESS:** | | | | | | | | | | | | | | | | |
| | CVS/CSD (DMS/5ESS) | | | UEPPB UEPPR | U1UCA | 0.00 | 0.00 | 0.00 | | | | | | | | |
| | CVS (EWSD) | | | UEPPB UEPPR | U1UCB | 0.00 | 0.00 | 0.00 | | | | | | | | |
| | CSD | | | UEPPB UEPPR | U1UCC | 0.00 | 0.00 | 0.00 | | | | | | | | |
| **B-CHANNEL AREA PLUS USER PROFILE ACCESS: (AL,KY,LA,MS SC,MS, & TN)** | | | | | | | | | | | | | | | | |
| | CVS/CSD (DMS/5ESS) | | | UEPPB UEPPR | U1UCD | 0.00 | 0.00 | 0.00 | | | | | | | | |
| | CVS (EWSD) | | | UEPPB UEPPR | U1UCE | 0.00 | 0.00 | 0.00 | | | | | | | | |
| | CSD | | | UEPPB UEPPR | U1UCF | 0.00 | 0.00 | 0.00 | | | | | | | | |

## UNBUNDLED NETWORK ELEMENTS - Mississippi

| CATEGORY | RATE ELEMENTS | Interim | Zone | BCS | USOC | RATES ($) | | | | | Svc Order Submitted Elec per LSR | Svc Order Submitted Manually per LSR | Attachment: 2 Incremental Charge - Manual Svc Order vs. Electronic-1st | Attachment: 2 Incremental Charge - Manual Svc Order vs. Electronic-Add'l | Exhibit: A Incremental Charge - Manual Svc Order vs. Electronic-Disc 1st | Exhibit: A Incremental Charge - Manual Svc Order vs. Electronic-Disc Add'l |
|---|---|---|---|---|---|---|---|---|---|---|---|---|---|---|---|---|
| | | | | | | Rec | Nonrecurring | | Nonrecurring Disconnect | | OSS Rates ($) | | | | | |
| | | | | | | | First | Add'l | First | Add'l | SOMEC | SOMAN | SOMAN | SOMAN | SOMAN | SOMAN |
| **USER TERMINAL PROFILE** | | | | | | | | | | | | | | | | |
| | User Terminal Profile (EWSD only) | | | UEPPB UEPPR | U1UMA | 0.00 | 0.00 | 0.00 | | | | | | | | |
| **VERTICAL FEATURES** | | | | | | | | | | | | | | | | |
| | All Vertical Features - One per Channel B User Profile | | | UEPPB UEPPR | UEPVF | 2.56 | 0.00 | 0.00 | | | | | | | | |
| **INTEROFFICE CHANNEL MILEAGE** | | | | | | | | | | | | | | | | |
| | Interoffice Channel mileage each, including first mile and facilities termination | | | UEPPB UEPPR | M1GNC | 22.5298 | 40.77 | 27.57 | 17.26 | 7.11 | | | | | | |
| | Interoffice Channel mileage each, additional mile | | | UEPPB UEPPR | M1GNM | 0.0098 | 0.00 | 0.00 | | | | | | | | |
| **4-WIRE DS1 DIGITAL LOOP WITH 4-WIRE ISDN DS1 DIGITAL TRUNK PORT** | | | | | | | | | | | | | | | | |
| **The UNE-P DS1 combination rates below for in this rate exhibit apply to the embedded base in place as of 10/2/03 until 4/1/04. After 4/1/04 these rates shall revert to tariff rates or a separate commercial agreement.** | | | | | | | | | | | | | | | | |
| **Requests for 4-Wire DS1 Digital Loop with 4-Wire ISDN DS1 Digital Trunk Port after the effective date of this amendment shall be provided pursuant to a separate agreement or tariff at BellSouth's discretion.** | | | | | | | | | | | | | | | | |
| **UNE Port/Loop Combination Rates** | | | | | | | | | | | | | | | | |
| | 4W DS1 Digital Loop/4W ISDN DS1 Digital Trunk Port - UNE Zone 1 | | 1 | UEPPP | | 155.43 | | | | | | | | | | |
| | 4W DS1 Digital Loop/4W ISDN DS1 Digital Trunk Port - UNE Zone 2 | | 2 | UEPPP | | 205.74 | | | | | | | | | | |
| | 4W DS1 Digital Loop/4W ISDN DS1 Digital Trunk Port - UNE Zone 3 | | 3 | UEPPP | | 283.10 | | | | | | | | | | |
| | 4W DS1 Digital Loop/4W ISDN DS1 Digital Trunk Port - UNE Zone 4 | | 4 | UEPPP | | 534.81 | | | | | | | | | | |
| **UNE Loop Rates** | | | | | | | | | | | | | | | | |
| | 4-Wire DS1 Digital Loop - UNE Zone 1 | | 1 | UEPPP | USL4P | 79.08 | | | | | | | | | | |
| | 4-Wire DS1 Digital Loop - UNE Zone 2 | | 2 | UEPPP | USL4P | 129.38 | | | | | | | | | | |
| | 4-Wire DS1 Digital Loop - UNE Zone 3 | | 3 | UEPPP | USL4P | 206.74 | | | | | | | | | | |
| | 4-Wire DS1 Digital Loop - UNE Zone 4 | | 4 | UEPPP | USL4P | 458.46 | | | | | | | | | | |
| **UNE Port Rate** | | | | | | | | | | | | | | | | |
| | Exchange Ports - 4-Wire ISDN DS1 Port (E:4/1/2004) | | | UEPPP | UEPPP | 76.35 | 458.93 | 260.59 | 127.75 | 32.76 | | | | | | |
| **NONRECURRING CHARGES - CURRENTLY COMBINED** | | | | | | | | | | | | | | | | |
| | 4-Wire DS1 Digital Loop / 4-Wire ISDN DS1 Digital Trunk Port Combination - Conversion -Switch-as-is (E:4/1/2004) | | | UEPPP | USACP | 0.00 | 119.76 | 79.01 | | | | | | | | |
| **ADDITIONAL NRCs** | | | | | | | | | | | | | | | | |
| | 4-Wire DS1 Loop/4-W ISDN Digtl Trk Port - Subsqt Actvy-Inward/two way Tel Nos. (except NC) | | | UEPPP | PR7TF | | 0.49 | | | | | | | | | |
| | 4-Wire DS1 Loop / 4-Wire ISDN DS1 Digital Trunk Port - Outward Tel Numbers (All States except NC) | | | UEPPP | PR7TO | | 11.58 | 11.58 | | | | | | | | |
| | 4-Wire DS1 Loop / 4-Wire ISDN DS1 Digital Trk Port - Subsequent Inward Tel Numbers | | | UEPPP | PR7ZT | | 23.15 | 23.15 | | | | | | | | |
| **LOCAL NUMBER PORTABILITY** | | | | | | | | | | | | | | | | |
| | Local Number Portability (1 per port) | | | UEPPP | LNPCN | 1.75 | | | | | | | | | | |
| **INTERFACE (Provsioning Only)** | | | | | | | | | | | | | | | | |
| | Voice/Data | | | UEPPP | PR71V | 0.00 | 0.00 | 0.00 | | | | | | | | |
| | Digital Data | | | UEPPP | PR71D | 0.00 | 0.00 | 0.00 | | | | | | | | |
| | Inward Data | | | UEPPP | PR71E | 0.00 | 0.00 | 0.00 | | | | | | | | |
| **New or Additional "B" Channel** | | | | | | | | | | | | | | | | |
| | New or Additional - Voice/Data B Channel | | | UEPPP | PR7BV | 0.00 | 14.61 | | | | | | | | | |
| | New or Additional - Digital Data B Channel | | | UEPPP | PR7BF | 0.00 | 14.61 | | | | | | | | | |
| | New or Additional Inward Data B Channel | | | UEPPP | PR7BD | 0.00 | 14.61 | | | | | | | | | |
| **CALL TYPES** | | | | | | | | | | | | | | | | |
| | Inward | | | UEPPP | PR7C1 | 0.00 | 0.00 | 0.00 | | | | | | | | |
| | Outward | | | UEPPP | PR7CO | 0.00 | 0.00 | 0.00 | | | | | | | | |
| | Two-way | | | UEPPP | PR7CC | 0.00 | 0.00 | 0.00 | | | | | | | | |
| **Interoffice Channel Mileage** | | | | | | | | | | | | | | | | |
| | Fixed Each Including First Mile | | | UEPPP | 1LN1A | 57.53 | 89.79 | 82.28 | 16.66 | 14.90 | | | | | | |
| | Each Airline-Fractional Additional Mile | | | UEPPP | 1LN1B | 0.20 | | | | | | | | | | |
| **4-WIRE DS1 DIGITAL LOOP WITH 4-WIRE DDITS TRUNK PORT** | | | | | | | | | | | | | | | | |
| **The UNE-P DS1 combination rates below for in this rate exhibit apply to the embedded base in place as of 10/2/03 until 4/1/04. After 4/1/04 these rates shall revert to tariff rates or a separate commercial agreement.** | | | | | | | | | | | | | | | | |
| **Requests for 4-Wire DS1 Digital Loop with 4-Wire DDITS after the effective date of this amendment shall be provided pursuant to a separate agreement or tariff at BellSouth's discretion.** | | | | | | | | | | | | | | | | |
| **UNE Port/Loop Combination Rates** | | | | | | | | | | | | | | | | |
| | 4W DS1 Digital Loop/4W DDITS Trunk Port - UNE Zone 1 | | 1 | UEPDC | | 131.78 | | | | | | | | | | |

## UNBUNDLED NETWORK ELEMENTS - Mississippi

Attachment: 2 | Exhibit: A

| CATEGORY | RATE ELEMENTS | Interim | Zone | BCS | USOC | RATES ($) | | | | | Svc Order Submitted Elec per LSR | Svc Order Submitted Manually per LSR | Incremental Charge - Manual Svc Order vs. Electronic- 1st | Incremental Charge - Manual Svc Order vs. Electronic- Add'l | Incremental Charge - Manual Svc Order vs. Electronic- Disc 1st | Incremental Charge - Manual Svc Order vs. Electronic- Disc Add'l |
|---|---|---|---|---|---|---|---|---|---|---|---|---|---|---|---|---|
| | | | | | | Rec | Nonrecurring | | Nonrecurring Disconnect | | OSS Rates ($) | | | | | |
| | | | | | | | First | Add'l | First | Add'l | SOMEC | SOMAN | SOMAN | SOMAN | SOMAN | SOMAN |
| | 4W DS1 Digital Loop/4W DDITS Trunk Port - UNE Zone 2 | | 2 | UEPDC | | 182.07 | | | | | | | | | | |
| | 4W DS1 Digital Loop/4W DDITS Trunk Port - UNE Zone 3 | | 3 | UEPDC | | 259.44 | | | | | | | | | | |
| | 4W DS1 Digital Loop/4W DDITS Trunk Port - UNE Zone 4 | | 4 | UEPDC | | 511.15 | | | | | | | | | | |
| **UNE Loop Rates** | | | | | | | | | | | | | | | | |
| | 4-Wire DS1 Digital Loop - UNE Zone 1 | | 1 | UEPDC | USLDC | 79.08 | | | | | | | | | | |
| | 4-Wire DS1 Digital Loop - UNE Zone 2 | | 2 | UEPDC | USLDC | 129.38 | | | | | | | | | | |
| | 4-Wire DS1 Digital Loop - UNE Zone 3 | | 3 | UEPDC | USLDC | 206.74 | | | | | | | | | | |
| | 4-Wire DS1 Digital Loop - UNE Zone 4 | | 4 | UEPDC | USLDC | 458.46 | | | | | | | | | | |
| **UNE Port Rate** | | | | | | | | | | | | | | | | |
| | 4-Wire DDITS Digital Trunk Port (E:4/1/2004) | | | UEPDC | UDD1T | 52.70 | 457.12 | 254.70 | 120.96 | 14.61 | | | | | | |
| **NONRECURRING CHARGES - CURRENTLY COMBINED** | | | | | | | | | | | | | | | | |
| | 4-Wire DS1 Digital Loop / 4-Wire DDITS Trunk Port Combination - Switch-as-Is (E:4/1/2004) | | | UEPDC | USAC4 | | 130.24 | 67.41 | | | | | | | | |
| | 4-Wire DS1 Digital Loop / 4-Wire DDITS Trunk Port Combination - Conversion with DS1 Changes (E:4/1/2004) | | | UEPDC | USAWA | | 130.24 | 67.41 | | | | | | | | |
| | 4-Wire DS1 Digital Loop / 4-Wire DDITS Trunk Port Combination - Conversion with Change - Trunk (E:4/1/2004) | | | UEPDC | USAWB | | 130.24 | 67.41 | | | | | | | | |
| **ADDITIONAL NRCs** | | | | | | | | | | | | | | | | |
| | 4-Wire DS1 Loop / 4-Wire DDITS Trunk Port - NRC - Subsequent Channel Activation/Chan - 2-Way Trunk | | | UEPDC | UDTTA | | 14.56 | 14.56 | | | | | | | | |
| | 4-Wire DS1 Loop / 4-Wire DDITS Trunk Port - Subsequent Channel Activation/Chan - 1-Way Outward Trunk | | | UEPDC | UDTTB | | 14.56 | 14.56 | | | | | | | | |
| | 4-Wire DS1 Loop / 4-Wire DDITS Trunk Port - Subsqnt Channel Activation/Chan Inward Trunk w/out DID | | | UEPDC | UDTTC | | 14.56 | 14.56 | | | | | | | | |
| | 4-Wire DS1 Loop / 4-Wire DDITS Trunk Port - Subsqnt Chan Activation Per Chan - Inward Trunk with DID | | | UEPDC | UDTTD | | 14.56 | 14.56 | | | | | | | | |
| | 4-Wire DS1 Loop / 4-Wire DDITS Trunk Port - Subsqnt Chan Activation / Chan - 2-Way DID w User Trans | | | UEPDC | UDTTE | | 14.56 | 14.56 | | | | | | | | |
| **BIPOLAR 8 ZERO SUBSTITUTION** | | | | | | | | | | | | | | | | |
| | B8ZS -Superframe Format | | | UEPDC | CCOSF | | 0.00i | 600.00s | | | | | | | | |
| | B8ZS - Extended Superframe Format | | | UEPDC | CCOEF | | 0.00i | 600.00s | | | | | | | | |
| **Alternate Mark Inversion** | | | | | | | | | | | | | | | | |
| | AMI -Superframe Format | | | UEPDC | MCOSF | | 0.00 | 0.00 | | | | | | | | |
| | AMI - Extended SuperFrame Format | | | UEPDC | MCOPO | | 0.00 | 0.00 | | | | | | | | |
| **Telephone Number/Trunk Group Establisment Charges** | | | | | | | | | | | | | | | | |
| | Telephone Number for 2-Way Trunk Group | | | UEPDC | UDTGX | 0.00 | | | | | | | | | | |
| | Telephone Number for 1-Way Outward Trunk Group | | | UEPDC | UDTGY | 0.00 | | | | | | | | | | |
| | Telephone Number for 1-Way Inward Trunk Group Without DID | | | UEPDC | UDTGZ | 0.00 | | | | | | | | | | |
| | DID Numbers for each Group of 20 DID Numbers | | | UEPDC | ND4 | 0.00 | | | | | | | | | | |
| | DID Numbers, Non- consecutive DID Numbers , Per Number | | | UEPDC | ND5 | 0.00 | | | | | | | | | | |
| | Reserve Non-Consecutive DID Nos. | | | UEPDC | ND6 | 0.00 | 0.00 | 0.00 | | | | | | | | |
| | Reserve DID Numbers | | | UEPDC | NDV | 0.00 | 0.00 | 0.00 | | | | | | | | |
| **Dedicated DS1 (Interoffice Channel Mileage) - FX/FCO for 4-Wire DS1 Digital Loop with 4-Wire DDITS Trunk Port** | | | | | | | | | | | | | | | | |
| | Interoffice Channel Mileage - Fixed rate 0-8 miles (Facilities Termination) | | | UEPDC | 1LNO1 | 57.33 | 89.79 | 82.28 | 16.86 | 14.90 | | | | | | |
| | Interoffice Channel Mileage - Additional rate per mile - 0-8 miles | | | UEPDC | 1LNOA | 0.20 | 0.00 | 0.00 | | | | | | | | |
| | Interoffice Channel Mileage - Fixed rate 9-25 miles (Facilities Termination) | | | UEPDC | 1LNO2 | 0.00 | 0.00 | 0.00 | | | | | | | | |
| | Interoffice Channel Mileage - Additional rate per mile - 9-25 miles | | | UEPDC | 1LNOB | 0.20 | 0.00 | 0.00 | | | | | | | | |
| | Interoffice Channel Mileage - Fixed rate 25+ miles (Facilities Termination) | | | UEPDC | 1LNO3 | 0.00 | 0.00 | 0.00 | 0.00 | | | | | | | |
| | Interoffice Channel Mileage - Additional rate per mile - 25+ miles | | | UEPDC | 1LNOC | 0.20 | 0.00 | 0.00 | | | | | | | | |
| | Local Number Portability, per DS0 Activated | | | UEPDC | LNPCP | 3.15 | 0.00 | 0.00 | 0.00 | | | | | | | |
| | Central Office Termininating Point | | | UEPDC | CTG | 0.00 | | | | | | | | | | |
| **4-WIRE DS1 LOOP WITH CHANNELIZATION WITH PORT** | | | | | | | | | | | | | | | | |
| **System is 1 DS1 Loop, 1 D4 Channel Bank, and up to 24 Feature Activations** | | | | | | | | | | | | | | | | |

| UNBUNDLED NETWORK ELEMENTS - Mississippi | | | | | | | | | | | | | Attachment: 2 | | Exhibit: A | |
|---|---|---|---|---|---|---|---|---|---|---|---|---|---|---|---|---|
| CATEGORY | RATE ELEMENTS | Interim | Zone | BCS | USOC | RATES ($) | | | | | Svc Order Submitted Elec per LSR | Svc Order Submitted Manually per LSR | Incremental Charge - Manual Svc Order vs. Electronic-1st | Incremental Charge - Manual Svc Order vs. Electronic-Add'l | Incremental Charge - Manual Svc Order vs. Electronic-Disc 1st | Incremental Charge - Manual Svc Order vs. Electronic-Disc Add'l |
| | | | | | | Rec | Nonrecurring | | Nonrecurring Disconnect | | OSS Rates ($) | | | | | |
| | | | | | | | First | Add'l | First | Add'l | SOMEC | SOMAN | SOMAN | SOMAN | SOMAN | SOMAN |
| | Each System can have up to 24 combinations of rates depending on type and number of ports used | | | | | | | | | | | | | | | |
| | The UNE-P DS1 combination rates below for 4-Wire DS1 Loop with Channelization with Port in this rate exhibit apply to the embedded base in place as of 10/2/03 until 4/1/04. After 4/1/04 these rates shall revert to tariff rates or a separate agreement. | | | | | | | | | | | | | | | |
| | Requests for 4-Wire DS1 Loop with Channelization with Port after the effective date of this amendment shall be provided pursuant to a separate agreement or tariff at BellSouth's discretion. | | | | | | | | | | | | | | | |
| | UNE DS1 Loop | | | | | | | | | | | | | | | |
| | 4-Wire DS1 Loop - UNE Zone 1 | | 1 | UEPMG | USLDC | 79.08 | 0.00 | 0.00 | | | | | | | | |
| | 4-Wire DS1 Loop - UNE Zone 2 | | 2 | UEPMG | USLDC | 129.38 | 0.00 | 0.00 | | | | | | | | |
| | 4-Wire DS1 Loop - UNE Zone 3 | | 3 | UEPMG | USLDC | 206.74 | 0.00 | 0.00 | | | | | | | | |
| | 4-Wire DS1 Loop - UNE Zone 4 | | 4 | UEPMG | USLDC | 458.46 | 0.00 | 0.00 | | | | | | | | |
| | UNE DSO Channelization Capacities (D4 Channel Bank Configurations) | | | | | | | | | | | | | | | |
| | 24 DSO Channel Capacity - 1 per DS1 | | | UEPMG | VUM24 | 95.06 | 0.00 | 0.00 | | | | | | | | |
| | 48 DSO Channel Capacity - 1 per 2 DS1s | | | UEPMG | VUM48 | 190.12 | 0.00 | 0.00 | | | | | | | | |
| | 96 DSO Channel Capacity -1per 4 DS1s | | | UEPMG | VUM96 | 380.24 | 0.00 | 0.00 | | | | | | | | |
| | 144 DS0 Channel Capacity - 1 per 6 DS1s | | | UEPMG | VUM14 | 570.36 | 0.00 | 0.00 | | | | | | | | |
| | 192 DS0 Channel Capacity -1 per 8 DS1s | | | UEPMG | VUM19 | 760.48 | 0.00 | 0.00 | | | | | | | | |
| | 240 DS0 Channel Capacity - 1 per 10 DS1s | | | UEPMG | VUM2O | 950.60 | 0.00 | 0.00 | | | | | | | | |
| | 288 DS0 Channel Capacity - 1 per 12 DS1s | | | UEPMG | VUM28 | 1,140.72 | 0.00 | 0.00 | | | | | | | | |
| | 384 DS0 Channel Capacity - 1 per 16 DS1s | | | UEPMG | VUM38 | 1,520.96 | 0.00 | 0.00 | | | | | | | | |
| | 480 DS0 Channel Capacity - 1 per 20 DS1s | | | UEPMG | VUM4O | 1,901.20 | 0.00 | 0.00 | | | | | | | | |
| | 576 DS0 Channel Capacity -1 per 24 DS1s | | | UEPMG | VUM57 | 2,281.44 | 0.00 | 0.00 | | | | | | | | |
| | 672 DS0 Channel Capacity - 1 per 28 DS1s | | | UEPMG | VUM67 | 2,661.68 | 0.00 | 0.00 | | | | | | | | |
| | Non-Recurring Charges (NRC) Associated with 4-Wire DS1 Loop with Channeliztion with Port - Conversion Charge Based on a System | | | | | | | | | | | | | | | |
| | A Minimum System configuration is One (1) DS1, One (1) D4 Channel Bank, and Up To 24 DSO Ports with Feature Activations. | | | | | | | | | | | | | | | |
| | Multiples of this configuration functioning as one are considered Add'l after the minimum system configuration is counted. | | | | | | | | | | | | | | | |
| | NRC - Conversion (Currently Combined) with or without BellSouth Allowed Changes | | | UEPMG | USAC4 | 0.00 | 151.35 | 8.41 | | | | | | | | |
| | System Additions at End User Locations Where 4-Wire DS1 Loop with Channelization with Port Combination Currently Exists and | | | | | | | | | | | | | | | |
| | New (Not Currently Combined) in all states, except in Density Zone 1 of Top 8 MSA's | | | | | | | | | | | | | | | |
| | 1 DS1/D4 Channel Bank - Additionally Add NRC for each Port and Assoc Fea Activation (E:4/1/2004) | | | UEPMG | VUMD4 | 0.00 | 715.15 | 327.39 | 148.05 | 17.56 | | | | | | |
| | Bipolar 8 Zero Substitution | | | | | | | | | | | | | | | |
| | Clear Channel Capability Format, superframe - Subsequent Activity Only | | | UEPMG | CCOSF | 0.00 | 0.00i | 600.00s | | | | | | | | |
| | Clear Channel Capability Format - Extended Superframe - Subsequent Activity Only | | | UEPMG | CCOEF | 0.00 | 0.00i | 600.00s | | | | | | | | |
| | Alternate Mark Inversion (AMI) | | | | | | | | | | | | | | | |
| | Superframe Format | | | UEPMG | MCOSF | 0.00 | 0.00 | 0.00 | | | | | | | | |
| | Extended Superframe Format | | | UEPMG | MCOPO | 0.00 | 0.00 | 0.00 | | | | | | | | |
| | Exchange Ports Associated with 4-Wire DS1 Loop with Channelization with Port | | | | | | | | | | | | | | | |
| | Exchange Ports | | | | | | | | | | | | | | | |
| | Line Side Combination Channelized PBX Trunk Port - Business (E:4/1/2004) | | | UEPPX | UEPCX | 1.23 | 0.00 | 0.00 | 0.00 | 0.00 | | | | | | |
| | Line Side Outward Channelized PBX Trunk Port - Business (E:4/1/2004) | | | UEPPX | UEPOX | 1.23 | 0.00 | 0.00 | 0.00 | 0.00 | | | | | | |
| | Line Side Inward Only Channelized PBX Trunk Port without DID (E:4/1/2004) | | | UEPPX | UEP1X | 1.23 | 0.00 | 0.00 | 0.00 | 0.00 | | | | | | |
| | 2-Wire Trunk Side Unbundled Channelized DID Trunk Port (E:4/1/2004) | | | UEPPX | UEPDM | 7.40 | 0.00 | 0.00 | 0.00 | 0.00 | | | | | | |
| | Unbundled Exchange Ports, 2-Wire Channelized – Outdial – (AL, KY, LA, MS, & TN)(Conversion from Network Access Service) (E:4/1/2004) | | | UEPPX | UEPCY | 1.23 | 0.00 | 0.00 | 0.00 | 0.00 | | | | | | |
| | Unbundled Exchange Ports, 2-Wire Channelized – Combination (AL, KY, LA, MS, & TN) (Conversion from Network Access Service) (E:4/1/2004) | | | UEPPX | UEPCT | 1.23 | 0.00 | 0.00 | 0.00 | 0.00 | | | | | | |
| | Unbundled Exchange Ports, 2-Wire Channelized – Outdial– Mississippi Only – Calling Plan (E:4/1/2004) | | | UEPPX | UEPC4 | 1.23 | 0.00 | 0.00 | 0.00 | 0.00 | | | | | | |
| | Unbundled Exchange Ports, 2-Wire Channelized – Two Way - Mississippi Only – Calling Plan (E:4/1/2004) | | | UEPPX | UEPC7 | 1.23 | 0.00 | 0.00 | 0.00 | 0.00 | | | | | | |
| | Feature Activations - Unbundled Loop Concentration | | | | | | | | | | | | | | | |

| UNBUNDLED NETWORK ELEMENTS - Mississippi | | | | | | | | | | | | | | Attachment: 2 | | Exhibit: A | |
|---|---|---|---|---|---|---|---|---|---|---|---|---|---|---|---|---|---|
| CATEGORY | RATE ELEMENTS | Interl m | Zone | BCS | USOC | RATES ($) | | | | | Svc Order Submitted Elec per LSR | Svc Order Submitted Manually per LSR | Incremental Charge - Manual Svc Order vs. Electronic-1st | Incremental Charge - Manual Svc Order vs. Electronic-Add'l | Incremental Charge - Manual Svc Order vs. Electronic-Disc 1st | Incremental Charge - Manual Svc Order vs. Electronic-Disc Add'l |
| | | | | | | Rec | Nonrecurring | | Nonrecurring Disconnect | | OSS Rates ($) | | | | | |
| | | | | | | | First | Add'l | First | Add'l | SOMEC | SOMAN | SOMAN | SOMAN | SOMAN | SOMAN |
| | Feature (Service) Activation for each Line Port Terminated in D4 Bank | | | UEPPX | 1PQWM | 0.61 | 25.36 | 13.39 | 4.29 | 4.26 | | | | | | |
| | Feature (Service) Activation for each Trunk Port Terminated in D4 Bank | | | UEPPX | 1PQWU | 0.61 | 78.03 | 18.39 | 60.66 | 11.85 | | | | | | |
| | **Telephone Number/ Group Establishment Charges for DID Service** | | | | | | | | | | | | | | | |
| | DID Trunk Termination (1 per Port) | | | UEPPX | NDT | 0.00 | 0.00 | 0.00 | | | | | | | | |
| | DID Numbers - groups of 20 - Valid all States | | | UEPPX | ND4 | 0.00 | 0.00 | 0.00 | | | | | | | | |
| | Non-Consecutive DID Numbers - per number | | | UEPPX | ND5 | 0.00 | 0.00 | 0.00 | | | | | | | | |
| | Reserve Non-Consecutive DID Numbers | | | UEPPX | ND6 | 0.00 | 0.00 | 0.00 | | | | | | | | |
| | Reserve DID Numbers | | | UEPPX | NDV | 0.00 | 0.00 | 0.00 | | | | | | | | |
| | **Local Number Portability** | | | | | | | | | | | | | | | |
| | Local Number Portability - 1 per port | | | UEPPX | LNPCP | 3.15 | 0.00 | 0.00 | | | | | | | | |
| | **FEATURES - Vertical and Optional** | | | | | | | | | | | | | | | |
| | **Local Switching Features Offered with Line Side Ports Only** | | | | | | | | | | | | | | | |
| | All Features Available | | | UEPPX | UEPVF | 2.56 | 0.00 | 0.00 | | | | | | | | |
| **UNBUNDLED CENTREX PORT/LOOP COMBINATIONS - COST BASED RATES** | | | | | | | | | | | | | | | | |
| | **1. Cost Based Rates are applied where BellSouth is required by FCC and/or State Commission rule to provide Unbundled Local Switching or Switch Ports.** | | | | | | | | | | | | | | | |
| | **2. Features shall apply to the Unbundled Port/Loop Combination - Cost Based Rate section in the same manner as they are applied to the Stand-Alone Unbundled Port section of this Rate Exhibit.** | | | | | | | | | | | | | | | |
| | **3. End Office and Tandem Switching Usage and Common Transport Usage rates in the Port section of this rate exhibit shall apply to all combinations of loop/port network elements except for UNE Coin Port/Loop Combinations.** | | | | | | | | | | | | | | | |
| | **4. The first and additional Port nonrecurring charges apply to Not Currently Combined Combos. For Currently Combined Combos, the nonrecurring charges shall be those identified in the Nonrecurring - Currently Combined sections. Additional NRCs may apply also and are categorized accordingly.** | | | | | | | | | | | | | | | |
| | **5. Market Rates for Unbundled Centrex Port/Loop Combination will be negotiated on an Individual Case Basis, until further notice.** | | | | | | | | | | | | | | | |
| | **UNE-P CENTREX - 1AESS - (Valid in AL,FL,GA,KY,LA,MS,&TN only)** | | | | | | | | | | | | | | | |
| | **2-Wire VG Loop/2-Wire Voice Grade Port (Centrex) Combo** | | | | | | | | | | | | | | | |
| | **UNE Port/Loop Combination Rates (Non-Design)** | | | | | | | | | | | | | | | |
| | 2-Wire VG Loop/2-Wire Voice Grade Port (Centrex) Port Combo - Non-Design | | 1 | UEP91 | | 12.22 | | | | | | | | | | |
| | 2-Wire VG Loop/2-Wire Voice Grade Port (Centrex)Port Combo - Non-Design | | 2 | UEP91 | | 17.13 | | | | | | | | | | |
| | 2-Wire VG Loop/2-Wire Voice Grade Port (Centrex)Port Combo - Non-Design | | 3 | UEP91 | | 26.26 | | | | | | | | | | |
| | 2-Wire VG Loop/2-Wire Voice Grade Port (Centrex) Port Combo - Non-Design | | 4 | UEP91 | | 44.91 | | | | | | | | | | |
| | **UNE Port/Loop Combination Rates (Design)** | | | | | | | | | | | | | | | |
| | 2-Wire VG Loop/2-Wire Voice Grade Port (Centrex) Port Combo - Design | | 1 | UEP91 | | 15.12 | | | | | | | | | | |
| | 2-Wire VG Loop/2-Wire Voice Grade Port (Centrex)Port Combo - Design | | 2 | UEP91 | | 19.98 | | | | | | | | | | |
| | 2-Wire VG Loop/2-Wire Voice Grade Port (Centrex)Port Combo - Design | | 3 | UEP91 | | 28.78 | | | | | | | | | | |
| | 2-Wire VG Loop/2-Wire Voice Grade Port (Centrex) Port Combo - Design | | 4 | UEP91 | | 46.95 | | | | | | | | | | |
| | **UNE Loop Rate** | | | | | | | | | | | | | | | |
| | 2-Wire Voice Grade Loop (SL 1) - Zone 1 | | 1 | UEP91 | UECS1 | 10.98 | | | | | | | | | | |
| | 2-Wire Voice Grade Loop (SL 1) - Zone 2 | | 2 | UEP91 | UECS1 | 15.91 | | | | | | | | | | |
| | 2-Wire Voice Grade Loop (SL 1) - Zone 3 | | 3 | UEP91 | UECS1 | 25.04 | | | | | | | | | | |
| | 2-Wire Voice Grade Loop (SL 1) - Zone 4 | | 4 | UEP91 | UECS1 | 43.68 | | | | | | | | | | |
| | 2-Wire Voice Grade Loop (SL 2) - Zone 1 | | 1 | UEP91 | UECS2 | 13.89 | | | | | | | | | | |
| | 2-Wire Voice Grade Loop (SL 2) - Zone 2 | | 2 | UEP91 | UECS2 | 18.75 | | | | | | | | | | |
| | 2-Wire Voice Grade Loop (SL 2) - Zone 3 | | 3 | UEP91 | UECS2 | 27.55 | | | | | | | | | | |
| | 2-Wire Voice Grade Loop (SL 2) - Zone 4 | | 4 | UEP91 | UECS2 | 45.72 | | | | | | | | | | |
| | **UNE Ports** | | | | | | | | | | | | | | | |
| | **All States (Except North Carolina and Sout Carolina)** | | | | | | | | | | | | | | | |
| | 2-Wire Voice Grade Port (Centrex ) Basic Local Area | | | UEP91 | UEPYA | 1.23 | 40.31 | 19.84 | 24.90 | 6.58 | | | | | | |
| | 2-Wire Voice Grade Port (Centrex 800 termination)Basic Local Area | | | UEP91 | UEPYB | 1.23 | 40.31 | 19.84 | 24.90 | 6.58 | | | | | | |
| | 2-Wire Voice Grade Port (Centrex with Caller ID)Note1 Basic Local Area | | | UEP91 | UEPYH | 1.23 | 40.31 | 19.84 | 24.90 | 6.58 | | | | | | |

## UNBUNDLED NETWORK ELEMENTS - Mississippi

| CATEGORY | RATE ELEMENTS | Interim | Zone | BCS | USOC | RATES ($) | | | | | Svc Order Submitted Elec per LSR | Svc Order Submitted Manually per LSR | Attachment: 2 Incremental Charge - Manual Svc Order vs. Electronic- 1st | Attachment: 2 Incremental Charge - Manual Svc Order vs. Electronic- Add'l | Exhibit: A Incremental Charge - Manual Svc Order vs. Electronic- Disc 1st | Exhibit: A Incremental Charge - Manual Svc Order vs. Electronic- Disc Add'l |
|---|---|---|---|---|---|---|---|---|---|---|---|---|---|---|---|---|
| | | | | | | Rec | Nonrecurring | | Nonrecurring Disconnect | | OSS Rates ($) | | | | | |
| | | | | | | | First | Add'l | First | Add'l | SOMEC | SOMAN | SOMAN | SOMAN | SOMAN | SOMAN |
| | 2-Wire Voice Grade Port (Centrex from diff Serving Wire Center) Note 2, 3 Basic Local Area | | | UEP91 | UEPYM | 1.23 | 108.35 | 70.57 | 54.24 | 11.70 | | | | | | |
| | 2-Wire Voice Grade Port, Diff Serving Wire Center - 800 Service Term - Basic Local Area | | | UEP91 | UEPYZ | 1.23 | 108.35 | 70.57 | 54.24 | 11.70 | | | | | | |
| | 2-Wire Voice Grade Port terminated in on Megalink or equivalent - Basic Local Area | | | UEP91 | UEPY9 | 1.23 | 40.31 | 19.84 | 24.90 | 6.58 | | | | | | |
| | 2-Wire Voice Grade Port Terminated on 800 Service Term - Basic Local Area | | | UEP91 | UEPY2 | 1.23 | 40.31 | 19.84 | 24.90 | 6.58 | | | | | | |
| **AL, KY, LA, MS, & TN Only** | | | | | | | | | | | | | | | | |
| | 2-Wire Voice Grade Port (Centrex ) | | | UEP91 | UEPQA | 1.23 | 40.31 | 19.84 | 24.90 | 6.58 | | | | | | |
| | 2-Wire Voice Grade Port (Centrex 800 termination) | | | UEP91 | UEPQB | 1.23 | 40.31 | 19.84 | 24.90 | 6.58 | | | | | | |
| | 2-Wire Voice Grade Port (Centrex with Caller ID)1 | | | UEP91 | UEPQH | 1.23 | 40.31 | 19.84 | 24.90 | 6.58 | | | | | | |
| | 2-Wire Voice Grade Port (Centrex from diff Serving Wire Center)2,3 | | | UEP91 | UEPQM | 1.23 | 108.35 | 70.57 | 54.24 | 11.70 | | | | | | |
| | 2-Wire Voice Grade Port, Diff Serving Wire Center - 2,3 - 800 Service Term | | | UEP91 | UEPQZ | 1.23 | 108.35 | 70.57 | 54.24 | 11.70 | | | | | | |
| | 2-Wire Voice Grade Port terminated in on Megalink or equivalent | | | UEP91 | UEPQ9 | 1.23 | 40.31 | 19.84 | 24.90 | 6.58 | | | | | | |
| | 2-Wire Voice Grade Port Terminated on 800 Service Term | | | UEP91 | UEPQ2 | 1.23 | 40.31 | 19.84 | 24.90 | 6.58 | | | | | | |
| **Local Switching** | | | | | | | | | | | | | | | | |
| | Centrex Intercom Funtionality, per port | | | UEP91 | URECS | 0.7947 | | | | | | | | | | |
| **Local Number Portability** | | | | | | | | | | | | | | | | |
| | Local Number Portability (1 per port) | | | UEP91 | LNPCC | 0.35 | | | | | | | | | | |
| **Features** | | | | | | | | | | | | | | | | |
| | All Standard Features Offered, per port | | | UEP91 | UEPVF | 2.56 | | | | | | | | | | |
| | All Select Features Offered, per port | | | UEP91 | UEPVS | 0.00 | 404.98 | | | | | | | | | |
| | All Centrex Control Features Offered, per port | | | UEP91 | UEPVC | 2.56 | | | | | | | | | | |
| **NARS** | | | | | | | | | | | | | | | | |
| | Unbundled Network Access Register - Combination | | | UEP91 | UARCX | 0.00 | 0.00 | 0.00 | 0.00 | 0.00 | | | | | | |
| | Unbundled Network Access Register - Indial | | | UEP91 | UAR1X | 0.00 | 0.00 | 0.00 | 0.00 | 0.00 | | | | | | |
| | Unbundled Network Access Register - Outdial | | | UEP91 | UAROX | 0.00 | 0.00 | 0.00 | 0.00 | 0.00 | | | | | | |
| **Miscellaneous Terminations** | | | | | | | | | | | | | | | | |
| **2-Wire Trunk Side** | | | | | | | | | | | | | | | | |
| | Trunk Side Terminations, each | | | UEP91 | CENA6 | 8.25 | 120.00 | 18.85 | 61.77 | 3.88 | | | | | | |
| **Interoffice Channel Mileage - 2-Wire** | | | | | | | | | | | | | | | | |
| | Interoffice Channel Facilities Termination - Voice Grade | | | UEP91 | M1GBC | 22.52 | 40.77 | 27.57 | 17.26 | 7.11 | | | | | | |
| | Interoffice Channel mileage, per mile or fraction of mile | | | UEP91 | M1GBM | 0.0098 | | | | | | | | | | |
| **Feature Activations (DS0) Centrex Loops on Channelized DS1 Service** | | | | | | | | | | | | | | | | |
| **D4 Channel Bank Feature Activations** | | | | | | | | | | | | | | | | |
| | Feature Activation on D-4 Channel Bank Centrex Loop Slot | | | UEP91 | 1PQWS | 0.57 | | | | | | | | | | |
| | Feature Activation on D-4 Channel Bank FX line Side Loop Slot | | | UEP91 | 1PQW6 | 0.57 | | | | | | | | | | |
| | Feature Activation on D-4 Channel Bank FX Trunk Side Loop Slot | | | UEP91 | 1PQW7 | 0.57 | | | | | | | | | | |
| | Feature Activation on D-4 Channel Bank Centrex Loop Slot - Different Wire Center | | | UEP91 | 1PQWP | 0.57 | | | | | | | | | | |
| | Feature Activation on D-4 Channel Bank Private Line Loop Slot | | | UEP91 | 1PQWV | 0.57 | | | | | | | | | | |
| | Feature Activation on D-4 Channel Bank Tjie Line/Trunk Loop Slot | | | UEP91 | 1PQWQ | 0.57 | | | | | | | | | | |
| | Feature Activation on D-4 Channel Bank WATS Loop Slot | | | UEP91 | 1PQWA | 0.57 | | | | | | | | | | |
| **Non-Recurring Charges (NRC) Associated with UNE-P Centrex** | | | | | | | | | | | | | | | | |
| | Conversion - Currently Combined Switch-As-Is with allowed changes, per port | | | UEP91 | USAC2 | | 0.10 | 0.10 | | | | | | | | |
| | Conversion of Existing Centrex Common Block | | | UEP91 | USACN | | 37.97 | 16.68 | | | | | | | | |
| | New Centrex Standard Common Block | | | UEP91 | M1ACS | 0.00 | 666.32 | | | | | | | | | |
| | New Centrex Customized Common Block | | | UEP91 | M1ACC | 0.00 | 666.32 | | | | | | | | | |
| | Secondary Block, per Block | | | UEP91 | M2CC1 | 0.00 | 77.91 | | | | | | | | | |
| | NAR Establishment Charge, Per Occasion | | | UEP91 | URECA | 0.00 | 72.63 | | | | | | | | | |

| UNBUNDLED NETWORK ELEMENTS - Mississippi | | | | | | | | | | | | | Attachment: 2 | | Exhibit: A | |
|---|---|---|---|---|---|---|---|---|---|---|---|---|---|---|---|---|
| CATEGORY | RATE ELEMENTS | Interim | Zone | BCS | USOC | RATES ($) | | | | | Svc Order Submitted Elec per LSR | Svc Order Submitted Manually per LSR | Incremental Charge - Manual Svc Order vs. Electronic-1st | Incremental Charge - Manual Svc Order vs. Electronic-Add'l | Incremental Charge - Manual Svc Order vs. Electronic-Disc 1st | Incremental Charge - Manual Svc Order vs. Electronic-Disc Add'l |
| | | | | | | Rec | Nonrecurring | | Nonrecurring Disconnect | | OSS Rates ($) | | | | | |
| | | | | | | | First | Add'l | First | Add'l | SOMEC | SOMAN | SOMAN | SOMAN | SOMAN | SOMAN |
| Additional Non-Recurring Charges (NRC) | | | | | | | | | | | | | | | | |
| | Unbundled Miscellaneous Rate Element, Tag Loop at End Use Premise | | | UEP91 | URETL | | 8.33 | 0.83 | | | | | | | | |
| | Unbundled Miscellaneous Rate Element, Tag Design Loop at End Use Premise | | | UEP91 | URETN | | 11.19 | 1.10 | | | | | | | | |
| UNE-P CENTREX - 5ESS (Valid In All States) | | | | | | | | | | | | | | | | |
| 2-Wire VG Loop/2-Wire Voice Grade Port (Centrex) Combo | | | | | | | | | | | | | | | | |
| UNE Port/Loop Combination Rates (Non-Design) | | | | | | | | | | | | | | | | |
| | 2-Wire VG Loop/2-Wire Voice Grade Port (Centrex) Port Combo - Non-Design | | 1 | UEP95 | | 12.22 | | | | | | | | | | |
| | 2-Wire VG Loop/2-Wire Voice Grade Port (Centrex)Port Combo - Non-Design | | 2 | UEP95 | | 17.13 | | | | | | | | | | |
| | 2-Wire VG Loop/2-Wire Voice Grade Port (Centrex)Port Combo - Non-Design | | 3 | UEP95 | | 26.26 | | | | | | | | | | |
| | 2-Wire VG Loop/2-Wire Voice Grade Port (Centrex) Port Combo - Non-Design | | 4 | UEP95 | | 44.91 | | | | | | | | | | |
| UNE Port/Loop Combination Rates (Design) | | | | | | | | | | | | | | | | |
| | 2-Wire VG Loop/2-Wire Voice Grade Port (Centrex) Port Combo - Design | | 1 | UEP95 | | 15.12 | | | | | | | | | | |
| | 2-Wire VG Loop/2-Wire Voice Grade Port (Centrex)Port Combo - Design | | 2 | UEP95 | | 19.98 | | | | | | | | | | |
| | 2-Wire VG Loop/2-Wire Voice Grade Port (Centrex)Port Combo - Design | | 3 | UEP95 | | 28.78 | | | | | | | | | | |
| | 2-Wire VG Loop/2-Wire Voice Grade Port (Centrex) Port Combo - Design | | 4 | UEP95 | | 46.95 | | | | | | | | | | |
| UNE Loop Rate | | | | | | | | | | | | | | | | |
| | 2-Wire Voice Grade Loop (SL 1) - Zone 1 | | 1 | UEP95 | UECS1 | 10.98 | | | | | | | | | | |
| | 2-Wire Voice Grade Loop (SL 1) - Zone 2 | | 2 | UEP95 | UECS1 | 15.91 | | | | | | | | | | |
| | 2-Wire Voice Grade Loop (SL 1) - Zone 3 | | 3 | UEP95 | UECS1 | 25.04 | | | | | | | | | | |
| | 2-Wire Voice Grade Loop (SL 1) - Zone 4 | | 4 | UEP95 | UECS1 | 43.68 | | | | | | | | | | |
| | 2-Wire Voice Grade Loop (SL 2) - Zone 1 | | 1 | UEP95 | UECS2 | 13.89 | | | | | | | | | | |
| | 2-Wire Voice Grade Loop (SL 2) - Zone 2 | | 2 | UEP95 | UECS2 | 18.75 | | | | | | | | | | |
| | 2-Wire Voice Grade Loop (SL 2) - Zone 3 | | 3 | UEP95 | UECS2 | 27.55 | | | | | | | | | | |
| | 2-Wire Voice Grade Loop (SL 2) - Zone 4 | | 4 | UEP95 | UECS2 | 45.72 | | | | | | | | | | |
| UNE Port Rate | | | | | | | | | | | | | | | | |
| All States | | | | | | | | | | | | | | | | |
| | 2-Wire Voice Grade Port (Centrex ) Basic Local Area | | | UEP95 | UEPYA | 1.23 | 40.31 | 19.84 | 24.90 | 6.58 | | | | | | |
| | 2-Wire Voice Grade Port (Centrex 800 termination) | | | UEP95 | UEPYB | 1.23 | 40.31 | 19.84 | 24.90 | 6.58 | | | | | | |
| | 2-Wire Voice Grade Port (Centrex with Caller ID)1Basic Local Area | | | UEP95 | UEPYH | 1.23 | 40.31 | 19.84 | 24.90 | 6.58 | | | | | | |
| | 2-Wire Voice Grade Port (Centrex from diff Serving Wire Center)2,3 Basic Local Area | | | UEP95 | UEPYM | 1.23 | 108.35 | 70.57 | 54.24 | 11.70 | | | | | | |
| | 2-Wire Voice Grade Port, Diff Serving Wire Center 2,3 - 800 Service Term - Basic Local Area | | | UEP95 | UEPYZ | 1.23 | 108.35 | 70.57 | 54.24 | 11.70 | | | | | | |
| | 2-Wire Voice Grade Port terminated in on Megalink or equivalent - Basic Local Area | | | UEP95 | UEPY9 | 1.23 | 40.31 | 19.84 | 24.90 | 6.58 | | | | | | |
| | 2-Wire Voice Grade Port Terminated on 800 Service Term - Basic Local Area | | | UEP95 | UEPY2 | 1.23 | 40.31 | 19.84 | 24.90 | 6.58 | | | | | | |
| AL, KY, LA, MS, SC, & TN Only | | | | | | | | | | | | | | | | |
| | 2-Wire Voice Grade Port (Centrex ) | | | UEP95 | UEPQA | 1.23 | 40.31 | 19.84 | 24.90 | 6.58 | | | | | | |
| | 2-Wire Voice Grade Port (Centrex 800 termination) | | | UEP95 | UEPQB | 1.23 | 40.31 | 19.84 | 24.90 | 6.58 | | | | | | |
| | 2-Wire Voice Grade Port (Centrex with Caller ID)1 | | | UEP95 | UEPQH | 1.23 | 40.31 | 19.84 | 24.90 | 6.58 | | | | | | |
| | 2-Wire Voice Grade Port (Centrex from diff Serving Wire Center)2,3 | | | UEP95 | UEPQM | 1.23 | 108.35 | 70.57 | 54.24 | 11.70 | | | | | | |
| | 2-Wire Voice Grade Port, Diff Serving Wire Center - 800 Service Term 2,3 | | | UEP95 | UEPQZ | 1.23 | 108.35 | 70.57 | 54.24 | 11.70 | | | | | | |
| | 2-Wire Voice Grade Port terminated in on Megalink or equivalent | | | UEP95 | UEPQ9 | 1.23 | 40.31 | 19.84 | 24.90 | 6.58 | | | | | | |
| | 2-Wire Voice Grade Port Terminated on 800 Service Term | | | UEP95 | UEPQ2 | 1.23 | 40.31 | 19.84 | 24.90 | 6.58 | | | | | | |

## UNBUNDLED NETWORK ELEMENTS - Mississippi

| CATEGORY | RATE ELEMENTS | Interim | Zone | BCS | USOC | RATES ($) | | | | | Svc Order Submitted Elec per LSR | Svc Order Submitted Manually per LSR | Attachment: 2 | | Exhibit: A | |
|---|---|---|---|---|---|---|---|---|---|---|---|---|---|---|---|---|
| | | | | | | | | | | | | | Incremental Charge - Manual Svc Order vs. Electronic-1st | Incremental Charge - Manual Svc Order vs. Electronic-Add'l | Incremental Charge - Manual Svc Order vs. Electronic-Disc 1st | Incremental Charge - Manual Svc Order vs. Electronic-Disc Add'l |
| | | | | | | Rec | Nonrecurring | | Nonrecurring Disconnect | | OSS Rates ($) | | | | | |
| | | | | | | | First | Add'l | First | Add'l | SOMEC | SOMAN | SOMAN | SOMAN | SOMAN | SOMAN |
| FL & GA Only | | | | | | | | | | | | | | | | |
| **Local Switching** | | | | | | | | | | | | | | | | |
| | Centrex Intercom Funtionality, per port | | | UEP95 | URECS | 0.7947 | | | | | | | | | | |
| **Local Number Portability** | | | | | | | | | | | | | | | | |
| | Local Number Portability (1 per port) | | | UEP95 | LNPCC | 0.35 | | | | | | | | | | |
| **Features** | | | | | | | | | | | | | | | | |
| | All Standard Features Offered, per port | | | UEP95 | UEPVF | 2.56 | | | | | | | | | | |
| | All Select Features Offered, per port | | | UEP95 | UEPVS | 0.00 | 404.98 | | | | | | | | | |
| | All Centrex Control Features Offered, per port | | | UEP95 | UEPVC | 2.56 | | | | | | | | | | |
| **NARS** | | | | | | | | | | | | | | | | |
| | Unbundled Network Access Register - Combination | | | UEP95 | UARCX | 0.00 | 0.00 | 0.00 | 0.00 | 0.00 | | | | | | |
| | Unbundled Network Access Register - Indial | | | UEP95 | UAR1X | 0.00 | 0.00 | 0.00 | 0.00 | 0.00 | | | | | | |
| | Unbundled Network Access Register - Outdial | | | UEP95 | UAROX | 0.00 | 0.00 | 0.00 | 0.00 | 0.00 | | | | | | |
| **Miscellaneous Terminations** | | | | | | | | | | | | | | | | |
| **2-Wire Trunk Side** | | | | | | | | | | | | | | | | |
| | Trunk Side Terminations, each | | | UEP95 | CEND6 | 8.25 | 120.00 | 18.85 | 61.77 | 3.88 | | | | | | |
| **4-Wire Digital (1.544 Megabits)** | | | | | | | | | | | | | | | | |
| | DS1 Circuit Terminations, each | | | UEP95 | M1HD1 | 58.41 | 203.19 | 96.25 | 74.86 | 2.54 | | | | | | |
| | DS0 Channels Activated, each | | | UEP95 | M1HDO | 0.00 | 14.56 | | | | | | | | | |
| **Interoffice Channel Mileage - 2-Wire** | | | | | | | | | | | | | | | | |
| | Interoffice Channel Facilities Termination | | | UEP95 | M1GBC | 22.52 | 40.77 | 27.57 | 17.26 | 7.11 | | | | | | |
| | Interoffice Channel mileage, per mile or fraction of mile | | | UEP95 | M1GBM | 0.0098 | | | | | | | | | | |
| **Feature Activations (DS0) Centrex Loops on Channelized DS1 Service** | | | | | | | | | | | | | | | | |
| **D4 Channel Bank Feature Activations** | | | | | | | | | | | | | | | | |
| | Feature Activation on D-4 Channel Bank Centrex Loop Slot | | | UEP95 | 1PQWS | 0.57 | | | | | | | | | | |
| | Feature Activation on D-4 Channel Bank FX line Side Loop Slot | | | UEP95 | 1PQW6 | 0.57 | | | | | | | | | | |
| | Feature Activation on D-4 Channel Bank FX Trunk Side Loop Slot | | | UEP95 | 1PQW7 | 0.57 | | | | | | | | | | |
| | Feature Activation on D-4 Channel Bank Centrex Loop Slot - Different Wire Center | | | UEP95 | 1PQWP | 0.57 | | | | | | | | | | |
| | Feature Activation on D-4 Channel Bank Private Line Loop Slot | | | UEP95 | 1PQWV | 0.57 | | | | | | | | | | |
| | Feature Activation on D-4 Channel Bank Tjie Line/Trunk Loop Slot | | | UEP95 | 1PQWQ | 0.57 | | | | | | | | | | |
| | Feature Activation on D-4 Channel Bank WATS Loop Slot | | | UEP95 | 1PQWA | 0.57 | | | | | | | | | | |
| **Non-Recurring Charges (NRC) Associated with UNE-P Centrex** | | | | | | | | | | | | | | | | |
| | NRC Conversion Currently Combined Switch-As-Is with allowed changes, per port | | | UEP95 | USAC2 | | 0.10 | 0.10 | | | | | | | | |
| | Conversion of Existing Centrex Common Block, each | | | UEP95 | USACN | | 37.97 | 16.68 | | | | | | | | |
| | New Centrex Standard Common Block | | | UEP95 | M1ACS | 0.00 | 666.32 | | | | | | | | | |
| | New Centrex Customized Common Block | | | UEP95 | M1ACC | 0.00 | 666.32 | | | | | | | | | |
| | NAR Establishment Charge, Per Occasion | | | UEP95 | URECA | 0.00 | 72.63 | | | | | | | | | |
| **Additional Non-Recurring Charges (NRC)** | | | | | | | | | | | | | | | | |
| | Unbundled Miscellaneous Rate Element, Tag Loop at End Use Premise | | | UEP95 | URETL | | 8.33 | 0.83 | | | | | | | | |
| | Unbundled Miscellaneous Rate Element, Tag Design Loop at End Use Premise | | | UEP95 | URETN | | 11.19 | 1.10 | | | | | | | | |
| **UNE-P CENTREX - DMS100 (Valid in All States)** | | | | | | | | | | | | | | | | |
| **2-Wire VG Loop/2-Wire Voice Grade Port (Centrex) Combo** | | | | | | | | | | | | | | | | |
| **UNE Port/Loop Combination Rates (Non-Design)** | | | | | | | | | | | | | | | | |
| | 2-Wire VG Loop/2-Wire Voice Grade Port (Centrex) Port Combo - Non-Design | | 1 | UEP9D | | 12.22 | | | | | | | | | | |
| | 2-Wire VG Loop/2-Wire Voice Grade Port (Centrex)Port Combo - Non-Design | | 2 | UEP9D | | 17.13 | | | | | | | | | | |
| | 2-Wire VG Loop/2-Wire Voice Grade Port (Centrex)Port Combo - Non-Design | | 3 | UEP9D | | 26.26 | | | | | | | | | | |
| | 2-Wire VG Loop/2-Wire Voice Grade Port (Centrex) Port Combo - Non-Design | | 4 | UEP9D | | 44.91 | | | | | | | | | | |

## UNBUNDLED NETWORK ELEMENTS - Mississippi

| CATEGORY | RATE ELEMENTS | Interim | Zone | BCS | USOC | RATES ($) | | | | | Svc Order Submitted Elec per LSR | Svc Order Submitted Manually per LSR | Attachment: 2 | | Exhibit: A | |
|---|---|---|---|---|---|---|---|---|---|---|---|---|---|---|---|---|
| | | | | | | | | | | | | | Incremental Charge - Manual Svc Order vs. Electronic-1st | Incremental Charge - Manual Svc Order vs. Electronic-Add'l | Incremental Charge - Manual Svc Order vs. Electronic-Disc 1st | Incremental Charge - Manual Svc Order vs. Electronic-Disc Add'l |
| | | | | | | Rec | Nonrecurring | | Nonrecurring Disconnect | | OSS Rates ($) | | | | | |
| | | | | | | | First | Add'l | First | Add'l | SOMEC | SOMAN | SOMAN | SOMAN | SOMAN | SOMAN |
| UNE Port/Loop Combination Rates (Design) | | | | | | | | | | | | | | | | |
| | 2-Wire VG Loop/2-Wire Voice Grade Port (Centrex) Port Combo - Design | | 1 | UEP9D | | 15.12 | | | | | | | | | | |
| | 2-Wire VG Loop/2-Wire Voice Grade Port (Centrex)Port Combo - Design | | 2 | UEP9D | | 19.98 | | | | | | | | | | |
| | 2-Wire VG Loop/2-Wire Voice Grade Port (Centrex)Port Combo - Design | | 3 | UEP9D | | 28.78 | | | | | | | | | | |
| | 2-Wire VG Loop/2-Wire Voice Grade Port (Centrex) Port Combo - Design | | 4 | UEP9D | | 46.95 | | | | | | | | | | |
| UNE Loop Rate | | | | | | | | | | | | | | | | |
| | 2-Wire Voice Grade Loop (SL 1) - Zone 1 | | 1 | UEP9D | UECS1 | 10.98 | | | | | | | | | | |
| | 2-Wire Voice Grade Loop (SL 1) - Zone 2 | | 2 | UEP9D | UECS1 | 15.91 | | | | | | | | | | |
| | 2-Wire Voice Grade Loop (SL 1) - Zone 3 | | 3 | UEP9D | UECS1 | 25.04 | | | | | | | | | | |
| | 2-Wire Voice Grade Loop (SL 1) - Zone 4 | | 4 | UEP9D | UECS1 | 43.68 | | | | | | | | | | |
| | 2-Wire Voice Grade Loop (SL 2) - Zone 1 | | 1 | UEP9D | UECS2 | 13.89 | | | | | | | | | | |
| | 2-Wire Voice Grade Loop (SL 2) - Zone 2 | | 2 | UEP9D | UECS2 | 18.75 | | | | | | | | | | |
| | 2-Wire Voice Grade Loop (SL 2) - Zone 3 | | 3 | UEP9D | UECS2 | 27.55 | | | | | | | | | | |
| | 2-Wire Voice Grade Loop (SL 2) - Zone 4 | | 4 | UEP9D | UECS2 | 45.72 | | | | | | | | | | |
| UNE Port Rate | | | | | | | | | | | | | | | | |
| ALL STATES | | | | | | | | | | | | | | | | |
| | 2-Wire Voice Grade Port (Centrex ) Basic Local Area | | | UEP9D | UEPYA | 1.23 | 40.31 | 19.84 | 24.90 | 6.58 | | | | | | |
| | 2-Wire Voice Grade Port (Centrex 800 termination)Basic Local Area | | | UEP9D | UEPYB | 1.23 | 40.31 | 19.84 | 24.90 | 6.58 | | | | | | |
| | 2-Wire Voice Grade Port (Centrex / EBS-PSET)3Basic Local Area | | | UEP9D | UEPYC | 1.23 | 40.31 | 19.84 | 24.90 | 6.58 | | | | | | |
| | 2-Wire Voice Grade Port (Centrex / EBS-M5009)3Basic Local Area | | | UEP9D | UEPYD | 1.23 | 40.31 | 19.84 | 24.90 | 6.58 | | | | | | |
| | 2-Wire Voice Grade Port (Centrex / EBS-M5209))3 Basic Local Area | | | UEP9D | UEPYE | 1.23 | 40.31 | 19.84 | 24.90 | 6.58 | | | | | | |
| | 2-Wire Voice Grade Port (Centrex / EBS-M5112))3 Basic Local Area | | | UEP9D | UEPYF | 1.23 | 40.31 | 19.84 | 24.90 | 6.58 | | | | | | |
| | 2-Wire Voice Grade Port (Centrex / EBS-M5312))3Basic Local Area | | | UEP9D | UEPYG | 1.23 | 40.31 | 19.84 | 24.90 | 6.58 | | | | | | |
| | 2-Wire Voice Grade Port (Centrex / EBS-M5008))3 Basic Local Area | | | UEP9D | UEPYT | 1.23 | 40.31 | 19.84 | 24.90 | 6.58 | | | | | | |
| | 2-Wire Voice Grade Port (Centrex / EBS-M5208))3 Basic Local Area | | | UEP9D | UEPYU | 1.23 | 40.31 | 19.84 | 24.90 | 6.58 | | | | | | |
| | 2-Wire Voice Grade Port (Centrex / EBS-M5216))3 Basic Local Area | | | UEP9D | UEPYV | 1.23 | 40.31 | 19.84 | 24.90 | 6.58 | | | | | | |
| | 2-Wire Voice Grade Port (Centrex / EBS-M5316))3 Basic Local Area | | | UEP9D | UEPY3 | 1.23 | 40.31 | 19.84 | 24.90 | 6.58 | | | | | | |
| | 2-Wire Voice Grade Port (Centrex with Caller ID) Basic Local Area | | | UEP9D | UEPYH | 1.23 | 40.31 | 19.84 | 24.90 | 6.58 | | | | | | |
| | 2-Wire Voice Grade Port (Centrex/Caller ID/Msg Wtg Lamp Indication))4 Basic Local Area | | | UEP9D | UEPYW | 1.23 | 40.31 | 19.84 | 24.90 | 6.58 | | | | | | |
| | 2-Wire Voice Grade Port (Centrex/Msg Wtg Lamp Indication))4 Basic Local Area | | | UEP9D | UEPYJ | 1.23 | 40.31 | 19.84 | 24.90 | 6.58 | | | | | | |
| | 2-Wire Voice Grade Port (Centrex from diff Serving Wire Center) 2,3-Basic Local Area | | | UEP9D | UEPYM | 1.23 | 108.35 | 70.57 | 54.24 | 11.70 | | | | | | |
| | 2-Wire Voice Grade Port (Centrex/differ SWC /EBS-PSET)2,3,4 Basic Local Area | | | UEP9D | UEPYO | 1.23 | 108.35 | 70.57 | 54.24 | 11.70 | | | | | | |
| | 2-Wire Voice Grade Port (Centrex/differ SWC /EBS-M5009)2,3,4 Basic Local Area | | | UEP9D | UEPYP | 1.23 | 108.35 | 70.57 | 54.24 | 11.70 | | | | | | |
| | 2-Wire Voice Grade Port (Centrex/differ SWC /EBS-5209)2,3,4 Basic Local Area | | | UEP9D | UEPYQ | 1.23 | 108.35 | 70.57 | 54.24 | 11.70 | | | | | | |
| | 2-Wire Voice Grade Port (Centrex/differ SWC /EBS-M5112)2,3,4 Basic Local Area | | | UEP9D | UEPYR | 1.23 | 108.35 | 70.57 | 54.24 | 11.70 | | | | | | |
| | 2-Wire Voice Grade Port (Centrex/differ SWC /EBS-M5312)2,3,4 Basic Local Area | | | UEP9D | UEPYS | 1.23 | 108.35 | 70.57 | 54.24 | 11.70 | | | | | | |

| UNBUNDLED NETWORK ELEMENTS - Mississippi | | | | | | | | | | | | | | Attachment: 2 | | Exhibit: A | |
|---|---|---|---|---|---|---|---|---|---|---|---|---|---|---|---|---|---|
| CATEGORY | | RATE ELEMENTS | Interim | Zone | BCS | USOC | RATES ($) | | | | | Svc Order Submitted Elec per LSR | Svc Order Submitted Manually per LSR | Incremental Charge - Manual Svc Order vs. Electronic-1st | Incremental Charge - Manual Svc Order vs. Electronic-Add'l | Incremental Charge - Manual Svc Order vs. Electronic-Disc 1st | Incremental Charge - Manual Svc Order vs. Electronic-Disc Add'l |
| | | | | | | | Rec | Nonrecurring | | Nonrecurring Disconnect | | OSS Rates ($) | | | | | |
| | | | | | | | | First | Add'l | First | Add'l | SOMEC | SOMAN | SOMAN | SOMAN | SOMAN | SOMAN |
| | | 2-Wire Voice Grade Port (Centrex/differ SWC /EBS-M5008)2,3,4 Basic Local Area | | | UEP9D | UEPY4 | 1.23 | 108.35 | 70.57 | 54.24 | 11.70 | | | | | | |
| | | 2-Wire Voice Grade Port (Centrex/differ SWC /EBS-M5208)2, 3 Basic Local Area | | | UEP9D | UEPY5 | 1.23 | 108.35 | 70.57 | 54.24 | 11.70 | | | | | | |
| | | 2-Wire Voice Grade Port (Centrex/differ SWC /EBS-M5216)2,3,4 Basic Local Area | | | UEP9D | UEPY6 | 1.23 | 108.35 | 70.57 | 54.24 | 11.70 | | | | | | |
| | | 2-Wire Voice Grade Port (Centrex/differ SWC /EBS-M5316)2,3,4 Basic Local Area | | | UEP9D | UEPY7 | 1.23 | 108.35 | 70.57 | 54.24 | 11.70 | | | | | | |
| | | 2-Wire Voice Grade Port, Diff Serving Wire Center - 800 Service Term 2,3 | | | UEP9D | UEPYZ | 1.23 | 108.35 | 70.57 | 54.24 | 11.70 | | | | | | |
| | | 2-Wire Voice Grade Port terminated in on Megalink or equivalent Basic Local Area | | | UEP9D | UEPY9 | 1.23 | 40.31 | 19.84 | 24.90 | 6.58 | | | | | | |
| | | 2-Wire Voice Grade Port Terminated on 800 Service Term Basic Local Area | | | UEP9D | UEPY2 | 1.23 | 40.31 | 19.84 | 24.90 | 6.58 | | | | | | |
| | **AL, KY, LA, MS, SC, & TN Only** | | | | | | | | | | | | | | | | |
| | | 2-Wire Voice Grade Port (Centrex) | | | UEP9D | UEPQA | 1.23 | 40.31 | 19.84 | 24.90 | 6.58 | | | | | | |
| | | 2-Wire Voice Grade Port (Centrex 800 termination) | | | UEP9D | UEPQB | 1.23 | 40.31 | 19.84 | 24.90 | 6.58 | | | | | | |
| | | 2-Wire Voice Grade Port (Centrex / EBS-PSET)4 | | | UEP9D | UEPQC | 1.23 | 40.31 | 19.84 | 24.90 | 6.58 | | | | | | |
| | | 2-Wire Voice Grade Port (Centrex / EBS-M5009)4 | | | UEP9D | UEPQD | 1.23 | 40.31 | 19.84 | 24.90 | 6.58 | | | | | | |
| | | 2-Wire Voice Grade Port (Centrex / EBS-M5209)4 | | | UEP9D | UEPQE | 1.23 | 40.31 | 19.84 | 24.90 | 6.58 | | | | | | |
| | | 2-Wire Voice Grade Port (Centrex / EBS-M5112)4 | | | UEP9D | UEPQF | 1.23 | 40.31 | 19.84 | 24.90 | 6.58 | | | | | | |
| | | 2-Wire Voice Grade Port (Centrex / EBS-M5312)4 | | | UEP9D | UEPQG | 1.23 | 40.31 | 19.84 | 24.90 | 6.58 | | | | | | |
| | | 2-Wire Voice Grade Port (Centrex / EBS-M5008)4 | | | UEP9D | UEPQT | 1.23 | 40.31 | 19.84 | 24.90 | 6.58 | | | | | | |
| | | 2-Wire Voice Grade Port (Centrex / EBS-M5208)4 | | | UEP9D | UEPQU | 1.23 | 40.31 | 19.84 | 24.90 | 6.58 | | | | | | |
| | | 2-Wire Voice Grade Port (Centrex / EBS-M5216)4 | | | UEP9D | UEPQV | 1.23 | 40.31 | 19.84 | 24.90 | 6.58 | | | | | | |
| | | 2-Wire Voice Grade Port (Centrex / EBS-M5316)4 | | | UEP9D | UEPQ3 | 1.23 | 40.31 | 19.84 | 24.90 | 6.58 | | | | | | |
| | | 2-Wire Voice Grade Port (Centrex with Caller ID) | | | UEP9D | UEPQH | 1.23 | 40.31 | 19.84 | 24.90 | 6.58 | | | | | | |
| | | 2-Wire Voice Grade Port (Centrex/Caller ID/Msg Wtg Lamp Indication)4 | | | UEP9D | UEPQW | 1.23 | 40.31 | 19.84 | 24.90 | 6.58 | | | | | | |
| | | 2-Wire Voice Grade Port (Centrex/Msg Wtg Lamp Indication)4 | | | UEP9D | UEPQJ | 1.23 | 40.31 | 19.84 | 24.90 | 6.58 | | | | | | |
| | | 2-Wire Voice Grade Port (Centrex from diff Serving Wire Center) 2,3 | | | UEP9D | UEPQM | 1.23 | 108.35 | 70.57 | 54.24 | 11.70 | | | | | | |
| | | 2-Wire Voice Grade Port (Centrex/differ SWC /EBS-PSET)2,3,4 | | | UEP9D | UEPQO | 1.23 | 108.35 | 70.57 | 54.24 | 11.70 | | | | | | |
| | | 2-Wire Voice Grade Port (Centrex/differ SWC /EBS-M5009)2,3,4 | | | UEP9D | UEPQP | 1.23 | 108.35 | 70.57 | 54.24 | 11.70 | | | | | | |
| | | 2-Wire Voice Grade Port (Centrex/differ SWC /EBS-5209)2,3,4 | | | UEP9D | UEPQQ | 1.23 | 108.35 | 70.57 | 54.24 | 11.70 | | | | | | |
| | | 2-Wire Voice Grade Port (Centrex/differ SWC /EBS-M5112)2,3,4 | | | UEP9D | UEPQR | 1.23 | 108.35 | 70.57 | 54.24 | 11.70 | | | | | | |
| | | 2-Wire Voice Grade Port (Centrex/differ SWC /EBS-M5312)2,3,4 | | | UEP9D | UEPQS | 1.23 | 108.35 | 70.57 | 54.24 | 11.70 | | | | | | |
| | | 2-Wire Voice Grade Port (Centrex/differ SWC /EBS-M5008)2,3,4 | | | UEP9D | UEPQ4 | 1.23 | 108.35 | 70.57 | 54.24 | 11.70 | | | | | | |
| | | 2-Wire Voice Grade Port (Centrex/differ SWC /EBS-M5208)2,3,4 | | | UEP9D | UEPQ5 | 1.23 | 108.35 | 70.57 | 54.24 | 11.70 | | | | | | |
| | | 2-Wire Voice Grade Port (Centrex/differ SWC /EBS-M5216)2,3,4 | | | UEP9D | UEPQ6 | 1.23 | 108.35 | 70.57 | 54.24 | 11.70 | | | | | | |
| | | 2-Wire Voice Grade Port (Centrex/differ SWC /EBS-M5316)2,3,4 | | | UEP9D | UEPQ7 | 1.23 | 108.35 | 70.57 | 54.24 | 11.70 | | | | | | |
| | | 2-Wire Voice Grade Port, Diff Serving Wire Center - 800 Service Term 2,3 | | | UEP9D | UEPQZ | 1.23 | 108.35 | 70.57 | 54.24 | 11.70 | | | | | | |
| | | 2-Wire Voice Grade Port terminated in on Megalink or equivalent | | | UEP9D | UEPQ9 | 1.23 | 40.31 | 19.84 | 24.90 | 6.58 | | | | | | |
| | | 2-Wire Voice Grade Port Terminated on 800 Service Term | | | UEP9D | UEPQ2 | 1.23 | 40.31 | 19.84 | 24.90 | 6.58 | | | | | | |
| | **Local Switching** | | | | | | | | | | | | | | | | |
| | | Centrex Intercom Funtionality, per port | | | UEP9D | URECS | 0.7947 | | | | | | | | | | |
| | **Local Number Portability** | | | | | | | | | | | | | | | | |
| | | Local Number Portability (1 per port) | | | UEP9D | LNPCC | 0.35 | | | | | | | | | | |

| UNBUNDLED NETWORK ELEMENTS - Mississippi | | | | | | | | | | | | | | Attachment: 2 | | Exhibit: A | |
|---|---|---|---|---|---|---|---|---|---|---|---|---|---|---|---|---|---|
| CATEGORY | RATE ELEMENTS | Interim | Zone | BCS | USOC | RATES ($) | | | | | Svc Order Submitted Elec per LSR | Svc Order Submitted Manually per LSR | Incremental Charge - Manual Svc Order vs. Electronic-1st | Incremental Charge - Manual Svc Order vs. Electronic-Add'l | Incremental Charge - Manual Svc Order vs. Electronic-Disc 1st | Incremental Charge - Manual Svc Order vs. Electronic-Disc Add'l |
| | | | | | | Rec | Nonrecurring | | Nonrecurring Disconnect | | OSS Rates ($) | | | | | |
| | | | | | | | First | Add'l | First | Add'l | SOMEC | SOMAN | SOMAN | SOMAN | SOMAN | SOMAN |
| Features | | | | | | | | | | | | | | | | |
| | All Standard Features Offered, per port | | | UEP9D | UEPVF | 2.56 | | | | | | | | | | |
| | All Select Features Offered, per port | | | UEP9D | UEPVS | 0.00 | 404.98 | | | | | | | | | |
| | All Centrex Control Features Offered, per port | | | UEP9D | UEPVC | 2.56 | | | | | | | | | | |
| NARS | | | | | | | | | | | | | | | | |
| | Unbundled Network Access Register - Combination | | | UEP9D | UARCX | 0.00 | 0.00 | 0.00 | 0.00 | 0.00 | | | | | | |
| | Unbundled Network Access Register - Inward | | | UEP9D | UAR1X | 0.00 | 0.00 | 0.00 | 0.00 | 0.00 | | | | | | |
| | Unbundled Network Access Register - Outdial | | | UEP9D | UAROX | 0.00 | 0.00 | 0.00 | 0.00 | 0.00 | | | | | | |
| Miscellaneous Terminations | | | | | | | | | | | | | | | | |
| 2-Wire Trunk Side | | | | | | | | | | | | | | | | |
| | Trunk Side Terminations, each | | | UEP9D | CEND6 | 8.25 | 120.00 | 18.85 | 61.77 | 3.88 | | | | | | |
| 4-Wire Digital (1.544 Megabits) | | | | | | | | | | | | | | | | |
| | DS1 Circuit Terminations, each | | | UEP9D | M1HD1 | 58.41 | 203.19 | 96.25 | 74.86 | 2.54 | | | | | | |
| | DS0 Channels Activiated per Channel | | | UEP9D | M1HDO | 0.00 | 14.56 | | | | | | | | | |
| Interoffice Channel Mileage - 2-Wire | | | | | | | | | | | | | | | | |
| | Interoffice Channel Facilities Termination | | | UEP9D | M1GBC | 22.52 | 40.77 | 27.57 | 17.26 | 7.11 | | | | | | |
| | Interoffice Channel mileage, per mile or fraction of mile | | | UEP9D | M1GBM | 0.0098 | | | | | | | | | | |
| Feature Activations (DS0) Centrex Loops on Channelized DS1 Service | | | | | | | | | | | | | | | | |
| D4 Channel Bank Feature Activations | | | | | | | | | | | | | | | | |
| | Feature Activation on D-4 Channel Bank Centrex Loop Slot | | | UEP9D | 1PQWS | 0.57 | | | | | | | | | | |
| | Feature Activation on D-4 Channel Bank FX line Side Loop Slot | | | UEP9D | 1PQW6 | 0.57 | | | | | | | | | | |
| | Feature Activation on D-4 Channel Bank FX Trunk Side Loop Slot | | | UEP9D | 1PQW7 | 0.57 | | | | | | | | | | |
| | Feature Activation on D-4 Channel Bank Centrex Loop Slot - Different Wire Center | | | UEP9D | 1PQWP | 0.57 | | | | | | | | | | |
| | Feature Activation on D-4 Channel Bank Private Line Loop Slot | | | UEP9D | 1PQWV | 0.57 | | | | | | | | | | |
| | Feature Activation on D-4 Channel Bank Tjie Line/Trunk Loop Slot | | | UEP9D | 1PQWQ | 0.57 | | | | | | | | | | |
| | Feature Activation on D-4 Channel Bank WATS Loop Slot | | | UEP9D | 1PQWA | 0.57 | | | | | | | | | | |
| Non-Recurring Charges (NRC) Associated with UNE-P Centrex | | | | | | | | | | | | | | | | |
| | NRC Conversion Currently Combined Switch-As-Is with allowed changes, per port | | | UEP9D | USAC2 | | 0.10 | 0.10 | | | | | | | | |
| | Conversion of existing Centrex Common Block, each | | | UEP9D | USACN | | 37.97 | 16.68 | | | | | | | | |
| | New Centrex Standard Common Block | | | UEP9D | M1ACS | 0.00 | 666.32 | | | | | | | | | |
| | New Centrex Customized Common Block | | | UEP9D | M1ACC | 0.00 | 666.32 | | | | | | | | | |
| | NAR Establishment Charge, Per Occasion | | | UEP9D | URECA | 0.00 | 72.63 | | | | | | | | | |
| Additional Non-Recurring Charges (NRC) | | | | | | | | | | | | | | | | |
| | Unbundled Miscellaneous Rate Element, Tag Loop at End Use Premise | | | UEP9D | URETL | | 8.33 | 0.83 | | | | | | | | |
| | Unbundled Miscellaneous Rate Element, Tag Design Loop at End Use Premise | | | UEP9D | URETN | | 11.19 | 1.10 | | | | | | | | |
| UNE-P CENTREX - EWSD (Valid in AL, FL, KY, LA, MS & TN) | | | | | | | | | | | | | | | | |
| 2-Wire VG Loop/2-Wire Voice Grade Port (Centrex) Combo | | | | | | | | | | | | | | | | |
| UNE Port/Loop Combination Rates (Non-Design) | | | | | | | | | | | | | | | | |
| | 2-Wire VG Loop/2-Wire Voice Grade Port (Centrex) Port Combo - Non-Design | | 1 | UEP9E | | 12.22 | | | | | | | | | | |
| | 2-Wire VG Loop/2-Wire Voice Grade Port (Centrex)Port Combo - Non-Design | | 2 | UEP9E | | 17.13 | | | | | | | | | | |
| | 2-Wire VG Loop/2-Wire Voice Grade Port (Centrex)Port Combo - Non-Design | | 3 | UEP9E | | 26.26 | | | | | | | | | | |
| | 2-Wire VG Loop/2-Wire Voice Grade Port (Centrex) Port Combo - Non-Design | | 4 | UEP9E | | 44.91 | | | | | | | | | | |
| UNE Port/Loop Combination Rates (Design) | | | | | | | | | | | | | | | | |
| | 2-Wire VG Loop/2-Wire Voice Grade Port (Centrex) Port Combo - Design | | 1 | UEP9E | | 15.12 | | | | | | | | | | |
| | 2-Wire VG Loop/2-Wire Voice Grade Port (Centrex)Port Combo - Design | | 2 | UEP9E | | 19.98 | | | | | | | | | | |

## UNBUNDLED NETWORK ELEMENTS - Mississippi

| CATEGORY | RATE ELEMENTS | Interim | Zone | BCS | USOC | RATES ($) | | | | | Svc Order Submitted Elec per LSR | Svc Order Submitted Manually per LSR | Attachment: 2 Incremental Charge - Manual Svc Order vs. Electronic- 1st | Attachment: 2 Incremental Charge - Manual Svc Order vs. Electronic- Add'l | Exhibit: A Incremental Charge - Manual Svc Order vs. Electronic- Disc 1st | Exhibit: A Incremental Charge - Manual Svc Order vs. Electronic- Disc Add'l |
|---|---|---|---|---|---|---|---|---|---|---|---|---|---|---|---|---|
| | | | | | | Rec | Nonrecurring | | Nonrecurring Disconnect | | OSS Rates ($) | | | | | |
| | | | | | | | First | Add'l | First | Add'l | SOMEC | SOMAN | SOMAN | SOMAN | SOMAN | SOMAN |
| | 2-Wire VG Loop/2-Wire Voice Grade Port (Centrex)Port Combo - Design | | 3 | UEP9E | | 28.78 | | | | | | | | | | |
| | 2-Wire VG Loop/2-Wire Voice Grade Port (Centrex) Port Combo - Design | | 4 | UEP9E | | 46.95 | | | | | | | | | | |
| **UNE Loop Rate** | | | | | | | | | | | | | | | | |
| | 2-Wire Voice Grade Loop (SL 1) - Zone 1 | | 1 | UEP9E | UECS1 | 10.98 | | | | | | | | | | |
| | 2-Wire Voice Grade Loop (SL 1) - Zone 2 | | 2 | UEP9E | UECS1 | 15.91 | | | | | | | | | | |
| | 2-Wire Voice Grade Loop (SL 1) - Zone 3 | | 3 | UEP9E | UECS1 | 25.04 | | | | | | | | | | |
| | 2-Wire Voice Grade Loop (SL 1) - Zone 4 | | 4 | UEP9E | UECS1 | 43.68 | | | | | | | | | | |
| | 2-Wire Voice Grade Loop (SL 2) - Zone 1 | | 1 | UEP9E | UECS2 | 13.89 | | | | | | | | | | |
| | 2-Wire Voice Grade Loop (SL 2) - Zone 2 | | 2 | UEP9E | UECS2 | 18.75 | | | | | | | | | | |
| | 2-Wire Voice Grade Loop (SL 2) - Zone 3 | | 3 | UEP9E | UECS2 | 27.55 | | | | | | | | | | |
| | 2-Wire Voice Grade Loop (SL 2) - Zone 4 | | 4 | UEP9E | UECS2 | 45.72 | | | | | | | | | | |
| **UNE Port Rate** | | | | | | | | | | | | | | | | |
| **AL, FL, KY, LA, MS, & TN only** | | | | | | | | | | | | | | | | |
| | 2-Wire Voice Grade Port (Centrex ) Basic Local Area | | | UEP9E | UEPYA | 1.23 | 40.31 | 19.84 | 24.90 | 6.58 | | | | | | |
| | 2-Wire Voice Grade Port (Centrex 800 termination)Basic Local Area | | | UEP9E | UEPYB | 1.23 | 40.31 | 19.84 | 24.90 | 6.58 | | | | | | |
| | 2-Wire Voice Grade Port (Centrex with Caller ID)1Basic Local Area | | | UEP9E | UEPYH | 1.23 | 40.31 | 19.84 | 24.90 | 6.58 | | | | | | |
| | 2-Wire Voice Grade Port (Centrex from diff Serving Wire Center)2,3 Basic Local Area | | | UEP9E | UEPYM | 1.23 | 108.35 | 70.57 | 54.24 | 11.70 | | | | | | |
| | 2-Wire Voice Grade Port, Diff Serving Wire Center 2,3 - 800 Service Term - Basic Local Area | | | UEP9E | UEPYZ | 1.23 | 108.35 | 70.57 | 54.24 | 11.70 | | | | | | |
| | 2-Wire Voice Grade Port terminated in on Megalink or equivalent - Basic Local Area | | | UEP9E | UEPY9 | 1.23 | 40.31 | 19.84 | 24.90 | 6.58 | | | | | | |
| | 2-Wire Voice Grade Port Terminated on 800 Service Term - Basic Local Area | | | UEP9E | UEPY2 | 1.23 | 40.31 | 19.84 | 24.90 | 6.58 | | | | | | |
| **AL, KY, LA, MS, & TN Only** | | | | | | | | | | | | | | | | |
| | 2-Wire Voice Grade Port (Centrex ) | | | UEP9E | UEPQA | 1.23 | 40.31 | 19.84 | 24.90 | 6.58 | | | | | | |
| | 2-Wire Voice Grade Port (Centrex 800 termination) | | | UEP9E | UEPQB | 1.23 | 40.31 | 19.84 | 24.90 | 6.58 | | | | | | |
| | 2-Wire Voice Grade Port (Centrex with Caller ID)1 | | | UEP9E | UEPQH | 1.23 | 40.31 | 19.84 | 24.90 | 6.58 | | | | | | |
| | 2-Wire Voice Grade Port (Centrex from diff Serving Wire Center)2,3 | | | UEP9E | UEPQM | 1.23 | 108.35 | 70.57 | 54.24 | 11.70 | | | | | | |
| | 2-Wire Voice Grade Port, Diff Serving Wire Center 2,3 - 800 Service Term | | | UEP9E | UEPQZ | 1.23 | 108.35 | 70.57 | 54.24 | 11.70 | | | | | | |
| | 2-Wire Voice Grade Port terminated in on Megalink or equivalent | | | UEP9E | UEPQ9 | 1.23 | 40.31 | 19.84 | 24.90 | 6.58 | | | | | | |
| | 2-Wire Voice Grade Port Terminated on 800 Service Term | | | UEP9E | UEPQ2 | 1.23 | 40.31 | 19.84 | 24.90 | 6.58 | | | | | | |
| **Local Switching** | | | | | | | | | | | | | | | | |
| | Centrex Intercom Funtionality, per port | | | UEP9E | URECS | 0.7947 | | | | | | | | | | |
| **Local Number Portability** | | | | | | | | | | | | | | | | |
| | Local Number Portability (1 per port) | | | UEP9E | LNPCC | 0.35 | | | | | | | | | | |
| **Features** | | | | | | | | | | | | | | | | |
| | All Standard Features Offered, per port | | | UEP9E | UEPVF | 2.56 | | | | | | | | | | |
| | All Select Features Offered, per port | | | UEP9E | UEPVS | 0.00 | 404.98 | | | | | | | | | |
| | All Centrex Control Features Offered, per port | | | UEP9E | UEPVC | 2.56 | | | | | | | | | | |
| **NARS** | | | | | | | | | | | | | | | | |
| | Unbundled Network Access Register - Combination | | | UEP9E | UARCX | 0.00 | 0.00 | 0.00 | 0.00 | 0.00 | | | | | | |
| | Unbundled Network Access Register - Indial | | | UEP9E | UAR1X | 0.00 | 0.00 | 0.00 | 0.00 | 0.00 | | | | | | |
| | Unbundled Network Access Register - Outdial | | | UEP9E | UAROX | 0.00 | 0.00 | 0.00 | 0.00 | 0.00 | | | | | | |
| **Miscellaneous Terminations** | | | | | | | | | | | | | | | | |
| **2-Wire Trunk Side** | | | | | | | | | | | | | | | | |
| | Trunk Side Terminations, each | | | UEP9E | CEND6 | 8.25 | 120.00 | 18.85 | 61.77 | 3.88 | | | | | | |
| **4-Wire Digital (1.544 Megabits)** | | | | | | | | | | | | | | | | |
| | DS1 Circuit Terminations, each | | | UEP9E | M1HD1 | 58.41 | 203.19 | 96.25 | 74.86 | 2.54 | | | | | | |
| | DS0 Channel Activated Per Channel | | | UEP9E | M1HDO | 0.00 | 14.56 | | | | | | | | | |
| **Interoffice Channel Mileage - 2-Wire** | | | | | | | | | | | | | | | | |
| | Interoffice Channel Facilities Termination | | | UEP9E | M1GBC | 22.52 | 40.77 | 27.57 | 17.26 | 7.11 | | | | | | |

## UNBUNDLED NETWORK ELEMENTS - Mississippi

Attachment: 2 | Exhibit: A

| CATEGORY | RATE ELEMENTS | Interim | Zone | BCS | USOC | RATES ($) | | | | | Svc Order Submitted Elec per LSR | Svc Order Submitted Manually per LSR | Incremental Charge - Manual Svc Order vs. Electronic- 1st | Incremental Charge - Manual Svc Order vs. Electronic- Add'l | Incremental Charge - Manual Svc Order vs. Electronic- Disc 1st | Incremental Charge - Manual Svc Order vs. Electronic- Disc Add'l |
|---|---|---|---|---|---|---|---|---|---|---|---|---|---|---|---|---|
| | | | | | | Rec | Nonrecurring | | Nonrecurring Disconnect | | OSS Rates ($) | | | | | |
| | | | | | | | First | Add'l | First | Add'l | SOMEC | SOMAN | SOMAN | SOMAN | SOMAN | SOMAN |
| | Interoffice Channel mileage, per mile or fraction of mile | | | UEP9E | M1GBM | 0.0098 | | | | | | | | | | |
| **Feature Activations (DS0) Centrex Loops on Channelized DS1 Service** | | | | | | | | | | | | | | | | |
| **D4 Channel Bank Feature Activations** | | | | | | | | | | | | | | | | |
| | Feature Activation on D-4 Channel Bank Centrex Loop Slot | | | UEP9E | 1PQWS | 0.57 | | | | | | | | | | |
| | Feature Activation on D-4 Channel Bank FX line Side Loop Slot | | | UEP9E | 1PQW6 | 0.57 | | | | | | | | | | |
| | Feature Activation on D-4 Channel Bank FX Trunk Side Loop Slot | | | UEP9E | 1PQW7 | 0.57 | | | | | | | | | | |
| | Feature Activation on D-4 Channel Bank Centrex Loop Slot - Different Wire Center | | | UEP9E | 1PQWP | 0.57 | | | | | | | | | | |
| | Feature Activation on D-4 Channel Bank Private Line Loop Slot | | | UEP9E | 1PQWV | 0.57 | | | | | | | | | | |
| | Feature Activation on D-4 Channel Bank Tjie Line/Trunk Loop Slot | | | UEP9E | 1PQWQ | 0.57 | | | | | | | | | | |
| | Feature Activation on D-4 Channel Bank WATS Loop Slot | | | UEP9E | 1PQWA | 0.57 | | | | | | | | | | |
| **Non-Recurring Charges (NRC) Associated with UNE-P Centrex** | | | | | | | | | | | | | | | | |
| | NRC Conversion Currently Combined Switch-As-Is with allowed changes, per port | | | UEP9E | USAC2 | | 0.10 | 0.10 | | | | | | | | |
| | Conversion of Existing Centrex Common Block, each | | | UEP9E | USACN | | 37.97 | 16.68 | | | | | | | | |
| | New Centrex Standard Common Block | | | UEP9E | M1ACS | 0.00 | 666.32 | | | | | | | | | |
| | New Centrex Customized Common Block | | | UEP9E | M1ACC | 0.00 | 666.32 | | | | | | | | | |
| | NAR Establishment Charge, Per Occasion | | | UEP9E | URECA | 0.00 | 72.63 | | | | | | | | | |
| **Additional Non-Recurring Charges (NRC)** | | | | | | | | | | | | | | | | |
| | Unbundled Miscellaneous Rate Element, Tag Loop at End Use Premise | | | UEP9E | URETL | | 8.33 | 0.83 | | | | | | | | |
| | Unbundled Miscellaneous Rate Element, Tag Design Loop at End Use Premise | | | UEP9E | URETN | | 11.19 | 1.10 | | | | | | | | |
| **UNE-P CENTREX - DCO - Valid in AL, KY, LA, MS, & TN)** | | | | | | | | | | | | | | | | |
| **2-Wire VG Loop/2-Wire Voice Grade Port (Centrex) Combo** | | | | | | | | | | | | | | | | |
| **UNE Port/Loop Combination Rates (Non-Design)** | | | | | | | | | | | | | | | | |
| | 2-Wire VG Loop/2-Wire Voice Grade Port (Centrex) Port Combo - Non-Design | | 1 | UEP93 | | 12.22 | | | | | | | | | | |
| | 2-Wire VG Loop/2-Wire Voice Grade Port (Centrex)Port Combo - Non-Design | | 2 | UEP93 | | 17.13 | | | | | | | | | | |
| | 2-Wire VG Loop/2-Wire Voice Grade Port (Centrex)Port Combo - Non-Design | | 3 | UEP93 | | 26.26 | | | | | | | | | | |
| | 2-Wire VG Loop/2-Wire Voice Grade Port (Centrex) Port Combo - Non-Design | | 4 | UEP93 | | 44.91 | | | | | | | | | | |
| **UNE Port/Loop Combination Rates (Design)** | | | | | | | | | | | | | | | | |
| | 2-Wire VG Loop/2-Wire Voice Grade Port (Centrex) Port Combo - Design | | 1 | UEP93 | | 15.12 | | | | | | | | | | |
| | 2-Wire VG Loop/2-Wire Voice Grade Port (Centrex)Port Combo - Design | | 2 | UEP93 | | 19.98 | | | | | | | | | | |
| | 2-Wire VG Loop/2-Wire Voice Grade Port (Centrex)Port Combo - Design | | 3 | UEP93 | | 28.78 | | | | | | | | | | |
| | 2-Wire VG Loop/2-Wire Voice Grade Port (Centrex) Port Combo - Design | | 4 | UEP93 | | 46.95 | | | | | | | | | | |
| **UNE Loop Rate** | | | | | | | | | | | | | | | | |
| | 2-Wire Voice Grade Loop (SL 1) - Zone 1 | | 1 | UEP93 | UECS1 | 10.98 | | | | | | | | | | |
| | 2-Wire Voice Grade Loop (SL 1) - Zone 2 | | 2 | UEP93 | UECS1 | 15.91 | | | | | | | | | | |
| | 2-Wire Voice Grade Loop (SL 1) - Zone 3 | | 3 | UEP93 | UECS1 | 25.04 | | | | | | | | | | |
| | 2-Wire Voice Grade Loop (SL 1) - Zone 4 | | 4 | UEP93 | UECS1 | 43.68 | | | | | | | | | | |
| | 2-Wire Voice Grade Loop (SL 2) - Zone 1 | | 1 | UEP93 | UECS2 | 13.89 | | | | | | | | | | |
| | 2-Wire Voice Grade Loop (SL 2) - Zone 2 | | 2 | UEP93 | UECS2 | 18.75 | | | | | | | | | | |
| | 2-Wire Voice Grade Loop (SL 2) - Zone 3 | | 3 | UEP93 | UECS2 | 27.55 | | | | | | | | | | |
| | 2-Wire Voice Grade Loop (SL 2) - Zone 4 | | 4 | UEP93 | UECS2 | 45.72 | | | | | | | | | | |
| **UNE Port Rate** | | | | | | | | | | | | | | | | |
| **AL, KY, LA, MS, & TN only** | | | | | | | | | | | | | | | | |
| | 2-Wire Voice Grade Port (Centrex ) Basic Local Area | | | UEP93 | UEPYA | 1.23 | 40.31 | 19.84 | 24.90 | 6.58 | | | | | | |

## UNBUNDLED NETWORK ELEMENTS - Mississippi

| CATEGORY | RATE ELEMENTS | Interim | Zone | BCS | USOC | RATES ($) | | | | | Svc Order Submitted Elec per LSR | Svc Order Submitted Manually per LSR | Attachment: 2 Incremental Charge - Manual Svc Order vs. Electronic-1st | Attachment: 2 Incremental Charge - Manual Svc Order vs. Electronic-Add'l | Exhibit: A Incremental Charge - Manual Svc Order vs. Electronic-Disc 1st | Exhibit: A Incremental Charge - Manual Svc Order vs. Electronic-Disc Add'l |
|---|---|---|---|---|---|---|---|---|---|---|---|---|---|---|---|---|
| | | | | | | Rec | Nonrecurring First | Nonrecurring Add'l | Nonrecurring Disconnect First | Nonrecurring Disconnect Add'l | OSS Rates ($) SOMEC | OSS Rates ($) SOMAN | OSS Rates ($) SOMAN | OSS Rates ($) SOMAN | OSS Rates ($) SOMAN | OSS Rates ($) SOMAN |
| | 2-Wire Voice Grade Port (Centrex 800 termination)Basic Local Area | | | UEP93 | UEPYB | 1.23 | 40.31 | 19.84 | 24.90 | 6.58 | | | | | | |
| | 2-Wire Voice Grade Port (Centrex with Caller ID)1Basic Local Area | | | UEP93 | UEPYH | 1.23 | 40.31 | 19.84 | 24.90 | 6.58 | | | | | | |
| | 2-Wire Voice Grade Port (Centrex from diff Serving Wire Center)2,3 Basic Local Area | | | UEP93 | UEPYM | 1.23 | 108.35 | 70.57 | 54.24 | 11.70 | | | | | | |
| | 2-Wire Voice Grade Port, Diff Serving Wire Center - 2,3 - 800 Service Term - Basic Local Area | | | UEP93 | UEPYZ | 1.23 | 108.35 | 70.57 | 54.24 | 11.70 | | | | | | |
| | 2-Wire Voice Grade Port terminated in on Megalink or equivalent - Basic Local Area | | | UEP93 | UEPY9 | 1.23 | 40.31 | 19.84 | 24.90 | 6.58 | | | | | | |
| | 2-Wire Voice Grade Port Terminated on 800 Service Term - Basic Local Area | | | UEP93 | UEPY2 | 1.23 | 40.31 | 19.84 | 24.90 | 6.58 | | | | | | |
| | 2-Wire Voice Grade Port (Centrex ) | | | UEP93 | UEPQA | 1.23 | 40.31 | 19.84 | 24.90 | 6.58 | | | | | | |
| | 2-Wire Voice Grade Port (Centrex 800 termination) | | | UEP93 | UEPQB | 1.23 | 40.31 | 19.84 | 24.90 | 6.58 | | | | | | |
| | 2-Wire Voice Grade Port (Centrex with Caller ID)1 | | | UEP93 | UEPQH | 1.23 | 40.31 | 19.84 | 24.90 | 6.58 | | | | | | |
| | 2-Wire Voice Grade Port (Centrex from diff Serving Wire Center)2,3 | | | UEP93 | UEPQM | 1.23 | 108.35 | 70.57 | 54.24 | 11.70 | | | | | | |
| | 2-Wire Voice Grade Port, Diff Serving Wire Center - 2,3 -800 Service Term | | | UEP93 | UEPQZ | 1.23 | 108.35 | 70.57 | 54.24 | 11.70 | | | | | | |
| | 2-Wire Voice Grade Port terminated in on Megalink or equivalent | | | UEP93 | UEPQ9 | 1.23 | 40.31 | 19.84 | 24.90 | 6.58 | | | | | | |
| | 2-Wire Voice Grade Port Terminated on 800 Service Term | | | UEP93 | UEPQ2 | 1.23 | 40.31 | 19.84 | 24.90 | 6.58 | | | | | | |
| **Local Switching** | | | | | | | | | | | | | | | | |
| | Centrex Intercom Funtionality, per port | | | UEP93 | URECS | 0.7947 | | | | | | | | | | |
| **Local Number Portability** | | | | | | | | | | | | | | | | |
| | Local Number Portability (1 per port) | | | UEP93 | LNPCC | 0.35 | | | | | | | | | | |
| **Features** | | | | | | | | | | | | | | | | |
| | All Standard Features Offered, per port | | | UEP93 | UEPVF | 2.56 | | | | | | | | | | |
| | All Centrex Control Features Offered, per port | | | UEP93 | UEPVC | 2.56 | | | | | | | | | | |
| **NARS** | | | | | | | | | | | | | | | | |
| | Unbundled Network Access Register - Combination | | | UEP93 | UARCX | 0.00 | 0.00 | 0.00 | 0.00 | 0.00 | | | | | | |
| | Unbundled Network Access Register - Indial | | | UEP93 | UAR1X | 0.00 | 0.00 | 0.00 | 0.00 | 0.00 | | | | | | |
| | Unbundled Network Access Register - Outdial | | | UEP93 | UAROX | 0.00 | 0.00 | 0.00 | 0.00 | 0.00 | | | | | | |
| **Miscellaneous Terminations** | | | | | | | | | | | | | | | | |
| **2-Wire Trunk Side** | | | | | | | | | | | | | | | | |
| | Trunk Side Terminations, each | | | UEP93 | CEND6 | 8.25 | 120.00 | 18.85 | 61.77 | 3.88 | | | | | | |
| **4-Wire Digital (1.544 Megabits)** | | | | | | | | | | | | | | | | |
| | DS1 Circuit Terminations, each | | | UEP93 | M1HD1 | 58.41 | 203.19 | 96.25 | 74.86 | 2.54 | | | | | | |
| | DS0 Channels Activated, Per Channel | | | UEP93 | M1HDO | 0.00 | 14.56 | | | | | | | | | |
| **Interoffice Channel Mileage - 2-Wire** | | | | | | | | | | | | | | | | |
| | Interoffice Channel Facilities Termination | | | UEP93 | M1GBC | 22.52 | 40.77 | 27.57 | 17.26 | 7.11 | | | | | | |
| | Interoffice Channel mileage, per mile or fraction of mile | | | UEP93 | M1GBM | 0.0098 | | | | | | | | | | |
| **Feature Activations (DS0) Centrex Loops on Channelized DS1 Service** | | | | | | | | | | | | | | | | |
| **D4 Channel Bank Feature Activations** | | | | | | | | | | | | | | | | |
| | Feature Activation on D-4 Channel Bank Centrex Loop Slot | | | UEP93 | 1PQWS | 0.57 | | | | | | | | | | |
| | Feature Activation on D-4 Channel Bank FX Line Side Loop Slot | | | UEP93 | 1PQW6 | 0.57 | | | | | | | | | | |
| | Feature Activation on D-4 Channel Bank FX Trunk Side Loop Slot | | | UEP93 | 1PQW7 | 0.57 | | | | | | | | | | |
| | Feature Activation on D-4 Channel Bank Centrex Loop Slot - Different Wire Center | | | UEP93 | 1PQWP | 0.57 | | | | | | | | | | |
| | Feature Activation on D-4 Channel Bank Private Line Loop Slot | | | UEP93 | 1PQWV | 0.57 | | | | | | | | | | |
| | Feature Activation on D-4 Channel Bank Tie Line/Trunk Loop Slot | | | UEP93 | 1PQWQ | 0.57 | | | | | | | | | | |
| | Feature Activation on D-4 Channel Bank WATS Loop Slot | | | UEP93 | 1PQWA | 0.57 | | | | | | | | | | |
| **Non-Recurring Charges (NRC) Associated with UNE-P Centrex** | | | | | | | | | | | | | | | | |
| | NRC Conversion Currently Combined Switch-As-Is with allowed changes, per port | | | UEP93 | USAC2 | | 0.10 | 0.10 | | | | | | | | |

| UNBUNDLED NETWORK ELEMENTS - Mississippi | | | | | | | | | | | | | Attachment: 2 | | Exhibit: A | |
|---|---|---|---|---|---|---|---|---|---|---|---|---|---|---|---|---|
| CATEGORY | | RATE ELEMENTS | Interim | Zone | BCS | USOC | RATES ($) | | | | | Svc Order Submitted Elec per LSR | Svc Order Submitted Manually per LSR | Incremental Charge - Manual Svc Order vs. Electronic-1st | Incremental Charge - Manual Svc Order vs. Electronic-Add'l | Incremental Charge - Manual Svc Order vs. Electronic-Disc 1st | Incremental Charge - Manual Svc Order vs. Electronic-Disc Add'l |
| | | | | | | | Rec | Nonrecurring | | Nonrecurring Disconnect | | OSS Rates ($) | | | | | |
| | | | | | | | | First | Add'l | First | Add'l | SOMEC | SOMAN | SOMAN | SOMAN | SOMAN | SOMAN |
| | | Conversion of Existing Centrex Common Block, each | | | UEP93 | USACN | | 37.97 | 16.68 | | | | | | | | |
| | | New Centrex Standard Common Block | | | UEP93 | M1ACS | 0.00 | 666.32 | | | | | | | | | |
| | | New Centrex Customized Common Block | | | UEP93 | M1ACC | 0.00 | 666.32 | | | | | | | | | |
| | | NAR Establishment Charge, Per Occasion | | | UEP93 | URECA | 0.00 | 72.63 | | | | | | | | | |
| | **Additional Non-Recurring Charges (NRC)** | | | | | | | | | | | | | | | | |
| | | Unbundled Miscellaneous Rate Element, Tag Loop at End Use Premise | | | UEP93 | URETL | | 8.33 | 0.83 | | | | | | | | |
| | | Unbundled Miscellaneous Rate Element, Tag Design Loop at End Use Premise | | | UEP93 | URETN | | 11.19 | 1.10 | | | | | | | | |
| | **Note 1 - Required Port for Centrex Control in 1AESS, 5ESS & EWSD** | | | | | | | | | | | | | | | | |
| | **Note 2 - Requres Interoffice Channel Mileage** | | | | | | | | | | | | | | | | |
| | **Note 3 - Installation is combination of Installation charge for SL2 Loop and Port** | | | | | | | | | | | | | | | | |
| | **Note 4 - Requires Specific Customer Premises Equipment** | | | | | | | | | | | | | | | | |
| | **Note: Rates displaying an "R" in Interim column are interim and subject to rate true-up as set forth in General Terms and Conditions.** | | | | | | | | | | | | | | | | |

## UNBUNDLED NETWORK ELEMENTS - North Carolina

Attachment: 2 | Exhibit: A

| CATEGORY | RATE ELEMENTS | Interim | Zone | BCS | USOC | RATES ($) Rec | Nonrecurring First | Nonrecurring Add'l | Nonrecurring Disconnect First | Nonrecurring Disconnect Add'l | Svc Order Submitted Elec per LSR | Svc Order Submitted Manually per LSR | Incremental Charge - Manual Svc Order vs. Electronic- 1st | Incremental Charge - Manual Svc Order vs. Electronic- Add'l | Incremental Charge - Manual Svc Order vs. Electronic- Disc 1st | Incremental Charge - Manual Svc Order vs. Electronic- Disc Add'l |
|---|---|---|---|---|---|---|---|---|---|---|---|---|---|---|---|---|
| | | | | | | | | | | | OSS Rates ($) | | | | | |
| | | | | | | | | | | | SOMEC | SOMAN | SOMAN | SOMAN | SOMAN | SOMAN |
| | The "Zone" shown in the sections for stand-alone loops or loops as part of a combination refers to Geographically Deaveraged UNE Zones. To view Geographically Deaveraged UNE Zone Designations by Central Office, refer to Internet Website: http://www.interconnection.bellsouth.com/become_a_clec/html/interconnection.htm | | | | | | | | | | | | | | | |
| OPERATIONAL SUPPORT SYSTEMS (OSS) - "REGIONAL RATES" | | | | | | | | | | | | | | | | |
| | NOTE: (1) CLEC should contact its contract negotiator if it prefers the "state specific" OSS charges as ordered by the State Commissions. The OSS charges currently contained in this rate exhibit are the BellSouth "regional" service ordering charges. CLEC may elect either the state specific Commission ordered rates for the service ordering charges, or CLEC may elect the regional service ordering charge, however, CLEC can not obtain a mixture of the two regardless if CLEC has a interconnection contract established in each of the 9 states. | | | | | | | | | | | | | | | |
| | NOTE: (2) Any element that can be ordered electronically will be billed according to the SOMEC rate listed in this category. Please refer to BellSouth's Local Ordering Handbook (LOH) to determine if a product can be ordered electronically. For those elements that cannot be ordered electronically at present per the LOH, the listed SOMEC rate in this category reflects the charge that would be billed to a CLEC once electronic ordering capabilities come on-line for that element. Otherwise, the manual ordering charge, SOMAN, will be applied to a CLECs bill when it submits an LSR to BellSouth. | | | | | | | | | | | | | | | |
| | NOTE: (3) OSS - Manual Service Order Charge, Per Element - UNE Only **Please see applicable rate element for SOMAN charge** | | | | | | | | | | | | | | | |
| | OSS - Electronic Service Order Charge, Per Local Service Request (LSR) - UNE Only | | | | SOMEC | | 3.50 | 0.00 | 3.50 | 0.00 | | | | | | |
| UNE SERVICE DATE ADVANCEMENT CHARGE | | | | | | | | | | | | | | | | |
| | NOTE: The Expedite charge will be maintained commensurate with BellSouth's FCC No.1 Tariff, Section 5 as applicable. | | | | | | | | | | | | | | | |
| | UNE Expedite Charge per Circuit or Line Assignable USOC, per Day | | | UAL, UEANL, UCL, UEF, UDF, UEQ, UDL, UENTW, UDN, UEA, UHL, ULC, USL, U1T12, U1T48, U1TD1, U1TD3, U1TDX, U1TO3, U1TS1, U1TVX, UC1BC, UC1BL, UC1CC, UC1CL, UC1DC, UC1DL, UC1EC, UC1EL, UC1FC, UC1FL, UC1GC, UC1GL, UC1HC, UC1HL, UDL12, UDL48, UDLO3, UDLSX, UE3, ULD12, ULD48, ULDD1, ULDD3, ULDDX, ULDO3, ULDS1, ULDVX, UNC1X, UNC3X, UNCDX, UNCNX, UNCSX, UNCVX, UNLD1, UNLD3, UXTD1, UXTD3, UXTS1, U1TUC, U1TUD, U1TUB, U1TUA | SDASP | | 200.00 | | | | | | | | | |
| UNBUNDLED EXCHANGE ACCESS LOOP | | | | | | | | | | | | | | | | |
| | 2-WIRE ANALOG VOICE GRADE LOOP | | | | | | | | | | | | | | | |
| | 2-Wire Analog Voice Grade Loop - Service Level 1- Zone 1 | | 1 | UEANL | UEAL2 | 12.11 | 57.99 | 42.37 | | | | | 26.94 | 12.76 | 0.00 | 0.00 |
| | 2-Wire Analog Voice Grade Loop - Service Level 1- Zone 2 | | 2 | UEANL | UEAL2 | 21.24 | 57.99 | 42.37 | | | | | 26.94 | 12.76 | 0.00 | 0.00 |
| | 2-Wire Analog Voice Grade Loop - Service Level 1- Zone 3 | | 3 | UEANL | UEAL2 | 33.65 | 57.99 | 42.37 | | | | | 26.94 | 12.76 | 0.00 | 0.00 |
| | 2-Wire Analog Voice Grade Loop - Service Level 1- Zone 1 | | 1 | UEANL | UEASL | 12.11 | 57.99 | 42.37 | | | | | 26.94 | 12.76 | 0.00 | 0.00 |
| | 2-Wire Analog Voice Grade Loop - Service Level 1- Zone 2 | | 2 | UEANL | UEASL | 21.24 | 57.99 | 42.37 | | | | | 26.94 | 12.76 | 0.00 | 0.00 |
| | 2-Wire Analog Voice Grade Loop - Service Level 1- Zone 3 | | 3 | UEANL | UEASL | 33.65 | 57.99 | 42.37 | | | | | 26.94 | 12.76 | 0.00 | 0.00 |
| | Unbundled Miscellaneous Rate Element, Tag Loop at End User Premise | | | UEANL | URETL | | 8.33 | 0.83 | | | | | 26.94 | 12.76 | 0.00 | 0.00 |
| | Loop Testing - Basic 1st Half Hour | | | UEANL | URET1 | | 76.24 | 76.24 | | | | | 26.94 | 12.76 | 0.00 | 0.00 |
| | Loop Testing - Basic Additional Half Hour | | | UEANL | URETA | | 39.51 | 39.51 | | | | | 26.94 | 12.76 | 0.00 | 0.00 |
| | CLEC to CLEC Conversion Charge Without Outside Dispatch (UVL-SL1) | | | UEANL | UREWO | | 15.76 | 8.93 | | | | | 26.94 | 12.76 | 0.00 | 0.00 |

| UNBUNDLED NETWORK ELEMENTS - North Carolina | | | | | | | | | | | | | | Attachment: 2 | | Exhibit: A | |
|---|---|---|---|---|---|---|---|---|---|---|---|---|---|---|---|---|---|
| CATEGORY | | RATE ELEMENTS | Interim | Zone | BCS | USOC | RATES ($) | | | | | Svc Order Submitted Elec per LSR | Svc Order Submitted Manually per LSR | Incremental Charge - Manual Svc Order vs. Electronic-1st | Incremental Charge - Manual Svc Order vs. Electronic-Add'l | Incremental Charge - Manual Svc Order vs. Electronic-Disc 1st | Incremental Charge - Manual Svc Order vs. Electronic-Disc Add'l |
| | | | | | | | Rec | Nonrecurring | | Nonrecurring Disconnect | | OSS Rates ($) | | | | | |
| | | | | | | | | First | Add'l | First | Add'l | SOMEC | SOMAN | SOMAN | SOMAN | SOMAN | SOMAN |
| | | Unbundled Voice Loop, Non-Design Voice Loop, billing for BST providing make-up (Engineering Information - E.I.) | | | UEANL | UEANM | | 28.74 | 28.74 | | | | | | | | |
| | | Manual Order Coordination for UVL-SL1s (per loop) | | | UEANL | UEAMC | | 61.38 | 61.38 | | | | | | | | |
| | | Order Coordination for Specified Conversion Time for UVL-SL1 (per LSR) | | | UEANL | OCOSL | | 45.34 | 45.34 | | | | | | | | |
| | 2-WIRE Unbundled COPPER LOOP | | | | | | | | | | | | | | | | |
| | | 2-Wire Unbundled Copper Loop - Non-Designed Zone 1 | | 1 | UEQ | UEQ2X | 10.16 | 35.27 | 15.60 | | | | | 26.94 | 12.76 | 0.00 | 0.00 |
| | | 2 Wire Unbundled Copper Loop - Non-Designed - Zone 2 | | 2 | UEQ | UEQ2X | 17.55 | 35.27 | 15.60 | | | | | 26.94 | 12.76 | 0.00 | 0.00 |
| | | 2 Wire Unbundled Copper Loop - Non-Designed - Zone 3 | | 3 | UEQ | UEQ2X | 27.58 | 35.27 | 15.60 | | | | | 26.94 | 12.76 | 0.00 | 0.00 |
| | | Unbundled Miscellaneous Rate Element, Tag Loop at End User Premise | | | UEQ | URETL | | 8.33 | 0.83 | | | | | 26.94 | 12.76 | 0.00 | 0.00 |
| | | Manual Order Coordination 2 Wire Unbundled Copper Loop - Non-Designed (per loop) | | | UEQ | USBMC | | 61.38 | 61.38 | | | | | | | | |
| | | Unbundled Copper Loop, Non-Design Copper Loop, billing for BST providing make-up (Engineering Information - E.I.) | | | UEQ | UEQMU | | 28.74 | 28.74 | | | | | 26.94 | 12.76 | 0.00 | 0.00 |
| | | Loop Testing - Basic 1st Half Hour | | | UEQ | URET1 | | 76.24 | 76.24 | | | | | 26.94 | 12.76 | 0.00 | 0.00 |
| | | Loop Testing - Basic Additional Half Hour | | | UEQ | URETA | | 39.51 | 39.51 | | | | | 26.94 | 12.76 | 0.00 | 0.00 |
| | | CLEC to CLEC Conversion Charge Without Outside Dispatch (UCL-ND) | | | UEQ | UREWO | | 14.26 | 7.42 | | | | | 26.94 | 12.76 | 0.00 | 0.00 |
| UNBUNDLED EXCHANGE ACCESS LOOP | | | | | | | | | | | | | | | | | |
| | 2-WIRE ANALOG VOICE GRADE LOOP | | | | | | | | | | | | | | | | |
| | | 2 Wire Analog Voice Grade Loop-Service Level 1-Line Splitting-Zone 1 | | 1 | UEPSR UEPSB | UEALS | 12.11 | 57.99 | 42.37 | 0.00 | 0.00 | | | 26.94 | 12.76 | | |
| | | 2 Wire Analog Voice Grade Loop-Service Level 1-Line Splitting-Zone 1 | | 1 | UEPSR UEPSB | UEABS | 12.11 | 57.99 | 42.37 | 0.00 | 0.00 | | | 26.94 | 12.76 | | |
| | | 2 Wire Analog Voice Grade Loop- Service Level 1-Line Splitting-Zone 2 | | 2 | UEPSR UEPSB | UEALS | 21.24 | 57.99 | 42.37 | 0.00 | 0.00 | | | 26.94 | 12.76 | | |
| | | 2 Wire Analog Voice Grade Loop- Service Level 1-Line Splitting-Zone 2 | | 2 | UEPSR UEPSB | UEABS | 21.24 | 57.99 | 42.37 | 0.00 | 0.00 | | | 26.94 | 12.76 | | |
| | | 2 Wire Analog Voice Grade Loop-Service Level 1-Line Splitting-Zone 3 | | 3 | UEPSR UEPSB | UEALS | 33.65 | 57.99 | 42.37 | 0.00 | 0.00 | | | 26.94 | 12.76 | | |
| | | 2 Wire Analog Voice Grade Loop-Service Level 1-Line Splitting-Zone 3 | | 3 | UEPSR UEPSB | UEABS | 33.65 | 57.99 | 42.37 | 0.00 | 0.00 | | | 26.94 | 12.76 | | |
| UNBUNDLED EXCHANGE ACCESS LOOP | | | | | | | | | | | | | | | | | |
| | 2-WIRE ANALOG VOICE GRADE LOOP | | | | | | | | | | | | | | | | |
| | | 2-Wire Analog Voice Grade Loop - Service Level 2 w/Loop or Ground Start Signaling - Zone 1 | | 1 | UEA | UEAL2 | 14.97 | 142.97 | 106.56 | | | | | 26.94 | 12.76 | 0.00 | 0.00 |
| | | 2-Wire Analog Voice Grade Loop - Service Level 2 w/Loop or Ground Start Signaling - Zone 2 | | 2 | UEA | UEAL2 | 25.93 | 142.97 | 106.56 | | | | | 26.94 | 12.76 | 0.00 | 0.00 |
| | | 2-Wire Analog Voice Grade Loop - Service Level 2 w/Loop or Ground Start Signaling - Zone 3 | | 3 | UEA | UEAL2 | 40.81 | 142.97 | 106.56 | | | | | 26.94 | 12.76 | 0.00 | 0.00 |
| | | Order Coordination for Specified Conversion Time (per LSR) | | | UEA | OCOSL | | 45.34 | | | | | | | | | |
| | | 2-Wire Analog Voice Grade Loop - Service Level 2 w/Reverse Battery Signaling - Zone 1 | | 1 | UEA | UEAR2 | 14.97 | 142.97 | 106.56 | | | | | 26.94 | 12.76 | 0.00 | 0.00 |
| | | 2-Wire Analog Voice Grade Loop - Service Level 2 w/Reverse Battery Signaling - Zone 2 | | 2 | UEA | UEAR2 | 25.93 | 142.97 | 106.56 | | | | | 26.94 | 12.76 | 0.00 | 0.00 |
| | | 2-Wire Analog Voice Grade Loop - Service Level 2 w/Reverse Battery Signaling - Zone 3 | | 3 | UEA | UEAR2 | 40.81 | 142.97 | 106.56 | | | | | 26.94 | 12.76 | 0.00 | 0.00 |
| | | Order Coordination for Specified Conversion Time (per LSR) | | | UEA | OCOSL | | 45.34 | | | | | | | | | |
| | | CLEC to CLEC Conversion Charge without outside dispatch | | | UEA | UREWO | | 87.64 | 36.33 | | | | | 26.94 | 12.76 | 0.00 | 0.00 |
| | | Loop Tagging - Service Level 2 (SL2) | | | UEA | URETL | | 11.20 | 1.10 | | | | | 26.94 | 12.76 | 0.00 | 0.00 |
| | 4-WIRE ANALOG VOICE GRADE LOOP | | | | | | | | | | | | | | | | |
| | | 4-Wire Analog Voice Grade Loop - Zone 1 | | 1 | UEA | UEAL4 | 21.32 | 288.47 | 237.45 | | | | | 26.94 | 12.76 | 0.00 | 0.00 |
| | | 4-Wire Analog Voice Grade Loop - Zone 2 | | 2 | UEA | UEAL4 | 36.27 | 288.47 | 237.45 | | | | | 26.94 | 12.76 | 0.00 | 0.00 |
| | | 4-Wire Analog Voice Grade Loop - Zone 3 | | 3 | UEA | UEAL4 | 56.57 | 288.47 | 237.45 | | | | | 26.94 | 12.76 | 0.00 | 0.00 |
| | | Order Coordination for Specified Conversion Time (per LSR) | | | UEA | OCOSL | | 45.34 | | | | | | | | | |
| | | CLEC to CLEC Conversion Charge without outside dispatch | | | UEA | UREWO | | 87.64 | 36.33 | | | | | 26.94 | 12.76 | 0.00 | 0.00 |
| | 2-WIRE ISDN DIGITAL GRADE LOOP | | | | | | | | | | | | | | | | |
| | | 2-Wire ISDN Digital Grade Loop - Zone 1 | | 1 | UDN | U1L2X | 19.42 | 325.91 | 251.31 | | | | | 26.94 | 12.76 | 0.00 | 0.00 |

| UNBUNDLED NETWORK ELEMENTS - North Carolina | | | | | | | | | | | | | | Attachment: 2 | | Exhibit: A | |
|---|---|---|---|---|---|---|---|---|---|---|---|---|---|---|---|---|---|
| CATEGORY | RATE ELEMENTS | Interim | Zone | BCS | USOC | RATES ($) | | | | | Svc Order Submitted Elec per LSR | Svc Order Submitted Manually per LSR | Incremental Charge - Manual Svc Order vs. Electronic-1st | Incremental Charge - Manual Svc Order vs. Electronic-Add'l | Incremental Charge - Manual Svc Order vs. Electronic-Disc 1st | Incremental Charge - Manual Svc Order vs. Electronic-Disc Add'l |
| | | | | | | Rec | Nonrecurring | | Nonrecurring Disconnect | | OSS Rates ($) | | | | | |
| | | | | | | | First | Add'l | First | Add'l | SOMEC | SOMAN | SOMAN | SOMAN | SOMAN | SOMAN |
| | 2-Wire ISDN Digital Grade Loop - Zone 2 | | 2 | UDN | U1L2X | 32.88 | 325.91 | 251.31 | | | | | 26.94 | 12.76 | 0.00 | 0.00 |
| | 2-Wire ISDN Digital Grade Loop - Zone 3 | | 3 | UDN | U1L2X | 51.14 | 325.91 | 251.31 | | | | | 26.94 | 12.76 | 0.00 | 0.00 |
| | Order Coordination For Specified Conversion Time (per LSR) | | | UDN | OCOSL | | 45.34 | | | | | | | | | |
| | CLEC to CLEC Conversion Charge without outside dispatch | | | UDN | UREWO | | 91.55 | 44.12 | | | | | 26.94 | 12.76 | 0.00 | 0.00 |
| | **2-WIRE ASYMMETRICAL DIGITAL SUBSCRIBER LINE (ADSL) COMPATIBLE LOOP** | | | | | | | | | | | | | | | |
| | 2 Wire Unbundled ADSL Loop including manual service inquiry & facility reservation - Zone 1 | | 1 | UAL | UAL2X | 11.00 | 264.71 | 145.60 | | | | | 26.94 | 12.76 | 0.00 | 0.00 |
| | 2 Wire Unbundled ADSL Loop including manual service inquiry & facility reservation - Zone 2 | | 2 | UAL | UAL2X | 18.39 | 264.71 | 145.60 | | | | | 26.94 | 12.76 | 0.00 | 0.00 |
| | 2 Wire Unbundled ADSL Loop including manual service inquiry & facility reservation - Zone 3 | | 3 | UAL | UAL2X | 28.42 | 264.71 | 145.60 | | | | | 26.94 | 12.76 | 0.00 | 0.00 |
| | Order Coordination for Specified Conversion Time (per LSR) | | | UAL | OCOSL | | 45.34 | | | | | | | | | |
| | 2 Wire Unbundled ADSL Loop without manual service inquiry & facility reservaton - Zone 1 | | 1 | UAL | UAL2W | 11.00 | 190.25 | 114.82 | | | | | 26.94 | 12.76 | 0.00 | 0.00 |
| | 2 Wire Unbundled ADSL Loop without manual service inquiry & facility reservaton - Zone 2 | | 2 | UAL | UAL2W | 18.39 | 190.25 | 114.82 | | | | | 26.94 | 12.76 | 0.00 | 0.00 |
| | 2 Wire Unbundled ADSL Loop without manual service inquiry & facility reservaton - Zone 3 | | 3 | UAL | UAL2W | 28.42 | 190.25 | 114.82 | | | | | 26.94 | 12.76 | 0.00 | 0.00 |
| | Order Coordination for Specified Conversion Time (per LSR) | | | UAL | OCOSL | | 45.34 | | | | | | | | | |
| | CLEC to CLEC Conversion Charge without outside dispatch | | | UAL | UREWO | | 86.12 | 40.36 | | | | | 26.94 | 12.76 | 0.00 | 0.00 |
| | **2-WIRE HIGH BIT RATE DIGITAL SUBSCRIBER LINE (HDSL) COMPATIBLE LOOP** | | | | | | | | | | | | | | | |
| | 2 Wire Unbundled HDSL Loop including manual service inquiry & facility reservation - Zone 1 | | 1 | UHL | UHL2X | 9.01 | 284.74 | 163.54 | | | | | 26.94 | 12.76 | 0.00 | 0.00 |
| | 2 Wire Unbundled HDSL Loop including manual service inquiry & facility reservation - Zone 2 | | 2 | UHL | UHL2X | 14.87 | 284.74 | 163.54 | | | | | 26.94 | 12.76 | 0.00 | 0.00 |
| | 2 Wire Unbundled HDSL Loop including manual service inquiry & facility reservation - Zone 3 | | 3 | UHL | UHL2X | 22.82 | 284.74 | 163.54 | | | | | 26.94 | 12.76 | 0.00 | 0.00 |
| | Order Coordination for Specified Conversion Time (per LSR) | | | UHL | OCOSL | | 45.34 | | | | | | | | | |
| | 2 Wire Unbundled HDSL Loop without manual service inquiry and facility reservation - Zone 1 | | 1 | UHL | UHL2W | 9.01 | 207.48 | 132.05 | | | | | 26.94 | 12.76 | 0.00 | 0.00 |
| | 2 Wire Unbundled HDSL Loop without manual service inquiry and facility reservation - Zone 2 | | 2 | UHL | UHL2W | 14.87 | 207.48 | 132.05 | | | | | 26.94 | 12.76 | 0.00 | 0.00 |
| | 2 Wire Unbundled HDSL Loop without manual service inquiry and facility reservation - Zone 3 | | 3 | UHL | UHL2W | 22.82 | 207.48 | 132.05 | | | | | 26.94 | 12.76 | 0.00 | 0.00 |
| | Order Coordination for Specified Conversion Time (per LSR) | | | UHL | OCOSL | | 45.34 | | | | | | | | | |
| | CLEC to CLEC Conversion Charge without outside dispatch | | | UHL | UREWO | | 86.06 | 40.36 | | | | | 26.94 | 12.76 | 0.00 | 0.00 |
| | **4-WIRE HIGH BIT RATE DIGITAL SUBSCRIBER LINE (HDSL) COMPATIBLE LOOP** | | | | | | | | | | | | | | | |
| | 4 Wire Unbundled HDSL Loop including manual service inquiry and facility reservation - Zone 1 | | 1 | UHL | UHL4X | 10.62 | 341.65 | 220.45 | | | | | 26.94 | 12.76 | 0.00 | 0.00 |
| | 4-Wire Unbundled HDSL Loop including manual service inquiry and facility reservation - Zone 2 | | 2 | UHL | UHL4X | 17.67 | 341.65 | 220.45 | | | | | 26.94 | 12.76 | 0.00 | 0.00 |
| | 4-Wire Unbundled HDSL Loop including manual service inquiry and facility reservation - Zone 3 | | 3 | UHL | UHL4X | 27.24 | 341.65 | 220.45 | | | | | 26.94 | 12.76 | 0.00 | 0.00 |
| | Order Coordination for Specified Conversion Time (per LSR) | | | UHL | OCOSL | | 45.34 | | | | | | | | | |
| | 4-Wire Unbundled HDSL Loop without manual service inquiry and facility reservation - Zone 1 | | 1 | UHL | UHL4W | 10.62 | 264.39 | 188.96 | | | | | 26.94 | 12.76 | 0.00 | 0.00 |
| | 4-Wire Unbundled HDSL Loop without manual service inquiry and facility reservation - Zone 2 | | 2 | UHL | UHL4W | 17.67 | 264.39 | 188.96 | | | | | 26.94 | 12.76 | 0.00 | 0.00 |
| | 4-Wire Unbundled HDSL Loop without manual service inquiry and facility reservation - Zone 3 | | 3 | UHL | UHL4W | 27.24 | 264.39 | 188.96 | | | | | 26.94 | 12.76 | 0.00 | 0.00 |
| | Order Coordination for Specified Conversion Time (per LSR) | | | UHL | OCOSL | | 45.34 | | | | | | | | | |
| | CLEC to CLEC Conversion Charge without outside dispatch | | | UHL | UREWO | | 86.06 | 40.36 | | | | | 26.94 | 12.76 | 0.00 | 0.00 |
| | **4-WIRE DS1 DIGITAL LOOP** | | | | | | | | | | | | | | | |
| | 4-Wire DS1 Digital Loop - Zone 1 | | 1 | USL | USLXX | 47.60 | 714.84 | 421.47 | | | | | 42.19 | 12.76 | 0.00 | 0.00 |
| | 4-Wire DS1 Digital Loop - Zone 2 | | 2 | USL | USLXX | 84.36 | 714.84 | 421.47 | | | | | 42.19 | 12.76 | 0.00 | 0.00 |
| | 4-Wire DS1 Digital Loop - Zone 3 | | 3 | USL | USLXX | 134.29 | 714.84 | 421.47 | | | | | 42.19 | 12.76 | 0.00 | 0.00 |
| | Order Coordination for Specified Conversion Time (per LSR) | | | USL | OCOSL | | 48.31 | | | | | | | | | |
| | CLEC to CLEC Conversion Charge without outside dispatch | | | USL | UREWO | | 100.99 | 43.00 | | | | | 26.94 | 12.76 | 0.00 | 0.00 |
| | **4-WIRE 19.2, 56 OR 64 KBPS DIGITAL GRADE LOOP** | | | | | | | | | | | | | | | |

| UNBUNDLED NETWORK ELEMENTS - North Carolina | | | | | | | | | | | | | | Attachment: 2 | | Exhibit: A | |
|---|---|---|---|---|---|---|---|---|---|---|---|---|---|---|---|---|---|
| CATEGORY | | RATE ELEMENTS | Interim | Zone | BCS | USOC | RATES ($) | | | | | Svc Order Submitted Elec per LSR | Svc Order Submitted Manually per LSR | Incremental Charge - Manual Svc Order vs. Electronic-1st | Incremental Charge - Manual Svc Order vs. Electronic-Add'l | Incremental Charge - Manual Svc Order vs. Electronic-Disc 1st | Incremental Charge - Manual Svc Order vs. Electronic-Disc Add'l |
| | | | | | | | Rec | Nonrecurring | | Nonrecurring Disconnect | | OSS Rates ($) | | | | | |
| | | | | | | | | First | Add'l | First | Add'l | SOMEC | SOMAN | SOMAN | SOMAN | SOMAN | SOMAN |
| | | 4 Wire Unbundled Digital 19.2 Kbps | | 1 | UDL | UDL19 | 25.32 | 489.04 | 337.51 | | | | | 26.94 | 12.76 | 0.00 | 0.00 |
| | | 4 Wire Unbundled Digital 19.2 Kbps | | 2 | UDL | UDL19 | 43.11 | 489.04 | 337.51 | | | | | 26.94 | 12.76 | 0.00 | 0.00 |
| | | 4 Wire Unbundled Digital 19.2 Kbps | | 3 | UDL | UDL19 | 67.26 | 489.04 | 337.51 | | | | | 26.94 | 12.76 | 0.00 | 0.00 |
| | | 4 Wire Unbundled Digital Loop 56 Kbps - Zone 1 | | 1 | UDL | UDL56 | 25.32 | 489.04 | 337.51 | | | | | 26.94 | 12.76 | 0.00 | 0.00 |
| | | 4 Wire Unbundled Digital Loop 56 Kbps - Zone 2 | | 2 | UDL | UDL56 | 43.11 | 489.04 | 337.51 | | | | | 26.94 | 12.76 | 0.00 | 0.00 |
| | | 4 Wire Unbundled Digital Loop 56 Kbps - Zone 3 | | 3 | UDL | UDL56 | 67.26 | 489.04 | 337.51 | | | | | 26.94 | 12.76 | 0.00 | 0.00 |
| | | Order Coordination for Specified Conversion Time (per LSR) | | | UDL | OCOSL | | 45.34 | | | | | | | | | |
| | | 4 Wire Unbundled Digital Loop 64 Kbps - Zone 1 | | 1 | UDL | UDL64 | 25.32 | 489.04 | 337.51 | | | | | 26.94 | 12.76 | 0.00 | 0.00 |
| | | 4 Wire Unbundled Digital Loop 64 Kbps - Zone 2 | | 2 | UDL | UDL64 | 43.11 | 489.04 | 337.51 | | | | | 26.94 | 12.76 | 0.00 | 0.00 |
| | | 4 Wire Unbundled Digital Loop 64 Kbps - Zone 3 | | 3 | UDL | UDL64 | 67.26 | 489.04 | 337.51 | | | | | 26.94 | 12.76 | 0.00 | 0.00 |
| | | Order Coordination for Specified Conversion Time (per LSR) | | | UDL | OCOSL | | 45.34 | | | | | | | | | |
| | | CLEC to CLEC Conversion Charge without outside dispatch | | | UDL | UREWO | | 102.03 | 49.70 | | | | | 26.94 | 12.76 | 0.00 | 0.00 |
| | **2-WIRE Unbundled COPPER LOOP** | | | | | | | | | | | | | | | | |
| | | 2-Wire Unbundled Copper Loop-Designed including manual service inquiry & facility reservation - Zone 1 | | 1 | UCL | UCLPB | 13.26 | 262.86 | 143.75 | | | | | 26.94 | 12.76 | 0.00 | 0.00 |
| | | 2-Wire Unbundled Copper Loop-Designed including manual service inquiry & facility reservation - Zone 2 | | 2 | UCL | UCLPB | 22.39 | 262.86 | 143.75 | | | | | 26.94 | 12.76 | 0.00 | 0.00 |
| | | 2 Wire Unbundled Copper Loop-Designed including manual service inquiry & facility reservation - Zone 3 | | 3 | UCL | UCLPB | 34.80 | 262.86 | 143.75 | | | | | 26.94 | 12.76 | 0.00 | 0.00 |
| | | Order Coordination for Unbundled Copper Loops (per loop) | | | UCL | UCLMC | | 61.38 | 61.38 | | | | | | | | |
| | | 2-Wire Unbundled Copper Loop-Designed without manual service inquiry and facility reservation - Zone 1 | | 1 | UCL | UCLPW | 13.26 | 188.39 | 112.96 | | | | | 26.94 | 12.76 | 0.00 | 0.00 |
| | | 2-Wire Unbundled Copper Loop-Designed without manual service inquiry and facility reservation - Zone 2 | | 2 | UCL | UCLPW | 22.39 | 188.39 | 112.96 | | | | | 26.94 | 12.76 | 0.00 | 0.00 |
| | | 2-Wire Unbundled Copper Loop-Designed without manual service inquiry and facility reservation - Zone 3 | | 3 | UCL | UCLPW | 34.80 | 188.39 | 112.96 | | | | | 26.94 | 12.76 | 0.00 | 0.00 |
| | | Order Coordination for Unbundled Copper Loops (per loop) | | | UCL | UCLMC | | 61.38 | 61.38 | | | | | | | | |
| | | CLEC to CLEC Conversion Charge without outside dispatch (UCL-Des) | | | UCL | UREWO | | 97.14 | 42.44 | | | | | 26.94 | 12.76 | 0.00 | 0.00 |
| | **4-WIRE COPPER LOOP** | | | | | | | | | | | | | | | | |
| | | 4-Wire Copper Loop including manual service inquiry and facility reservation - Zone 1 | | 1 | UCL | UCL4S | 17.36 | 311.03 | 191.93 | | | | | 26.94 | 12.76 | 0.00 | 0.00 |
| | | 4-Wire Copper Loop including manual service inquiry and facility reservation - Zone 2 | | 2 | UCL | UCL4S | 29.61 | 311.03 | 191.93 | | | | | 26.94 | 12.76 | 0.00 | 0.00 |
| | | 4-Wire Copper Loop including manual service inquiry and facility reservation - Zone 3 | | 3 | UCL | UCL4S | 46.26 | 311.03 | 191.93 | | | | | 26.94 | 12.76 | 0.00 | 0.00 |
| | | Order Coordination for Unbundled Copper Loops (per loop) | | | UCL | UCLMC | | 61.38 | 61.38 | | | | | | | | |
| | | 4-Wire Copper Loop without manual service inquiry and facility reservation - Zone 1 | | 1 | UCL | UCL4W | 17.36 | 236.57 | 161.14 | | | | | 26.94 | 12.76 | 0.00 | 0.00 |
| | | 4-Wire Copper Loop without manual service inquiry and facility reservation - Zone 2 | | 2 | UCL | UCL4W | 29.61 | 236.57 | 161.14 | | | | | 26.94 | 12.76 | 0.00 | 0.00 |
| | | 4-Wire Copper Loop without manual service inquiry and facility reservation - Zone 3 | | 3 | UCL | UCL4W | 46.26 | 236.57 | 161.14 | | | | | 26.94 | 12.76 | 0.00 | 0.00 |
| | | Order Coordination for Unbundled Copper Loops (per loop) | | | UCL | UCLMC | | 61.38 | 61.38 | | | | | | | | |
| | | CLEC to CLEC Conversion Charge without outside dispatch (UCL-Des) | | | UCL | UREWO | | 97.14 | 42.44 | | | | | | | | |
| **LOOP MODIFICATION** | | | | | | | | | | | | | | | | | |
| | | Unbundled Loop Modification, Removal of Load Coils - 2 Wire pair less than or equal to 18k ft, per Unbundled Loop | | | UAL, UHL, UCL, UEQ, ULS, UEA, UEANL, UEPSR, UEPSB | ULM2L | | 21.24 | 21.24 | | | | | 26.94 | 12.76 | 0.00 | 0.00 |
| | | Unbundled Loop Modification Removal of Load Coils - 4 Wire less than or equal to 18K ft, per Unbundled Loop | | | UHL, UCL, UEA | ULM4L | | 21.24 | 21.24 | | | | | 26.94 | 12.76 | 0.00 | 0.00 |
| | | Unbundled Loop Modification Removal of Bridged Tap Removal, per unbundled loop | | | UAL, UHL, UCL, UEQ, ULS, UEA, UEANL, UEPSR, UEPSB | ULMBT | | 24.84 | 24.84 | | | | | 26.94 | 12.76 | 0.00 | 0.00 |
| **SUB-LOOPS** | | | | | | | | | | | | | | | | | |
| | **Sub-Loop Distribution** | | | | | | | | | | | | | | | | |

| UNBUNDLED NETWORK ELEMENTS - North Carolina | | | | | | | | | | | | | | Attachment: 2 | | Exhibit: A | |
|---|---|---|---|---|---|---|---|---|---|---|---|---|---|---|---|---|---|
| CATEGORY | | RATE ELEMENTS | Interim | Zone | BCS | USOC | RATES ($) | | | | | Svc Order Submitted Elec per LSR | Svc Order Submitted Manually per LSR | Incremental Charge - Manual Svc Order vs. Electronic-1st | Incremental Charge - Manual Svc Order vs. Electronic-Add'l | Incremental Charge - Manual Svc Order vs. Electronic-Disc 1st | Incremental Charge - Manual Svc Order vs. Electronic-Disc Add'l |
| | | | | | | | Rec | Nonrecurring | | Nonrecurring Disconnect | | OSS Rates ($) | | | | | |
| | | | | | | | | First | Add'l | First | Add'l | SOMEC | SOMAN | SOMAN | SOMAN | SOMAN | SOMAN |
| | | Sub-Loop - Per Cross Box Location - CLEC Feeder Facility Set-Up | I | | UEANL | USBSA | | 373.57 | | | | | | 26.94 | 12.76 | 0.00 | 0.00 |
| | | Sub-Loop - Per Cross Box Location - Per 25 Pair Panel Set-Up | I | | UEANL | USBSB | | 33.78 | | | | | | 26.94 | 12.76 | 0.00 | 0.00 |
| | | Sub-Loop - Per Building Equipment Room - CLEC Feeder Facility Set-Up | I | | UEANL | USBSC | | 234.76 | | | | | | 26.94 | 12.76 | 0.00 | 0.00 |
| | | Sub-Loop - Per Building Equipment Room - Per 25 Pair Panel Set-Up | I | | UEANL | USBSD | | 81.05 | | | | | | 26.94 | 12.76 | 0.00 | 0.00 |
| | | Sub-Loop Distribution Per 2-Wire Analog Voice Grade Loop - Zone 1 | I | 1 | UEANL | USBN2 | 7.31 | 126.03 | 54.54 | | | | | 26.94 | 12.76 | 0.00 | 0.00 |
| | | Sub-Loop Distribution Per 2-Wire Analog Voice Grade Loop - Zone 2 | I | 2 | UEANL | USBN2 | 11.93 | 126.03 | 54.54 | | | | | 26.94 | 12.76 | 0.00 | 0.00 |
| | | Sub-Loop Distribution Per 2-Wire Analog Voice Grade Loop - Zone 3 | I | 3 | UEANL | USBN2 | 18.20 | 126.03 | 54.54 | | | | | 26.94 | 12.76 | 0.00 | 0.00 |
| | | Order Coordination for Unbundled Sub-Loops, per sub-loop pair | | | UEANL | USBMC | | 61.38 | 61.38 | | | | | | | | |
| | | Sub-Loop Distribution Per 4-Wire Analog Voice Grade Loop - Zone 1 | | 1 | UEANL | USBN4 | 8.44 | 156.52 | 79.66 | | | | | 26.94 | 12.76 | 0.00 | 0.00 |
| | | Sub-Loop Distribution Per 4-Wire Analog Voice Grade Loop - Zone 2 | | 2 | UEANL | USBN4 | 13.81 | 156.52 | 79.66 | | | | | 26.94 | 12.76 | 0.00 | 0.00 |
| | | Sub-Loop Distribution Per 4-Wire Analog Voice Grade Loop - Zone 3 | | 3 | UEANL | USBN4 | 21.10 | 156.52 | 79.66 | | | | | 26.94 | 12.76 | 0.00 | 0.00 |
| | | Order Coordination for Unbundled Sub-Loops, per sub-loop pair | | | UEANL | USBMC | | 61.38 | 61.38 | | | | | | | | |
| | | Sub-Loop 2-Wire Intrabuilding Network Cable (INC) | I | | UEANL | USBR2 | 2.79 | 114.05 | 37.20 | | | | | 26.94 | 12.76 | 0.00 | 0.00 |
| | | Order Coordination for Unbundled Sub-Loops, per sub-loop pair | | | UEANL | USBMC | | 61.38 | 61.38 | | | | | | | | |
| | | Sub-Loop 4-Wire Intrabuilding Network Cable (INC) | I | | UEANL | USBR4 | 3.74 | 127.67 | 50.82 | | | | | 26.94 | 12.76 | 0.00 | 0.00 |
| | | Order Coordination for Unbundled Sub-Loops, per sub-loop pair | | | UEANL | USBMC | | 61.38 | 61.38 | | | | | | | | |
| | | Loop Testing - Basic 1st Half Hour | | | UEANL | URET1 | | 76.24 | 76.24 | | | | | | | | |
| | | Loop Testing - Basic Additional Half Hour | | | UEANL | URETA | | 39.51 | 39.51 | | | | | | | | |
| | | 2 Wire Copper Unbundled Sub-Loop Distribution - Zone 1 | I | 1 | UEF | UCS2X | 6.10 | 137.10 | 60.24 | | | | | 26.94 | 12.76 | 0.00 | 0.00 |
| | | 2 Wire Copper Unbundled Sub-Loop Distribution - Zone 2 | I | 2 | UEF | UCS2X | 9.70 | 137.10 | 60.24 | | | | | 26.94 | 12.76 | 0.00 | 0.00 |
| | | 2 Wire Copper Unbundled Sub-Loop Distribution - Zone 3 | I | 3 | UEF | UCS2X | 14.59 | 137.10 | 60.24 | | | | | 26.94 | 12.76 | 0.00 | 0.00 |
| | | Order Coordination for Unbundled Sub-Loops, per sub-loop pair | | | UEF | USBMC | | 61.38 | 61.38 | | | | | | | | |
| | | 4 Wire Copper Unbundled Sub-Loop Distribution - Zone 1 | I | 1 | UEF | UCS4X | 6.58 | 162.24 | 85.38 | | | | | 26.94 | 12.76 | 0.00 | 0.00 |
| | | 4 Wire Copper Unbundled Sub-Loop Distribution - Zone 2 | I | 2 | UEF | UCS4X | 10.51 | 162.24 | 85.38 | | | | | 26.94 | 12.76 | 0.00 | 0.00 |
| | | 4 Wire Copper Unbundled Sub-Loop Distribution - Zone 3 | I | 3 | UEF | UCS4X | 15.84 | 162.24 | 85.38 | | | | | 26.94 | 12.76 | 0.00 | 0.00 |
| | | Order Coordination for Unbundled Sub-Loops, per sub-loop pair | | | UEF | USBMC | | 61.38 | 61.38 | | | | | | | | |
| | | Loop Testing - Basic 1st Half Hour | | | UEF | URET1 | | 76.24 | 76.24 | | | | | | | | |
| | | Loop Testing - Basic Additional Half Hour | | | UEF | URETA | | 39.51 | 39.51 | | | | | | | | |
| | **Unbundled Network Terminating Wire (UNTW)** | | | | | | | | | | | | | | | | |
| | | Unbundled Network Terminating Wire (UNTW) per Pair | | | UENTW | UENPP | 0.4351 | 64.98 | | | | | | 26.94 | 12.76 | 0.00 | 0.00 |
| | **Network Interface Device (NID)** | | | | | | | | | | | | | | | | |
| | | Network Interface Device (NID) - 1-2 lines | I | | UENTW | UND12 | | 86.37 | 56.69 | | | | | 26.94 | 12.76 | 0.00 | 0.00 |
| | | Network Interface Device (NID) - 1-6 lines | I | | UENTW | UND16 | | 127.93 | 98.21 | | | | | 26.94 | 12.76 | 0.00 | 0.00 |
| | | Network Interface Device Cross Connect - 2 W | I | | UENTW | UNDC2 | | 11.68 | 11.68 | | | | | 26.94 | 12.76 | 0.00 | 0.00 |
| | | Network Interface Device Cross Connect - 4W | I | | UENTW | UNDC4 | | 11.68 | 11.68 | | | | | 26.94 | 12.76 | 0.00 | 0.00 |
| **UNE OTHER, PROVISIONING ONLY - NO RATE** | | | | | | | | | | | | | | | | | |
| | | NID - Dispatch and Service Order for NID installation | | | UENTW | UNDBX | 0.00 | 0.00 | | | | | | | | | |
| | | UNTW Circuit Id Establishment, Provisioning Only - No Rate | | | UENTW | UENCE | 0.00 | 0.00 | | | | | | | | | |
| | | Unbundled Contract Name, Provisioning Only - No Rate | | | UEANL,UEF,UEQ,UENTW | UNECN | 0.00 | 0.00 | | | | | | | | | |
| **UNE OTHER, PROVISIONING ONLY - NO RATE** | | | | | | | | | | | | | | | | | |

| UNBUNDLED NETWORK ELEMENTS - North Carolina | | | | | | | | | | | | | | | Attachment: 2 | | Exhibit: A | |
|---|---|---|---|---|---|---|---|---|---|---|---|---|---|---|---|---|---|---|
| CATEGORY | | RATE ELEMENTS | Interim | Zone | BCS | USOC | RATES ($) | | | | | Svc Order Submitted Elec per LSR | Svc Order Submitted Manually per LSR | Incremental Charge - Manual Svc Order vs. Electronic-1st | Incremental Charge - Manual Svc Order vs. Electronic-Add'l | Incremental Charge - Manual Svc Order vs. Electronic-Disc 1st | Incremental Charge - Manual Svc Order vs. Electronic-Disc Add'l |
| | | | | | | | Rec | Nonrecurring | | Nonrecurring Disconnect | | OSS Rates ($) | | | | | |
| | | | | | | | | First | Add'l | First | Add'l | SOMEC | SOMAN | SOMAN | SOMAN | SOMAN | SOMAN |
| | | Unbundled Contact Name, Provisioning Only - no rate | | | UAL,UCL,UDC,UDL,UDN,UEA,UHL,ULC | UNECN | 0.00 | 0.00 | | | | | | | | | |
| | | Unbundled Sub-Loop Feeder-2 Wire Cross Box Jumper - no rate | | | UEA,UDN,UCL,UDC | USBFQ | 0.00 | 0.00 | | | | | | | | | |
| | | Unbundled Sub-Loop Feeder-4 Wire Cross Box Jumper - no rate | | | UEA,USL,UCL,UDL | USBFR | 0.00 | 0.00 | | | | | | | | | |
| | | Unbundled DS1 Loop - Superframe Format Option - no rate | | | USL | CCOSF | 0.00 | 0.00 | | | | | | | | | |
| | | Unbundled DS1 Loop - Expanded Superframe Format option - no rate | | | USL | CCOEF | 0.00 | 0.00 | | | | | | | | | |
| HIGH CAPACITY UNBUNDLED LOCAL LOOP | | | | | | | | | | | | | | | | | | |
| | | High Capacity Unbundled Local Loop - DS3 - Per Mile per month | | | UE3 | 1L5ND | 13.33 | | | | | | | | | | |
| | | High Capacity Unbundled Local Loop - DS3 - Facility Termination per month | | | UE3 | UE3PX | 450.69 | 1,071.00 | 646.12 | | | | | 53.48 | 53.48 | | |
| | | High Capacity Unbundled Local Loop - STS-1 - Per Mile per month | | | UDLSX | 1L5ND | 13.33 | | | | | | | | | | |
| | | High Capacity Unbundled Local Loop - STS-1 - Facility Termination per month | | | UDLSX | UDLS1 | 464.26 | 1,071.00 | 646.12 | | | | | 53.48 | 53.48 | | |
| LOOP MAKE-UP | | | | | | | | | | | | | | | | | | |
| | | Loop Makeup - Preordering Without Reservation, per working or spare facility queried (Manual). | | | UMK | UMKLW | | 55.44 | 55.44 | | | | | 19.99 | 19.99 | 19.99 | 19.99 |
| | | Loop Makeup - Preordering With Reservation, per spare facility queried (Manual). | | | UMK | UMKLP | | 55.73 | 55.73 | | | | | 19.99 | 19.99 | 19.99 | 19.99 |
| | | Loop Makeup--With or Without Reservation, per working or spare facility queried (Mechanized) | | | UMK | UMKMQ | | 0.6960821 | 0.6960821 | | | | | | | | |
| LINE SHARING AND LINE SPLITTING | | | | | | | | | | | | | | | | | | |
| | NOTE 1: The Line Sharing monthly recurring rates for all installations completed from October 02, 2003 through midnight October 01, 2004 shall be billed as follows: | | | | | | | | | | | | | | | | | |
| | NOTE 1: 10/02/2003 – 10/01/2004: 25% of the rate for an unbundled copper loop non-designed ("UCLND") | | | | | | | | | | | | | | | | | |
| | NOTE 1: 10/02/2004 – 10/01/2005: 50% of the rate for UCLND | | | | | | | | | | | | | | | | | |
| | NOTE 1: 10/02/2005 – 10/01/2006: 75% of the rate for UCLND | | | | | | | | | | | | | | | | | |
| | NOTE 1: Above will apply to USOCS: ULSDT and ULSCT | | | | | | | | | | | | | | | | | |
| | **NOTE 2: The Line Sharing monthly recurring rates with USOCs ULSDC and ULSCC applies only to circuits installed and inservice on or before October 1, 2003 | | | | | | | | | | | | | | | | | |
| | LINE SHARING | | | | | | | | | | | | | | | | | |
| | SPLITTERS-CENTRAL OFFICE BASED | | | | | | | | | | | | | | | | | |
| | | Line Sharing Splitter, per System 96 Line Capacity | | | ULS | ULSDA | 181.18 | 631.54 | 0.00 | | | | | 26.94 | 12.76 | | |
| | | Line Sharing Splitter, per System 24 Line Capacity | | | ULS | ULSDB | 38.99 | 631.54 | 0.00 | | | | | 26.94 | 12.76 | | |
| | | Line Sharing Splitter, Per System, 8 Line Capacity | | | ULS | ULSD8 | 12.73 | 424.61 | 0.00 | | | | | 26.94 | 12.76 | | |
| | | Line Sharing-DLEC Owned Splitter in CO-CFA activaton-deactivation (per LSOD) | | | ULS | ULSDG | | 146.32 | 31.27 | | | | | 26.94 | 12.76 | | |
| | END USER ORDERING-CENTRAL OFFICE BASED LINE SHARING | | | | | | | | | | | | | | | | | |
| | | Line Sharing - per Line Activation (BST Owned splitter) - OBSOLETE see **NOTE 2 | | | ULS | ULSDC | 0.61 | 54.71 | 28.77 | | | | | 26.94 | 12.76 | | |
| | | Line Share Service, TRO per line activation, BST owned splitter - Central Office Located (25% of UCLND) - please see NOTE 1 (E:10/2/2003) | | | ULS | ULSDT | 3.49 | 54.71 | 28.77 | | | | | | | | |
| | | Line Share Service, TRO per line activation, BST owned splitter - Central Office Located (50% of UCLND) - please see NOTE 1 (E:10/2/2004) | | | ULS | ULSDT | 6.99 | 54.71 | 28.77 | | | | | | | | |
| | | Line Share Service, TRO per line activation, BST owned splitter - Central Office Located (75% of UCLND) - please see NOTE 1 (E:10/2/2005) | | | ULS | ULSDT | 10.48 | 54.71 | 28.77 | | | | | | | | |
| | | Line Sharing - per Subsequent Activity per Line Rearrangement(BST Owned Splitter | | | ULS | ULSDS | | 35.42 | 16.57 | | | | | 26.94 | 12.76 | | |
| | | Line Sharing - per Subsequent Activity per Line Rearrangement(DLEC Owned Splitter | | | ULS | ULSCS | | 35.14 | 16.29 | | | | | 26.94 | 12.76 | | |
| | | Line Sharing - per Line Activation (DLEC owned Splitter) - OBSOLETE see **NOTE 2 | | | ULS | ULSCC | 0.61 | 47.44 | 19.31 | | | | | 26.94 | 12.76 | | |

| UNBUNDLED NETWORK ELEMENTS - North Carolina | | | | | | | | | | | | | | Attachment: 2 | | Exhibit: A | |
|---|---|---|---|---|---|---|---|---|---|---|---|---|---|---|---|---|---|
| CATEGORY | | RATE ELEMENTS | Interim | Zone | BCS | USOC | RATES ($) | | | | | Svc Order Submitted Elec per LSR | Svc Order Submitted Manually per LSR | Incremental Charge - Manual Svc Order vs. Electronic-1st | Incremental Charge - Manual Svc Order vs. Electronic-Add'l | Incremental Charge - Manual Svc Order vs. Electronic-Disc 1st | Incremental Charge - Manual Svc Order vs. Electronic-Disc Add'l |
| | | | | | | | Rec | Nonrecurring | | Nonrecurring Disconnect | | OSS Rates ($) | | | | | |
| | | | | | | | | First | Add'l | First | Add'l | SOMEC | SOMAN | SOMAN | SOMAN | SOMAN | SOMAN |
| | | Line Share Service, TRO per line activation, CLEC owned splitter - Central Office Located (25% of UCLND) - please see NOTE 1 (E:10/2/2003) | | | ULS | ULSCT | 3.49 | 47.44 | 19.31 | | | | | | | | |
| | | Line Share Service, TRO per line activation, CLEC owned splitter - Central Office Located (50% of UCLND) - please see NOTE 1 (E:10/2/2004) | | | ULS | ULSCT | 6.99 | 47.44 | 19.31 | | | | | | | | |
| | | Line Share Service, TRO per line activation, CLEC owned splitter - Central Office Located (75% of UCLND) - please see NOTE 1 (E:10/2/2005) | | | ULS | ULSCT | 10.48 | 47.44 | 19.31 | | | | | | | | |
| | LINE SPLITTING | | | | | | | | | | | | | | | | |
| | END USER ORDERING-CENTRAL OFFICE BASED | | | | | | | | | | | | | | | | |
| | | Line Splitting - per line activation DLEC owned splitter | | | UEPSR UEPSB | UREOS | 0.61 | | | | | | | | | | |
| | | Line Splitting - per line activation BST owned - physical | | | UEPSR UEPSB | UREBP | 0.61 | 56.92 | 28.59 | | | | | 26.94 | 12.76 | | |
| | | Line Splitting - per line activation BST owned - virtual | | | UEPSR UEPSB | UREBV | 0.61 | 56.92 | 28.59 | | | | | 26.94 | 12.76 | | |
| | MAINTENANCE | | | | | | | | | | | | | | | | |
| | | No Trouble Found - per 1/2 hour increments - Basic | | | | | | 80.00 | 55.00 | | | | | | | | |
| | | No Trouble Found - per 1/2 hour increments - Overtime | | | | | | 120.00 | 82.50 | | | | | | | | |
| | | No Trouble Found - per 1/2 hour increments - Premium | | | | | | 160.00 | 110.00 | | | | | | | | |
| UNBUNDLED DEDICATED TRANSPORT | | | | | | | | | | | | | | | | | |
| | INTEROFFICE CHANNEL - DEDICATED TRANSPORT | | | | | | | | | | | | | | | | |
| | | Interoffice Channel - Dedicated Transport - 2-Wire Voice Grade - Per Mile per month | | | U1TVX | 1L5XX | 0.0125 | | | | | | | | | | |
| | | Interoffice Channel - Dedicated Transport- 2- Wire Voice Grade - Facility Termination | | | U1TVX | U1TV2 | 18.00 | 137.48 | 52.58 | | | | | 38.07 | 38.07 | | |
| | | Interoffice Channel - Dedicated Transpor t- 2-Wire Volce Grade Rev Bat. - Per Mile per month | | | U1TVX | 1L5XX | 0.0125 | | | | | | | | | | |
| | | Interoffice Channel - Dedicated Transport- 2- Wire VG Rev Bat. - Facility Termination | | | U1TVX | U1TR2 | 18.00 | 137.48 | 52.58 | | | | | 38.07 | 38.07 | | |
| | | Interoffice Channel - Dedicated Transport - 4-Wire Voice Grade - Per Mile per month | | | U1TVX | 1L5XX | 0.0125 | | | | | | | | | | |
| | | Interoffice Channel - Dedicated Transport - 4- Wire Voice Grade - Facility Termination | | | U1TVX | U1TV4 | 22.16 | 106.11 | 65.95 | | | | | 22.32 | 22.32 | | |
| | | Interoffice Channel - Dedicated Transport - 56 kbps - per mile per month | | | U1TDX | 1L5XX | 0.0282 | | | | | | | | | | |
| | | Interoffice Channel - Dedicated Transport - 56 kbps - Facility Termination | | | U1TDX | U1TD5 | 17.40 | 137.48 | 52.58 | | | | | 38.07 | 38.07 | | |
| | | Interoffice Channel - Dedicated Transport - 64 kbps - per mile per month | | | U1TDX | 1L5XX | 0.0282 | | | | | | | | | | |
| | | Interoffice Channel - Dedicated Transport - 64 kbps - Facility Termination | | | U1TDX | U1TD6 | 17.40 | 137.48 | 52.58 | | | | | 38.07 | 38.07 | | |
| | | Interoffice Channel - Dedicated Channel - DS1 - Per Mile per month | | | U1TD1 | 1L5XX | 0.5753 | | | | | | | | | | |
| | | Interoffice Channel - Dedicated Tranport - DS1 - Facility Termination | | | U1TD1 | U1TF1 | 71.29 | 217.17 | 163.75 | | | | | 38.07 | 38.07 | | |
| | | Interoffice Channel - Dedicated Transport - DS3 - Per Mile per month | | | U1TD3 | 1L5XX | 12.98 | | | | | | | | | | |
| | | Interoffice Channel - Dedicated Transport - DS3 - Facility Termination per month | | | U1TD3 | U1TF3 | 720.38 | 794.94 | 579.55 | | | | | 91.26 | 91.26 | | |
| | | Interoffice Channel - Dedicated Transport - STS-1 - Per Mile per month | | | U1TS1 | 1L5XX | 6.14 | | | | | | | | | | |
| | | Interoffice Channel - Dedicated Transport - STS-1 - Facility Termination | | | U1TS1 | U1TFS | 790.37 | 642.23 | 408.89 | | | | | 53.48 | 53.48 | | |
| DARK FIBER | | | | | | | | | | | | | | | | | |
| | | Dark Fiber, Four Fiber Strands, Per Route Mile or Fraction Thereof per month - Interoffice Channel | | | UDF, UDFCX | 1L5DF | 27.71 | | | | | | | | | | |
| | | NRC Dark Fiber - Interoffice Channel | | | UDF, UDFCX | UDF14 | | 1,807.00 | 562.96 | | | | | | | | |
| | | Dark Fiber, Four Fiber Strands, Per Route Mile or Fraction Thereof per month - Local Loop | | | UDF, UDFCX | 1L5DL | 64.04 | | | | | | | | | | |
| | | NRC Dark Fiber - Local Loop | | | UDF, UDFCX | UDFL4 | | 1,347.00 | 279.87 | | | | | | | | |

| UNBUNDLED NETWORK ELEMENTS - North Carolina | | | | | | | | | | | | | Attachment: 2 | | Exhibit: A | |
|---|---|---|---|---|---|---|---|---|---|---|---|---|---|---|---|---|
| CATEGORY | | RATE ELEMENTS | Interim | Zone | BCS | USOC | RATES ($) | | | | | Svc Order Submitted Elec per LSR | Svc Order Submitted Manually per LSR | Incremental Charge - Manual Svc Order vs. Electronic- 1st | Incremental Charge - Manual Svc Order vs. Electronic- Add'l | Incremental Charge - Manual Svc Order vs. Electronic- Disc 1st | Incremental Charge - Manual Svc Order vs. Electronic- Disc Add'l |
| | | | | | | | | Nonrecurring | | Nonrecurring Disconnect | | OSS Rates ($) | | | | | |
| | | | | | | | Rec | First | Add'l | First | Add'l | SOMEC | SOMAN | SOMAN | SOMAN | SOMAN | SOMAN |
| 8XX ACCESS TEN DIGIT SCREENING | | | | | | | | | | | | | | | | | |
| | | 8XX Access Ten Digit Screening, Per Call | | | OHD | | 0.0005 | | | | | | | | | | |
| | | 8XX Access Ten Digit Screening, Reservation Charge Per 8XX Number Reserved | | | OHD | N8R1X | | 7.05 | 0.96 | | | | | 26.94 | | | |
| | | 8XX Access Ten Digit Screening, Per 8XX No. Established W/O POTS Translations | | | OHD | | | 23.82 | 2.73 | | | | | 41.35 | | | |
| | | 8XX Access Ten Digit Screening, Per 8XX No. Established With POTS Translations | | | OHD | N8FTX | | 23.82 | 2.73 | | | | | 41.35 | | | |
| | | 8XX Access Ten Digit Screening, Customized Area of Service Per 8XX Number | | | OHD | N8FCX | | 5.63 | 2.82 | | | | | | | | |
| | | 8XX Access Ten Digit Screening, Multiple InterLATA CXR Routing Per CXR Requested Per 8XX No. | | | OHD | N8FMX | | 6.59 | 3.77 | | | | | | | | |
| | | 8XX Access Ten Digit Screening, Change Charge Per Request | | | OHD | N8FAX | | 8.01 | 0.96 | | | | | 26.94 | | | |
| | | 8XX Access Ten Digit Screening, Call Handling and Destination Features | | | OHD | N8FDX | | 5.63 | | | | | | | | | |
| LINE INFORMATION DATA BASE ACCESS (LIDB) | | | | | | | | | | | | | | | | | |
| | | LIDB Common Transport Per Query | | | OQT | | 0.00003 | | | | | | | | | | |
| | | LIDB Validation Per Query | | | OQU | | 0.0134 | | | | | | | | | | |
| | | LIDB Originating Point Code Establishment or Change | | | OQT, OQU | NRBPX | | 62.26 | | | | | | 26.94 | 26.94 | | |
| SIGNALING (CCS7) | | | | | | | | | | | | | | | | | |
| | | CCS7 Signaling Connection, Per link (A link) | | | UDB | TPP++ | 18.22 | 278.02 | 278.02 | | | | | 41.35 | 41.35 | | |
| | | CCS7 Signaling Connection, Per link (B link) (also known as D link) | | | UDB | TPP++ | 18.22 | 278.02 | 278.02 | | | | | 41.35 | 41.35 | | |
| | | CCS7 Signaling Termination, Per STP Port | | | UDB | PT8SX | 132.83 | | | | | | | | | | |
| | | CCS7 Signaling Usage, Per ISUP Message | | | UDB | | 0.00004 | | | | | | | | | | |
| | | CCS7 Signaling Usage, Per TCAP Message | | | UDB | | 0.00009 | | | | | | | | | | |
| | | CCS7 Signaling Usage Surrogate, per link per LATA | | | UDB | STU56 | 338.98 | | | | | | | | | | |
| | | CCS7 Signaling Point Code, per Originating Point Code Establishment or Change, per STP affected | | | UDB | CCAPO | | 40.00 | 40.00 | | | | | 19.99 | 19.99 | | |
| | | CCS7 Signaling Point Code, per Destination Point Code Establishment or Change, Per Stp Affected | | | UDB | CCAPD | | 8.00 | 8.00 | | | | | 19.99 | 19.99 | | |
| E911 SERVICE | | | | | | | | | | | | | | | | | |
| | | Local Channel - Dedicated - 2-wr Voice Grade - Zone 1 | | 1 | | | 11.24 | 553.80 | 89.69 | | | | | 42.17 | 12.76 | | |
| | | Local Channel - Dedicated - 2-wr Voice Grade - Zone 2 | | 2 | | | 19.91 | 553.80 | 89.69 | | | | | 42.17 | 12.76 | | |
| | | Local Channel - Dedicated - 2-wr Voice Grade - Zone 3 | | 3 | | | 31.70 | 553.80 | 89.69 | | | | | 42.17 | 12.76 | | |
| | | Interoffice Transport - Dedicated - 2-wr Voice Grade Per Mile | | | | | 0.0282 | | | | | | | | | | |
| | | Interoffice Transport - Dedicated - 2-wr Voice Grade Per Facility Termination | | | | | 18.00 | 137.48 | 52.58 | | | | | 38.07 | 38.07 | | |
| | | Local Channel - Dedicated - DS1 - Zone 1 | | 1 | | | 27.05 | 534.48 | 462.69 | | | | | 86.15 | 1.77 | | |
| | | Local Channel - Dedicated - DS1 - Zone 2 | | 2 | | | 47.94 | 534.48 | 462.69 | | | | | 86.15 | 1.77 | | |
| | | Local Channel - Dedicated - DS1 - Zone 3 | | 3 | | | 76.32 | 534.48 | 462.69 | | | | | 86.15 | 1.77 | | |
| | | Interoffice Transport - Dedicated - DS1 Per Mile | | | | | 0.5753 | | | | | | | | | | |
| | | Interoffice Transport - Dedicated - DS1 Per Facility Termination | | | | | 71.29 | 217.17 | 163.75 | | | | | 38.07 | 38.07 | | |
| CALLING NAME (CNAM) SERVICE | | | | | | | | | | | | | | | | | |
| | | CNAM For DB Owners - Service Establishment | | | OQV | | | 75.62 | | | | | | | | | |
| | | CNAM For Non DB Owners - Service Establishment | | | OQV | | | 75.62 | | | | | | | | | |
| | | CNAM For DB Owners - Service Provisioning With Point Code Establishment (Initial) | | | OQV | | | 2,354.00 | 2,354.00 | | | | | | | | |
| | | CNAM For DB Owners - Service Provisioning With Point Code Establishment (Subsequent) | | | OQV | | | 1,739.00 | 1,739.00 | | | | | | | | |
| | | CNAM For Non DB Owners - Service Provisioning With Point Code Establishment (Initial) | | | OQV | | | 1,072.00 | 1,072.00 | | | | | | | | |
| | | CNAM For Non DB Owners - Service Provisioning With Point Code Establishment (Subsequent) | | | OQV | | | 768.44 | 768.44 | | | | | | | | |
| | | CNAM for DB & Non DB Owners, Per Query | | | OQV | | 0.0009592 | | | | | | | | | | |
| SELECTIVE ROUTING | | | | | | | | | | | | | | | | | |
| | | Selective Routing Per Unique Line Class Code Per Request Per Switch | | | | | | 188.59 | | | | | | 26.94 | 12.76 | | |

| UNBUNDLED NETWORK ELEMENTS - North Carolina | | | | | | | | | | | | | | Attachment: 2 | | Exhibit: A | |
|---|---|---|---|---|---|---|---|---|---|---|---|---|---|---|---|---|---|
| CATEGORY | RATE ELEMENTS | Interim | Zone | BCS | USOC | RATES ($) | | | | | Svc Order Submitted Elec per LSR | Svc Order Submitted Manually per LSR | Incremental Charge - Manual Svc Order vs. Electronic-1st | Incremental Charge - Manual Svc Order vs. Electronic-Add'l | Incremental Charge - Manual Svc Order vs. Electronic-Disc 1st | Incremental Charge - Manual Svc Order vs. Electronic-Disc Add'l |
| | | | | | | Rec | Nonrecurring | | Nonrecurring Disconnect | | | | OSS Rates ($) | | | |
| | | | | | | | First | Add'l | First | Add'l | SOMEC | SOMAN | SOMAN | SOMAN | SOMAN | SOMAN |
| VIRTUAL COLLOCATION | | | | | | | | | | | | | | | | |
| | Virtual Collocation-2 Wire Cross Connects (Loop) for Line Splitting | | | UEPSR UEPSB | VE1LS | 0.0287 | 33.96 | 32.08 | 0.00 | 0.00 | | | 19.99 | 19.99 | | |
| PHYSICAL COLLOCATION | | | | | | | | | | | | | | | | |
| | Physical Collocation-2 Wire Cross Connects (Loop) for Line Splitting | | | UEPSR UEPSB | PE1LS | 0.0309 | 33.53 | 31.65 | 0.00 | 0.00 | | | 19.99 | 19.99 | | |
| AIN SELECTIVE CARRIER ROUTING | | | | | | | | | | | | | | | | |
| | Regional Service Establishment | | | SRC | SRCEC | | 215,597.00 | | | | | | | | | |
| | End Office Establishment | | | SRC | SRCEO | | 347.27 | | | | | | | | | |
| | Query NRC, per query | | | SRC | | 0.0053758 | | | | | | | | | | |
| AIN - BELLSOUTH AIN SMS ACCESS SERVICE | | | | | | | | | | | | | | | | |
| | AIN SMS Access Service - Service Establishment, Per State, Initial Setup | | | A1N | CAMSE | | 294.77 | | | | | | | | | |
| | AIN SMS Access Service - Port Connection - Dial/Shared Access | | | A1N | CAMDP | | 86.94 | | | | | | | | | |
| | AIN SMS Access Service - Port Connection - ISDN Access | | | A1N | CAM1P | | 86.94 | | | | | | | | | |
| | AIN SMS Access Service - User Identification Codes - Per User ID Code | | | A1N | CAMAU | | 200.83 | | | | | | | | | |
| | AIN SMS Access Service - Security Card, Per User ID Code, Initial or Replacement | | | A1N | CAMRC | | 172.05 | | | | | | | | | |
| | AIN SMS Access Service - Storage, Per Unit (100 Kilobytes) | | | | | 0.0023 | | | | | | | | | | |
| | AIN SMS Access Service - Session, Per Minute | | | | | 0.0791 | | | | | | | | | | |
| | AIN SMS Access Service - Company Performed Session, Per Minute | | | | | 2.08 | | | | | | | | | | |
| AIN - BELLSOUTH AIN TOOLKIT SERVICE | | | | | | | | | | | | | | | | |
| | AIN Toolkit Service - Service Establishment Charge, Per State, Initial Setup | | | CAM | BAPSC | | 290.05 | | | | | | | | | |
| | AIN Toolkit Service - Training Session, Per Customer | | | | BAPVX | | 8,363.00 | | | | | | | | | |
| | AIN Toolkit Service - Trigger Access Charge, Per Trigger, Per DN, Term. Attempt | | | | BAPTT | | 72.76 | | | | | | | | | |
| | AIN Toolkit Service - Trigger Access Charge, Per Trigger, Per DN, Off-Hook Delay | | | | BAPTD | | 72.76 | | | | | | | | | |
| | AIN Toolkit Service - Trigger Access Charge, Per Trigger, Per DN, Off-Hook Immediate | | | | BAPTM | | 72.76 | | | | | | | | | |
| | AIN Toolkit Service - Trigger Access Charge, Per Trigger, Per DN, 10-Digit PODP | | | | BAPTO | | 149.95 | | | | | | | | | |
| | AIN Toolkit Service - Trigger Access Charge, Per Trigger, Per DN, CDP | | | | BAPTC | | 149.95 | | | | | | | | | |
| | AIN Toolkit Service - Trigger Access Charge, Per Trigger, Per DN, Feature Code | | | | BAPTF | | 149.95 | | | | | | | | | |
| | AIN Toolkit Service - Query Charge, Per Query | | | | | 0.02 | | | | | | | | | | |
| | AIN Toolkit Service - Type 1 Node Charge, Per AIN Toolkit Subscription, Per Node, Per Query | | | | | 0.005 | | | | | | | | | | |
| | AIN Toolkit Service - SCP Storage Charge, Per SMS Access Account, Per 100 Kilobytes | | | | | 1.45 | | | | | | | | | | |
| | AIN Toolkit Service - Monthly report - Per AIN Toolkit Service Subscription | | | CAM | BAPMS | 15.98 | 71.80 | | | | | | | | | |
| | AIN Toolkit Service - Special Study - Per AIN Toolkit Service Subscription | | | CAM | BAPLS | 0.08 | 47.20 | | | | | | | | | |
| | AIN Toolkit Service - Call Event Report - Per AIN Toolkit Service Subscription | | | CAM | BAPDS | 15.90 | 71.80 | | | | | | | | | |
| | AIN Toolkit Service - Call Event Special Study - Per AIN Toolkit Service Subscription | | | CAM | BAPES | 0.003 | 47.20 | | | | | | | | | |
| ENHANCED EXTENDED LINK (EELs) | | | | | | | | | | | | | | | | |
| | NOTE: The monthly recurring and non-recurring charges below will apply and the Switch-As-Is Charge will not apply for UNE combinations provisioned as ' Ordinarily Combined' Network Elements. | | | | | | | | | | | | | | | |
| | NOTE: The monthly recurring and the Switch-As-Is Charge and not the non-recurring charges below will apply for UNE combinations provisioned as ' Currently Combined' Network Elements. | | | | | | | | | | | | | | | |
| | EXTENTED 2-WIRE VOICE GRADE EXTENDED LOOP WITH DEDICATED DS1 INTEROFFICE TRANSPORT | | | | | | | | | | | | | | | |
| | First 2-Wire VG Loop (SL2) in Combination - Zone 1 | | 1 | UNCVX | UEAL2 | 14.97 | 142.97 | 106.56 | | | | | 38.07 | 38.07 | | |
| | First 2-Wire VG Loop (SL2) in Combination - Zone 2 | | 2 | UNCVX | UEAL2 | 25.93 | 142.97 | 106.56 | | | | | 38.07 | 38.07 | | |

| UNBUNDLED NETWORK ELEMENTS - North Carolina | | | | | | | | | | | | | | Attachment: 2 | | Exhibit: A | |
|---|---|---|---|---|---|---|---|---|---|---|---|---|---|---|---|---|---|
| CATEGORY | | RATE ELEMENTS | Interim | Zone | BCS | USOC | RATES ($) | | | | | Svc Order Submitted Elec per LSR | Svc Order Submitted Manually per LSR | Incremental Charge - Manual Svc Order vs. Electronic-1st | Incremental Charge - Manual Svc Order vs. Electronic-Add'l | Incremental Charge - Manual Svc Order vs. Electronic-Disc 1st | Incremental Charge - Manual Svc Order vs. Electronic-Disc Add'l |
| | | | | | | | Rec | Nonrecurring | | Nonrecurring Disconnect | | OSS Rates ($) | | | | | |
| | | | | | | | | First | Add'l | First | Add'l | SOMEC | SOMAN | SOMAN | SOMAN | SOMAN | SOMAN |
| | | First 2-Wire VG Loop (SL2) in Combination - Zone 3 | | 3 | UNCVX | UEAL2 | 40.81 | 142.97 | 106.56 | | | | | 38.07 | 38.07 | | |
| | | Interoffice Transport - Dedicated - DS1 combination - Per Mile per month | | | UNC1X | 1L5XX | 0.5753 | | | | | | | | | | |
| | | Interoffice Transport - Dedicated - DS1 combination - Facility Termination per month | | | UNC1X | U1TF1 | 71.29 | 217.17 | 163.75 | | | | | 38.07 | 38.07 | | |
| | | 1/0 Channelization System in combination Per Month | | | UNC1X | MQ1 | 146.69 | 197.78 | 140.06 | | | | | | | | |
| | | Voice Grade COCI - Per Month | | | UNCVX | 1D1VG | 1.27 | 13.09 | 9.38 | | | | | | | | |
| | | Each Additional 2-Wire VG Loop (SL 2) in Combination - Zone 1 | | 1 | UNCVX | UEAL2 | 14.97 | 142.97 | 106.56 | | | | | 38.07 | 38.07 | | |
| | | Each Additional 2-Wire VG Loop (SL 2) in Combination - Zone 2 | | 2 | UNCVX | UEAL2 | 25.93 | 142.97 | 106.56 | | | | | 38.07 | 38.07 | | |
| | | Each Additional 2-Wire VG Loop (SL 2) in Combination - Zone 3 | | 3 | UNCVX | UEAL2 | 40.81 | 142.97 | 106.56 | | | | | 38.07 | 38.07 | | |
| | | Voice Grade COCI - Per Month | | | UNCVX | 1D1VG | 1.27 | 13.09 | 9.38 | | | | | | | | |
| | | Nonrecurring Currently Combined Network Elements Switch -As-Is Charge | | | UNC1X | UNCCC | | 21.75 | 21.75 | 32.28 | 10.96 | | | 38.07 | 38.07 | | |
| | | **EXTENDED 4-WIRE VOICE GRADE EXTENDED LOOP WITH DEDICATED DS1 INTEROFFICE TRANSPORT** | | | | | | | | | | | | | | | |
| | | First 4-Wire Analog Voice Grade Loop in Combination - Zone 1 | | 1 | UNCVX | UEAL4 | 21.32 | 288.47 | 237.45 | | | | | 38.07 | 38.07 | | |
| | | First 4-Wire Analog Voice Grade Loop in Combination - Zone 2 | | 2 | UNCVX | UEAL4 | 36.27 | 288.47 | 237.45 | | | | | 38.07 | 38.07 | | |
| | | First 4-Wire Analog Voice Grade Loop in Combination - Zone 3 | | 3 | UNCVX | UEAL4 | 56.57 | 288.47 | 237.45 | | | | | 38.07 | 38.07 | | |
| | | Interoffice Transport - Dedicated - DS1 combination - Per Mile Per Month | | | UNC1X | 1L5XX | 0.5753 | | | | | | | | | | |
| | | Interoffice Transport - Dedicated - DS1 - Facility Termination Per Month | | | UNC1X | U1TF1 | 71.29 | 217.17 | 163.75 | | | | | 38.07 | 38.07 | | |
| | | 1/0 Channel System in combination Per Month | | | UNC1X | MQ1 | 146.69 | 197.78 | 140.06 | | | | | | | | |
| | | Voice Grade COCI in combination - per month | | | UNCVX | 1D1VG | 1.27 | 13.09 | 9.38 | | | | | | | | |
| | | Additional 4-Wire Analog Voice Grade Loop in same DS1 Interoffice Transport Combination - Zone 1 | | 1 | UNCVX | UEAL4 | 21.32 | 288.47 | 237.45 | | | | | 38.07 | 38.07 | | |
| | | Additional 4-Wire Analog Voice Grade Loop in same DS1 Interoffice Transport Combination - Zone 2 | | 2 | UNCVX | UEAL4 | 36.27 | 288.47 | 237.45 | | | | | 38.07 | 38.07 | | |
| | | Additional 4-Wire Analog Voice Grade Loop in same DS1 Interoffice Transport Combination - Zone 3 | | 3 | UNCVX | UEAL4 | 56.57 | 288.47 | 237.45 | | | | | 38.07 | 38.07 | | |
| | | Additional Voice Grade COCI in combination - per month | | | UNCVX | 1D1VG | 1.27 | 13.09 | 9.38 | | | | | | | | |
| | | Nonrecurring Currently Combined Network Elements Switch -As-Is Charge | | | UNC1X | UNCCC | | 21.75 | 21.75 | 32.28 | 10.96 | | | 38.07 | 38.07 | | |
| | | **EXTENDED 4-WIRE 56 KBPS EXTENDED DIGITAL LOOP WITH DEDICATED DS1 INTEROFFICE TRANSPORT** | | | | | | | | | | | | | | | |
| | | First 4-Wire 56Kbps Digital Grade Loop in Combination - Zone 1 | | 1 | UNCDX | UDL56 | 25.32 | 489.04 | 337.51 | | | | | 38.07 | 38.07 | | |
| | | First 4-Wire 56Kbps Digital Grade Loop in Combination - Zone 2 | | 2 | UNCDX | UDL56 | 43.11 | 489.04 | 337.51 | | | | | 38.07 | 38.07 | | |
| | | First 4-Wire 56Kbps Digital Grade Loop in Combination - Zone 3 | | 3 | UNCDX | UDL56 | 67.26 | 489.04 | 337.51 | | | | | 38.07 | 38.07 | | |
| | | Interoffice Transport - Dedicated - DS1 combination - Per Mile Per Month | | | UNC1X | 1L5XX | 0.5753 | | | | | | | | | | |
| | | Interoffice Transport - Dedicated - DS1 - combination Facility Termination Per Month | | | UNC1X | U1TF1 | 71.29 | 217.17 | 163.75 | | | | | 38.07 | 38.07 | | |
| | | 1/0 Channel System in combination Per Month | | | UNC1X | MQ1 | 146.69 | 197.78 | 140.06 | | | | | | | | |
| | | OCU-DP COCI (data) per month (2.4-64kbs) | | | UNCDX | 1D1DD | 2.00 | 15.76 | 11.28 | | | | | | | | |
| | | Additional 4-Wire 56Kbps Digital Grade Loop in same DS1 Interoffice Transport Combination - Zone 1 | | 1 | UNCDX | UDL56 | 25.32 | 489.04 | 337.51 | | | | | 38.07 | 38.07 | | |
| | | Additional 4-Wire 56Kbps Digital Grade Loop in same DS1 Interoffice Transport Combination - Zone 2 | | 2 | UNCDX | UDL56 | 43.11 | 489.04 | 337.51 | | | | | 38.07 | 38.07 | | |
| | | Additional 4-Wire 56Kbps Digital Grade Loop in same DS1 Interoffice Transport Combination - Zone 3 | | 3 | UNCDX | UDL56 | 67.26 | 489.04 | 337.51 | | | | | 38.07 | 38.07 | | |
| | | Additional OCU-DP COCI (data) - in combination per month (2.4-64kbs) | | | UNCDX | 1D1DD | 2.00 | 15.76 | 11.28 | | | | | | | | |

| UNBUNDLED NETWORK ELEMENTS - North Carolina | | | | | | | | | | | | | | Attachment: 2 | | Exhibit: A | |
|---|---|---|---|---|---|---|---|---|---|---|---|---|---|---|---|---|---|
| CATEGORY | | RATE ELEMENTS | Interim | Zone | BCS | USOC | RATES ($) | | | | | Svc Order Submitted Elec per LSR | Svc Order Submitted Manually per LSR | Incremental Charge - Manual Svc Order vs. Electronic-1st | Incremental Charge - Manual Svc Order vs. Electronic-Add'l | Incremental Charge - Manual Svc Order vs. Electronic-Disc 1st | Incremental Charge - Manual Svc Order vs. Electronic-Disc Add'l |
| | | | | | | | Rec | Nonrecurring | | Nonrecurring Disconnect | | OSS Rates ($) | | | | | |
| | | | | | | | | First | Add'l | First | Add'l | SOMEC | SOMAN | SOMAN | SOMAN | SOMAN | SOMAN |
| | | Nonrecurring Currently Combined Network Elements Switch -As-Is Charge | | | UNC1X | UNCCC | | 21.75 | 21.75 | 32.28 | 10.96 | | | 38.07 | 38.07 | | |
| | | EXTENDED 4-WIRE 64 KBPS EXTENDED DIGITAL LOOP WITH DEDICATED DS1 INTEROFFICE TRANSPORT | | | | | | | | | | | | | | | |
| | | First 4-Wire 64Kbps Digital Grade Loop in Combination - Zone 1 | | 1 | UNCDX | UDL64 | 25.32 | 489.04 | 337.51 | | | | | 38.07 | 38.07 | | |
| | | First 4-Wire 64Kbps Digital Grade Loop in Combination - Zone 2 | | 2 | UNCDX | UDL64 | 43.11 | 489.04 | 337.51 | | | | | 38.07 | 38.07 | | |
| | | First 4-Wire 64Kbps Digital Grade Loop in Combination - Zone 3 | | 3 | UNCDX | UDL64 | 67.26 | 489.04 | 337.51 | | | | | 38.07 | 38.07 | | |
| | | Interoffice Transport - Dedicated - DS1 combination - Per Mile Per Month | | | UNC1X | 1L5XX | 0.5753 | | | | | | | | | | |
| | | interoffice Transport - Dedicated - DS1 combination - Facility Termination Per Month | | | UNC1X | U1TF1 | 71.29 | 217.17 | 163.75 | | | | | 38.07 | 38.07 | | |
| | | 1/0 Channel System in combination Per Month | | | UNC1X | MQ1 | 146.69 | 197.78 | 140.06 | | | | | | | | |
| | | OCU-DP COCI (data) - in combination - per month (2.4-64kbs) | | | UNCDX | 1D1DD | 2.00 | 15.76 | 11.28 | | | | | | | | |
| | | Additional 4-Wire 64Kbps Digital Grade Loop in same DS1 Interoffice Transport Combination - Zone 1 | | 1 | UNCDX | UDL64 | 25.32 | 489.04 | 337.51 | | | | | 38.07 | 38.07 | | |
| | | Additional 4-Wire 64Kbps Digital Grade Loop in same DS1 Interoffice Transport Combination - Zone 2 | | 2 | UNCDX | UDL64 | 43.11 | 489.04 | 337.51 | | | | | 38.07 | 38.07 | | |
| | | Additional 4-Wire 64Kbps Digital Grade Loop in same DS1 Interoffice Transport Combination - Zone 3 | | 3 | UNCDX | UDL64 | 67.26 | 489.04 | 337.51 | | | | | 38.07 | 38.07 | | |
| | | Additional OCU-DP COCI (data) - in combination - per month (2.4-64kbs) | | | UNCDX | 1D1DD | 2.00 | 15.76 | 11.28 | | | | | | | | |
| | | Nonrecurring Currently Combined Network Elements Switch -As-Is Charge | | | UNC1X | UNCCC | | 21.75 | 21.75 | 32.28 | 10.96 | | | 38.07 | 38.07 | | |
| | | EXTENDED 4-WIRE DS1 DIGITAL EXTENDED LOOP WITH DEDICATED DS1 INTEROFFICE TRANSPORT | | | | | | | | | | | | | | | |
| | | 4-Wire DS1 Digital Loop in Combination - Zone 1 | | 1 | UNC1X | USLXX | 47.60 | 714.84 | 421.47 | | | | | 38.07 | 38.07 | | |
| | | 4-Wire DS1 Digital Loop in Combination - Zone 2 | | 2 | UNC1X | USLXX | 84.36 | 714.84 | 421.47 | | | | | 38.07 | 38.07 | | |
| | | 4-Wire DS1 Digital Loop in Combination - Zone 3 | | 3 | UNC1X | USLXX | 134.29 | 714.84 | 421.47 | | | | | 38.07 | 38.07 | | |
| | | Interoffice Transport - Dedicated - DS1 combination - Per Mile Per Month | | | UNC1X | 1L5XX | 0.5753 | | | | | | | | | | |
| | | Interoffice Transport - Dedicated - DS1 combination - Facility Termination Per Month | | | UNC1X | U1TF1 | 71.29 | 217.17 | 163.75 | | | | | 38.07 | 38.07 | | |
| | | Nonrecurring Currently Combined Network Elements Switch -As-Is Charge | | | UNC1X | UNCCC | | 21.75 | 21.75 | 32.28 | 10.96 | | | 38.07 | 38.07 | | |
| | | EXTENDED 4-WIRE DS1 DIGITAL EXTENDED LOOP WITH DEDICATED DS3 INTEROFFICE TRANSPORT | | | | | | | | | | | | | | | |
| | | First DS1Loop in Combination - Zone 1 | | 1 | UNC1X | USLXX | 47.60 | 714.84 | 421.47 | | | | | 38.07 | 38.07 | | |
| | | First DS1Loop in Combination - Zone 2 | | 2 | UNC1X | USLXX | 84.36 | 714.84 | 421.47 | | | | | 38.07 | 38.07 | | |
| | | First DS1Loop in Combination - Zone 3 | | 3 | UNC1X | USLXX | 134.29 | 714.84 | 421.47 | | | | | 38.07 | 38.07 | | |
| | | Interoffice Transport - Dedicated - DS3 combination - Per Mile Per Month | | | UNC3X | 1L5XX | 12.98 | | | | | | | | | | |
| | | Interoffice Transport - Dedicated - DS3 - Facility Termination per month | | | UNC3X | U1TF3 | 720.38 | 794.94 | 579.55 | | | | | 38.07 | 38.07 | | |
| | | 3/1Channel System in combination per month | | | UNC3X | MQ3 | 233.10 | 403.97 | 234.40 | | | | | | | | |
| | | DS1 COCI in combination per month | | | UNC1X | UC1D1 | 16.07 | 13.09 | 9.38 | | | | | | | | |
| | | Additional DS1Loop in DS3 Interoffice Transport Combination - Zone 1 | | 1 | UNC1X | USLXX | 47.60 | 714.84 | 421.47 | | | | | 38.07 | 38.07 | | |
| | | Additional DS1Loop in DS3 Interoffice Transport Combination - Zone 2 | | 2 | UNC1X | USLXX | 84.36 | 714.84 | 421.47 | | | | | 38.07 | 38.07 | | |
| | | Additional DS1Loop in DS3 Interoffice Transport Combination - Zone 3 | | 3 | UNC1X | USLXX | 134.29 | 714.84 | 421.47 | | | | | 38.07 | 38.07 | | |
| | | Additoinal DS1 COCI in combination per month | | | UNC1X | UC1D1 | 16.07 | 13.09 | 9.38 | | | | | | | | |
| | | Nonrecurring Currently Combined Network Elements Switch -As-Is Charge | | | UNC3X | UNCCC | | 21.75 | 21.75 | 32.28 | 10.96 | | | 38.07 | 38.07 | | |
| | | EXTENDED 2-WIRE VOICE GRADE EXTENDED LOOP/ 2 WIRE VOICE GRADE INTEROFFICE TRANSPORT | | | | | | | | | | | | | | | |
| | | 2-WireVG Loop in combination - Zone 1 | | 1 | UNCVX | UEAL2 | 14.97 | 142.97 | 106.56 | | | | | | | | |
| | | 2-WireVG Loop in combination - Zone 2 | | 2 | UNCVX | UEAL2 | 25.93 | 142.97 | 106.56 | | | | | | | | |
| | | 2-WireVG Loop in combination - Zone 3 | | 3 | UNCVX | UEAL2 | 40.81 | 142.97 | 106.56 | | | | | | | | |

| UNBUNDLED NETWORK ELEMENTS - North Carolina | | | | | | | | | | | | | | Attachment: 2 | | Exhibit: A | |
|---|---|---|---|---|---|---|---|---|---|---|---|---|---|---|---|---|---|
| CATEGORY | | RATE ELEMENTS | Interim | Zone | BCS | USOC | RATES ($) | | | | | Svc Order Submitted Elec per LSR | Svc Order Submitted Manually per LSR | Incremental Charge - Manual Svc Order vs. Electronic-1st | Incremental Charge - Manual Svc Order vs. Electronic-Add'l | Incremental Charge - Manual Svc Order vs. Electronic-Disc 1st | Incremental Charge - Manual Svc Order vs. Electronic-Disc Add'l |
| | | | | | | | Rec | Nonrecurring | | Nonrecurring Disconnect | | | | OSS Rates ($) | | | |
| | | | | | | | | First | Add'l | First | Add'l | SOMEC | SOMAN | SOMAN | SOMAN | SOMAN | SOMAN |
| | | Interoffice Transport - 2-wire VG - Dedicated- Per Mile Per Month | | | UNCVX | 1L5XX | 0.0282 | | | | | | | | | | |
| | | Interoffice Transport - 2-wire VG - Dedicated - Facility Termination per month | | | UNCVX | U1TV2 | 18.00 | 137.48 | 52.58 | | | | | 38.07 | 38.07 | | |
| | | Nonrecurring Currently Combined Network Elements Switch -As-Is Charge | | | UNCVX | UNCCC | | 21.75 | 21.75 | 32.28 | 10.96 | | | 38.07 | 38.07 | | |
| | | **EXTENDED 4-WIRE VOICE GRADE EXTENDED LOOP/ 4 WIRE VOICE GRADE INTEROFFICE TRANSPORT** | | | | | | | | | | | | | | | |
| | | 4-WireVG Loop in combination - Zone 1 | | 1 | UNCVX | UEAL4 | 21.32 | 288.47 | 237.45 | | | | | | | | |
| | | 4-WireVG Loop in combination - Zone 2 | | 2 | UNCVX | UEAL4 | 36.27 | 288.47 | 237.45 | | | | | | | | |
| | | 4-WireVG Loop in combination - Zone 3 | | 3 | UNCVX | UEAL4 | 56.57 | 288.47 | 237.45 | | | | | | | | |
| | | Interoffice Transport - 4-wire VG - Dedicated - Per Mile Per Month | | | UNCVX | 1L5XX | 0.0282 | | | | | | | | | | |
| | | Interoffice Transport - 4-wire VG - Dedicated - Facility Termination per month | | | UNCVX | U1TV4 | 22.16 | 106.11 | 65.95 | | | | | 38.07 | 38.07 | | |
| | | Nonrecurring Currently Combined Network Elements Switch -As-Is Charge | | | UNCVX | UNCCC | | 21.75 | 21.75 | 32.28 | 10.96 | | | 38.07 | 38.07 | | |
| | | **EXTENDED DS3 DIGITAL EXTENDED LOOP WITH DEDICATED DS3 INTEROFFICE TRANSPORT** | | | | | | | | | | | | | | | |
| | | DS3 Local Loop in combination - per mile per month | | | UNC3X | 1L5ND | 13.33 | | | | | | | | | | |
| | | DS3 Local Loop in combination - Facility Termination per month | | | UNC3X | UE3PX | 450.69 | 1,071.00 | 646.12 | | | | | | | | |
| | | Interoffice Transport - Dedicated - DS3 - Per Mile per month | | | UNC3X | 1L5XX | 12.98 | | | | | | | | | | |
| | | Interoffice Transport - Dedicated - DS3 combination - Facility Termination per month | | | UNC3X | U1TF3 | 720.38 | 794.94 | 579.55 | | | | | 38.07 | 38.07 | | |
| | | Nonrecurring Currently Combined Network Elements Switch -As-Is Charge | | | UNC3X | UNCCC | | 21.75 | 21.75 | 32.28 | 10.96 | | | 38.07 | 38.07 | | |
| | | **EXTENDED STS-1 DIGITAL EXTENDED LOOP WITH DEDICATED STS-1 INTEROFFICE TRANSPORT** | | | | | | | | | | | | | | | |
| | | STS-1 Local Loip in combination - per mile per month | | | UNCSX | 1L5ND | 13.33 | | | | | | | | | | |
| | | STS-1 Local Loop in combination - Facility Termination per month | | | UNCSX | UDLS1 | 464.26 | 1,071.00 | 646.12 | | | | | | | | |
| | | Interoffice Transport - Dedicated - STS-1 combination - per mile per month | | | UNCSX | 1L5XX | 6.14 | | | | | | | | | | |
| | | Interoffice Transport - Dedicated - STS-1 combination - Facility Termination per month | | | UNCSX | U1TFS | 790.37 | 642.23 | 408.89 | | | | | 38.07 | 38.07 | | |
| | | Nonrecurring Currently Combined Network Elements Switch -As-Is Charge | | | UNCSX | UNCCC | | 21.75 | 21.75 | 32.28 | 10.96 | | | 38.07 | 38.07 | | |
| | | **EXTENDED 2-WIRE ISDN EXTENDED LOOP WITH DS1 INTEROFFICE TRANSPORT** | | | | | | | | | | | | | | | |
| | | First 2-Wire ISDN Loop in Combination - Zone 1 | | 1 | UNCNX | U1L2X | 19.42 | 325.91 | 251.31 | | | | | 38.07 | 38.07 | | |
| | | First 2-Wire ISDN Loop in Combination - Zone 2 | | 2 | UNCNX | U1L2X | 32.88 | 325.91 | 251.31 | | | | | 38.07 | 38.07 | | |
| | | First 2-Wire ISDN Loop in Combination - Zone 3 | | 3 | UNCNX | U1L2X | 51.14 | 325.91 | 251.31 | | | | | 38.07 | 38.07 | | |
| | | Interoffice Transport - Dedicated - DS1 combination - per mile per month | | | UNC1X | 1L5XX | 0.5753 | | | | | | | | | | |
| | | Interoffice Transport - Dedicated - DS1 combination - Facility Termination per month | | | UNC1X | U1TF1 | 71.29 | 217.17 | 163.75 | | | | | 38.07 | 38.07 | | |
| | | 1/0 Channel System in combination - per month | | | UNC1X | MQ1 | 146.69 | 197.78 | 140.06 | | | | | | | | |
| | | 2-wire ISDN COCI (BRITE) - in combination - per month | | | UNCNX | UC1CA | 3.59 | 15.76 | 11.28 | | | | | | | | |
| | | Additional 2-wire ISDN Loop in same DS1Interoffice Transport Combination - Zone 1 | | 1 | UNCNX | U1L2X | 19.42 | 325.91 | 251.31 | | | | | 38.07 | 38.07 | | |
| | | Additional 2-wire ISDN Loop in same DS1Interoffice Transport Combination - Zone 2 | | 2 | UNCNX | U1L2X | 32.88 | 325.91 | 251.31 | | | | | 38.07 | 38.07 | | |
| | | Additional 2-wire ISDN Loop in same DS1Interoffice Transport Combination - Zone 3 | | 3 | UNCNX | U1L2X | 51.14 | 325.91 | 251.31 | | | | | 38.07 | 38.07 | | |
| | | Additional 2-wire ISDN COCI (BRITE) - in combination- per month | | | UNCNX | UC1CA | 3.59 | 15.76 | 11.28 | | | | | | | | |
| | | Nonrecurring Currently Combined Network Elements Switch -As-Is Charge | | | UNC1X | UNCCC | | 21.75 | 21.75 | 32.28 | 10.96 | | | 38.07 | 38.07 | | |
| | | **EXTENDED 4-WIRE DS1 DIGITAL EXTENDED LOOP WITH DEDICATED STS-1 INTEROFFICE TRANSPORT** | | | | | | | | | | | | | | | |
| | | First DS1 Loop Combination - Zone 1 | | 1 | UNC1X | USLXX | 47.60 | 714.84 | 421.47 | | | | | 38.07 | 38.07 | | |
| | | First DS1 Loop Combination - Zone 2 | | 2 | UNC1X | USLXX | 84.36 | 714.84 | 421.47 | | | | | 38.07 | 38.07 | | |
| | | First DS1 Loop Combination - Zone 3 | | 3 | UNC1X | USLXX | 134.29 | 714.84 | 421.47 | | | | | 38.07 | 38.07 | | |

| UNBUNDLED NETWORK ELEMENTS - North Carolina | | | | | | | | | | | | | | Attachment: 2 | | Exhibit: A | |
|---|---|---|---|---|---|---|---|---|---|---|---|---|---|---|---|---|---|
| CATEGORY | | RATE ELEMENTS | Interim | Zone | BCS | USOC | RATES ($) | | | | | Svc Order Submitted Elec per LSR | Svc Order Submitted Manually per LSR | Incremental Charge - Manual Svc Order vs. Electronic-1st | Incremental Charge - Manual Svc Order vs. Electronic-Add'l | Incremental Charge - Manual Svc Order vs. Electronic-Disc 1st | Incremental Charge - Manual Svc Order vs. Electronic-Disc Add'l |
| | | | | | | | Rec | Nonrecurring | | Nonrecurring Disconnect | | | | OSS Rates ($) | | | |
| | | | | | | | | First | Add'l | First | Add'l | SOMEC | SOMAN | SOMAN | SOMAN | SOMAN | SOMAN |
| | | Interoffice Transport - Dedicated - STS-1 combination - Per Mile Per Month | | | UNCSX | 1L5XX | 6.14 | | | | | | | | | | |
| | | Interoffice Transport - Dedicated - STS-1 combination - Facility Termination per month | | | UNCSX | U1TFS | 790.37 | 642.23 | 408.89 | | | | | 38.07 | 38.07 | | |
| | | 3/1 Channel System in combination per month | | | UNCSX | MQ3 | 233.10 | 403.97 | 234.40 | | | | | | | | |
| | | DS1 COCI in combination per month | | | UNC1X | UC1D1 | 16.07 | 13.09 | 9.38 | | | | | | | | |
| | | Additional DS1Loop in the same STS-1 Interoffice Transport Combination - Zone 1 | | 1 | UNC1X | USLXX | 47.60 | 714.84 | 421.47 | | | | | 38.07 | 38.07 | | |
| | | Additional DS1Loop in the same STS-1 Interoffice Transport Combination - Zone 2 | | 2 | UNC1X | USLXX | 84.36 | 714.84 | 421.47 | | | | | 38.07 | 38.07 | | |
| | | Additional DS1Loop in the same STS-1 Interoffice Transport Combination - Zone 3 | | 3 | UNC1X | USLXX | 134.29 | 714.84 | 421.47 | | | | | 38.07 | 38.07 | | |
| | | DS1 COCI in combination per month | | | UNC1X | UC1D1 | 16.07 | 13.09 | 9.38 | | | | | | | | |
| | | Nonrecurring Currently Combined Network Elements Switch -As-Is Charge | | | UNCSX | UNCCC | | 21.75 | 21.75 | 32.28 | 10.96 | | | 38.07 | 38.07 | | |
| | | **EXTENDED 4-WIRE 56 KBPS DIGITAL EXTENDED LOOP WITH 56 KBPS INTEROFFICE TRANSPORT** | | | | | | | | | | | | | | | |
| | | 4-wire 56 kbps Local Loop in combination - Zone 1 | | 1 | UNCDX | UDL56 | 25.32 | 489.04 | 337.51 | | | | | | | | |
| | | 4-wire 56 kbps Local Loop in combination - Zone 2 | | 2 | UNCDX | UDL56 | 43.11 | 489.04 | 337.51 | | | | | | | | |
| | | 4-wire 56 kbps Local Loop in combination - Zone 3 | | 3 | UNCDX | UDL56 | 67.26 | 489.04 | 337.51 | | | | | | | | |
| | | Interoffice Transport - Dedicated - 4-wire 56 kbps combination - Per Mile per month | | | UNCDX | 1L5XX | 0.0282 | | | | | | | | | | |
| | | Interoffice Transport - Dedicated - 4-wire 56 kbps combination - Facility Termination per month | | | UNCDX | U1TD5 | 17.40 | 137.48 | 52.58 | | | | | 38.07 | 38.07 | | |
| | | Nonrecurring Currently Combined Network Elements Switch -As-Is Charge | | | UNCDX | UNCCC | | 21.75 | 21.75 | 32.28 | 10.96 | | | 38.07 | 38.07 | | |
| | | **EXTENDED 4-WIRE 64 KBPS DIGITAL EXTENDED LOOP WITH 64 KBPS INTEROFFICE TRANSPORT** | | | | | | | | | | | | | | | |
| | | 4-wire 64 kbps Lcoal Loop in Combination - Zone 1 | | 1 | UNCDX | UDL64 | 25.32 | 489.04 | 337.51 | | | | | | | | |
| | | 4-wire 64 kbps Lcoal Loop in Combination - Zone 2 | | 2 | UNCDX | UDL64 | 43.11 | 489.04 | 337.51 | | | | | | | | |
| | | 4-wire 64 kbps Lcoal Loop in Combination - Zone 3 | | 3 | UNCDX | UDL64 | 67.26 | 489.04 | 337.51 | | | | | | | | |
| | | Interoffice Transport - Dedicated - 4-wire 64 kbps combination - Per Mile per month | | | UNCDX | 1L5XX | 0.0282 | | | | | | | | | | |
| | | Interoffice Transport - Dedicated - 4-wire 64 kbps combination - Facility Termination per month | | | UNCDX | U1TD6 | 17.40 | 137.48 | 52.58 | | | | | 38.07 | 38.07 | | |
| | | Nonrecurring Currently Combined Network Elements Switch -As-Is Charge | | | UNCDX | UNCCC | | 21.75 | 21.75 | 32.28 | 10.96 | | | 38.07 | 38.07 | | |
| | | **EXTENDED 2-WIRE VOICE GRADE LOOP WITH DS1 INTEROFFICE TRANSPORT w/ 3/1 MUX** | | | | | | | | | | | | | | | |
| | | First 2-wire VG Loop (SL2) in Combination - Zone 1 | | 1 | UNCVX | UEAL2 | 14.97 | 142.97 | 106.56 | | | | | 38.07 | 38.07 | | |
| | | First 2-wire VG Loop (SL2) in Combination - Zone 2 | | 2 | UNCVX | UEAL2 | 25.93 | 142.97 | 106.56 | | | | | 38.07 | 38.07 | | |
| | | First 2-wire VG Loop (SL2) in Combination - Zone 3 | | 3 | UNCVX | UEAL2 | 40.81 | 142.97 | 106.56 | | | | | 38.07 | 38.07 | | |
| | | First Interoffice Transport - Dedicated - DS1 combination - Per Mile | | | UNC1X | 1L5XX | 0.5753 | | | | | | | | | | |
| | | First Interoffice Transport - Dedicated - DS1 combination - Facility Termination per month | | | UNC1X | U1TF1 | 71.29 | 217.17 | 163.75 | | | | | 38.07 | 38.07 | | |
| | | Per each DS1 Channelization System Per Month | | | UNC1X | MQ1 | 146.69 | 197.78 | 140.06 | | | | | | | | |
| | | Per each Voice Grade COCI - Per Month per month | | | UNCVX | 1D1VG | 1.27 | 13.09 | 9.38 | | | | | | | | |
| | | 3/1 Channel System in combination per month | | | UNC3X | MQ3 | 233.10 | 403.97 | 234.40 | | | | | | | | |
| | | Per each DS1 COCI in combination per month | | | UNC1X | UC1D1 | 16.07 | 13.09 | 9.38 | | | | | | | | |
| | | Each Additional 2-Wire VG Loop(SL 2) in the same DS1 Interoffice Transport Combination - Zone 1 | | 1 | UNCVX | UEAL2 | 14.97 | 142.97 | 106.56 | | | | | 38.07 | 38.07 | | |
| | | Each Additional 2-Wire VG Loop(SL2) in the same DS1 Interoffice Transport Combination - Zone 2 | | 2 | UNCVX | UEAL2 | 25.93 | 142.97 | 106.56 | | | | | 38.07 | 38.07 | | |
| | | Each Additional 2-Wire VG Loop(SL2) in the same DS1 Interoffice Transport Combination - Zone 3 | | 3 | UNCVX | UEAL2 | 40.81 | 142.97 | 106.56 | | | | | 38.07 | 38.07 | | |
| | | Each Additional Voice Grade COCI in combination - per month | | | UNCVX | 1D1VG | 1.27 | 13.09 | 9.38 | | | | | | | | |
| | | Each Additional DS1 Interoffice Channel per mile in same 3/1 Channel System per month | | | UNC1X | 1L5XX | 0.5753 | | | | | | | | | | |
| | | Each Additional DS1 Interoffice Channel Facility Termination in same 3/1 Channel System per month | | | UNC1X | U1TF1 | 71.29 | 217.17 | 163.75 | | | | | 38.07 | 38.07 | | |
| | | Each Additional DS1 COCI combination per month | | | UNC1X | UC1D1 | 16.07 | 13.09 | 9.38 | | | | | | | | |

## UNBUNDLED NETWORK ELEMENTS - North Carolina

| CATEGORY | | RATE ELEMENTS | Interim | Zone | BCS | USOC | RATES ($) | | | | | Svc Order Submitted Elec per LSR | Svc Order Submitted Manually per LSR | Attachment: 2 Incremental Charge - Manual Svc Order vs. Electronic- 1st | Attachment: 2 Incremental Charge - Manual Svc Order vs. Electronic- Add'l | Exhibit: A Incremental Charge - Manual Svc Order vs. Electronic- Disc 1st | Exhibit: A Incremental Charge - Manual Svc Order vs. Electronic- Disc Add'l |
|---|---|---|---|---|---|---|---|---|---|---|---|---|---|---|---|---|---|
| | | | | | | | Rec | Nonrecurring | | Nonrecurring Disconnect | | OSS Rates ($) | | | | | |
| | | | | | | | | First | Add'l | First | Add'l | SOMEC | SOMAN | SOMAN | SOMAN | SOMAN | SOMAN |
| | | Nonrecurring Currently Combined Network Elements Switch -As-Is Charge | | | UNC1X | UNCCC | | 21.75 | 21.75 | 32.28 | 10.96 | | | 38.07 | 38.07 | | |
| | | **EXTENDED 4-WIRE VOICE GRADE LOOP WITH DEDICATED DS1 INTEROFFICE TRANSPORT w/ 3/1 MUX** | | | | | | | | | | | | | | | |
| | | First 4-Wire Analog Voice Grade Local Loop in Combination - Zone 1 | | 1 | UNCVX | UEAL4 | 21.32 | 288.47 | 237.45 | | | | | 38.07 | 38.07 | | |
| | | First 4-Wire Analog Voice Grade Local Loop in Combination - Zone 2 | | 2 | UNCVX | UEAL4 | 36.27 | 288.47 | 237.45 | | | | | 38.07 | 38.07 | | |
| | | First 4-Wire Analog Voice Grade Local Loop in Combination - Zone 3 | | 3 | UNCVX | UEAL4 | 56.57 | 288.47 | 237.45 | | | | | 38.07 | 38.07 | | |
| | | First Interoffice Transport - Dedicated - DS1 combination - Per Mile Per Month | | | UNC1X | 1L5XX | 0.5753 | | | | | | | | | | |
| | | First Interoffice Transport - Dedicated - DS1 - Facility Termination Per Month | | | UNC1X | U1TF1 | 71.29 | 217.17 | 163.75 | | | | | 38.07 | 38.07 | | |
| | | Per each 1/0 Channel System in combination Per Month | | | UNC1X | MQ1 | 146.69 | 197.78 | 140.06 | | | | | | | | |
| | | Per each Voice Grade COCI in combination - per month | | | UNCVX | 1D1VG | 1.27 | 13.09 | 9.38 | | | | | | | | |
| | | 3/1 Channel System in combination per month | | | UNC3X | MQ3 | 233.10 | 403.97 | 234.40 | | | | | | | | |
| | | Per each DS1 COCI in combination per month | | | UNC1X | UC1D1 | 16.07 | 13.09 | 9.38 | | | | | | | | |
| | | Additional 4-Wire Analog Voice Grade Loop in same DS1 Interoffice Transport Combination - Zone 1 | | 1 | UNCVX | UEAL4 | 21.32 | 288.47 | 237.45 | | | | | 38.07 | 38.07 | | |
| | | Additional 4-Wire Analog Voice Grade Loop in same DS1 Interoffice Transport Combination - Zone 2 | | 2 | UNCVX | UEAL4 | 36.27 | 288.47 | 237.45 | | | | | 38.07 | 38.07 | | |
| | | Additional 4-Wire Analog Voice Grade Loop in same DS1 Interoffice Transport Combination - Zone 3 | | 3 | UNCVX | UEAL4 | 56.57 | 288.47 | 237.45 | | | | | 38.07 | 38.07 | | |
| | | Each Additional DS1 Interoffice Channel per mile in same 3/1 Channel System per month | | | UNC1X | 1L5XX | 0.5753 | | | | | | | | | | |
| | | Each Additional DS1 Interoffice Channel Facility Termination in same 3/1 Channel System per month | | | UNC1X | U1TF1 | 71.29 | 217.17 | 163.75 | | | | | 38.07 | 38.07 | | |
| | | Additional Voice Grade COCI - in combination - per month | | | UNCVX | 1D1VG | 1.27 | 13.09 | 9.38 | | | | | | | | |
| | | Nonrecurring Currently Combined Network Elements Switch -As-Is Charge | | | UNC1X | UNCCC | | 21.75 | 21.75 | 32.28 | 10.96 | | | 38.07 | 38.07 | | |
| | | **EXTENDED 4-WIRE 56 KBPS DIGITAL LOOP WITH DEDICATED DS1 INTEROFFICE TRANSPORT w/ 3/1 MUX** | | | | | | | | | | | | | | | |
| | | First 4-Wire 56Kbps Digital Grade Local Loop in Combination - Zone 1 | | 1 | UNCDX | UDL56 | 25.32 | 489.04 | 337.51 | | | | | 38.07 | 38.07 | | |
| | | First 4-Wire 56Kbps Digital Grade Local Loop in Combination - Zone 2 | | 2 | UNCDX | UDL56 | 43.11 | 489.04 | 337.51 | | | | | 38.07 | 38.07 | | |
| | | First 4-Wire 56Kbps Digital Grade Local Loop in Combination - Zone 3 | | 3 | UNCDX | UDL56 | 67.26 | 489.04 | 337.51 | | | | | 38.07 | 38.07 | | |
| | | First Interoffice Transport - Dedicated - DS1 combination - Per Mile Per Month | | | UNC1X | 1L5XX | 0.5753 | | | | | | | | | | |
| | | First Interoffice Transport - Dedicated - DS1 - combination Facility Termination Per Month | | | UNC1X | U1TF1 | 71.29 | 217.17 | 163.75 | | | | | 38.07 | 38.07 | | |
| | | Per each 1/0 Channel System in combination Per Month | | | UNC1X | MQ1 | 146.69 | 197.78 | 140.06 | | | | | | | | |
| | | Per each OCU-DP COCI (data) COCI per month (2.4-64kbs) | | | UNCDX | 1D1DD | 2.00 | 15.76 | 11.28 | | | | | | | | |
| | | 3/1 Channel System in combination per month | | | UNC3X | MQ3 | 233.10 | 403.97 | 234.40 | | | | | | | | |
| | | Per each DS1 COCI in combination per month | | | UNC1X | UC1D1 | 16.07 | 13.09 | 9.38 | | | | | | | | |
| | | Additional 4-Wire 56Kbps Digital Grade Loop in same DS1 Interoffice Transport Combination - Zone 1 | | 1 | UNCDX | UDL56 | 25.32 | 489.04 | 337.51 | | | | | 38.07 | 38.07 | | |
| | | Additional 4-Wire 56Kbps Digital Grade Loop in same DS1 Interoffice Transport Combination - Zone 2 | | 2 | UNCDX | UDL56 | 43.11 | 489.04 | 337.51 | | | | | 38.07 | 38.07 | | |
| | | Additional 4-Wire 56Kbps Digital Grade Loop in same DS1 Interoffice Transport Combination - Zone 3 | | 3 | UNCDX | UDL56 | 67.26 | 489.04 | 337.51 | | | | | 38.07 | 38.07 | | |
| | | OCU-DP COCI (data) COCI in combination per month (2.4-64kbs) | | | UNCDX | 1D1DD | 2.00 | 15.76 | 11.28 | | | | | | | | |
| | | Each Additional DS1 Interoffice Channel per mile in same 3/1 Channel System per month | | | UNC1X | 1L5XX | 0.5753 | | | | | | | | | | |
| | | Each Additional DS1 Interoffice Channel Facility Termination in same 3/1 Channel System per month | | | UNC1X | U1TF1 | 71.29 | 217.17 | 163.75 | | | | | 38.07 | 38.07 | | |
| | | Each Additional DS1 COCI in the same 3/1 channel system combination per month | | | UNC1X | UC1D1 | 16.07 | 13.09 | 9.38 | | | | | | | | |

| UNBUNDLED NETWORK ELEMENTS - North Carolina | | | | | | | | | | | | | | Attachment: 2 | | Exhibit: A | |
|---|---|---|---|---|---|---|---|---|---|---|---|---|---|---|---|---|---|
| CATEGORY | | RATE ELEMENTS | Interim | Zone | BCS | USOC | RATES ($) | | | | | Svc Order Submitted Elec per LSR | Svc Order Submitted Manually per LSR | Incremental Charge - Manual Svc Order vs. Electronic-1st | Incremental Charge - Manual Svc Order vs. Electronic-Add'l | Incremental Charge - Manual Svc Order vs. Electronic-Disc 1st | Incremental Charge - Manual Svc Order vs. Electronic-Disc Add'l |
| | | | | | | | Rec | Nonrecurring | | Nonrecurring Disconnect | | OSS Rates ($) | | | | | |
| | | | | | | | | First | Add'l | First | Add'l | SOMEC | SOMAN | SOMAN | SOMAN | SOMAN | SOMAN |
| | | Nonrecurring Currently Combined Network Elements Switch -As-Is Charge | | | UNC1X | UNCCC | | 21.75 | 21.75 | 32.28 | 10.96 | | | 38.07 | 38.07 | | |
| | | **EXTENDED 4-WIRE 64 KBPS DIGITAL LOOP WITH DEDICATED DS1 INTEROFFICE TRANSPORT w/ 3/1 MUX** | | | | | | | | | | | | | | | |
| | | First 4-Wire 64Kbps Digital Grade Loop in a DS1 Interoffice Transport Combination - Zone 1 | | 1 | UNCDX | UDL64 | 25.32 | 489.04 | 337.51 | | | | | 38.07 | 38.07 | | |
| | | First 4-Wire 64Kbps Digital Grade Loop in a DS1 Interoffice Transport Combination - Zone 2 | | 2 | UNCDX | UDL64 | 43.11 | 489.04 | 337.51 | | | | | 38.07 | 38.07 | | |
| | | First 4-Wire 64Kbps Digital Grade Loop in a DS1 Interoffice Transport Combination - Zone 3 | | 3 | UNCDX | UDL64 | 67.26 | 489.04 | 337.51 | | | | | 38.07 | 38.07 | | |
| | | First Interoffice Transport - Dedicated - DS1 combination - Per Mile Per Month | | | UNC1X | 1L5XX | 0.5753 | | | | | | | | | | |
| | | First Interoffice Transport - Dedicated - DS1 combination - Facility Termination Per Month | | | UNC1X | U1TF1 | 71.29 | 217.17 | 163.75 | | | | | 38.07 | 38.07 | | |
| | | Per each Channel System 1/0 in combination Per Month | | | UNC1X | MQ1 | 146.69 | 197.78 | 140.06 | | | | | | | | |
| | | Per each OCU-DP COCI (data) in combination - per month (2.4-64kbs) | | | UNCDX | 1D1DD | 2.00 | 15.76 | 11.28 | | | | | | | | |
| | | 3/1 Channel System in combination per month | | | UNC3X | MQ3 | 233.10 | 403.97 | 234.40 | | | | | | | | |
| | | Per each DS1 COCI in combination per month | | | UNC1X | UC1D1 | 16.07 | 13.09 | 9.38 | | | | | | | | |
| | | Additional 4-Wire 64Kbps Digital Grade Loop in same DS1 Interoffice Transport Combination - Zone 1 | | 1 | UNCDX | UDL64 | 25.32 | 489.04 | 337.51 | | | | | 38.07 | 38.07 | | |
| | | Additional 4-Wire 64Kbps Digital Grade Loop in same DS1 Interoffice Transport Combination - Zone 2 | | 2 | UNCDX | UDL64 | 43.11 | 489.04 | 337.51 | | | | | 38.07 | 38.07 | | |
| | | Additional 4-Wire 64Kbps Digital Grade Loop in same DS1 Interoffice Transport Combination - Zone 3 | | 3 | UNCDX | UDL64 | 67.26 | 489.04 | 337.51 | | | | | 38.07 | 38.07 | | |
| | | Additional OCU-DP COCI (data) - DS1 to DS0 Channel System combination - per month (2.4-64kbs) | | | UNCDX | 1D1DD | 2.00 | 15.76 | 11.28 | | | | | | | | |
| | | Each Additional DS1 Interoffice Channel per mile in same 3/1 Channel System per month | | | UNC1X | 1L5XX | 0.5753 | | | | | | | | | | |
| | | Each Additional DS1 Interoffice Channel Facility Termination in same 3/1 Channel System per month | | | UNC1X | U1TF1 | 71.29 | 217.17 | 163.75 | | | | | 38.07 | 38.07 | | |
| | | Each Additional DS1 COCI in the same 3/1 channel system combination per month | | | UNC1X | UC1D1 | 16.07 | 13.09 | 9.38 | | | | | | | | |
| | | Nonrecurring Currently Combined Network Elements Switch -As-Is Charge | | | UNC1X | UNCCC | | 21.75 | 21.75 | 32.28 | 10.96 | | | 38.07 | 38.07 | | |
| | | **EXTENDED 2-WIRE ISDN LOOP WITH DS1 INTEROFFICE TRANSPORT w/ 3/1 MUX** | | | | | | | | | | | | | | | |
| | | First 2-Wire ISDN Loop in a DS1 Interoffice Combination Transport - Zone 1 | | 1 | UNCNX | U1L2X | 19.42 | 325.91 | 251.31 | | | | | 38.07 | 38.07 | | |
| | | First 2-Wire ISDN Loop in a DS1 Interoffice Combination Transport - Zone 2 | | 2 | UNCNX | U1L2X | 32.88 | 325.91 | 251.31 | | | | | 38.07 | 38.07 | | |
| | | First 2-Wire ISDN Loop in a DS1 Interoffice Combination Transport - Zone 3 | | 3 | UNCNX | U1L2X | 51.14 | 325.91 | 251.31 | | | | | 38.07 | 38.07 | | |
| | | First Interoffice Transport - Dedicated - DS1 combination - Per Mile per month | | | UNC1X | 1L5XX | 0.5753 | | | | | | | | | | |
| | | First Interoffice Transport - Dedicated - DS1 combination - Facility Termination per month | | | UNC1X | U1TF1 | 71.29 | 217.17 | 163.75 | | | | | 38.07 | 38.07 | | |
| | | Per each Channel System 1/0 in combination - per month | | | UNC1X | MQ1 | 146.69 | 197.78 | 140.06 | | | | | | | | |
| | | Per each 2-wire ISDN COCI (BRITE) in combination - per month | | | UNCNX | UC1CA | 3.59 | 15.76 | 11.28 | | | | | | | | |
| | | 3/1 Channel System in combination per month | | | UNC3X | MQ3 | 233.10 | 403.97 | 234.40 | | | | | | | | |
| | | Per each DS1 COCI in combination per month | | | UNC1X | UC1D1 | 16.07 | 13.09 | 9.38 | | | | | | | | |
| | | Additional 2-wire ISDN Loop in same DS1Interoffice Transport Combination - Zone 1 | | 1 | UNCNX | U1L2X | 19.42 | 325.91 | 251.31 | | | | | 38.07 | 38.07 | | |
| | | Additional 2-wire ISDN Loop in same DS1Interoffice Transport Combination - Zone 2 | | 2 | UNCNX | U1L2X | 32.88 | 325.91 | 251.31 | | | | | 38.07 | 38.07 | | |
| | | Additional 2-wire ISDN Loop in same DS1Interoffice Transport Combination - Zone 3 | | 3 | UNCNX | U1L2X | 51.14 | 325.91 | 251.31 | | | | | 38.07 | 38.07 | | |
| | | Additional 2-wire ISDN COCI (BRITE) in same 1/0 channel system combination- per month | | | UNCNX | UC1CA | 3.59 | 15.76 | 11.28 | | | | | | | | |

| UNBUNDLED NETWORK ELEMENTS - North Carolina | | | | | | | | | | | | | | Attachment: 2 | | Exhibit: A | |
|---|---|---|---|---|---|---|---|---|---|---|---|---|---|---|---|---|---|
| CATEGORY | | RATE ELEMENTS | Interim | Zone | BCS | USOC | RATES ($) | | | | | Svc Order Submitted Elec per LSR | Svc Order Submitted Manually per LSR | Incremental Charge - Manual Svc Order vs. Electronic-1st | Incremental Charge - Manual Svc Order vs. Electronic-Add'l | Incremental Charge - Manual Svc Order vs. Electronic-Disc 1st | Incremental Charge - Manual Svc Order vs. Electronic-Disc Add'l |
| | | | | | | | Rec | Nonrecurring | | Nonrecurring Disconnect | | OSS Rates ($) | | | | | |
| | | | | | | | | First | Add'l | First | Add'l | SOMEC | SOMAN | SOMAN | SOMAN | SOMAN | SOMAN |
| | | Each Additional DS1 Interoffice Channel per mile in same 3/1 Channel System per month | | | UNC1X | 1L5XX | 0.5753 | | | | | | | | | | |
| | | Each Additional DS1 Interoffice Channel Facility Termination in same 3/1 Channel System per month | | | UNC1X | U1TF1 | 71.29 | 217.17 | 163.75 | | | | | 38.07 | 38.07 | | |
| | | Each Additional DS1 COCI in the same 3/1 channel system combination per month | | | UNC1X | UC1D1 | 16.07 | 13.09 | 9.38 | | | | | | | | |
| | | Nonrecurring Currently Combined Network Elements Switch -As-Is Charge | | | UNC1X | UNCCC | | 21.75 | 21.75 | 32.28 | 10.96 | | | 38.07 | 38.07 | | |
| | **EXTENDED 4-WIRE DS1 LOOP WITH DEDICATED DS1 INTEROFFICE TRANSPORT w/ 3/1 MUX** | | | | | | | | | | | | | | | | |
| | | First 4-wire DS1 Digital Lcoal Loop in Combination - Zone 1 | | 1 | UNC1X | USLXX | 47.60 | 714.84 | 421.47 | | | | | 38.07 | 38.07 | | |
| | | First 4-wire DS1 Digital Lcoal Loop in Combination - Zone 2 | | 2 | UNC1X | USLXX | 84.36 | 714.84 | 421.47 | | | | | 38.07 | 38.07 | | |
| | | First 4-wire DS1 Digital Lcoal Loop in Combination - Zone 3 | | 3 | UNC1X | USLXX | 134.29 | 714.84 | 421.47 | | | | | 38.07 | 38.07 | | |
| | | First Interoffice Transport - Dedicated - DS1 combination - Per Mile Per Month | | | UNC1X | 1L5XX | 0.5753 | | | | | | | | | | |
| | | First Interoffice Transport - Dedicated - DS1 combination - Facility Termination Per Month | | | UNC1X | U1TF1 | 71.29 | 217.17 | 163.75 | | | | | 38.07 | 38.07 | | |
| | | 3/1 Channel System in combination per month | | | UNC3X | MQ3 | 233.10 | 403.97 | 234.40 | | | | | | | | |
| | | Per each DS1 COCI combination per month | | | UNC1X | UC1D1 | 16.07 | 13.09 | 9.38 | | | | | | | | |
| | | Each Additional DS1 Interoffice Channel per mile in same 3/1 Channel System per month | | | UNC1X | 1L5XX | 0.5753 | | | | | | | | | | |
| | | Each Additional DS1 Interoffice Channel Facility Termination in same 3/1 Channel System per month | | | UNC1X | U1TF1 | 71.29 | 217.17 | 163.75 | | | | | 38.07 | 38.07 | | |
| | | Each Additional DS1 COCI in the same 3/1 channel system combination per month | | | UNC1X | UC1D1 | 16.07 | 13.09 | 9.38 | | | | | | | | |
| | | Additional 4-Wire DS1 Digital Local Loop in Combination - Zone 1 | | 1 | UNC1X | USLXX | 47.60 | 714.84 | 421.47 | | | | | 38.07 | 38.07 | | |
| | | Additional 4-Wire DS1 Digital Local Loop in Combination - Zone 2 | | 2 | UNC1X | USLXX | 84.36 | 714.84 | 421.47 | | | | | 38.07 | 38.07 | | |
| | | Additional 4-Wire DS1 Digital Local Loop in Combination - Zone 3 | | 3 | UNC1X | USLXX | 134.29 | 714.84 | 421.47 | | | | | 38.07 | 38.07 | | |
| | | Nonrecurring Currently Combined Network Elements Switch -As-Is Charge | | | UNC1X | UNCCC | | 21.75 | 21.75 | 32.28 | 10.96 | | | 38.07 | 38.07 | | |
| | **EXTENDED 4-WIRE 56 KBPS DIGITAL EXTENDED LOOP WITH DS0 INTEROFFICE TRANSPORT** | | | | | | | | | | | | | | | | |
| | | First 4-wire 56 kbps Local Loop in combination - Zone 1 | | 1 | UNCDX | UDL56 | 25.32 | 489.04 | 337.51 | | | | | | | | |
| | | First 4-wire 56 kbps Local Loop in combination - Zone 2 | | 2 | UNCDX | UDL56 | 43.11 | 489.04 | 337.51 | | | | | | | | |
| | | First 4-wire 56 kbps Local Loop in combination - Zone 3 | | 3 | UNCDX | UDL56 | 67.26 | 489.04 | 337.51 | | | | | | | | |
| | | First 4-wiree 56 kbps Interoffice Transport - Dedicated - Per Mile per month | | | UNCDX | 1L5XX | 0.0282 | | | | | | | | | | |
| | | First 4-wire 56 kbps Interoffice Transport - Dedicated - Facility Termination per month | | | UNCDX | U1TD5 | 17.40 | 137.48 | 52.58 | | | | | 38.07 | 38.07 | | |
| | | Nonrecurring Currently Combined Network Elements Switch -As-Is Charge | | | UNCDX | UNCCC | | 21.75 | 21.75 | 32.28 | 10.96 | | | 38.07 | 38.07 | | |
| | **EXTENDED 4-WIRE 64 KBPS DIGITAL EXTENDED LOOP WITH DS0 INTEROFFICE TRANSPORT** | | | | | | | | | | | | | | | | |
| | | First 4-wire 64 kbps Local Loop in combination - Zone 1 | | 1 | UNCDX | UDL64 | 25.32 | 489.04 | 337.51 | | | | | | | | |
| | | First 4-wire 64 kbps Local Loop in combination - Zone 2 | | 2 | UNCDX | UDL64 | 43.11 | 489.04 | 337.51 | | | | | | | | |
| | | First 4-wire 64 kbps Local Loop in combination - Zone 3 | | 3 | UNCDX | UDL64 | 67.26 | 489.04 | 337.51 | | | | | | | | |
| | | First I4-wire 65 kbps Interoffice Transport - Dedicated - Per Mile per month | | | UNCDX | 1L5XX | 0.0282 | | | | | | | | | | |
| | | First 4-wire 64 kbps Interoffice Transport - Dedicated - Facility Termination per month | | | UNCDX | U1TD6 | 17.40 | 137.48 | 52.58 | | | | | 38.07 | 38.07 | | |
| | | Nonrecurring Currently Combined Network Elements Switch -As-Is Charge | | | UNCDX | UNCCC | | 21.75 | 21.75 | 32.28 | 10.96 | | | 38.07 | 38.07 | | |
| **ADDITIONAL NETWORK ELEMENTS** | | | | | | | | | | | | | | | | | |
| | **When used as a part of a currently combined facility, the non-recurrng charges do not apply, but a Switch As Is charge does apply.** | | | | | | | | | | | | | | | | |
| | **When used as ordinarily combined network elements in All States, the non-recurring charges apply and the Switch As Is Charge does not.** | | | | | | | | | | | | | | | | |
| | **Nonrecurring Currently Combined Network Elements "Switch As Is" Charge (One applies to each combination)** | | | | | | | | | | | | | | | | |
| | | Nonrecurring Currently Combined Network Elements Switch -As-Is Charge - 2 wire/4-Wire VG | | | UNCVX | UNCCC | | 21.75 | 21.75 | 32.28 | 10.96 | | | 26.94 | 12.76 | | |

| UNBUNDLED NETWORK ELEMENTS - North Carolina | | | | | | | | | | | | | | Attachment: 2 | | Exhibit: A | |
|---|---|---|---|---|---|---|---|---|---|---|---|---|---|---|---|---|---|
| CATEGORY | | RATE ELEMENTS | Interim | Zone | BCS | USOC | RATES ($) | | | | | Svc Order Submitted Elec per LSR | Svc Order Submitted Manually per LSR | Incremental Charge - Manual Svc Order vs. Electronic-1st | Incremental Charge - Manual Svc Order vs. Electronic-Add'l | Incremental Charge - Manual Svc Order vs. Electronic-Disc 1st | Incremental Charge - Manual Svc Order vs. Electronic-Disc Add'l |
| | | | | | | | Rec | Nonrecurring | | Nonrecurring Disconnect | | | | OSS Rates ($) | | | |
| | | | | | | | | First | Add'l | First | Add'l | SOMEC | SOMAN | SOMAN | SOMAN | SOMAN | SOMAN |
| | | Nonrecurring Currently Combined Network Elements Switch -As-Is Charge - 56/64 kbps | | | UNCDX | UNCCC | | 21.75 | 21.75 | 32.28 | 10.96 | | | 26.94 | 12.76 | | |
| | | Nonrecurring Currently Combined Network Elements Switch -As-Is Charge - DS1 | | | UNC1X | UNCCC | | 21.75 | 21.75 | 32.28 | 10.96 | | | 26.94 | 12.76 | | |
| | | Nonrecurring Currently Combined Network Elements Switch -As-Is Charge - DS3 | | | UNC3X | UNCCC | | 21.75 | 21.75 | 32.28 | 10.96 | | | 26.94 | 12.76 | | |
| | | Nonrecurring Currently Combined Network Elements Switch -As-Is Charge - STS1 | | | UNCSX | UNCCC | | 21.75 | 21.75 | 32.28 | 10.96 | | | 26.94 | 12.76 | | |
| | Optional Features & Functions: | | | | | | | | | | | | | | | | |
| | | Clear Channel Capability Extended Frame Option - per DS1 | I | | U1TD1, ULDD1,UNC1X | CCOEF | | 0I | 0I | 0I | 0I | | | | | | |
| | | Clear Channel Capability Super FrameOption - per DS1 | I | | U1TD1, ULDD1,UNC1X | CCOSF | | 0I | 0I | 0I | 0I | | | | | | |
| | | Clear Channel Capability (SF/ESF) Option - Subsequent Activity - per DS1 | I | | ULDD1, U1TD1, UNC1X, USL | NRCCC | | 184.76S | 23.8S | 1.99S | 0.78S | | | 26.94 | 12.76 | | |
| | | C-bit Parity Option - Subsequent Activity - per DS3 | i | | U1TD3, ULDD3, UE3, UNC3X | NRCC3 | | 218.92S | 7.66S | .7576S | 0S | | | 26.94 | 12.76 | | |
| | MULTIPLEXERS | | | | | | | | | | | | | | | | |
| | | DS1 to DS0 Channel System per month | | | UNC1X | MQ1 | 146.69 | 197.78 | 140.06 | | | | | 26.94 | 12.76 | | |
| | | OCU-DP COCI (data) - DS1 to DS0 Channel System - per month (2.4-64kbs) used for a Local Loop | | | UDL | 1D1DD | 2.00 | 13.09 | 9.38 | | | | | | | | |
| | | OCU-DP COCI (data) - DS1 to DS0 Channel System - per month (2.4-64kbs) used for connection to a channelized DS1 Local Channel in the same SWC as collocation | | | U1TUD | 1D1DD | 2.00 | 13.09 | 9.38 | | | | | | | | |
| | | 2-wire ISDN COCI (BRITE) - DS1 to DS0 Channel Systsem - per month for a Local Loop | | | UDN | UC1CA | 3.59 | 13.09 | 9.38 | | | | | | | | |
| | | 2-wire ISDN COCI (BRITE) - DS1 to DS0 Channel Systsem - per month used for connection to a channelized DS1 Local Channel in the same SWC as collocation | | | U1TUB | UC1CA | 3.59 | 13.09 | 9.38 | | | | | | | | |
| | | Voice Grade COCI - DS1 to DS0 Channel System - per month used for a Local Loop | | | UEA | 1D1VG | 1.27 | 13.09 | 9.38 | | | | | | | | |
| | | Voice Grade COCI - DS1 to DS0 Channel System - per month used for connection to a channelized DS1 Local Channel in the same SWC as collocation | | | U1TUC | 1D1VG | 1.27 | 13.09 | 9.38 | | | | | | | | |
| | | DS3 to DS1 Channel System per month | | | UNC3X | MQ3 | 233.10 | 403.97 | 234.40 | | | | | 26.94 | 12.76 | | |
| | | STS-1 to DS1 Channel System per month | | | UNCSX | MQ3 | 233.10 | 403.97 | 234.40 | | | | | 26.94 | 12.76 | | |
| | | DS1 COCI used with Loop per month | | | USL | UC1D1 | 16.07 | 13.09 | 9.38 | | | | | | | | |
| | | DS1 COCI (used for connection to a channelized DS1 Local Channel in the same SWC as collocation) per month | | | U1TUA | UC1D1 | 16.07 | 13.09 | 9.38 | | | | | | | | |
| | | DS1 COCI used with Interoffice Channel per month | | | U1TD1 | UC1D1 | 16.07 | 13.09 | 9.38 | | | | | | | | |
| | | DS3 Interface Unit (DS1 COCI) used with Local Channel per month | | | ULDD1 | UC1D1 | 16.07 | 13.09 | 9.38 | | | | | | | | |
| | | | | | | | | | | | | | | 26.94 | 12.76 | | |
| | | | | | | | | | | | | | | 26.94 | 12.76 | | |
| UNBUNDLED LOCAL EXCHANGE SWITCHING(PORTS) | | | | | | | | | | | | | | | | | |
| | Exchange Ports | | | | | | | | | | | | | | | | |
| | NOTE: Although the Port Rate includes all available features in GA, KY, LA & TN, the desired features will need to be ordered using retail USOCs | | | | | | | | | | | | | | | | |
| | 2-WIRE VOICE GRADE LINE PORT RATES (RES) | | | | | | | | | | | | | | | | |
| | | Exchange Ports - 2-Wire Analog Line Port- Res. | | | UEPSR | UEPRL | 2.19 | 21.60 | 21.60 | | | | | 26.94 | 12.76 | | |
| | | Exchange Ports - 2-Wire Analog Line Port with Caller ID - Res. | | | UEPSR | UEPRC | 2.19 | 21.60 | 21.60 | | | | | 26.94 | 12.76 | | |
| | | Exchange Ports - 2-Wire Analog Line Port outgoing only - Res. | | | UEPSR | UEPRO | 2.19 | 21.60 | 21.60 | | | | | 26.94 | 12.76 | | |
| | | Exchange Ports - 2-Wire VG unbundled res, low usage line port with Caller ID (LUM) | | | UEPSR | UEPAP | 2.19 | 21.60 | 21.60 | | | | | 26.94 | 12.76 | | |
| | | 2-Wire voice unbundled Low Usage Line Port without Caller ID Capability | | | UEPSR | UEPRT | 2.19 | 21.60 | 21.60 | | | | | 26.94 | 12.76 | | |
| | | 2-Wire Voice Grade Unbundled Port without Caller ID capability, North Carolina | | | UEPSR | UEPRZ | 2.19 | 21.60 | 21.60 | | | | | | | | |

| UNBUNDLED NETWORK ELEMENTS - North Carolina | | | | | | | | | | | | | | Attachment: 2 | | Exhibit: A | |
|---|---|---|---|---|---|---|---|---|---|---|---|---|---|---|---|---|---|
| CATEGORY | RATE ELEMENTS | Interim | Zone | BCS | USOC | RATES ($) | | | | | Svc Order Submitted Elec per LSR | Svc Order Submitted Manually per LSR | Incremental Charge - Manual Svc Order vs. Electronic-1st | Incremental Charge - Manual Svc Order vs. Electronic-Add'l | Incremental Charge - Manual Svc Order vs. Electronic-Disc 1st | Incremental Charge - Manual Svc Order vs. Electronic-Disc Add'l |
| | | | | | | Rec | Nonrecurring | | Nonrecurring Disconnect | | OSS Rates ($) | | | | | |
| | | | | | | | First | Add'l | First | Add'l | SOMEC | SOMAN | SOMAN | SOMAN | SOMAN | SOMAN |
| | 2-Wire Voice Grade Unbundled Port with Caller ID capability, North Carolina | | | UEPSR | UEPRY | 2.19 | 21.60 | 21.60 | | | | | | | | |
| | Subsequent Activity | | | UEPSR | USASC | 0.00 | 0.00 | 0.00 | | | | | 26.94 | 12.76 | | |
| FEATURES | | | | | | | | | | | | | | | | |
| | All Available Vertical Features | | | UEPSR | UEPVF | 3.40 | 0.00 | 0.00 | | | | | 26.94 | 12.76 | | |
| 2-WIRE VOICE GRADE LINE PORT RATES (BUS) | | | | | | | | | | | | | | | | |
| | Exchange Ports - 2-Wire Analog Line Port without Caller ID - Bus | | | UEPSB | UEPBL | 2.19 | 21.60 | 21.60 | | | | | 26.94 | 12.76 | | |
| | Exchange Ports - 2-Wire VG unbundled Line Port with unbundled port with Caller+E484 ID - Bus. | | | UEPSB | UEPBC | 2.19 | 21.60 | 21.60 | | | | | 26.94 | 12.76 | | |
| | Exchange Ports - 2-Wire Analog Line Port outgoing only - Bus. | | | UEPSB | UEPBO | 2.19 | 21.60 | 21.60 | | | | | 26.94 | 12.76 | | |
| | Exhange Ports - 2-Wire VG unbundled incoming only port with Caller ID - Bus | | | UEPSB | UEPB1 | 2.19 | 21.60 | 21.60 | | | | | 26.94 | 12.76 | | |
| | 2-Wire voice unbundled Incoming Only Port without Caller ID Capability | | | UEPSB | UEPBE | 2.19 | 21.60 | 21.60 | | | | | 26.94 | 12.76 | | |
| | Subsequent Activity | | | UEPSB | USASC | 0.00 | 0.00 | 0.00 | | | | | | | | |
| FEATURES | | | | | | | | | | | | | | | | |
| | All Available Vertical Features | | | UEPSB | UEPVF | 3.40 | 0.00 | 0.00 | | | | | 26.94 | 12.76 | | |
| EXCHANGE PORT RATES (DID & PBX) | | | | | | | | | | | | | | | | |
| | 2-Wire VG Unbundled 2-Way PBX Trunk - Res | | | UEPSE | UEPRD | 2.18 | 21.60 | 21.60 | | | | | 26.94 | 12.76 | | |
| | 2-Wire VG Line Side Unbundled 2-Way PBX Trunk - Bus | | | UEPSP | UEPPC | 2.18 | 21.60 | 21.60 | | | | | 26.94 | 12.76 | | |
| | 2-Wire VG Line Side Unbundled Outward PBX Trunk - Bus | | | UEPSP | UEPPO | 2.18 | 21.60 | 21.60 | | | | | 26.94 | 12.76 | | |
| | 2-Wire VG Line Side Unbundled Incoming PBX Trunk - Bus | | | UEPSP | UEPP1 | 2.18 | 21.60 | 21.60 | | | | | 26.94 | 12.76 | | |
| | 2-Wire Analog Long Distance Terminal PBX Trunk - Bus | | | UEPSP | UEPLD | 2.18 | 21.60 | 21.60 | | | | | 26.94 | 12.76 | | |
| | 2-Wire Voice Unbundled PBX LD Terminal Ports | | | UEPSP | UEPLD | 2.18 | 21.60 | 21.60 | | | | | 26.94 | 12.76 | | |
| | 2-Wire Vice Unbundled 2-Way PBX Usage Port | | | UEPSP | UEPXA | 2.18 | 21.60 | 21.60 | | | | | 26.94 | 12.76 | | |
| | 2-Wire Voice Unbundled PBX Toll Terminal Hotel Ports | | | UEPSP | UEPXB | 2.18 | 21.60 | 21.60 | | | | | 26.94 | 12.76 | | |
| | 2-Wire Voice Unbundled PBX LD DDD Terminals Port | | | UEPSP | UEPXC | 2.18 | 21.60 | 21.60 | | | | | 26.94 | 12.76 | | |
| | 2-Wire Voice Unbundled PBX LD Terminal Switchboard Port | | | UEPSP | UEPXD | 2.18 | 21.60 | 21.60 | | | | | 26.94 | 12.76 | | |
| | 2-Wire Voice Unbundled PBX LD Terminal Switchboard IDD Capable Port | | | UEPSP | UEPXE | 2.18 | 21.60 | 21.60 | | | | | 26.94 | 12.76 | | |
| | 2-Wire Voice Unbundled 2-Way PBX Hotel/Hospital Economy Administrative Calling Port | | | UEPSP | UEPXL | 2.18 | 21.60 | 21.60 | | | | | 26.94 | 12.76 | | |
| | 2-Wire Voice Unbundled 2-Way PBX Hotel/Hospital Economy Room Calling Port | | | UEPSP | UEPXM | 2.18 | 21.60 | 21.60 | | | | | 26.94 | 12.76 | | |
| | 2-Wire Voice Unbundled 1-Way Outgoing PBX Hotel/Hospital Discount Room Calling Port | | | UEPSP | UEPXO | 2.18 | 21.60 | 21.60 | | | | | 26.94 | 12.76 | | |
| | 2-Wire Voice Unbundled 1-Way Outgoing PBX Measured Port | | | UEPSP | UEPXS | 2.18 | 21.60 | 21.60 | | | | | 26.94 | 12.76 | | |
| | Subsequent Activity | | | UEPSP | USASC | 0.00 | 0.00 | 0.00 | | | | | 26.94 | 12.76 | | |
| FEATURES | | | | | | | | | | | | | | | | |
| | All Available Vertical Features | | | UEPSP UEPSE | UEPVF | 3.40 | 0.00 | 0.00 | | | | | 26.94 | 12.76 | | |
| EXCHANGE PORT RATES (COIN) | | | | | | | | | | | | | | | | |
| | Exchange Ports - Coin Port | | | | | 2.59 | 21.60 | 21.60 | | | | | 26.94 | 12.76 | | |
| NOTE: Transmission/usage charges associated with POTS circuit switched usage will also apply to circuit switched voice and/or circuit switched data transmission by B-Channels associated with 2-wire ISDN ports. | | | | | | | | | | | | | | | | |
| NOTE: Access to B Channel or D Channel Packet capabilities will be available only through BFR/New Business Request Process. Rates for the packet capabilities will be determined via the Bona Fide Request/New Business Request Process. | | | | | | | | | | | | | | | | |
| UNBUNDLED LOCAL EXCHANGE SWITCHING(PORTS) | | | | | | | | | | | | | | | | |
| EXCHANGE PORT RATES | | | | | | | | | | | | | | | | |
| The DS1 Port rates below for 4-Wire DDITS Trunk Port and 4-Wire ISDN Port in this rate exhibit apply to the embedded base in place as of 10/2/03 until 4/1/04. After 4/1/04 these rates shall revert to tariff rates or a separate agreement. | | | | | | | | | | | | | | | | |
| Requests for 4-Wire DDITS Trunk Ports with 4-Wire ISDN DS1 Ports after the effective date of this amendment shall be provided pursuant to a separate agreement or tariff at BellSouth's discretion. | | | | | | | | | | | | | | | | |
| | Exchange Ports - 2-Wire DID Port | | | UEPEX | UEPP2 | 12.36 | 81.84 | 81.84 | | | | | 26.94 | 12.76 | | |
| | Exchange Ports - DDITS Port - 4-Wire DS1 Port with DID capability (E:4/1/2004) | | | UEPDD | UEPDD | 123.65 | 116.59 | 69.92 | | | | | 26.94 | 12.76 | | |
| | Exchange Ports - 2-Wire ISDN Port (See Notes below.) | | | UEPTX, UEPSX | U1PMA | 24.50 | 62.29 | 62.29 | | | | | 55.30 | 55.30 | | |
| | All Features Offered | | | UEPTX, UEPSX | UEPVF | 3.40 | 0.00 | 0.00 | | | | | | | | |
| | Exchange Ports - 2-Wire ISDN Port -- Channel Profiles | | | UEPTX, UEPSX | U1UMA | 0.00 | 0.00 | 0.00 | | | | | | | | |
| NOTE: Transmission/usage charges associated with POTS circuit switched usage will also apply to circuit switched voice and/or circuit switched data transmission by B-Channels associated with 2-wire ISDN ports. | | | | | | | | | | | | | | | | |
| NOTE: Access to B Channel or D Channel Packet capabilities will be available only through BFR/New Business Request Process. Rates for the packet capabilities will be determined via the Bona Fide Request/New Business Request Process. | | | | | | | | | | | | | | | | |
| EXCHANGE PORT RATES (continued) | | | | | | | | | | | | | | | | |

| UNBUNDLED NETWORK ELEMENTS - North Carolina | | | | | | | | | | | | | | Attachment: 2 | | Exhibit: A | |
|---|---|---|---|---|---|---|---|---|---|---|---|---|---|---|---|---|---|
| CATEGORY | | RATE ELEMENTS | Interim | Zone | BCS | USOC | RATES ($) | | | | | Svc Order Submitted Elec per LSR | Svc Order Submitted Manually per LSR | Incremental Charge - Manual Svc Order vs. Electronic-1st | Incremental Charge - Manual Svc Order vs. Electronic-Add'l | Incremental Charge - Manual Svc Order vs. Electronic-Disc 1st | Incremental Charge - Manual Svc Order vs. Electronic-Disc Add'l |
| | | | | | | | Rec | Nonrecurring | | Nonrecurring Disconnect | | OSS Rates ($) | | | | | |
| | | | | | | | | First | Add'l | First | Add'l | SOMEC | SOMAN | SOMAN | SOMAN | SOMAN | SOMAN |
| | | Exchange Ports - 4-Wire ISDN DS1 Port with Detailed E911 Locator Capability (E:4/1/2004) | | | UEPEX | UEPEX | 179.75 | 241.63 | 241.63 | | | | | 53.89 | 53.89 | | |
| | | Exchange Ports - 4-Wire ISDN DS1 Port (E:4/1/2004) | | | UEPDX | UEPDX | 179.75 | 241.63 | 241.63 | | | | | 53.89 | 53.89 | | |
| | | Physical Collocation - DS1 Cross-Connects | I | | UEPEX UEPDX | PE1P1 | 2.34 | 71.02 | 51.08 | | | | | 26.94 | 12.76 | | |
| | | Virtual collocation - Special Access & UNE, cross-connect per DS1 | | | UEPEX UEPDX | CNC1X | 0.97 | 71.02 | 51.08 | | | | | 26.94 | 12.76 | | |
| | **Detailed E911 with Locator Capability (required with UEPEX port)** | | | | | | | | | | | | | | | | |
| | | Unbundled Exchange Ports, 4-Wire ISDN DS1 Port - E911 Locator Capability - Initial Profile Establishment per CLEC per State | | | UEPEX | UEP1A | 0.00 | 1,802.00 | | | | | | 26.94 | 12.76 | | |
| | | Unbundled Exchange Ports, 4-Wire ISDN DS1 Port - E911 Locator Capability - Subsequent Profile Changes, Additions, Deletions | | | UEPEX | UEP1B | 0.00 | 174.99 | | | | | | 26.94 | 12.76 | | |
| | **New or Additional PRI Telephone Numbers** | | | | | | | | | | | | | | | | |
| | | Unbundled Exchange Ports, 4-Wire ISDN DS1 Port - E911 Locator Capability 2-way Telephone Numbers, per number in E911 profile [New or Additional] | | | UEPEX | UEP1C | | 1.17 | 1.17 | | | | | 26.94 | 12.76 | | |
| | | Unbundled Exchange Ports, 4-Wire ISDN DS1 Port - E911 Locator Capability - Outdial Telephone Numbers, per number in E911 profile [New or Additional] | | | UEPEX | UEP1D | | 28.17 | 28.17 | | | | | 26.94 | 12.76 | | |
| | | Unbundled Exchange Ports, 4-Wire ISDN DS1 Port - Inward Telephone Numbers - Inward Data Only Option [New or Additional] | | | UEPDX | UEP1E | 0.00 | 1.17 | 1.17 | | | | | 26.94 | 12.76 | | |
| | | Exchange Ports - 4-Wire ISDN DS1 Port - Subsequent [New] Inward Tel Numbers [Customer Testing Purposes] | | | UEPEX | PR7ZT | 0.00 | 56.33 | 56.33 | | | | | 26.94 | 12.76 | | |
| | **LOCAL NUMBER PORTABILITY** | | | | | | | | | | | | | | | | |
| | | Local Number Portability (1 per port) | | | UEPEX UEPDX | LNPCN | 1.75 | | | | | | | | | | |
| | **INTERFACE (Provsioning Only)** | | | | | | | | | | | | | | | | |
| | | Voice/Data | | | UEPEX | PR71V | 0.00 | 0.00 | 0.00 | | | | | 26.94 | 12.76 | | |
| | | Digital Data | | | UEPEX | PR71D | 0.00 | 0.00 | 0.00 | | | | | 26.94 | 12.76 | | |
| | | Inward Data | | | UEPDX | PR71E | 0.00 | 0.00 | 0.00 | | | | | 26.94 | 12.76 | | |
| | **New or Additional Channel** | | | | | | | | | | | | | | | | |
| | | New or Additional - Voice/Data "B" Channel | | | UEPEX | PR7BV | 0.00 | 36.92 | | | | | | 26.94 | 12.76 | | |
| | | New or Additional - Digital Data "B" Channel | | | UEPEX | PR7BF | 0.00 | 36.92 | | | | | | 26.94 | 12.76 | | |
| | | New or Additional Inward Data "B" Channel | | | UEPDX | PR7BD | 0.00 | 36.92 | | | | | | 26.94 | 12.76 | | |
| | | New or Additional Useage Sensitive Voice Data "B" Channel | | | UEPEX | PR7BS | 0.00 | | | | | | | 26.94 | 12.76 | | |
| | | New or Additional Useage Sensitive Digital Data "B" Channel | | | UEPEX | PR7BU | 0.00 | | | | | | | 26.94 | 12.76 | | |
| | | New or Additional PRI "D" Channel | | | UEPEX | PR7EX | 0.00 | 36.92 | | | | | | 26.94 | 12.76 | | |
| | **CALL TYPES** | | | | | | | | | | | | | | | | |
| | | Inward | | | UEPEX UEPDX | PR7C1 | 0.00 | 0.00 | 0.00 | | | | | 26.94 | 12.76 | | |
| | | Outward | | | UEPEX | PR7CO | 0.00 | 0.00 | 0.00 | | | | | 26.94 | 12.76 | | |
| | | Two-way | | | UEPEX | PR7CC | 0.00 | 0.00 | 0.00 | | | | | 26.94 | 12.76 | | |
| | **UNBUNDLED PORT with REMOTE CALL FORWARDING CAPABILITY** | | | | | | | | | | | | | | | | |
| | **UNBUNDLED REMOTE CALL FORWARDING SERVICE - RESIDENCE** | | | | | | | | | | | | | | | | |
| | | Unbundled Remote Call Forwarding Service, Area Calling, Res | | | UEPVR | UERAC | 2.19 | 21.60 | 21.60 | | | | | 26.94 | 12.76 | | |
| | | Unbundled Remote Call Forwarding Service, Local Calling - Res | | | UEPVR | UERLC | 2.19 | 21.60 | 21.60 | | | | | 26.94 | 12.76 | | |
| | | Unbundled Remote Call Forwarding Service, InterLATA - Res | | | UEPVR | UERTE | 2.19 | 21.60 | 21.60 | | | | | 26.94 | 12.76 | | |
| | | Unbundled Remote Call Forwarding Service, IntraLATA - Res | | | UEPVR | UERTR | 2.19 | 21.60 | 21.60 | | | | | 26.94 | 12.76 | | |
| | **Non-Recurring** | | | | | | | | | | | | | | | | |
| | | Unbundled Remote Call Forwarding Service - Conversion - Switch-as-Is | | | UEPVR | USAC2 | | 2.77 | 0.40 | | | | | 26.94 | 12.76 | | |
| | | Unbundled Remote Call Forwarding Service - Conversion with allowed change (PIC and LPIC) | | | UEPVR | USACC | | 2.77 | 0.40 | | | | | | | | |
| | **UNBUNDLED REMOTE CALL FORWARDING - Bus** | | | | | | | | | | | | | | | | |
| | | Unbundled Remote Call Forwarding Service, Area Calling - Bus | | | UEPVB | UERAC | 2.19 | 21.60 | 21.60 | | | | | 26.94 | 12.76 | | |
| | | Unbundled Remote Call Forwarding Service, Local Calling - Bus | | | UEPVB | UERLC | 2.19 | 21.60 | 21.60 | | | | | 26.94 | 12.76 | | |

| UNBUNDLED NETWORK ELEMENTS - North Carolina | | | | | | | | | | | | | | Attachment: 2 | | Exhibit: A | |
|---|---|---|---|---|---|---|---|---|---|---|---|---|---|---|---|---|---|
| CATEGORY | RATE ELEMENTS | Interim | Zone | BCS | USOC | RATES ($) | | | | | Svc Order Submitted Elec per LSR | Svc Order Submitted Manually per LSR | Incremental Charge - Manual Svc Order vs. Electronic-1st | Incremental Charge - Manual Svc Order vs. Electronic-Add'l | Incremental Charge - Manual Svc Order vs. Electronic-Disc 1st | Incremental Charge - Manual Svc Order vs. Electronic-Disc Add'l |
| | | | | | | Rec | Nonrecurring | | Nonrecurring Disconnect | | OSS Rates ($) | | | | | |
| | | | | | | | First | Add'l | First | Add'l | SOMEC | SOMAN | SOMAN | SOMAN | SOMAN | SOMAN |
| | Unbundled Remote Call Forwarding Service, InterLATA - Bus | | | UEPVB | UERTE | 2.19 | 21.60 | 21.60 | | | | | 26.94 | 12.76 | | |
| | Unbundled Remote Call Forwarding Service, IntraLATA - Bus | | | UEPVB | UERTR | 2.19 | 21.60 | 21.60 | | | | | 26.94 | 12.76 | | |
| | Unbundled Remote Call Forwarding Service Expanded and Exception Local Calling | | | UEPVB | UERVJ | 2.19 | 21.60 | 21.60 | | | | | 26.94 | 12.76 | | |
| Non-Recurring | | | | | | | | | | | | | | | | |
| | Unbundled Remote Call Forwarding Service - Conversion - Switch-as-is | | | UEPVB | USAC2 | | 2.77 | 0.40 | | | | | 26.94 | 12.76 | | |
| | Unbundled Remote Call Forwarding Service - Conversion with allowed change (PIC and LPIC) | | | UEPVB | USACC | | 2.77 | 0.40 | | | | | | | | |
| UNBUNDLED LOCAL SWITCHING, PORT USAGE | | | | | | | | | | | | | | | | |
| End Office Switching (Port Usage) | | | | | | | | | | | | | | | | |
| | End Office Switching Function, Per MOU | | | | | 0.0015 | | | | | | | | | | |
| | End Office Trunk Port - Shared, Per MOU | | | | | 0.00023 | | | | | | | | | | |
| Tandem Switching (Port Usage) (Local or Access Tandem) | | | | | | | | | | | | | | | | |
| | Tandem Switching Function Per MOU | | | | | 0.0006 | | | | | | | | | | |
| | Tandem Trunk Port - Shared, Per MOU | | | | | 0.0003 | | | | | | | | | | |
| | Tandem Switching Function Per MOU (Melded) | | | | | 0.00024618 | | | | | | | | | | |
| | Tandem Trunk Port - Shared, Per MOU (Melded) | | | | | 0.00012309 | | | | | | | | | | |
| | Melded Factor: 41.03% of the Tandem Rate | | | | | | | | | | | | | | | |
| Common Transport | | | | | | | | | | | | | | | | |
| | Common Transport - Per Mile, Per MOU | | | | | 0.00001 | | | | | | | | | | |
| | Common Transport - Facilities Termination Per MOU | | | | | 0.00034 | | | | | | | | | | |
| UNBUNDLED PORT/LOOP COMBINATIONS - COST BASED RATES | | | | | | | | | | | | | | | | |
| Cost Based Rates are applied where BellSouth is required by FCC and/or State Commission rule to provide Unbundled Local Switching or Switch Ports. | | | | | | | | | | | | | | | | |
| Features shall apply to the Unbundled Port/Loop Combination - Cost Based Rate section in the same manner as they are applied to the Stand-Alone Unbundled Port section of this Rate Exhibit. | | | | | | | | | | | | | | | | |
| End Office and Tandem Switching Usage and Common Transport Usage rates in the Port section of this rate exhibit shall apply to all combinations of loop/port network elements except for UNE Coin Port/Loop Combinations. | | | | | | | | | | | | | | | | |
| The first and additional Port nonrecurring charges apply to Not Currently Combined Combos. For Currently Combined Combos the nonrecurring charges shall be those identified in the Nonrecurring - Currently Combined sections. | | | | | | | | | | | | | | | | |
| 2-WIRE VOICE GRADE LOOP WITH 2-WIRE LINE PORT (RES) | | | | | | | | | | | | | | | | |
| UNE Port/Loop Combination Rates | | | | | | | | | | | | | | | | |
| | 2-Wire VG Loop/Port Combo - Zone 1 | | 1 | | | 13.03 | | | | | | | | | | |
| | 2-Wire VG Loop/Port Combo - Zone 2 | | 2 | | | 21.33 | | | | | | | | | | |
| | 2-Wire VG Loop/Port Combo - Zone 3 | | 3 | | | 32.61 | | | | | | | | | | |
| UNE Loop Rates | | | | | | | | | | | | | | | | |
| | 2-Wire Voice Grade Loop (SL1) - Zone 1 | | 1 | UEPRX | UEPLX | 10.75 | | | | | | | | | | |
| | 2-Wire Voice Grade Loop (SL1) - Zone 2 | | 2 | UEPRX | UEPLX | 19.05 | | | | | | | | | | |
| | 2-Wire Voice Grade Loop (SL1) - Zone 3 | | 3 | UEPRX | UEPLX | 30.33 | | | | | | | | | | |
| 2-Wire Voice Grade Line Port Rates (Res) | | | | | | | | | | | | | | | | |
| | 2-Wire voice unbundled port - residence | | | UEPRX | UEPRL | 2.28 | 79.59 | 63.97 | | | | | 40.18 | 9.45 | | |
| | 2-Wire voice unbundled port with Caller ID - res | | | UEPRX | UEPRC | 2.28 | 79.59 | 63.97 | | | | | 40.18 | 9.45 | | |
| | 2-Wire voice unbundled port outgoing only - res | | | UEPRX | UEPRO | 2.28 | 79.59 | 63.97 | | | | | 40.18 | 9.45 | | |
| | 2-Wire voice unbundles res, low usage line port with Caller ID (LUM) | | | UEPRX | UEPAP | 2.28 | 79.59 | 63.97 | | | | | 40.18 | 9.45 | | |
| | 2-Wire voice unbundled Low Usage Line Port without Caller ID Capability | | | UEPRX | UEPRT | 2.28 | 79.59 | 63.97 | | | | | 40.18 | 9.45 | | |
| | 2-Wire Voice Grade Unbundled Port without Caller ID capability, North Carolina | | | UEPRX | UEPRZ | 2.28 | 79.59 | 63.97 | | | | | | | | |
| | 2-Wire Voice Grade Unbundled Port without Caller ID capability, North Carolina | | | UEPRX | UEPRY | 2.28 | 79.59 | 63.97 | | | | | | | | |
| FEATURES | | | | | | | | | | | | | | | | |
| | All Features Offered | | | UEPRX | UEPVF | 3.40 | 0.00 | 0.00 | | | | | 40.18 | 9.45 | | |
| LOCAL NUMBER PORTABILITY | | | | | | | | | | | | | | | | |
| | Local Number Portability (1 per port) | | | UEPRX | LNPCX | 0.35 | | | | | | | | | | |
| NONRECURRING CHARGES (NRCs) - CURRENTLY COMBINED | | | | | | | | | | | | | | | | |
| | 2-Wire Voice Grade Loop / Line Port Combination - Conversion - Switch-as-is | | | UEPRX | USAC2 | | 2.77 | 0.40 | | | | | 40.18 | 9.45 | | |
| | 2-Wire Voice Grade Loop / Line Port Combination - Conversion - Switch with change | | | UEPRX | USACC | | 2.77 | 0.40 | | | | | 40.18 | 9.45 | | |
| | 2-Wire Voice Grade Loop / Line Port Combination - Conversion - Subsequent Database Update | | | | | | 1.42 | | | | | | 10.27 | | | |

## UNBUNDLED NETWORK ELEMENTS - North Carolina

Attachment: 2 | Exhibit: A

| CATEGORY | RATE ELEMENTS | Interim | Zone | BCS | USOC | RATES ($) | | | | | Svc Order Submitted Elec per LSR | Svc Order Submitted Manually per LSR | Incremental Charge - Manual Svc Order vs. Electronic-1st | Incremental Charge - Manual Svc Order vs. Electronic-Add'l | Incremental Charge - Manual Svc Order vs. Electronic-Disc 1st | Incremental Charge - Manual Svc Order vs. Electronic-Disc Add'l |
|---|---|---|---|---|---|---|---|---|---|---|---|---|---|---|---|---|
| | | | | | | Rec | Nonrecurring | | Nonrecurring Disconnect | | OSS Rates ($) | | | | | |
| | | | | | | | First | Add'l | First | Add'l | SOMEC | SOMAN | SOMAN | SOMAN | SOMAN | SOMAN |
| ADDITIONAL NRCs | | | | | | | | | | | | | | | | |
| | 2-Wire Voice Grade Loop/Line Port Combination - Subsequent Activity | | | UEPRX | USAS2 | 0.00 | 0.00 | 0.00 | | | | | 40.18 | 9.45 | | |
| | Unbundled Miscellaneous Rate Element, Tag Loop at End User Premise | | | UEPRX | URETL | | 8.33 | 0.83 | | | | | 26.94 | 12.76 | 0.00 | 0.00 |
| OFF/ON PREMISES EXTENSION CHANNELS | | | | | | | | | | | | | | | | |
| | 2 Wire Analog Voice Grade Extension Loop – Non-Design | | 1 | UEPRX | UEAEN | 12.11 | 57.99 | 42.37 | | | | | 26.94 | 12.76 | 0.00 | 0.00 |
| | 2 Wire Analog Voice Grade Extension Loop – Non-Design | | 2 | UEPRX | UEAEN | 21.24 | 57.99 | 42.37 | | | | | 26.94 | 12.76 | 0.00 | 0.00 |
| | 2 Wire Analog Voice Grade Extension Loop – Non-Design | | 3 | UEPRX | UEAEN | 33.65 | 57.99 | 42.37 | | | | | 26.94 | 12.76 | 0.00 | 0.00 |
| | 2 Wire Analog Voice Grade Extension Loop – Design | | 1 | UEPRX | UEAED | 14.97 | 142.97 | 106.56 | | | | | 26.94 | 12.76 | 0.00 | 0.00 |
| | 2 Wire Analog Voice Grade Extension Loop – Design | | 2 | UEPRX | UEAED | 25.93 | 142.97 | 106.56 | | | | | 26.94 | 12.76 | 0.00 | 0.00 |
| | 2 Wire Analog Voice Grade Extension Loop – Design | | 3 | UEPRX | UEAED | 40.81 | 142.97 | 106.56 | | | | | 26.94 | 12.76 | 0.00 | 0.00 |
| INTEROFFICE TRANSPORT | | | | | | | | | | | | | | | | |
| | Interoffice Transport - Dedicated - 2 Wire Voice Grade - Facility Termination | | | UEPRX | U1TV2 | 18.00 | 137.48 | 52.58 | | | | | 38.07 | 38.07 | | |
| | Interoffice Transport - Dedicated - 2 Wire Voice Grade - Per Mile or Fraction Mile | | | UEPRX | U1TVM | 0.0125 | 0.00 | 0.00 | | | | | | | | |
| 2-WIRE VOICE GRADE LOOP WITH 2-WIRE LINE PORT (BUS) | | | | | | | | | | | | | | | | |
| UNE Port/Loop Combination Rates | | | | | | | | | | | | | | | | |
| | 2-Wire VG Loop/Port Combo - Zone 1 | | 1 | | | 13.03 | | | | | | | | | | |
| | 2-Wire VG Loop/Port Combo - Zone 2 | | 2 | | | 21.33 | | | | | | | | | | |
| | 2-Wire VG Loop/Port Combo - Zone 3 | | 3 | | | 32.61 | | | | | | | | | | |
| UNE Loop Rates | | | | | | | | | | | | | | | | |
| | 2-Wire Voice Grade Loop (SL1) - Zone 1 | | 1 | UEPBX | UEPLX | 10.75 | | | | | | | | | | |
| | 2-Wire Voice Grade Loop (SL1) - Zone 2 | | 2 | UEPBX | UEPLX | 19.05 | | | | | | | | | | |
| | 2-Wire Voice Grade Loop (SL1) - Zone 3 | | 3 | UEPBX | UEPLX | 30.33 | | | | | | | | | | |
| 2-Wire Voice Grade Line Port (Bus) | | | | | | | | | | | | | | | | |
| | 2-Wire voice unbundled port without Caller ID - bus | | | UEPBX | UEPBL | 2.28 | 79.59 | 63.97 | | | | | 40.18 | 9.45 | | |
| | 2-Wire voice unbundled port with Caller + E484 ID - bus | | | UEPBX | UEPBC | 2.28 | 79.59 | 63.97 | | | | | 40.18 | 9.45 | | |
| | 2-Wire voice unbundled port outgoing only - bus | | | UEPBX | UEPBO | 2.28 | 79.59 | 63.97 | | | | | 40.18 | 9.45 | | |
| | 2-Wire voice unbundled incoming only port with Caller ID - Bus | | | UEPBX | UEPB1 | 2.28 | 79.59 | 63.97 | | | | | 40.18 | 9.45 | | |
| | 2-Wire voice unbundled Incoming Only Port without Caller ID Capability | | | UEPBX | UEPBE | 2.28 | 79.59 | 63.97 | | | | | 40.18 | 9.45 | | |
| LOCAL NUMBER PORTABILITY | | | | | | | | | | | | | | | | |
| | Local Number Portability (1 per port) | | | UEPBX | LNPCX | 0.35 | | | | | | | | | | |
| FEATURES | | | | | | | | | | | | | | | | |
| | All Features Offered | | | UEPBX | UEPVF | 3.40 | 0.00 | 0.00 | | | | | 40.18 | 9.45 | | |
| NONRECURRING CHARGES (NRCs) - CURRENTLY COMBINED | | | | | | | | | | | | | | | | |
| | 2-Wire Voice Grade Loop / Line Port Combination - Conversion - Switch-as-is | | | UEPBX | USAC2 | | 2.77 | 0.40 | | | | | 40.18 | 9.45 | | |
| | 2-Wire Voice Grade Loop / Line Port Combination - Conversion - Switch with change | | | UEPBX | USACC | | 2.77 | 0.40 | | | | | 40.18 | 9.45 | | |
| | 2-Wire Voice Grade Loop / Line Port Combination - Conversion - Subsequent Database Update | | | | | | 1.42 | | | | | | 10.27 | | | |
| ADDITIONAL NRCs | | | | | | | | | | | | | | | | |
| | 2-Wire Voice Grade Loop/Line Port Combination - Subsequent Activity | | | UEPBX | USAS2 | | 0.00 | 0.00 | | | | | 40.18 | 9.45 | | |
| | Unbundled Miscellaneous Rate Element, Tag Loop at End User Premise | | | UEPBX | URETL | | 8.33 | 0.83 | | | | | 26.94 | 12.76 | 0.00 | 0.00 |
| OFF/ON PREMISES EXTENSION CHANNELS | | | | | | | | | | | | | | | | |
| | 2 Wire Analog Voice Grade Extension Loop – Non-Design | | 1 | UEPBX | UEAEN | 12.11 | 57.99 | 42.37 | | | | | 26.94 | 12.76 | 0.00 | 0.00 |
| | 2 Wire Analog Voice Grade Extension Loop – Non-Design | | 2 | UEPBX | UEAEN | 21.24 | 57.99 | 42.37 | | | | | 26.94 | 12.76 | 0.00 | 0.00 |
| | 2 Wire Analog Voice Grade Extension Loop – Non-Design | | 3 | UEPBX | UEAEN | 33.65 | 57.99 | 42.37 | | | | | 26.94 | 12.76 | 0.00 | 0.00 |
| | 2 Wire Analog Voice Grade Extension Loop – Design | | 1 | UEPBX | UEAED | 14.97 | 142.97 | 106.56 | | | | | 26.94 | 12.76 | 0.00 | 0.00 |
| | 2 Wire Analog Voice Grade Extension Loop – Design | | 2 | UEPBX | UEAED | 25.93 | 142.97 | 106.56 | | | | | 26.94 | 12.76 | 0.00 | 0.00 |
| | 2 Wire Analog Voice Grade Extension Loop – Design | | 3 | UEPBX | UEAED | 40.81 | 142.97 | 106.56 | | | | | 26.94 | 12.76 | 0.00 | 0.00 |
| INTEROFFICE TRANSPORT | | | | | | | | | | | | | | | | |
| | Interoffice Transport - Dedicated - 2 Wire Voice Grade - Facility Termination | | | UEPBX | U1TV2 | 18.00 | 137.48 | 52.58 | | | | | 38.07 | 38.07 | | |

| UNBUNDLED NETWORK ELEMENTS - North Carolina | | | | | | | | | | | | | | Attachment: 2 | | Exhibit: A | |
|---|---|---|---|---|---|---|---|---|---|---|---|---|---|---|---|---|---|
| CATEGORY | | RATE ELEMENTS | Interim | Zone | BCS | USOC | RATES ($) | | | | | Svc Order Submitted Elec per LSR | Svc Order Submitted Manually per LSR | Incremental Charge - Manual Svc Order vs. Electronic-1st | Incremental Charge - Manual Svc Order vs. Electronic-Add'l | Incremental Charge - Manual Svc Order vs. Electronic-Disc 1st | Incremental Charge - Manual Svc Order vs. Electronic-Disc Add'l |
| | | | | | | | Rec | Nonrecurring | | Nonrecurring Disconnect | | OSS Rates ($) | | | | | |
| | | | | | | | | First | Add'l | First | Add'l | SOMEC | SOMAN | SOMAN | SOMAN | SOMAN | SOMAN |
| | | Interoffice Transport - Dedicated - 2 Wire Voice Grade - Per Mile or Fraction Mile | | | UEPBX | U1TVM | 0.0125 | 0.00 | 0.00 | | | | | | | | |
| | 2-WIRE VOICE GRADE LOOP WITH 2-WIRE LINE PORT (RES - PBX) | | | | | | | | | | | | | | | | |
| | UNE Port/Loop Combination Rates | | | | | | | | | | | | | | | | |
| | | 2-Wire VG Loop/Port Combo - Zone 1 | | 1 | | | 13.03 | | | | | | | | | | |
| | | 2-Wire VG Loop/Port Combo - Zone 2 | | 2 | | | 21.33 | | | | | | | | | | |
| | | 2-Wire VG Loop/Port Combo - Zone 3 | | 3 | | | 32.61 | | | | | | | | | | |
| | UNE Loop Rates | | | | | | | | | | | | | | | | |
| | | 2-Wire Voice Grade Loop (SL 1) - Zone 1 | | 1 | UEPRG | UEPLX | 10.75 | | | | | | | | | | |
| | | 2-Wire Voice Grade Loop (SL 1) - Zone 2 | | 2 | UEPRG | UEPLX | 19.05 | | | | | | | | | | |
| | | 2-Wire Voice Grade Loop (SL 1) - Zone 3 | | 3 | UEPRG | UEPLX | 30.33 | | | | | | | | | | |
| | 2-Wire Voice Grade Line Port Rates (RES - PBX) | | | | | | | | | | | | | | | | |
| | | 2-Wire VG Unbundled Combination 2-Way PBX Trunk Port - Res | | | UEPRG | UEPRD | 2.28 | 164.57 | 128.16 | | | | | 40.18 | 9.45 | | |
| | LOCAL NUMBER PORTABILITY | | | | | | | | | | | | | | | | |
| | | Local Number Portability (1 per port) | | | UEPRG | LNPCP | 3.15 | 0.00 | 0.00 | | | | | | | | |
| | FEATURES | | | | | | | | | | | | | | | | |
| | | All Features Offered | | | UEPRG | UEPVF | 3.40 | 0.00 | 0.00 | | | | | 40.18 | 9.45 | | |
| | NONRECURRING CHARGES (NRCs) - CURRENTLY COMBINED | | | | | | | | | | | | | | | | |
| | | 2-Wire Voice Grade Loop/ Line Port Combination (PBX) - Conversion - Switch-As-Is | | | UEPRG | USAC2 | | 2.77 | 0.40 | | | | | 40.18 | 9.45 | | |
| | | 2-Wire Voice Grade Loop/ Line Port Combination (PBX) - Conversion - Switch with Change | | | UEPRG | USACC | | 2.77 | 0.40 | | | | | 40.18 | 9.45 | | |
| | | 2-Wire Voice Grade Loop / Line Port Combination - Conversion - Subsequent Database Update | | | | | | 1.42 | | | | | | 10.27 | | | |
| | ADDITIONAL NRCs | | | | | | | | | | | | | | | | |
| | | 2-Wire Voice Grade Loop/ Line Port Combination (PBX) - Subsequent Activity | | | UEPRG | USAS2 | 0.00 | 0.00 | 0.00 | | | | | 40.18 | 9.45 | | |
| | | Unbundled Miscellaneous Rate Element, Tag Loop at End User Premise | | | UEPRG | URETL | | 8.33 | 0.83 | | | | | 26.94 | 12.76 | 0.00 | 0.00 |
| | OFF/ON PREMISES EXTENSION CHANNELS | | | | | | | | | | | | | | | | |
| | | Local Channel Voice grade, per termination | | 1 | UEPRG | P2JHX | 14.97 | 142.97 | 106.56 | | | | | 26.94 | 12.76 | 0.00 | 0.00 |
| | | Local Channel Voice grade, per termination | | 2 | UEPRG | P2JHX | 25.93 | 142.97 | 106.56 | | | | | 26.94 | 12.76 | 0.00 | 0.00 |
| | | Local Channel Voice grade, per termination | | 3 | UEPRG | P2JHX | 40.81 | 142.97 | 106.56 | | | | | 26.94 | 12.76 | 0.00 | 0.00 |
| | | Non-Wire Direct Serve Channel Voice Grade | | 1 | UEPRG | SDD2X | 14.62 | 252.06 | 109.08 | | | | | 26.94 | 12.76 | 0.00 | 0.00 |
| | | Non-Wire Direct Serve Channel Voice Grade | | 2 | UEPRG | SDD2X | 23.86 | 126.03 | 54.54 | | | | | 26.94 | 12.76 | 0.00 | 0.00 |
| | | Non-Wire Direct Serve Channel Voice Grade | | 3 | UEPRG | SDD2X | 36.40 | 126.03 | 54.54 | | | | | 26.94 | 12.76 | 0.00 | 0.00 |
| | INTEROFFICE TRANSPORT | | | | | | | | | | | | | | | | |
| | | Interoffice Transport - Dedicated - 2 Wire Voice Grade - Facility Termination | | | UEPRG | U1TV2 | 18.00 | 137.48 | 52.58 | | | | | 38.07 | 38.07 | | |
| | | Interoffice Transport - Dedicated - 2 Wire Voice Grade - Per Mile or Fraction Mile | | | UEPRG | U1TVM | 0.0125 | 0.00 | 0.00 | | | | | | | | |
| | 2-WIRE VOICE GRADE LOOP WITH 2-WIRE LINE PORT (BUS - PBX) | | | | | | | | | | | | | | | | |
| | UNE Port/Loop Combination Rates | | | | | | | | | | | | | | | | |
| | | 2-Wire VG Loop/Port Combo - Zone 1 | | 1 | | | 13.03 | | | | | | | | | | |
| | | 2-Wire VG Loop/Port Combo - Zone 2 | | 2 | | | 21.33 | | | | | | | | | | |
| | | 2-Wire VG Loop/Port Combo - Zone 3 | | 3 | | | 32.61 | | | | | | | | | | |
| | UNE Loop Rates | | | | | | | | | | | | | | | | |
| | | 2-Wire Voice Grade Loop (SL 1) - Zone 1 | | 1 | UEPPX | UEPLX | 10.75 | | | | | | | | | | |
| | | 2-Wire Voice Grade Loop (SL 1) - Zone 2 | | 2 | UEPPX | UEPLX | 19.05 | | | | | | | | | | |
| | | 2-Wire Voice Grade Loop (SL 1) - Zone 3 | | 3 | UEPPX | UEPLX | 30.33 | | | | | | | | | | |
| | 2-Wire Voice Grade Line Port Rates (BUS - PBX) | | | | | | | | | | | | | | | | |
| | | Line Side Unbundled Combination 2-Way PBX Trunk Port - Bus | | | UEPPX | UEPPC | 2.28 | 164.57 | 128.16 | | | | | 40.18 | 9.45 | | |
| | | Line Side Unbundled Outward PBX Trunk Port - Bus | | | UEPPX | UEPPO | 2.28 | 164.57 | 128.16 | | | | | 40.18 | 9.45 | | |
| | | Line Side Unbundled Incoming PBX Trunk Port - Bus | | | UEPPX | UEPP1 | 2.28 | 164.57 | 128.16 | | | | | 40.18 | 9.45 | | |
| | | 2-Wire Voice Unbundled PBX LD Terminal Ports | | | UEPPX | UEPLD | 2.28 | 164.57 | 128.16 | | | | | 40.18 | 9.45 | | |
| | | 2-Wire Voice Unbundled 2-Way Combination PBX Usage Port | | | UEPPX | UEPXA | 2.28 | 164.57 | 128.16 | | | | | 40.18 | 9.45 | | |
| | | 2-Wire Voice Unbundled PBX Toll Terminal Hotel Ports | | | UEPPX | UEPXB | 2.28 | 164.57 | 128.16 | | | | | 40.18 | 9.45 | | |

| UNBUNDLED NETWORK ELEMENTS - North Carolina | | | | | | | | | | | | | | Attachment: 2 | | Exhibit: A | |
|---|---|---|---|---|---|---|---|---|---|---|---|---|---|---|---|---|---|
| CATEGORY | RATE ELEMENTS | Interim | Zone | BCS | USOC | RATES ($) | | | | | Svc Order Submitted Elec per LSR | Svc Order Submitted Manually per LSR | Incremental Charge - Manual Svc Order vs. Electronic-1st | Incremental Charge - Manual Svc Order vs. Electronic-Add'l | Incremental Charge - Manual Svc Order vs. Electronic-Disc 1st | Incremental Charge - Manual Svc Order vs. Electronic-Disc Add'l |
| | | | | | | Rec | Nonrecurring | | Nonrecurring Disconnect | | OSS Rates ($) | | | | | |
| | | | | | | | First | Add'l | First | Add'l | SOMEC | SOMAN | SOMAN | SOMAN | SOMAN | SOMAN |
| | 2-Wire Voice Unbundled PBX LD DDD Terminals Port | | | UEPPX | UEPXC | 2.28 | 164.57 | 128.16 | | | | | 40.18 | 9.45 | | |
| | 2-Wire Voice Unbundled PBX LD Terminal Switchboard Port | | | UEPPX | UEPXD | 2.28 | 164.57 | 128.16 | | | | | 40.18 | 9.45 | | |
| | 2-Wire Voice Unbundled PBX LD Terminal Switchboard IDD Capable Port | | | UEPPX | UEPXE | 2.28 | 164.57 | 128.16 | | | | | 40.18 | 9.45 | | |
| | 2-Wire Voice Unbundled 2-Way PBX Hotel/Hospital Economy Administrative Calling Port | | | UEPPX | UEPXL | 2.28 | 164.57 | 128.16 | | | | | 40.18 | 9.45 | | |
| | 2-Wire Voice Unbundled 2-Way PBX Hotel/Hospital Economy Room Calling Port | | | UEPPX | UEPXM | 2.28 | 164.57 | 128.16 | | | | | 40.18 | 9.45 | | |
| | 2-Wire Voice Unbundled 1-Way Outgoing PBX Hotel/Hospital Discount Room Calling Port | | | UEPPX | UEPXO | 2.28 | 164.57 | 128.16 | | | | | 40.18 | 9.45 | | |
| | 2-Wire Voice Unbundled 1-Way Outgoing PBX Measured Port | | | UEPPX | UEPXS | 2.28 | 164.57 | 128.16 | | | | | 40.18 | 9.45 | | |
| **LOCAL NUMBER PORTABILITY** | | | | | | | | | | | | | | | | |
| | Local Number Portability (1 per port) | | | UEPPX | LNPCP | 3.15 | 0.00 | 0.00 | | | | | 40.18 | 9.45 | | |
| **FEATURES** | | | | | | | | | | | | | | | | |
| | All Features Offered | | | UEPPX | UEPVF | 3.40 | 0.00 | 0.00 | | | | | 40.18 | 9.45 | | |
| **NONRECURRING CHARGES (NRCs) - CURRENTLY COMBINED** | | | | | | | | | | | | | | | | |
| | 2-Wire Voice Grade Loop/ Line Port Combination (PBX) - Conversion - Switch-As-Is | | | UEPPX | USAC2 | | 2.77 | 0.40 | | | | | 40.18 | 9.45 | | |
| | 2-Wire Voice Grade Loop/ Line Port Combination (PBX) - Conversion - Switch with Change | | | UEPPX | USACC | | 2.77 | 0.40 | | | | | 40.18 | 9.45 | | |
| | 2-Wire Voice Grade Loop / Line Port Combination - Conversion - Subsequent Database Update | | | | | | 1.42 | | | | | | 10.27 | | | |
| **ADDITIONAL NRCs** | | | | | | | | | | | | | | | | |
| | 2-Wire Voice Grade Loop/ Line Port Combination (PBX) - Subsequent Activity | | | UEPPX | USAS2 | 0.00 | 0.00 | 0.00 | | | | | 40.18 | 9.45 | | |
| | Unbundled Miscellaneous Rate Element, Tag Loop at End User Premise | | | UEPPX | URETL | | 8.33 | 0.83 | | | | | 26.94 | 12.76 | 0.00 | 0.00 |
| **OFF/ON PREMISES EXTENSION CHANNELS** | | | | | | | | | | | | | | | | |
| | Local Channel Voice grade, per termination | | 1 | UEPPX | P2JHX | 14.97 | 142.97 | 106.56 | | | | | 26.94 | 12.76 | 0.00 | 0.00 |
| | Local Channel Voice grade, per termination | | 2 | UEPPX | P2JHX | 25.93 | 142.97 | 106.56 | | | | | 26.94 | 12.76 | 0.00 | 0.00 |
| | Local Channel Voice grade, per termination | | 3 | UEPPX | P2JHX | 40.81 | 142.97 | 106.56 | | | | | 26.94 | 12.76 | 0.00 | 0.00 |
| | Non-Wire Direct Serve Channel Voice Grade | | 1 | UEPPX | SDD2X | 14.62 | 252.06 | 109.08 | | | | | 26.94 | 12.76 | 0.00 | 0.00 |
| | Non-Wire Direct Serve Channel Voice Grade | | 2 | UEPPX | SDD2X | 23.86 | 126.03 | 54.54 | | | | | 26.94 | 12.76 | 0.00 | 0.00 |
| | Non-Wire Direct Serve Channel Voice Grade | | 3 | UEPPX | SDD2X | 36.40 | 126.03 | 54.54 | | | | | 26.94 | 12.76 | 0.00 | 0.00 |
| **INTEROFFICE TRANSPORT** | | | | | | | | | | | | | | | | |
| | Interoffice Transport - Dedicated - 2 Wire Voice Grade - Facility Termination | | | UEPPX | U1TV2 | 18.00 | 137.48 | 52.58 | | | | | 38.07 | 38.07 | | |
| | Interoffice Transport - Dedicated - 2 Wire Voice Grade - Per Mile or Fraction Mile | | | UEPPX | U1TVM | 0.0125 | 0.00 | 0.00 | | | | | | | | |
| **2-WIRE VOICE GRADE LOOP WITH 2-WIRE ANALOG LINE COIN PORT** | | | | | | | | | | | | | | | | |
| **UNE Port/Loop Combination Rates** | | | | | | | | | | | | | | | | |
| | 2-Wire VG Coin Port/Loop Combo – Zone 1 | | 1 | | | 13.03 | | | | | | | | | | |
| | 2-Wire VG Coin Port/Loop Combo – Zone 2 | | 2 | | | 21.33 | | | | | | | | | | |
| | 2-Wire VG Coin Port/Loop Combo – Zone 3 | | 3 | | | 32.61 | | | | | | | | | | |
| **UNE Loop Rates** | | | | | | | | | | | | | | | | |
| | 2-Wire Voice Grade Loop (SL1) - Zone 1 | | 1 | UEPCO | UEPLX | 10.75 | | | | | | | | | | |
| | 2-Wire Voice Grade Loop (SL1) - Zone 2 | | 2 | UEPCO | UEPLX | 19.05 | | | | | | | | | | |
| | 2-Wire Voice Grade Loop (SL1) - Zone 3 | | 3 | UEPCO | UEPLX | 30.33 | | | | | | | | | | |
| **2-Wire Voice Grade Line Ports (COIN)** | | | | | | | | | | | | | | | | |
| | 2-Wire Coin 2-Way without Operator Screening and without Blocking (NC) | | | UEPCO | UEPND | 2.28 | 79.59 | 63.97 | | | | | 40.18 | 9.45 | | |
| | 2-Wire Coin 2-Way with Operator Screening (NC) | | | UEPCO | UEPNC | 2.28 | 79.59 | 63.97 | | | | | 40.18 | 9.45 | | |
| | 2-Wire Coin 2-Way with Operator Screening and Blocking: 011, 900/976, 1+DDD (NC, TN) | | | UEPCO | UEPRP | 2.28 | 79.59 | 63.97 | | | | | 40.18 | 9.45 | | |
| | 2-Wire Coin 2-Way with Operator Screening and 011 Blocking (NC) | | | UEPCO | UEPNB | 2.28 | 79.59 | 63.97 | | | | | 40.18 | 9.45 | | |
| | 2-Wire Coin 2-Way with Operator Screening: 900 Blocking: 900/976, 1+DDD, 011+, and Local (NC, TN) | | | UEPCO | UEPCA | 2.28 | 79.59 | 63.97 | | | | | 40.18 | 9.45 | | |

| UNBUNDLED NETWORK ELEMENTS - North Carolina | | | | | | | | | | | | | | Attachment: 2 | | Exhibit: A | |
|---|---|---|---|---|---|---|---|---|---|---|---|---|---|---|---|---|---|
| CATEGORY | | RATE ELEMENTS | Interim | Zone | BCS | USOC | RATES ($) | | | | | Svc Order Submitted Elec per LSR | Svc Order Submitted Manually per LSR | Incremental Charge - Manual Svc Order vs. Electronic-1st | Incremental Charge - Manual Svc Order vs. Electronic-Add'l | Incremental Charge - Manual Svc Order vs. Electronic-Disc 1st | Incremental Charge - Manual Svc Order vs. Electronic-Disc Add'l |
| | | | | | | | Rec | Nonrecurring | | Nonrecurring Disconnect | | OSS Rates ($) | | | | | |
| | | | | | | | | First | Add'l | First | Add'l | SOMEC | SOMAN | SOMAN | SOMAN | SOMAN | SOMAN |
| | | 2-Wire Coin Outward with Operator Screening and 011 Blocking (NC) | | | UEPCO | UEPNE | 2.28 | 79.59 | 63.97 | | | | | 40.18 | 9.45 | | |
| | | 2-Wire Coin Outward with Operator Screening and Blocking: 900/976, 1+DDD, 011+, and Local (NC) | | | UEPCO | UEPCL | 2.28 | 79.59 | 63.97 | | | | | 40.18 | 9.45 | | |
| | | 2-Wire 2-Way Smartline with 900/976 (all states except LA) | | | UEPCO | UEPCK | 2.28 | 79.59 | 63.97 | | | | | 40.18 | 9.45 | | |
| | | 2-Wire Coin Outward Smartline with 900/976 (all states except LA) | | | UEPCO | UEPCR | 2.28 | 79.59 | 63.97 | | | | | 40.18 | 9.45 | | |
| | **ADDITIONAL UNE COIN PORT/LOOP (RC)** | | | | | | | | | | | | | | | | |
| | | UNE Coin Port/Loop Combo Usage (Flat Rate) | | | UEPCO | URECU | 3.70 | 0.00 | 0.00 | 0.00 | 0.00 | | | 40.18 | 9.45 | | |
| | **LOCAL NUMBER PORTABILITY** | | | | | | | | | | | | | | | | |
| | | Local Number Portability (1 per port) | | | UEPCO | LNPCX | 0.35 | | | | | | | | | | |
| | **NONRECURRING CHARGES - CURRENTLY COMBINED** | | | | | | | | | | | | | | | | |
| | | 2-Wire Voice Grade Loop / Line Port Combination - Conversion - Switch-as-is | | | UEPCO | USAC2 | | 2.77 | 0.40 | | | | | 40.18 | 9.45 | | |
| | | 2-Wire Voice Grade Loop / Line Port Combination - Conversion - Switch with change | | | UEPCO | USACC | | 2.77 | 0.40 | | | | | 40.18 | 9.45 | | |
| | | 2-Wire Voice Grade Loop / Line Port Combination - Conversion - Subsequent Database Update | | | | | | 1.42 | | | | | | | | | |
| | **ADDITIONAL NRCs** | | | | | | | | | | | | | | | | |
| | | 2-Wire Voice Grade Loop/Line Port Combination - Subsequent Activity | | | UEPCO | USAS2 | | 0.00 | 0.00 | | | | | 40.18 | 9.45 | | |
| | | Unbundled Miscellaneous Rate Element, Tag Loop at End User Premise | | | UEPCO | URETL | | 8.33 | 0.83 | | | | | 26.94 | 12.76 | 0.00 | 0.00 |
| | **2-WIRE VOICE LOOP/ 2WIRE VOICE GRADE IO TRANSPORT/ 2-WIRE LINE PORT (RES)** | | | | | | | | | | | | | | | | |
| | **UNE Port/Loop Combination Rates** | | | | | | | | | | | | | | | | |
| | | 2-Wire VG Loop/IO Tranport/Port Combo - Zone 1 | | 1 | | | 17.16 | | | | | | | | | | |
| | | 2-Wire VG Loop/IO Tranport/Port Combo - Zone 2 | | 2 | | | 28.12 | | | | | | | | | | |
| | | 2-Wire VG Loop/IO Tranport/Port Combo - Zone 3 | | 3 | | | 43.00 | | | | | | | | | | |
| | **UNE Loop Rates** | | | | | | | | | | | | | | | | |
| | | 2-Wire Voice Grade Loop (SL2) - Zone 1 | | 1 | UEPFR | UECF2 | 14.97 | | | | | | | | | | |
| | | 2-Wire Voice Grade Loop (SL2) - Zone 2 | | 2 | UEPFR | UECF2 | 25.93 | | | | | | | | | | |
| | | 2-Wire Voice Grade Loop (SL2) - Zone 3 | | 3 | UEPFR | UECF2 | 40.81 | | | | | | | | | | |
| | **2-Wire Voice Grade Line Port Rates (Res)** | | | | | | | | | | | | | | | | |
| | | 2-Wire voice unbundled port - residence | | | UEPFR | UEPRL | 2.19 | 225.00 | 225.00 | | | | | 40.18 | 9.45 | | |
| | | 2-Wire voice unbundled port with Caller ID - res | | | UEPFR | UEPRC | 2.19 | 225.00 | 225.00 | | | | | 40.18 | 9.45 | | |
| | | 2-Wire voice unbundled port outgoing only - res | | | UEPFR | UEPRO | 2.19 | 225.00 | 225.00 | | | | | 40.18 | 9.45 | | |
| | | 2-Wire voice unbundles res, low usage line port with Caller ID (LUM) | | | UEPFR | UEPAP | 2.19 | 225.00 | 225.00 | | | | | 40.18 | 9.45 | | |
| | **INTEROFFICE TRANSPORT** | | | | | | | | | | | | | | | | |
| | | Interoffice Transport - Dedicated - 2 Wire Voice Grade - Facility Termination | | | UEPFR | U1TV2 | 18.00 | 140.00 | 71.00 | | | | | | | | |
| | | Interoffice Transport - Dedicated - 2 Wire Voice Grade - Per Mile or Fraction Mile | | | UEPFR | 1L5XX | 0.0125 | | | | | | | | | | |
| | **FEATURES** | | | | | | | | | | | | | | | | |
| | | All Features Offered | | | UEPFR | UEPVF | 3.40 | 0.00 | 0.00 | | | | | 40.18 | 9.45 | | |
| | **LOCAL NUMBER PORTABILITY** | | | | | | | | | | | | | | | | |
| | | Local Number Portability (1 per port) | | | UEPFR | LNPCX | 0.35 | | | | | | | | | | |
| | **NONRECURRING CHARGES (NRCs) - CURRENTLY COMBINED** | | | | | | | | | | | | | | | | |
| | | 2-Wire Loop / Dedicated IO Transport / 2 Wire Line Port Combination - Conversion - Switch-as-is | | | UEPFR | USAC2 | | 9.03 | 1.87 | | | | | 40.18 | 9.45 | | |
| | | 2-Wire Loop / Dedicated IO Transport / 2 Wire Line Port Combination - Conversion - Switch-With-Change | | | UEPFR | USACC | | 9.03 | 1.87 | | | | | 40.18 | 9.45 | | |
| | | Unbundled Miscellaneous Rate Element, Tag Designed Loop at End User Premise | | | UEPFR | URETN | | 11.20 | 1.10 | | | | | 26.94 | 12.76 | 0.00 | 0.00 |
| | **2-WIRE VOICE LOOP/ 2WIRE VOICE GRADE IO TRANSPORT/ 2-WIRE LINE PORT (BUS)** | | | | | | | | | | | | | | | | |
| | **UNE Port/Loop Combination Rates** | | | | | | | | | | | | | | | | |
| | | 2-Wire VG Loop/IO Tranport/Port Combo - Zone 1 | | 1 | | | 17.16 | | | | | | | | | | |
| | | 2-Wire VG Loop/IO Tranport/Port Combo - Zone 2 | | 2 | | | 28.12 | | | | | | | | | | |
| | | 2-Wire VG Loop/IO Tranport/Port Combo - Zone 3 | | 3 | | | 43.00 | | | | | | | | | | |

| UNBUNDLED NETWORK ELEMENTS - North Carolina | | | | | | | | | | | | | | Attachment: 2 | | Exhibit: A | |
|---|---|---|---|---|---|---|---|---|---|---|---|---|---|---|---|---|---|
| CATEGORY | RATE ELEMENTS | Interim | Zone | BCS | USOC | RATES ($) | | | | | Svc Order Submitted Elec per LSR | Svc Order Submitted Manually per LSR | Incremental Charge - Manual Svc Order vs. Electronic-1st | Incremental Charge - Manual Svc Order vs. Electronic-Add'l | Incremental Charge - Manual Svc Order vs. Electronic-Disc 1st | Incremental Charge - Manual Svc Order vs. Electronic-Disc Add'l |
| | | | | | | Rec | Nonrecurring | | Nonrecurring Disconnect | | OSS Rates ($) | | | | | |
| | | | | | | | First | Add'l | First | Add'l | SOMEC | SOMAN | SOMAN | SOMAN | SOMAN | SOMAN |
| UNE Loop Rates | | | | | | | | | | | | | | | | |
| | 2-Wire Voice Grade Loop (SL2) - Zone 1 | | 1 | UEPFB | UECF2 | 14.97 | | | | | | | | | | |
| | 2-Wire Voice Grade Loop (SL2) - Zone 2 | | 2 | UEPFB | UECF2 | 25.93 | | | | | | | | | | |
| | 2-Wire Voice Grade Loop (SL2) - Zone 3 | | 3 | UEPFB | UECF2 | 40.81 | | | | | | | | | | |
| 2-Wire Voice Grade Line Port (Bus) | | | | | | | | | | | | | | | | |
| | 2-Wire voice unbundled port without Caller ID - bus | | | UEPFB | UEPBL | 2.19 | 225.00 | 225.00 | | | | | 40.18 | 9.45 | | |
| | 2-Wire voice unbundled port with Caller + E484 ID - bus | | | UEPFB | UEPBC | 2.19 | 225.00 | 225.00 | | | | | 40.18 | 9.45 | | |
| | 2-Wire voice unbundled port outgoing only - bus | | | UEPFB | UEPBO | 2.19 | 225.00 | 225.00 | | | | | 40.18 | 9.45 | | |
| | 2-Wire voice unbundled incoming only port with Caller ID - Bus | | | UEPFB | UEPB1 | 2.19 | 225.00 | 225.00 | | | | | 40.18 | 9.45 | | |
| LOCAL NUMBER PORTABILITY | | | | | | | | | | | | | | | | |
| | Local Number Portability (1 per port) | | | UEPFB | LNPCX | 0.35 | | | | | | | | | | |
| INTEROFFICE TRANSPORT | | | | | | | | | | | | | | | | |
| | Interoffice Transport - Dedicated - 2 Wire Voice Grade - Facility Termination | | | UEPFB | U1TV2 | 18.00 | 140.00 | 71.00 | | | | | | | | |
| | Interoffice Transport - Dedicated - 2 Wire Voice Grade - Per Mile or Fraction Mile | | | UEPFB | 1L5XX | 0.0125 | | | | | | | | | | |
| FEATURES | | | | | | | | | | | | | | | | |
| | All Features Offered | | | UEPFB | UEPVF | 3.40 | 0.00 | 0.00 | | | | | 40.18 | 9.45 | | |
| NONRECURRING CHARGES (NRCs) - CURRENTLY COMBINED | | | | | | | | | | | | | | | | |
| | 2-Wire Loop / Dedicated IO Transport / 2 Wire Line Port Combination - Conversion - Switch-as-is | | | UEPFB | USAC2 | | 9.03 | 1.87 | | | | | 40.18 | 9.45 | | |
| | 2-Wire Loop / Dedicated IO Transport / 2 Wire Line Port Combination - Conversion - Switch with change | | | UEPFB | USACC | | 9.03 | 1.87 | | | | | 40.18 | 9.45 | | |
| | Unbundled Miscellaneous Rate Element, Tag Designed Loop at End User Premise | | | UEPFB | URETN | | 11.20 | 1.10 | | | | | 26.94 | 12.76 | 0.00 | 0.00 |
| 2-WIRE VOICE LOOP/ 2WIRE VOICE GRADE IO TRANSPORT/ 2-WIRE LINE PORT (PBX) | | | | | | | | | | | | | | | | |
| UNE Port/Loop Combination Rates | | | | | | | | | | | | | | | | |
| | 2-Wire VG Loop/IO Tranport/Port Combo - Zone 1 | | 1 | | | 17.16 | | | | | | | | | | |
| | 2-Wire VG Loop/IO Tranport/Port Combo - Zone 2 | | 2 | | | 28.12 | | | | | | | | | | |
| | 2-Wire VG Loop/IO Tranport/Port Combo - Zone 3 | | 3 | | | 43.00 | | | | | | | | | | |
| UNE Loop Rates | | | | | | | | | | | | | | | | |
| | 2-Wire Voice Grade Loop (SL2) - Zone 1 | | 1 | UEPFP | UECF2 | 14.97 | | | | | | | | | | |
| | 2-Wire Voice Grade Loop (SL2) - Zone 2 | | 2 | UEPFP | UECF2 | 25.93 | | | | | | | | | | |
| | 2-Wire Voice Grade Loop (SL2) - Zone 3 | | 3 | UEPFP | UECF2 | 40.81 | | | | | | | | | | |
| 2-Wire Voice Grade Line Port Rates (BUS - PBX) | | | | | | | | | | | | | | | | |
| | Line Side Unbundled Combination 2-Way PBX Trunk Port - Bus | | | UEPFP | UEPPC | 2.18 | 225.00 | 225.00 | | | | | 40.18 | 9.45 | | |
| | Line Side Unbundled Outward PBX Trunk Port - Bus | | | UEPFP | UEPPO | 2.18 | 225.00 | 225.00 | | | | | 40.18 | 9.45 | | |
| | Line Side Unbundled Incoming PBX Trunk Port - Bus | | | UEPFP | UEPP1 | 2.18 | 225.00 | 225.00 | | | | | 40.18 | 9.45 | | |
| | 2-Wire Voice Unbundled PBX LD Terminal Ports | | | UEPFP | UEPLD | 2.18 | 225.00 | 225.00 | | | | | 40.18 | 9.45 | | |
| | 2-Wire Voice Unbundled 2-Way Combination PBX Usage Port | | | UEPFP | UEPXA | 2.18 | 225.00 | 225.00 | | | | | 40.18 | 9.45 | | |
| | 2-Wire Voice Unbundled PBX Toll Terminal Hotel Ports | | | UEPFP | UEPXB | 2.18 | 225.00 | 225.00 | | | | | 40.18 | 9.45 | | |
| | 2-Wire Voice Unbundled PBX LD DDD Terminals Port | | | UEPFP | UEPXC | 2.18 | 225.00 | 225.00 | | | | | 40.18 | 9.45 | | |
| | 2-Wire Voice Unbundled PBX LD Terminal Switchboard Port | | | UEPFP | UEPXD | 2.18 | 225.00 | 225.00 | | | | | 40.18 | 9.45 | | |
| | 2-Wire Voice Unbundled PBX LD Terminal Switchboard IDD Capable Port | | | UEPFP | UEPXE | 2.18 | 225.00 | 225.00 | | | | | 40.18 | 9.45 | | |
| | 2-Wire Voice Unbundled 2-Way PBX Hotel/Hospital Economy Administrative Calling Port | | | UEPFP | UEPXL | 2.18 | 225.00 | 225.00 | | | | | 40.18 | 9.45 | | |
| | 2-Wire Voice Unbundled 2-Way PBX Hotel/Hospital Economy Room Calling Port | | | UEPFP | UEPXM | 2.18 | 225.00 | 225.00 | | | | | 40.18 | 9.45 | | |
| | 2-Wire Voice Unbundled 1-Way Outgoing PBX Hotel/Hospital Discount Room Calling Port | | | UEPFP | UEPXO | 2.18 | 225.00 | 225.00 | | | | | 40.18 | 9.45 | | |
| | 2-Wire Voice Unbundled 1-Way Outgoing PBX Measured Port | | | UEPFP | UEPXS | 2.18 | 225.00 | 225.00 | | | | | 40.18 | 9.45 | | |
| LOCAL NUMBER PORTABILITY | | | | | | | | | | | | | | | | |
| | Local Number Portability (1 per port) | | | UEPFP | LNPCP | 3.15 | 0.00 | 0.00 | | | | | 40.18 | 9.45 | | |
| INTEROFFICE TRANSPORT | | | | | | | | | | | | | | | | |
| | Interoffice Transport - Dedicated - 2 Wire Voice Grade - Facility Termination | | | UEPFP | U1TV2 | 18.00 | 140.00 | 71.00 | | | | | | | | |

| UNBUNDLED NETWORK ELEMENTS - North Carolina | | | | | | | | | | | | | | Attachment: 2 | | Exhibit: A | |
|---|---|---|---|---|---|---|---|---|---|---|---|---|---|---|---|---|---|
| CATEGORY | | RATE ELEMENTS | Interim | Zone | BCS | USOC | RATES ($) | | | | | Svc Order Submitted Elec per LSR | Svc Order Submitted Manually per LSR | Incremental Charge - Manual Svc Order vs. Electronic-1st | Incremental Charge - Manual Svc Order vs. Electronic-Add'l | Incremental Charge - Manual Svc Order vs. Electronic-Disc 1st | Incremental Charge - Manual Svc Order vs. Electronic-Disc Add'l |
| | | | | | | | Rec | Nonrecurring | | Nonrecurring Disconnect | | OSS Rates ($) | | | | | |
| | | | | | | | | First | Add'l | First | Add'l | SOMEC | SOMAN | SOMAN | SOMAN | SOMAN | SOMAN |
| | | Interoffice Transport - Dedicated - 2 Wire Voice Grade - Per Mile or Fraction Mile | | | UEPFP | 1L5XX | 0.0125 | | | | | | | | | | |
| | FEATURES | | | | | | | | | | | | | | | | |
| | | All Features Offered | | | UEPFP | UEPVF | 3.40 | 0.00 | 0.00 | | | | | 40.18 | 9.45 | | |
| | NONRECURRING CHARGES (NRCs) - CURRENTLY COMBINED | | | | | | | | | | | | | | | | |
| | | 2-Wire Loop / Dedicated IO Transport / 2 Wire Line Port Combination - Conversion - Switch-as-is | | | UEPFP | USAC2 | | 9.03 | 1.87 | | | | | 40.18 | 9.45 | | |
| | | 2-Wire Loop / Dedicated IO Transport / 2 Wire Line Port Combination - Conversion - Switch with change | | | UEPFP | USACC | | 9.03 | 1.87 | | | | | 40.18 | 9.45 | | |
| | | Unbundled Miscellaneous Rate Element, Tag Designed Loop at End User Premise | | | UEPFP | URETN | | 11.20 | 1.10 | | | | | 26.94 | 12.76 | 0.00 | 0.00 |
| UNBUNDLED PORT/LOOP COMBINATIONS - COST BASED RATES | | | | | | | | | | | | | | | | | |
| | 2-WIRE VOICE GRADE LOOP- BUS ONLY - WITH 2-WIRE DID TRUNK PORT | | | | | | | | | | | | | | | | |
| | UNE Port/Loop Combination Rates | | | | | | | | | | | | | | | | |
| | | 2-Wire VG Loop/2-Wire DID Trunk Port Combo - UNE Zone 1 | | 1 | | | 20.97 | | | | | | | | | | |
| | | 2-Wire VG Loop/2-Wire DID Trunk Port Combo - UNE Zone 2 | | 2 | | | 27.80 | | | | | | | | | | |
| | | 2-Wire VG Loop/2-Wire DID Trunk Port Combo - UNE Zone 3 | | 3 | | | 37.08 | | | | | | | | | | |
| | UNE Loop Rates | | | | | | | | | | | | | | | | |
| | | 2-Wire Analog Voice Grade Loop - (SL2) - UNE Zone 1 | | 1 | UEPPX | UECD1 | 8.85 | | | | | | | | | | |
| | | 2-Wire Analog Voice Grade Loop - (SL2) - UNE Zone 2 | | 2 | UEPPX | UECD1 | 15.68 | | | | | | | | | | |
| | | 2-Wire Analog Voice Grade Loop - (SL2) - UNE Zone 3 | | 3 | UEPPX | UECD1 | 24.96 | | | | | | | | | | |
| | UNE Port Rate | | | | | | | | | | | | | | | | |
| | | Exchange Ports - 2-Wire DID Port | | | UEPPX | UEPD1 | 12.12 | 224.81 | 188.40 | | | | | 40.18 | 9.45 | | |
| | NONRECURRING CHARGES - CURRENTLY COMBINED | | | | | | | | | | | | | | | | |
| | | 2-Wire Voice Grade Loop / 2-Wire DID Trunk Port Combination - Switch-as-is | | | UEPPX | USAC1 | | 13.26 | 8.39 | | | | | 53.89 | 11.34 | | |
| | | 2-Wire Voice Grade Loop / 2-Wire DID Trunk Port Conversion with BellSouth Allowable Changes | | | UEPPX | USA1C | | 13.26 | 8.39 | | | | | 53.89 | 11.34 | | |
| | ADDITIONAL NRCs | | | | | | | | | | | | | | | | |
| | | 2-Wire DID Subsequent Activity - Add Trunks, Per Trunk | | | UEPPX | USAS1 | | 53.49 | | | | | | 40.18 | 9.45 | | |
| | | Unbundled Miscellaneous Rate Element, Tag Designed Loop at End User Premise | | | UEPPX | URETN | | 11.20 | 1.10 | | | | | 26.94 | 12.76 | 0.00 | 0.00 |
| | Telephone Number/Trunk Group Establisment Charges | | | | | | | | | | | | | | | | |
| | | DID Trunk Termination (One Per Port) | | | UEPPX | NDT | 0.00 | 0.00 | 0.00 | | | | | | | | |
| | | DID Numbers, Establish Trunk Group and Provide First Group of 20 DID Numbers | | | UEPPX | NDZ | 0.00 | 0.00 | 0.00 | | | | | | | | |
| | | Additional DID Numbers for each Group of 20 DID Numbers | | | UEPPX | ND4 | 0.00 | 0.00 | 0.00 | | | | | | | | |
| | | DID Numbers, Non- consecutive DID Numbers , Per Number | | | UEPPX | ND5 | 0.00 | 0.00 | 0.00 | | | | | | | | |
| | | Reserve Non-Consecutive DID numbers | | | UEPPX | ND6 | 0.00 | 0.00 | 0.00 | | | | | | | | |
| | | Reserve DID Numbers | | | UEPPX | NDV | 0.00 | 0.00 | 0.00 | | | | | | | | |
| | LOCAL NUMBER PORTABILITY | | | | | | | | | | | | | | | | |
| | | Local Number Portability (1 per port) | | | UEPPX | LNPCP | 3.15 | 0.00 | 0.00 | | | | | | | | |
| | 2-WIRE ISDN DIGITAL GRADE LOOP WITH 2-WIRE ISDN DIGITAL LINE SIDE PORT | | | | | | | | | | | | | | | | |
| | UNE Port/Loop Combination Rates | | | | | | | | | | | | | | | | |
| | | 2W ISDN Digital Grade Loop/2W ISDN Digital Line Side Port - UNE Zone 1 | | 1 | UEPPB | UEPPR | 38.84 | | | | | | | | | | |
| | | 2W ISDN Digital Grade Loop/2W ISDN Digital Line Side Port - UNE Zone 2 | | 2 | UEPPB | UEPPR | 50.01 | | | | | | | | | | |
| | | 2W ISDN Digital Grade Loop/2W ISDN Digital Line Side Port - UNE Zone 3 | | 3 | UEPPB | UEPPR | 65.18 | | | | | | | | | | |
| | UNE Loop Rates | | | | | | | | | | | | | | | | |
| | | 2-Wire ISDN Digital Grade Loop - UNE Zone 1 | | 1 | UEPPB | UEPPR USL2X | 14.47 | | | | | | | | | | |
| | | 2-Wire ISDN Digital Grade Loop - UNE Zone 2 | | 2 | UEPPB | UEPPR USL2X | 25.64 | | | | | | | | | | |
| | | 2-Wire ISDN Digital Grade Loop - UNE Zone 3 | | 3 | UEPPB | UEPPR USL2X | 40.81 | | | | | | | | | | |
| | UNE Port Rate | | | | | | | | | | | | | | | | |
| | | Exchange Port - 2-Wire ISDN Line Side Port | | | UEPPB | UEPPR UEPPB | 24.37 | 388.20 | 302.77 | | | | | 19.99 | 19.99 | | |
| | NONRECURRING CHARGES - CURRENTLY COMBINED | | | | | | | | | | | | | | | | |

| UNBUNDLED NETWORK ELEMENTS - North Carolina | | | | | | | | | | | | | Attachment: 2 | | Exhibit: A | |
|---|---|---|---|---|---|---|---|---|---|---|---|---|---|---|---|---|
| CATEGORY | RATE ELEMENTS | Interim | Zone | BCS | USOC | RATES ($) | | | | | Svc Order Submitted Elec per LSR | Svc Order Submitted Manually per LSR | Incremental Charge - Manual Svc Order vs. Electronic-1st | Incremental Charge - Manual Svc Order vs. Electronic-Add'l | Incremental Charge - Manual Svc Order vs. Electronic-Disc 1st | Incremental Charge - Manual Svc Order vs. Electronic-Disc Add'l |
| | | | | | | Rec | Nonrecurring | | Nonrecurring Disconnect | | OSS Rates ($) | | | | | |
| | | | | | | | First | Add'l | First | Add'l | SOMEC | SOMAN | SOMAN | SOMAN | SOMAN | SOMAN |
| | 2-Wire ISDN Digital Grade Loop / 2-Wire ISDN Line Side Port Combination - Conversion | | | UEPPB UEPPR | USACB | 0.00 | 174.35 | 174.35 | | | | | | | | |
| | **ADDITIONAL NRCs** | | | | | | | | | | | | | | | |
| | Unbundled Miscellaneous Rate Element, Tag Designed Loop at End User Premise | | | UEPPB UEPPR | URETN | | 11.20 | 1.10 | | | | | | | | |
| | Unbundled Miscellaneous Rate Element, Tag Loop at End User Premise | | | UEPPB UEPPR | URETL | | 8.33 | 0.83 | | | | | 26.94 | 12.76 | 0.00 | 0.00 |
| | **LOCAL NUMBER PORTABILITY** | | | | | | | | | | | | | | | |
| | Local Number Portability (1 per port) | | | UEPPB UEPPR | LNPCX | 0.35 | 0.00 | 0.00 | | | | | | | | |
| | **B-CHANNEL USER PROFILE ACCESS:** | | | | | | | | | | | | | | | |
| | CVS/CSD (DMS/5ESS) | | | UEPPB UEPPR | U1UCA | 0.00 | 0.00 | 0.00 | | | | | | | | |
| | CVS (EWSD) | | | UEPPB UEPPR | U1UCB | 0.00 | 0.00 | 0.00 | | | | | | | | |
| | CSD | | | UEPPB UEPPR | U1UCC | 0.00 | 0.00 | 0.00 | | | | | | | | |
| | **B-CHANNEL AREA PLUS USER PROFILE ACCESS: (AL,KY,LA,MS SC,MS, & TN)** | | | | | | | | | | | | | | | |
| | **USER TERMINAL PROFILE** | | | | | | | | | | | | | | | |
| | User Terminal Profile (EWSD only) | | | UEPPB UEPPR | U1UMA | 0.00 | 0.00 | 0.00 | | | | | | | | |
| | **VERTICAL FEATURES** | | | | | | | | | | | | | | | |
| | All Vertical Features - One per Channel B User Profile | | | UEPPB UEPPR | UEPVF | 3.40 | 0.00 | 0.00 | | | | | | | | |
| | **INTEROFFICE CHANNEL MILEAGE** | | | | | | | | | | | | | | | |
| | Interoffice Channel mileage each, including first mile and facilities termination | | | UEPPB UEPPR | M1GNC | 18.0282 | 137.48 | 52.58 | | | | | 19.99 | 19.99 | | |
| | Interoffice Channel mileage each, additional mile | | | UEPPB UEPPR | M1GNM | 0.0282 | 0.00 | 0.00 | | | | | | | | |
| | **4-WIRE DS1 DIGITAL LOOP WITH 4-WIRE ISDN DS1 DIGITAL TRUNK PORT** | | | | | | | | | | | | | | | |
| | **The UNE-P DS1 combination rates below for in this rate exhibit apply to the embedded base in place as of 10/2/03 until 4/1/04. After 4/1/04 these rates shall revert to tariff rates or a separate commercial agreement.** | | | | | | | | | | | | | | | |
| | **Requests for 4-Wire DS1 Digital Loop with 4-Wire ISDN DS1 Digital Trunk Port after the effective date of this amendment shall be provided pursuant to a separate agreement or tariff at BellSouth's discretion.** | | | | | | | | | | | | | | | |
| | **UNE Port/Loop Combination Rates** | | | | | | | | | | | | | | | |
| | 4W DS1 Digital Loop/4W ISDN DS1 Digital Trunk Port - UNE Zone 1 | | 1 | UEPPP | | 226.55 | | | | | | | | | | |
| | 4W DS1 Digital Loop/4W ISDN DS1 Digital Trunk Port - UNE Zone 2 | | 2 | UEPPP | | 263.28 | | | | | | | | | | |
| | 4W DS1 Digital Loop/4W ISDN DS1 Digital Trunk Port - UNE Zone 3 | | 3 | UEPPP | | 313.15 | | | | | | | | | | |
| | **UNE Loop Rates** | | | | | | | | | | | | | | | |
| | 4-Wire DS1 Digital Loop - UNE Zone 1 | | 1 | UEPPP | USL4P | 47.54 | | | | | | | | | | |
| | 4-Wire DS1 Digital Loop - UNE Zone 2 | | 2 | UEPPP | USL4P | 84.27 | | | | | | | | | | |
| | 4-Wire DS1 Digital Loop - UNE Zone 3 | | 3 | UEPPP | USL4P | 134.14 | | | | | | | | | | |
| | **UNE Port Rate** | | | | | | | | | | | | | | | |
| | Exchange Ports - 4-Wire ISDN DS1 Port (E:4/1/2004) | | | UEPPP | UEPPP | 179.01 | 956.47 | 663.10 | | | | | 19.99 | 19.99 | | |
| | **NONRECURRING CHARGES - CURRENTLY COMBINED** | | | | | | | | | | | | | | | |
| | 4-Wire DS1 Digital Loop / 4-Wire ISDN DS1 Digital Trunk Port Combination - Conversion -Switch-as-is (E:4/1/2004) | | | UEPPP | USACP | 0.00 | 481.51 | 481.51 | | | | | | | | |
| | **ADDITIONAL NRCs** | | | | | | | | | | | | | | | |
| | 4-Wire DS1 Loop / 4-Wire ISDN DS1 Digital Trunk Port - Subsequent Inward/2-Way Tel Nos - (NC Only) | | | UEPPP | PR7TG | | 1.17 | 1.17 | | | | | | | | |
| | 4-Wire DS1 Loop/4-Wire ISDN Digital Trunk Port - Subsequent Activity Outward tel nos. (NC only) | | | UEPPP | PR7TP | | 28.17 | 28.17 | | | | | | | | |
| | 4-Wire DS1 Loop / 4-Wire ISDN DS1 Digital Trk Port - Subsequent Inward Tel Numbers | | | UEPPP | PR7ZT | | 56.33 | 56.33 | | | | | | | | |
| | **LOCAL NUMBER PORTABILITY** | | | | | | | | | | | | | | | |
| | Local Number Portability (1 per port) | | | UEPPP | LNPCN | 1.75 | | | | | | | | | | |
| | **INTERFACE (Provsioning Only)** | | | | | | | | | | | | | | | |
| | Voice/Data | | | UEPPP | PR71V | 0.00 | 0.00 | 0.00 | | | | | | | | |
| | Digital Data | | | UEPPP | PR71D | 0.00 | 0.00 | 0.00 | | | | | | | | |
| | Inward Data | | | UEPPP | PR71E | 0.00 | 0.00 | 0.00 | | | | | | | | |
| | **New or Additional "B" Channel** | | | | | | | | | | | | | | | |
| | New or Additional - Voice/Data B Channel | | | UEPPP | PR7BV | 0.00 | 36.92 | | | | | | 19.99 | 19.99 | | |
| | New or Additional - Digital Data B Channel | | | UEPPP | PR7BF | 0.00 | 36.92 | | | | | | 19.99 | 19.99 | | |
| | New or Additional Inward Data B Channel | | | UEPPP | PR7BD | 0.00 | 36.92 | | | | | | 19.99 | 19.99 | | |
| | **CALL TYPES** | | | | | | | | | | | | | | | |

| UNBUNDLED NETWORK ELEMENTS - North Carolina | | | | | | | | | | | | | | Attachment: 2 | | Exhibit: A | |
|---|---|---|---|---|---|---|---|---|---|---|---|---|---|---|---|---|---|
| CATEGORY | RATE ELEMENTS | Interim | Zone | BCS | USOC | RATES ($) | | | | | Svc Order Submitted Elec per LSR | Svc Order Submitted Manually per LSR | Incremental Charge - Manual Svc Order vs. Electronic-1st | Incremental Charge - Manual Svc Order vs. Electronic-Add'l | Incremental Charge - Manual Svc Order vs. Electronic-Disc 1st | Incremental Charge - Manual Svc Order vs. Electronic-Disc Add'l |
| | | | | | | Rec | Nonrecurring | | Nonrecurring Disconnect | | OSS Rates ($) | | | | | |
| | | | | | | | First | Add'l | First | Add'l | SOMEC | SOMAN | SOMAN | SOMAN | SOMAN | SOMAN |
| | Inward | | | UEPPP | PR7C1 | 0.00 | 0.00 | 0.00 | | | | | | | | |
| | Outward | | | UEPPP | PR7CO | 0.00 | 0.00 | 0.00 | | | | | | | | |
| | Two-way | | | UEPPP | PR7CC | 0.00 | 0.00 | 0.00 | | | | | | | | |
| **Interoffice Channel Mileage** | | | | | | | | | | | | | | | | |
| | Fixed Each Including First Mile | | | UEPPP | 1LN1A | 71.8653 | 217.17 | 163.75 | 0.00 | | | | 19.99 | 19.99 | | |
| | Each Airline-Fractional Additional Mile | | | UEPPP | 1LN1B | 0.5753 | | | | | | | | | | |
| **4-WIRE DS1 DIGITAL LOOP WITH 4-WIRE DDITS TRUNK PORT** | | | | | | | | | | | | | | | | |
| **The UNE-P DS1 combination rates below for in this rate exhibit apply to the embedded base in place as of 10/2/03 until 4/1/04. After 4/1/04 these rates shall revert to tariff rates or a separate commercial agreement.** | | | | | | | | | | | | | | | | |
| **Requests for 4-Wire DS1 Digital Loop with 4-Wire DDITS after the effective date of this amendment shall be provided pursuant to a separate agreement or tariff at BellSouth's discretion.** | | | | | | | | | | | | | | | | |
| **UNE Port/Loop Combination Rates** | | | | | | | | | | | | | | | | |
| | 4W DS1 Digital Loop/4W DDITS Trunk Port - UNE Zone 1 | | 1 | UEPDC | | 171.06 | | | | | | | | | | |
| | 4W DS1 Digital Loop/4W DDITS Trunk Port - UNE Zone 2 | | 2 | UEPDC | | 207.79 | | | | | | | | | | |
| | 4W DS1 Digital Loop/4W DDITS Trunk Port - UNE Zone 3 | | 3 | UEPDC | | 257.66 | | | | | | | | | | |
| **UNE Loop Rates** | | | | | | | | | | | | | | | | |
| | 4-Wire DS1 Digital Loop - UNE Zone 1 | | 1 | UEPDC | USLDC | 47.54 | | | | | | | | | | |
| | 4-Wire DS1 Digital Loop - UNE Zone 2 | | 2 | UEPDC | USLDC | 84.27 | | | | | | | | | | |
| | 4-Wire DS1 Digital Loop - UNE Zone 3 | | 3 | UEPDC | USLDC | 134.14 | | | | | | | | | | |
| **UNE Port Rate** | | | | | | | | | | | | | | | | |
| | 4-Wire DDITS Digital Trunk Port (E:4/1/2004) | | | UEPDC | UDD1T | 123.52 | 831.43 | 491.39 | | | | | 19.99 | 19.99 | | |
| **NONRECURRING CHARGES - CURRENTLY COMBINED** | | | | | | | | | | | | | | | | |
| | 4-Wire DS1 Digital Loop / 4-Wire DDITS Trunk Port Combination - Switch-as-is (E:4/1/2004) | | | UEPDC | USAC4 | | 490.38 | 490.38 | | | | | | | | |
| | 4-Wire DS1 Digital Loop / 4-Wire DDITS Trunk Port Combination - Conversion with DS1 Changes (E:4/1/2004) | | | UEPDC | USAWA | | 490.38 | 490.38 | | | | | | | | |
| | 4-Wire DS1 Digital Loop / 4-Wire DDITS Trunk Port Combination - Conversion with Change - Trunk (E:4/1/2004) | | | UEPDC | USAWB | | 490.38 | 490.38 | | | | | | | | |
| **ADDITIONAL NRCs** | | | | | | | | | | | | | | | | |
| | 4-Wire DS1 Loop / 4-Wire DDITS Trunk Port - Subsequent Service Activity Per Service Order | | | UEPDC | USAS4 | | 127.63 | 127.63 | | | | | | | | |
| | 4-Wire DS1 Loop / 4-Wire DDITS Trunk Port - NRC - Subsequent Channel Activation/Chan - 2-Way Trunk | | | UEPDC | UDTTA | | 28.81 | 28.81 | | | | | | | | |
| | 4-Wire DS1 Loop / 4-Wire DDITS Trunk Port - Subsequent Channel Activation/Chan - 1-Way Outward Trunk | | | UEPDC | UDTTB | | 28.81 | 28.81 | | | | | | | | |
| | 4-Wire DS1 Loop / 4-Wire DDITS Trunk Port - Subsqnt Channel Activation/Chan Inward Trunk w/out DID | | | UEPDC | UDTTC | | 28.81 | 28.81 | | | | | 19.99 | 19.99 | | |
| | 4-Wire DS1 Loop / 4-Wire DDITS Trunk Port - Subsqnt Chan Activation Per Chan - Inward Trunk with DID | | | UEPDC | UDTTD | | 28.81 | 28.81 | | | | | 19.99 | 19.99 | | |
| | 4-Wire DS1 Loop / 4-Wire DDITS Trunk Port - Subsqnt Chan Activation / Chan - 2-Way DID w User Trans | | | UEPDC | UDTTE | | 28.81 | 28.81 | | | | | | | | |
| **BIPOLAR 8 ZERO SUBSTITUTION** | | | | | | | | | | | | | | | | |
| | B8ZS -Superframe Format | | | UEPDC | CCOSF | | 0.00i | 615.00s | | | | | | | | |
| | B8ZS - Extended Superframe Format | | | UEPDC | CCOEF | | 0.00i | 615.00s | | | | | | | | |
| **Alternate Mark Inversion** | | | | | | | | | | | | | | | | |
| | AMI -Superframe Format | | | UEPDC | MCOSF | | 0.00 | 0.00 | | | | | | | | |
| | AMI - Extended SuperFrame Format | | | UEPDC | MCOPO | | 0.00 | 0.00 | | | | | | | | |
| **Telephone Number/Trunk Group Establisment Charges** | | | | | | | | | | | | | | | | |
| | Telephone Number for 2-Way Trunk Group | | | UEPDC | UDTGX | 0.00 | | | | | | | 19.99 | 19.99 | | |
| | Telephone Number for 1-Way Outward Trunk Group | | | UEPDC | UDTGY | 0.00 | | | | | | | 19.99 | 19.99 | | |
| | Telephone Number for 1-Way Inward Trunk Group Without DID | | | UEPDC | UDTGZ | 0.00 | | | | | | | 19.99 | 19.99 | | |
| | DID Numbers, Establish Trunk Group and Provide First Group of 20 DID Numbers | | | UEPDC | NDZ | 0.00 | 0.00 | 0.00 | | | | | | | | |
| | DID Numbers for each Group of 20 DID Numbers | | | UEPDC | ND4 | 0.00 | | | | | | | | | | |
| | DID Numbers, Non- consecutive DID Numbers , Per Number | | | UEPDC | ND5 | 0.00 | | | | | | | | | | |
| | Reserve Non-Consecutive DID Nos. | | | UEPDC | ND6 | 0.00 | 0.00 | 0.00 | | | | | | | | |
| | Reserve DID Numbers | | | UEPDC | NDV | 0.00 | 0.00 | 0.00 | | | | | | | | |
| **Dedicated DS1 (Interoffice Channel Mileage) - FX/FCO for 4-Wire DS1 Digital Loop with 4-Wire DDITS Trunk Port** | | | | | | | | | | | | | | | | |
| | Interoffice Channel Mileage - Fixed rate 0-8 miles (Facilities Termination) | | | UEPDC | 1LNO1 | 71.29 | 217.17 | 163.75 | 0.00 | 0.00 | | | 19.99 | 19.99 | | |

| UNBUNDLED NETWORK ELEMENTS - North Carolina | | | | | | | | | | | | | | Attachment: 2 | | Exhibit: A | |
|---|---|---|---|---|---|---|---|---|---|---|---|---|---|---|---|---|---|
| CATEGORY | | RATE ELEMENTS | Interim | Zone | BCS | USOC | RATES ($) | | | | | Svc Order Submitted Elec per LSR | Svc Order Submitted Manually per LSR | Incremental Charge - Manual Svc Order vs. Electronic- 1st | Incremental Charge - Manual Svc Order vs. Electronic- Add'l | Incremental Charge - Manual Svc Order vs. Electronic- Disc 1st | Incremental Charge - Manual Svc Order vs. Electronic- Disc Add'l |
| | | | | | | | Rec | Nonrecurring | | Nonrecurring Disconnect | | OSS Rates ($) | | | | | |
| | | | | | | | | First | Add'l | First | Add'l | SOMEC | SOMAN | SOMAN | SOMAN | SOMAN | SOMAN |
| | | Interoffice Channel Mileage - Additional rate per mile - 0-8 miles | | | UEPDC | 1LNOA | 0.5753 | 0.00 | 0.00 | | | | | | | | |
| | | Interoffice Channel Mileage - Fixed rate 9-25 miles (Facilities Termination) | | | UEPDC | 1LNO2 | 0.00 | 0.00 | 0.00 | | | | | | | | |
| | | Interoffice Channel Mileage - Additional rate per mile - 9-25 miles | | | UEPDC | 1LNOB | 0.5753 | 0.00 | 0.00 | | | | | | | | |
| | | Interoffice Channel Mileage - Fixed rate 25+ miles (Facilities Termination) | | | UEPDC | 1LNO3 | 0.00 | 0.00 | 0.00 | 0.00 | | | | | | | |
| | | Interoffice Channel Mileage - Additional rate per mile - 25+ miles | | | UEPDC | 1LNOC | 0.5753 | 0.00 | 0.00 | | | | | | | | |
| | | Local Number Portability, per DS0 Activated | | | UEPDC | LNPCP | 3.15 | 0.00 | 0.00 | 0.00 | | | | | | | |
| | | Central Office Termininating Point | | | UEPDC | CTG | 0.00 | | | | | | | | | | |
| | | **4-WIRE DS1 LOOP WITH CHANNELIZATION WITH PORT** | | | | | | | | | | | | | | | |
| | | **System is 1 DS1 Loop, 1 D4 Channel Bank, and up to 24 Feature Activations** | | | | | | | | | | | | | | | |
| | | **Each System can have up to 24 combinations of rates depending on type and number of ports used** | | | | | | | | | | | | | | | |
| | | **The UNE-P DS1 combination rates below for 4-Wire DS1 Loop with Channelization with Port in this rate exhibit apply to the embedded base in place as of 10/2/03 until 4/1/04. After 4/1/04 these rates shall revert to tariff rates or a separate agreement.** | | | | | | | | | | | | | | | |
| | | **Requests for 4-Wire DS1 Loop with Channelization with Port after the effective date of this amendment shall be provided pursuant to a separate agreement or tariff at BellSouth's discretion.** | | | | | | | | | | | | | | | |
| | | **UNE DS1 Loop** | | | | | | | | | | | | | | | |
| | | 4-Wire DS1 Loop - UNE Zone 1 | | 1 | UEPMG | USLDC | 47.54 | 0.00 | 0.00 | | | | | | | | |
| | | 4-Wire DS1 Loop - UNE Zone 2 | | 2 | UEPMG | USLDC | 84.27 | 0.00 | 0.00 | | | | | | | | |
| | | 4-Wire DS1 Loop - UNE Zone 3 | | 3 | UEPMG | USLDC | 134.14 | 0.00 | 0.00 | | | | | | | | |
| | | **UNE DSO Channelization Capacities (D4 Channel Bank Configurations)** | | | | | | | | | | | | | | | |
| | | 24 DSO Channel Capacity - 1 per DS1 | | | UEPMG | VUM24 | 123.06 | 0.00 | 0.00 | | | | | 19.99 | 19.99 | | |
| | | 48 DSO Channel Capacity - 1 per 2 DS1s | | | UEPMG | VUM48 | 246.12 | 0.00 | 0.00 | | | | | 19.99 | 19.99 | | |
| | | 96 DSO Channel Capacity -1per 4 DS1s | | | UEPMG | VUM96 | 492.24 | 0.00 | 0.00 | | | | | 19.99 | 19.99 | | |
| | | 144 DS0 Channel Capacity - 1 per 6 DS1s | | | UEPMG | VUM14 | 738.36 | 0.00 | 0.00 | | | | | 19.99 | 19.99 | | |
| | | 192 DS0 Channel Capacity -1 per 8 DS1s | | | UEPMG | VUM19 | 984.48 | 0.00 | 0.00 | | | | | 19.99 | 19.99 | | |
| | | 240 DS0 Channel Capacity - 1 per 10 DS1s | | | UEPMG | VUM2O | 1,230.60 | 0.00 | 0.00 | | | | | 19.99 | 19.99 | | |
| | | 288 DS0 Channel Capacity - 1 per 12 DS1s | | | UEPMG | VUM28 | 1,476.72 | 0.00 | 0.00 | | | | | 19.99 | 19.99 | | |
| | | 384 DS0 Channel Capacity - 1 per 16 DS1s | | | UEPMG | VUM38 | 1,968.96 | 0.00 | 0.00 | | | | | 19.99 | 19.99 | | |
| | | 480 DS0 Channel Capacity - 1 per 20 DS1s | | | UEPMG | VUM4O | 2,461.20 | 0.00 | 0.00 | | | | | 19.99 | 19.99 | | |
| | | 576 DS0 Channel Capacity -1 per 24 DS1s | | | UEPMG | VUM57 | 2,953.44 | 0.00 | 0.00 | | | | | 19.99 | 19.99 | | |
| | | 672 DS0 Channel Capacity - 1 per 28 DS1s | | | UEPMG | VUM67 | 3,445.68 | 0.00 | 0.00 | | | | | 19.99 | 19.99 | | |
| | | **Non-Recurring Charges (NRC) Associated with 4-Wire DS1 Loop with Channelizton with Port - Conversion Charge Based on a System** | | | | | | | | | | | | | | | |
| | | **A Minimum System configuration is One (1) DS1, One (1) D4 Channel Bank, and Up To 24 DSO Ports with Feature Activations.** | | | | | | | | | | | | | | | |
| | | **Multiples of this configuration functioning as one are considered Add'l after the minimum system configuration is counted.** | | | | | | | | | | | | | | | |
| | | NRC - Conversion (Currently Combined) with or without BellSouth Allowed Changes | | | UEPMG | USAC4 | 0.00 | 330.61 | 16.64 | | | | | 19.99 | 19.99 | | |
| | | **System Additions at End User Locations Where 4-Wire DS1 Loop with Channelization with Port Combination Currently Exists and** | | | | | | | | | | | | | | | |
| | | **New (Not Currently Combined) in all states, except in Density Zone 1 of Top 8 MSA's** | | | | | | | | | | | | | | | |
| | | 1 DS1/D4 Channel Bank - Additionally Add NRC for each Port and Assoc Fea Activation (E:4/1/2004) | | | UEPMG | VUMD4 | 0.00 | 743.74 | 326.22 | 149.02 | 17.68 | | | 19.99 | 19.99 | | |
| | | **Bipolar 8 Zero Substitution** | | | | | | | | | | | | | | | |
| | | Clear Channel Capability Format, superframe - Subsequent Activity Only | | | UEPMG | CCOSF | 0.00 | 0.00i | 615.00s | | | | | | | | |
| | | Clear Channel Capability Format - Extended Superframe - Subsequent Activity Only | | | UEPMG | CCOEF | 0.00 | 0.00i | 615.00s | | | | | | | | |
| | | **Alternate Mark Inversion (AMI)** | | | | | | | | | | | | | | | |
| | | Superframe Format | | | UEPMG | MCOSF | 0.00 | 0.00 | 0.00 | | | | | | | | |
| | | Extended Superframe Format | | | UEPMG | MCOPO | 0.00 | 0.00 | 0.00 | | | | | | | | |
| | | **Exchange Ports Associated with 4-Wire DS1 Loop with Channelization with Port** | | | | | | | | | | | | | | | |
| | | **Exchange Ports** | | | | | | | | | | | | | | | |
| | | Line Side Combination Channelized PBX Trunk Port - Business (E:4/1/2004) | | | UEPPX | UEPCX | 2.28 | 0.00 | 0.00 | 0.00 | 0.00 | | | 40.18 | 9.45 | | |
| | | Line Side Outward Channelized PBX Trunk Port - Business (E:4/1/2004) | | | UEPPX | UEPOX | 2.28 | 0.00 | 0.00 | 0.00 | 0.00 | | | 40.18 | 9.45 | | |
| | | Line Side Inward Only Channelized PBX Trunk Port without DID (E:4/1/2004) | | | UEPPX | UEP1X | 2.28 | 0.00 | 0.00 | 0.00 | 0.00 | | | 40.18 | 9.45 | | |

| UNBUNDLED NETWORK ELEMENTS - North Carolina | | | | | | | | | | | | | | Attachment: 2 | | Exhibit: A | |
|---|---|---|---|---|---|---|---|---|---|---|---|---|---|---|---|---|---|
| CATEGORY | | RATE ELEMENTS | Interim | Zone | BCS | USOC | RATES ($) | | | | | Svc Order Submitted Elec per LSR | Svc Order Submitted Manually per LSR | Incremental Charge - Manual Svc Order vs. Electronic-1st | Incremental Charge - Manual Svc Order vs. Electronic-Add'l | Incremental Charge - Manual Svc Order vs. Electronic-Disc 1st | Incremental Charge - Manual Svc Order vs. Electronic-Disc Add'l |
| | | | | | | | Rec | Nonrecurring | | Nonrecurring Disconnect | | OSS Rates ($) | | | | | |
| | | | | | | | | First | Add'l | First | Add'l | SOMEC | SOMAN | SOMAN | SOMAN | SOMAN | SOMAN |
| | | 2-Wire Trunk Side Unbundled Channelized DID Trunk Port (E:4/1/2004) | | | UEPPX | UEPDM | 13.26 | 0.00 | 0.00 | 0.00 | 0.00 | | | 40.18 | 9.45 | | |
| | **Feature Activations - Unbundled Loop Concentration** | | | | | | | | | | | | | | | | |
| | | Feature (Service) Activation for each Line Port Terminated in D4 Bank | | | UEPPX | 1PQWM | 0.65 | 25.27 | 13.34 | 4.15 | 4.12 | | | 40.18 | 9.45 | | |
| | | Feature (Service) Activation for each Trunk Port Terminated in D4 Bank | | | UEPPX | 1PQWU | 0.65 | 77.75 | 18.33 | 58.74 | 11.48 | | | 40.18 | 9.45 | | |
| | **Telephone Number/ Group Establishment Charges for DID Service** | | | | | | | | | | | | | | | | |
| | | DID Trunk Termination (1 per Port) | | | UEPPX | NDT | 0.00 | 0.00 | 0.00 | | | | | | | | |
| | | Estab Trk Grp and Provide 1st 20 DID Nos. (FL,GA, NC,& SC) | | | UEPPX | NDZ | 0.00 | 0.00 | 0.00 | | | | | | | | |
| | | DID Numbers - groups of 20 - Valid all States | | | UEPPX | ND4 | 0.00 | 0.00 | 0.00 | | | | | | | | |
| | | Non-Consecutive DID Numbers - per number | | | UEPPX | ND5 | 0.00 | 0.00 | 0.00 | | | | | | | | |
| | | Reserve Non-Consecutive DID Numbers | | | UEPPX | ND6 | 0.00 | 0.00 | 0.00 | | | | | | | | |
| | | Reserve DID Numbers | | | UEPPX | NDV | 0.00 | 0.00 | 0.00 | | | | | | | | |
| | **Local Number Portability** | | | | | | | | | | | | | | | | |
| | | Local Number Portability - 1 per port | | | UEPPX | LNPCP | 3.15 | 0.00 | 0.00 | | | | | | | | |
| | **FEATURES - Vertical and Optional** | | | | | | | | | | | | | | | | |
| | **Local Switching Features Offered with Line Side Ports Only** | | | | | | | | | | | | | | | | |
| | | All Features Available | | | UEPPX | UEPVF | 3.40 | 0.00 | 0.00 | | | | | 40.18 | 9.45 | | |
| **UNBUNDLED CENTREX PORT/LOOP COMBINATIONS - COST BASED RATES** | | | | | | | | | | | | | | | | | |
| | **1. Cost Based Rates are applied where BellSouth is required by FCC and/or State Commission rule to provide Unbundled Local Switching or Switch Ports.** | | | | | | | | | | | | | | | | |
| | **2. Features shall apply to the Unbundled Port/Loop Combination - Cost Based Rate section in the same manner as they are applied to the Stand-Alone Unbundled Port section of this Rate Exhibit.** | | | | | | | | | | | | | | | | |
| | **3. End Office and Tandem Switching Usage and Common Transport Usage rates in the Port section of this rate exhibit shall apply to all combinations of loop/port network elements except for UNE Coin Port/Loop Combinations.** | | | | | | | | | | | | | | | | |
| | **4. The first and additional Port nonrecurring charges apply to Not Currently Combined Combos. For Currently Combined Combos, the nonrecurring charges shall be those identified in the Nonrecurring - Currently Combined sections. Additional NRCs may apply also and are categorized accordingly.** | | | | | | | | | | | | | | | | |
| | **5. Market Rates for Unbundled Centrex Port/Loop Combination will be negotiated on an Individual Case Basis, until further notice.** | | | | | | | | | | | | | | | | |
| | **UNE-P CENTREX - 5ESS (Valid in All States)** | | | | | | | | | | | | | | | | |
| | **2-Wire VG Loop/2-Wire Voice Grade Port (Centrex) Combo** | | | | | | | | | | | | | | | | |
| | **UNE Port/Loop Combination Rates (Non-Design)** | | | | | | | | | | | | | | | | |
| | | 2-Wire VG Loop/2-Wire Voice Grade Port (Centrex) Port Combo - Non-Design | | 1 | UEP95 | | 13.03 | | | | | | | | | | |
| | | 2-Wire VG Loop/2-Wire Voice Grade Port (Centrex)Port Combo - Non-Design | | 2 | UEP95 | | 21.33 | | | | | | | | | | |
| | | 2-Wire VG Loop/2-Wire Voice Grade Port (Centrex)Port Combo - Non-Design | | 3 | UEP95 | | 32.61 | | | | | | | | | | |
| | **UNE Port/Loop Combination Rates (Design)** | | | | | | | | | | | | | | | | |
| | | 2-Wire VG Loop/2-Wire Voice Grade Port (Centrex) Port Combo - Design | | 1 | UEP95 | | 17.25 | | | | | | | | | | |
| | | 2-Wire VG Loop/2-Wire Voice Grade Port (Centrex)Port Combo - Design | | 2 | UEP95 | | 28.21 | | | | | | | | | | |
| | | 2-Wire VG Loop/2-Wire Voice Grade Port (Centrex)Port Combo - Design | | 3 | UEP95 | | 43.09 | | | | | | | | | | |
| | **UNE Loop Rate** | | | | | | | | | | | | | | | | |
| | | 2-Wire Voice Grade Loop (SL 1) - Zone 1 | | 1 | UEP95 | UECS1 | 10.75 | | | | | | | | | | |
| | | 2-Wire Voice Grade Loop (SL 1) - Zone 2 | | 2 | UEP95 | UECS1 | 19.05 | | | | | | | | | | |
| | | 2-Wire Voice Grade Loop (SL 1) - Zone 3 | | 3 | UEP95 | UECS1 | 30.33 | | | | | | | | | | |
| | | 2-Wire Voice Grade Loop (SL 2) - Zone 1 | | 1 | UEP95 | UECS2 | 14.97 | | | | | | | | | | |
| | | 2-Wire Voice Grade Loop (SL 2) - Zone 2 | | 2 | UEP95 | UECS2 | 25.93 | | | | | | | | | | |
| | | 2-Wire Voice Grade Loop (SL 2) - Zone 3 | | 3 | UEP95 | UECS2 | 40.81 | | | | | | | | | | |
| | **UNE Port Rate** | | | | | | | | | | | | | | | | |
| | **All States** | | | | | | | | | | | | | | | | |
| | | 2-Wire Voice Grade Port (Centrex ) Basic Local Area | | | UEP95 | UEPYA | 2.28 | 79.59 | 63.97 | | | | | 40.18 | 9.45 | | |
| | | 2-Wire Voice Grade Port (Centrex 800 termination) | | | UEP95 | UEPYB | 2.28 | 79.59 | 63.97 | | | | | 40.18 | 9.45 | | |
| | | 2-Wire Voice Grade Port (Centrex with Caller ID)1Basic Local Area | | | UEP95 | UEPYH | 2.28 | 79.59 | 63.97 | | | | | 40.18 | 9.45 | | |
| | | 2-Wire Voice Grade Port (Centrex from diff Serving Wire Center)2,3 Basic Local Area | | | UEP95 | UEPYM | 2.28 | 164.57 | 128.16 | | | | | 40.18 | 9.45 | | |
| | | 2-Wire Voice Grade Port, Diff Serving Wire Center 2,3 - 800 Service Term - Basic Local Area | | | UEP95 | UEPYZ | 2.28 | | | | | | | 40.18 | 9.45 | | |

| UNBUNDLED NETWORK ELEMENTS - North Carolina | | | | | | | | | | | | | | Attachment: 2 | | Exhibit: A | |
|---|---|---|---|---|---|---|---|---|---|---|---|---|---|---|---|---|---|
| CATEGORY | RATE ELEMENTS | Interim | Zone | BCS | USOC | RATES ($) | | | | | Svc Order Submitted Elec per LSR | Svc Order Submitted Manually per LSR | Incremental Charge - Manual Svc Order vs. Electronic-1st | Incremental Charge - Manual Svc Order vs. Electronic-Add'l | Incremental Charge - Manual Svc Order vs. Electronic-Disc 1st | Incremental Charge - Manual Svc Order vs. Electronic-Disc Add'l |
| | | | | | | Rec | Nonrecurring | | Nonrecurring Disconnect | | OSS Rates ($) | | | | | |
| | | | | | | | First | Add'l | First | Add'l | SOMEC | SOMAN | SOMAN | SOMAN | SOMAN | SOMAN |
| | 2-Wire Voice Grade Port terminated in on Megalink or equivalent - Basic Local Area | | | UEP95 | UEPY9 | 2.28 | 79.59 | 63.97 | | | | | 40.18 | 9.45 | | |
| | 2-Wire Voice Grade Port Terminated on 800 Service Term - Basic Local Area | | | UEP95 | UEPY2 | 2.28 | 79.59 | 63.97 | | | | | 40.18 | 9.45 | | |
| **NC Only** | | | | | | | | | | | | | | | | |
| | 2-Wire Voice Grade Port (Centrex ) | | | UEP95 | UEPUA | 2.28 | 79.59 | 63.97 | | | | | 40.18 | 9.45 | | |
| | 2-Wire Voice Grade Port (Centrex 800 termination) | | | UEP95 | UEPUB | 2.28 | 79.59 | 63.97 | | | | | 40.18 | 9.45 | | |
| | 2-Wire Voice Grade Port (Centrex with Caller ID)1 | | | UEP95 | UEPUH | 2.28 | 79.59 | 63.97 | | | | | 40.18 | 9.45 | | |
| | 2-Wire Voice Grade Port (Centrex from diff Serving Wire Center)2,3 | | | UEP95 | UEPUM | 2.28 | 164.57 | 128.16 | | | | | 40.18 | 9.45 | | |
| | 2-Wire Voice Grade Port, Diff Serving Wire Center - 800 Service Term 2,3 | | | UEP95 | UEPUZ | 2.28 | 164.57 | 128.16 | | | | | 40.18 | 9.45 | | |
| | 2-Wire Voice Grade Port terminated in on Megalink or equivalent | | | UEP95 | UEPU9 | 2.28 | 79.59 | 63.97 | | | | | 40.18 | 9.45 | | |
| | 2-Wire Voice Grade Port Terminated on 800 Service Term | | | UEP95 | UEPU2 | 2.28 | 79.59 | 63.97 | | | | | 40.18 | 9.45 | | |
| **Local Switching** | | | | | | | | | | | | | | | | |
| | Centrex Intercom Funtionality, per port | | | UEP95 | URECS | 0.903 | | | | | | | | | | |
| **Local Number Portability** | | | | | | | | | | | | | | | | |
| | Local Number Portability (1 per port) | | | UEP95 | LNPCC | 0.35 | | | | | | | | | | |
| **Features** | | | | | | | | | | | | | | | | |
| | All Standard Features Offered, per port | | | UEP95 | UEPVF | 3.40 | | | | | | | | | | |
| | All Select Features Offered, per port | | | UEP95 | UEPVS | 0.00 | 457.83 | | | | | | | | | |
| | All Centrex Control Features Offered, per port | | | UEP95 | UEPVC | 3.40 | | | | | | | | | | |
| **NARS** | | | | | | | | | | | | | | | | |
| | Unbundled Network Access Register - Combination | | | UEP95 | UARCX | 0.00 | 0.00 | 0.00 | 0.00 | 0.00 | | 0.00 | 40.18 | 9.45 | | |
| | Unbundled Network Access Register - Indial | | | UEP95 | UAR1X | 0.00 | 0.00 | 0.00 | 0.00 | 0.00 | | 0.00 | 40.18 | 9.45 | | |
| | Unbundled Network Access Register - Outdial | | | UEP95 | UAROX | 0.00 | 0.00 | 0.00 | 0.00 | 0.00 | | 0.00 | 40.18 | 9.45 | | |
| **Miscellaneous Terminations** | | | | | | | | | | | | | | | | |
| **2-Wire Trunk Side** | | | | | | | | | | | | | | | | |
| | Trunk Side Terminations, each | | | UEP95 | CEND6 | 12.36 | | | | | | | | | | |
| **4-Wire Digital (1.544 Megabits)** | | | | | | | | | | | | | | | | |
| | DS1 Circuit Terminations, each | | | UEP95 | M1HD1 | 123.65 | | | | | | | 40.18 | 9.45 | | |
| | DS0 Channels Activated, each | | | UEP95 | M1HDO | 0.00 | 28.81 | | | | | | 40.18 | 9.45 | | |
| **Interoffice Channel Mileage - 2-Wire** | | | | | | | | | | | | | | | | |
| | Interoffice Channel Facilities Termination | | | UEP95 | M1GBC | 18.00 | | | | | | | | | | |
| | Interoffice Channel mileage, per mile or fraction of mile | | | UEP95 | M1GBM | 0.0282 | | | | | | | | | | |
| **Feature Activations (DS0) Centrex Loops on Channelized DS1 Service** | | | | | | | | | | | | | | | | |
| **D4 Channel Bank Feature Activations** | | | | | | | | | | | | | | | | |
| | Feature Activation on D-4 Channel Bank Centrex Loop Slot | | | UEP95 | 1PQWS | 0.65 | | | | | | | | | | |
| | Feature Activation on D-4 Channel Bank FX line Side Loop Slot | | | UEP95 | 1PQW6 | 0.65 | | | | | | | | | | |
| | Feature Activation on D-4 Channel Bank FX Trunk Side Loop Slot | | | UEP95 | 1PQW7 | 0.65 | | | | | | | | | | |
| | Feature Activation on D-4 Channel Bank Centrex Loop Slot - Different Wire Center | | | UEP95 | 1PQWP | 0.65 | | | | | | | | | | |
| | Feature Activation on D-4 Channel Bank Private Line Loop Slot | | | UEP95 | 1PQWV | 0.65 | | | | | | | | | | |
| | Feature Activation on D-4 Channel Bank Tjie Line/Trunk Loop Slot | | | UEP95 | 1PQWQ | 0.65 | | | | | | | | | | |
| | Feature Activation on D-4 Channel Bank WATS Loop Slot | | | UEP95 | 1PQWA | 0.65 | | | | | | | | | | |
| **Non-Recurring Charges (NRC) Associated with UNE-P Centrex** | | | | | | | | | | | | | | | | |
| | NRC Conversion Currently Combined Switch-As-Is with allowed changes, per port | | | UEP95 | USAC2 | | 2.77 | 0.40 | | | | | 40.18 | 9.45 | | |
| | New Centrex Standard Common Block | | | UEP95 | M1ACS | 0.00 | 695.11 | | | | | | 40.18 | 9.45 | | |
| | New Centrex Customized Common Block | | | UEP95 | M1ACC | 0.00 | 695.11 | | | | | | 40.18 | 9.45 | | |
| | NAR Establishment Charge, Per Occasion | | | UEP95 | URECA | 0.00 | 72.73 | | | | | | 40.18 | 9.45 | | |
| **Additional Non-Recurring Charges (NRC)** | | | | | | | | | | | | | | | | |
| | Unbundled Miscellaneous Rate Element, Tag Loop at End Use Premise | | | UEP95 | URETL | | 8.33 | 0.83 | | | | | | | | |

| UNBUNDLED NETWORK ELEMENTS - North Carolina | | | | | | | | | | | | | | Attachment: 2 | | Exhibit: A | |
|---|---|---|---|---|---|---|---|---|---|---|---|---|---|---|---|---|---|
| CATEGORY | | RATE ELEMENTS | Interim | Zone | BCS | USOC | RATES ($) | | | | | Svc Order Submitted Elec per LSR | Svc Order Submitted Manually per LSR | Incremental Charge - Manual Svc Order vs. Electronic-1st | Incremental Charge - Manual Svc Order vs. Electronic-Add'l | Incremental Charge - Manual Svc Order vs. Electronic-Disc 1st | Incremental Charge - Manual Svc Order vs. Electronic-Disc Add'l |
| | | | | | | | Rec | Nonrecurring | | Nonrecurring Disconnect | | | | OSS Rates ($) | | | |
| | | | | | | | | First | Add'l | First | Add'l | SOMEC | SOMAN | SOMAN | SOMAN | SOMAN | SOMAN |
| | | Unbundled Miscellaneous Rate Element, Tag Design Loop at End Use Premise | | | UEP95 | URETN | | 11.20 | 1.10 | | | | | | | | |
| | **UNE-P CENTREX - DMS100 (Valid in All States)** | | | | | | | | | | | | | | | | |
| | **2-Wire VG Loop/2-Wire Voice Grade Port (Centrex) Combo** | | | | | | | | | | | | | | | | |
| | **UNE Port/Loop Combination Rates (Non-Design)** | | | | | | | | | | | | | | | | |
| | | 2-Wire VG Loop/2-Wire Voice Grade Port (Centrex) Port Combo - Non-Design | | 1 | UEP9D | | 13.03 | | | | | | | | | | |
| | | 2-Wire VG Loop/2-Wire Voice Grade Port (Centrex)Port Combo - Non-Design | | 2 | UEP9D | | 21.33 | | | | | | | | | | |
| | | 2-Wire VG Loop/2-Wire Voice Grade Port (Centrex)Port Combo - Non-Design | | 3 | UEP9D | | 32.61 | | | | | | | | | | |
| | **UNE Port/Loop Combination Rates (Design)** | | | | | | | | | | | | | | | | |
| | | 2-Wire VG Loop/2-Wire Voice Grade Port (Centrex) Port Combo - Design | | 1 | UEP9D | | 17.25 | | | | | | | | | | |
| | | 2-Wire VG Loop/2-Wire Voice Grade Port (Centrex)Port Combo - Design | | 2 | UEP9D | | 28.21 | | | | | | | | | | |
| | | 2-Wire VG Loop/2-Wire Voice Grade Port (Centrex)Port Combo - Design | | 3 | UEP9D | | 43.09 | | | | | | | | | | |
| | **UNE Loop Rate** | | | | | | | | | | | | | | | | |
| | | 2-Wire Voice Grade Loop (SL 1) - Zone 1 | | 1 | UEP9D | UECS1 | 10.75 | | | | | | | | | | |
| | | 2-Wire Voice Grade Loop (SL 1) - Zone 2 | | 2 | UEP9D | UECS1 | 19.05 | | | | | | | | | | |
| | | 2-Wire Voice Grade Loop (SL 1) - Zone 3 | | 3 | UEP9D | UECS1 | 30.33 | | | | | | | | | | |
| | | 2-Wire Voice Grade Loop (SL 2) - Zone 1 | | 1 | UEP9D | UECS2 | 14.97 | | | | | | | | | | |
| | | 2-Wire Voice Grade Loop (SL 2) - Zone 2 | | 2 | UEP9D | UECS2 | 25.93 | | | | | | | | | | |
| | | 2-Wire Voice Grade Loop (SL 2) - Zone 3 | | 3 | UEP9D | UECS2 | 40.81 | | | | | | | | | | |
| | **UNE Port Rate** | | | | | | | | | | | | | | | | |
| | **ALL STATES** | | | | | | | | | | | | | | | | |
| | | 2-Wire Voice Grade Port (Centrex ) Basic Local Area | | | UEP9D | UEPYA | 2.28 | 79.59 | 63.97 | | | | | 40.18 | 9.45 | | |
| | | 2-Wire Voice Grade Port (Centrex 800 termination)Basic Local Area | | | UEP9D | UEPYB | 2.28 | 79.59 | 63.97 | | | | | 40.18 | 9.45 | | |
| | | 2-Wire Voice Grade Port (Centrex / EBS-PSET)3Basic Local Area | | | UEP9D | UEPYC | 2.28 | 79.59 | 63.97 | | | | | 40.18 | 9.45 | | |
| | | 2-Wire Voice Grade Port (Centrex / EBS-M5009)3Basic Local Area | | | UEP9D | UEPYD | 2.28 | 79.59 | 63.97 | | | | | 40.18 | 9.45 | | |
| | | 2-Wire Voice Grade Port (Centrex / EBS-M5209))3 Basic Local Area | | | UEP9D | UEPYE | 2.28 | 79.59 | 63.97 | | | | | 40.18 | 9.45 | | |
| | | 2-Wire Voice Grade Port (Centrex / EBS-M5112))3 Basic Local Area | | | UEP9D | UEPYF | 2.28 | 79.59 | 63.97 | | | | | 40.18 | 9.45 | | |
| | | 2-Wire Voice Grade Port (Centrex / EBS-M5312))3Basic Local Area | | | UEP9D | UEPYG | 2.28 | 79.59 | 63.97 | | | | | 40.18 | 9.45 | | |
| | | 2-Wire Voice Grade Port (Centrex / EBS-M5008))3 Basic Local Area | | | UEP9D | UEPYT | 2.28 | 79.59 | 63.97 | | | | | 40.18 | 9.45 | | |
| | | 2-Wire Voice Grade Port (Centrex / EBS-M5208))3 Basic Local Area | | | UEP9D | UEPYU | 2.28 | 79.59 | 63.97 | | | | | 40.18 | 9.45 | | |
| | | 2-Wire Voice Grade Port (Centrex / EBS-M5216))3 Basic Local Area | | | UEP9D | UEPYV | 2.28 | 79.59 | 63.97 | | | | | 40.18 | 9.45 | | |
| | | 2-Wire Voice Grade Port (Centrex / EBS-M5316))3 Basic Local Area | | | UEP9D | UEPY3 | 2.28 | 79.59 | 63.97 | | | | | 40.18 | 9.45 | | |
| | | 2-Wire Voice Grade Port (Centrex with Caller ID) Basic Local Area | | | UEP9D | UEPYH | 2.28 | 79.59 | 63.97 | | | | | 40.18 | 9.45 | | |
| | | 2-Wire Voice Grade Port (Centrex/Caller ID/Msg Wtg Lamp Indication))4 Basic Local Area | | | UEP9D | UEPYW | 2.28 | 79.59 | 63.97 | | | | | 40.18 | 9.45 | | |
| | | 2-Wire Voice Grade Port (Centrex/Msg Wtg Lamp Indication))4 Basic Local Area | | | UEP9D | UEPYJ | 2.28 | 79.59 | 63.97 | | | | | 40.18 | 9.45 | | |
| | | 2-Wire Voice Grade Port (Centrex from diff Serving Wire Center) 2,3-Basic Local Area | | | UEP9D | UEPYM | 2.28 | 164.57 | 128.16 | | | | | 40.18 | 9.45 | | |
| | | 2-Wire Voice Grade Port (Centrex/differ SWC /EBS-PSET)2,3,4 Basic Local Area | | | UEP9D | UEPYO | 2.28 | 164.57 | 128.16 | | | | | 40.18 | 9.45 | | |

| UNBUNDLED NETWORK ELEMENTS - North Carolina | | | | | | | | | | | | | | Attachment: 2 | | Exhibit: A | |
|---|---|---|---|---|---|---|---|---|---|---|---|---|---|---|---|---|---|
| CATEGORY | | RATE ELEMENTS | Interim | Zone | BCS | USOC | RATES ($) | | | | | Svc Order Submitted Elec per LSR | Svc Order Submitted Manually per LSR | Incremental Charge - Manual Svc Order vs. Electronic-1st | Incremental Charge - Manual Svc Order vs. Electronic-Add'l | Incremental Charge - Manual Svc Order vs. Electronic-Disc 1st | Incremental Charge - Manual Svc Order vs. Electronic-Disc Add'l |
| | | | | | | | Rec | Nonrecurring | | Nonrecurring Disconnect | | OSS Rates ($) | | | | | |
| | | | | | | | | First | Add'l | First | Add'l | SOMEC | SOMAN | SOMAN | SOMAN | SOMAN | SOMAN |
| | | 2-Wire Voice Grade Port (Centrex/differ SWC /EBS-M5009)2,3,4 Basic Local Area | | | UEP9D | UEPYP | 2.28 | 164.57 | 128.16 | | | | | 40.18 | 9.45 | | |
| | | 2-Wire Voice Grade Port (Centrex/differ SWC /EBS-5209)2,3,4 Basic Local Area | | | UEP9D | UEPYQ | 2.28 | 164.57 | 128.16 | | | | | 40.18 | 9.45 | | |
| | | 2-Wire Voice Grade Port (Centrex/differ SWC /EBS-M5112)2,3,4 Basic Local Area | | | UEP9D | UEPYR | 2.28 | 164.57 | 128.16 | | | | | 40.18 | 9.45 | | |
| | | 2-Wire Voice Grade Port (Centrex/differ SWC /EBS-M5312)2,3,4 Basic Local Area | | | UEP9D | UEPYS | 2.28 | 164.57 | 128.16 | | | | | 40.18 | 9.45 | | |
| | | 2-Wire Voice Grade Port (Centrex/differ SWC /EBS-M5008)2,3,4 Basic Local Area | | | UEP9D | UEPY4 | 2.28 | 164.57 | 128.16 | | | | | 40.18 | 9.45 | | |
| | | 2-Wire Voice Grade Port (Centrex/differ SWC /EBS-M5208)2, 3 Basic Local Area | | | UEP9D | UEPY5 | 2.28 | 164.57 | 128.16 | | | | | 40.18 | 9.45 | | |
| | | 2-Wire Voice Grade Port (Centrex/differ SWC /EBS-M5216)2,3,4 Basic Local Area | | | UEP9D | UEPY6 | 2.28 | 164.57 | 128.16 | | | | | 40.18 | 9.45 | | |
| | | 2-Wire Voice Grade Port (Centrex/differ SWC /EBS-M5316)2,3,4 Basic Local Area | | | UEP9D | UEPY7 | 2.28 | 164.57 | 128.16 | | | | | 40.18 | 9.45 | | |
| | | 2-Wire Voice Grade Port, Diff Serving Wire Center - 800 Service Term 2,3 | | | UEP9D | UEPYZ | 2.28 | 164.57 | 128.16 | | | | | 40.18 | 9.45 | | |
| | | 2-Wire Voice Grade Port terminated in on Megalink or equivalent Basic Local Area | | | UEP9D | UEPY9 | 2.28 | 79.59 | 63.97 | | | | | 40.18 | 9.45 | | |
| | | 2-Wire Voice Grade Port Terminated on 800 Service Term Basic Local Area | | | UEP9D | UEPY2 | 2.28 | 79.59 | 63.97 | | | | | 40.18 | 9.45 | | |
| | NC Only | | | | | | | | | | | | | | | | |
| | | 2-Wire Voice Grade Port (Centrex) | | | UEP9D | UEPUA | 2.28 | 79.59 | 63.97 | | | | | 40.18 | 9.45 | | |
| | | 2-Wire Voice Grade Port (Centrex 800 termination) | | | UEP9D | UEPUB | 2.28 | 79.59 | 63.97 | | | | | 40.18 | 9.45 | | |
| | | 2-Wire Voice Grade Port (Centrex / EBS-PSET)4 | | | UEP9D | UEPUC | 2.28 | 79.59 | 63.97 | | | | | 40.18 | 9.45 | | |
| | | 2-Wire Voice Grade Port (Centrex / EBS-M5009)4 | | | UEP9D | UEPUD | 2.28 | 79.59 | 63.97 | | | | | 40.18 | 9.45 | | |
| | | 2-Wire Voice Grade Port (Centrex / EBS-M5209)4 | | | UEP9D | UEPUE | 2.28 | 79.59 | 63.97 | | | | | 40.18 | 9.45 | | |
| | | 2-Wire Voice Grade Port (Centrex / EBS-M5112)4 | | | UEP9D | UEPUF | 2.28 | 79.59 | 63.97 | | | | | 40.18 | 9.45 | | |
| | | 2-Wire Voice Grade Port (Centrex / EBS-M5312)4 | | | UEP9D | UEPUG | 2.28 | 79.59 | 63.97 | | | | | 40.18 | 9.45 | | |
| | | 2-Wire Voice Grade Port (Centrex / EBS-M5008)4 | | | UEP9D | UEPUT | 2.28 | 79.59 | 63.97 | | | | | 40.18 | 9.45 | | |
| | | 2-Wire Voice Grade Port (Centrex / EBS-M5208)4 | | | UEP9D | UEPUU | 2.28 | 79.59 | 63.97 | | | | | 40.18 | 9.45 | | |
| | | 2-Wire Voice Grade Port (Centrex / EBS-M5216)4 | | | UEP9D | UEPUV | 2.28 | 79.59 | 63.97 | | | | | 40.18 | 9.45 | | |
| | | 2-Wire Voice Grade Port (Centrex / EBS-M5316)4 | | | UEP9D | UEPU3 | 2.28 | 79.59 | 63.97 | | | | | 40.18 | 9.45 | | |
| | | 2-Wire Voice Grade Port (Centrex with Caller ID) | | | UEP9D | UEPUH | 2.28 | 79.59 | 63.97 | | | | | 40.18 | 9.45 | | |
| | | 2-Wire Voice Grade Port (Centrex/Caller ID/Msg Wtg Lamp Indication)4 | | | UEP9D | UEPUW | 2.28 | 79.59 | 63.97 | | | | | 40.18 | 9.45 | | |
| | | 2-Wire Voice Grade Port (Centrex/Msg Wtg Lamp Indication)4 | | | UEP9D | UEPUJ | 2.28 | 79.59 | 63.97 | | | | | 40.18 | 9.45 | | |
| | | 2-Wire Voice Grade Port (Centrex from diff Serving Wire Center) 2,3 | | | UEP9D | UEPUM | 2.28 | 164.57 | 128.16 | | | | | 40.18 | 9.45 | | |
| | | 2-Wire Voice Grade Port (Centrex/differ SWC /EBS-PSET)2,3,4 | | | UEP9D | UEPUO | 2.28 | 164.57 | 128.16 | | | | | 40.18 | 9.45 | | |
| | | 2-Wire Voice Grade Port (Centrex/differ SWC /EBS-M5009)2,3,4 | | | UEP9D | UEPUP | 2.28 | 164.57 | 128.16 | | | | | 40.18 | 9.45 | | |
| | | 2-Wire Voice Grade Port (Centrex/differ SWC /EBS-5209)2,3,4 | | | UEP9D | UEPUQ | 2.28 | 164.57 | 128.16 | | | | | 40.18 | 9.45 | | |
| | | 2-Wire Voice Grade Port (Centrex/differ SWC /EBS-M5112)2,3,4 | | | UEP9D | UEPUR | 2.28 | 164.57 | 128.16 | | | | | 40.18 | 9.45 | | |
| | | 2-Wire Voice Grade Port (Centrex/differ SWC /EBS-M5312)2,3,4 | | | UEP9D | UEPUS | 2.28 | 164.57 | 128.16 | | | | | 40.18 | 9.45 | | |
| | | 2-Wire Voice Grade Port (Centrex/differ SWC /EBS-M5008)2,3,4 | | | UEP9D | UEPU4 | 2.28 | 164.57 | 128.16 | | | | | 40.18 | 9.45 | | |
| | | 2-Wire Voice Grade Port (Centrex/differ SWC /EBS-M5208)2,3,4 | | | UEP9D | UEPU5 | 2.28 | 164.57 | 128.16 | | | | | 40.18 | 9.45 | | |
| | | 2-Wire Voice Grade Port (Centrex/differ SWC /EBS-M5216)2,3,4 | | | UEP9D | UEPU6 | 2.28 | 164.57 | 128.16 | | | | | 40.18 | 9.45 | | |
| | | 2-Wire Voice Grade Port (Centrex/differ SWC /EBS-M5316)2,3,4 | | | UEP9D | UEPU7 | 2.28 | 164.57 | 128.16 | | | | | 40.18 | 9.45 | | |

| UNBUNDLED NETWORK ELEMENTS - North Carolina | | | | | | | | | | | | | | Attachment: 2 | | Exhibit: A | |
|---|---|---|---|---|---|---|---|---|---|---|---|---|---|---|---|---|---|
| CATEGORY | RATE ELEMENTS | Interim | Zone | BCS | USOC | RATES ($) | | | | | Svc Order Submitted Elec per LSR | Svc Order Submitted Manually per LSR | Incremental Charge - Manual Svc Order vs. Electronic-1st | Incremental Charge - Manual Svc Order vs. Electronic-Add'l | Incremental Charge - Manual Svc Order vs. Electronic-Disc 1st | Incremental Charge - Manual Svc Order vs. Electronic-Disc Add'l |
| | | | | | | Rec | Nonrecurring | | Nonrecurring Disconnect | | OSS Rates ($) | | | | | |
| | | | | | | | First | Add'l | First | Add'l | SOMEC | SOMAN | SOMAN | SOMAN | SOMAN | SOMAN |
| | 2-Wire Voice Grade Port, Diff Serving Wire Center - 800 Service Term 2,3 | | | UEP9D | UEPUZ | 2.28 | 164.57 | 128.16 | | | | | 40.18 | 9.45 | | |
| | 2-Wire Voice Grade Port terminated in on Megalink or equivalent | | | UEP9D | UEPU9 | 2.28 | 79.59 | 63.97 | | | | | 40.18 | 9.45 | | |
| | 2-Wire Voice Grade Port Terminated on 800 Service Term | | | UEP9D | UEPU2 | 2.28 | 79.59 | 63.97 | | | | | 40.18 | 9.45 | | |
| **Local Switching** | | | | | | | | | | | | | | | | |
| | Centrex Intercom Funtionality, per port | | | UEP9D | URECS | 0.903 | | | | | | | | | | |
| **Local Number Portability** | | | | | | | | | | | | | | | | |
| | Local Number Portability (1 per port) | | | UEP9D | LNPCC | 0.35 | | | | | | | | | | |
| **Features** | | | | | | | | | | | | | | | | |
| | All Standard Features Offered, per port | | | UEP9D | UEPVF | 3.40 | | | | | | | | | | |
| | All Select Features Offered, per port | | | UEP9D | UEPVS | 0.00 | 457.83 | | | | | | 40.18 | 9.45 | | |
| | All Centrex Control Features Offered, per port | | | UEP9D | UEPVC | 3.40 | | | | | | | | | | |
| **NARS** | | | | | | | | | | | | | | | | |
| | Unbundled Network Access Register - Combination | | | UEP9D | UARCX | 0.00 | 0.00 | 0.00 | 0.00 | 0.00 | | 0.00 | 40.18 | 9.45 | | |
| | Unbundled Network Access Register - Inward | | | UEP9D | UAR1X | 0.00 | 0.00 | 0.00 | 0.00 | 0.00 | | 0.00 | 40.18 | 9.45 | | |
| | Unbundled Network Access Register - Outdial | | | UEP9D | UAROX | 0.00 | 0.00 | 0.00 | 0.00 | 0.00 | | 0.00 | 40.18 | 9.45 | | |
| **Miscellaneous Terminations** | | | | | | | | | | | | | | | | |
| **2-Wire Trunk Side** | | | | | | | | | | | | | | | | |
| | Trunk Side Terminations, each | | | UEP9D | CEND6 | 12.36 | | | | | | | | | | |
| **4-Wire Digital (1.544 Megabits)** | | | | | | | | | | | | | | | | |
| | DS1 Circuit Terminations, each | | | UEP9D | M1HD1 | 123.65 | | | | | | | 40.18 | 9.45 | | |
| | DS0 Channels Activiated per Channel | | | UEP9D | M1HDO | 0.00 | 28.81 | | | | | | 40.18 | 9.45 | | |
| **Interoffice Channel Mileage - 2-Wire** | | | | | | | | | | | | | | | | |
| | Interoffice Channel Facilities Termination | | | UEP9D | M1GBC | 18.00 | | | | | | | | | | |
| | Interoffice Channel mileage, per mile or fraction of mile | | | UEP9D | M1GBM | 0.0282 | | | | | | | | | | |
| **Feature Activations (DS0) Centrex Loops on Channelized DS1 Service** | | | | | | | | | | | | | | | | |
| **D4 Channel Bank Feature Activations** | | | | | | | | | | | | | | | | |
| | Feature Activation on D-4 Channel Bank Centrex Loop Slot | | | UEP9D | 1PQWS | 0.65 | | | | | | | | | | |
| | Feature Activation on D-4 Channel Bank FX line Side Loop Slot | | | UEP9D | 1PQW6 | 0.65 | | | | | | | | | | |
| | Feature Activation on D-4 Channel Bank FX Trunk Side Loop Slot | | | UEP9D | 1PQW7 | 0.65 | | | | | | | | | | |
| | Feature Activation on D-4 Channel Bank Centrex Loop Slot - Different Wire Center | | | UEP9D | 1PQWP | 0.65 | | | | | | | | | | |
| | Feature Activation on D-4 Channel Bank Private Line Loop Slot | | | UEP9D | 1PQWV | 0.65 | | | | | | | | | | |
| | Feature Activation on D-4 Channel Bank Tjie Line/Trunk Loop Slot | | | UEP9D | 1PQWQ | 0.65 | | | | | | | | | | |
| | Feature Activation on D-4 Channel Bank WATS Loop Slot | | | UEP9D | 1PQWA | 0.65 | | | | | | | | | | |
| **Non-Recurring Charges (NRC) Associated with UNE-P Centrex** | | | | | | | | | | | | | | | | |
| | NRC Conversion Currently Combined Switch-As-Is with allowed changes, per port | | | UEP9D | USAC2 | | 2.77 | 0.40 | | | | | 40.18 | 9.45 | | |
| | New Centrex Standard Common Block | | | UEP9D | M1ACS | 0.00 | 695.11 | | | | | | 40.18 | 9.45 | | |
| | New Centrex Customized Common Block | | | UEP9D | M1ACC | 0.00 | 695.11 | | | | | | 40.18 | 9.45 | | |
| | NAR Establishment Charge, Per Occasion | | | UEP9D | URECA | 0.00 | 72.73 | | | | | | 40.18 | 9.45 | | |
| **Additional Non-Recurring Charges (NRC)** | | | | | | | | | | | | | | | | |
| | Unbundled Miscellaneous Rate Element, Tag Loop at End Use Premise | | | UEP9D | URETL | | 8.33 | 0.83 | | | | | | | | |
| | Unbundled Miscellaneous Rate Element, Tag Design Loop at End Use Premise | | | UEP9D | URETN | | 11.20 | 1.10 | | | | | | | | |
| **Note 1 - Required Port for Centrex Control in 1AESS, 5ESS & EWSD** | | | | | | | | | | | | | | | | |
| **Note 2 - Requres Interoffice Channel Mileage** | | | | | | | | | | | | | | | | |
| **Note 3 - Installation is combination of Installation charge for SL2 Loop and Port** | | | | | | | | | | | | | | | | |
| **Note 4 - Requires Specific Customer Premises Equipment** | | | | | | | | | | | | | | | | |
| **Note: Rates displaying an "R" in Interim column are interim and subject to rate true-up as set forth in General Terms and Conditions.** | | | | | | | | | | | | | | | | |

| UNBUNDLED NETWORK ELEMENTS - South Carolina | | | | | | | | | | | | | | Attachment: 2 | | Exhibit: A | |
|---|---|---|---|---|---|---|---|---|---|---|---|---|---|---|---|---|---|
| CATEGORY | RATE ELEMENTS | Interim | Zone | BCS | USOC | RATES ($) | | | | | Svc Order Submitted Elec per LSR | Svc Order Submitted Manually per LSR | Incremental Charge - Manual Svc Order vs. Electronic- 1st | Incremental Charge - Manual Svc Order vs. Electronic- Add'l | Incremental Charge - Manual Svc Order vs. Electronic- Disc 1st | Incremental Charge - Manual Svc Order vs. Electronic- Disc Add'l |
| | | | | | | Rec | Nonrecurring | | Nonrecurring Disconnect | | OSS Rates ($) | | | | | |
| | | | | | | | First | Add'l | First | Add'l | SOMEC | SOMAN | SOMAN | SOMAN | SOMAN | SOMAN |
| | The "Zone" shown in the sections for stand-alone loops or loops as part of a combination refers to Geographically Deaveraged UNE Zones. To view Geographically Deaveraged UNE Zone Designations by Central Office, refer to Internet Website: http://www.interconnection.bellsouth.com/become_a_clec/html/interconnection.htm | | | | | | | | | | | | | | | |
| OPERATIONAL SUPPORT SYSTEMS (OSS) - "REGIONAL RATES" | | | | | | | | | | | | | | | | | |
| | NOTE: (1) CLEC should contact its contract negotiator if it prefers the "state specific" OSS charges as ordered by the State Commissions. The OSS charges currently contained in this rate exhibit are the BellSouth "regional" service ordering charges. CLEC may elect either the state specific Commission ordered rates for the service ordering charges, or CLEC may elect the regional service ordering charge, however, CLEC can not obtain a mixture of the two regardless if CLEC has a interconnection contract established in each of the 9 states. | | | | | | | | | | | | | | | |
| | NOTE: (2) Any element that can be ordered electronically will be billed according to the SOMEC rate listed in this category. Please refer to BellSouth's Local Ordering Handbook (LOH) to determine if a product can be ordered electronically. For those elements that cannot be ordered electronically at present per the LOH, the listed SOMEC rate in this category reflects the charge that would be billed to a CLEC once electronic ordering capabilities come on-line for that element. Otherwise, the manual ordering charge, SOMAN, will be applied to a CLECs bill when it submits an LSR to BellSouth. | | | | | | | | | | | | | | | |
| | OSS - Electronic Service Order Charge, Per Local Service Request (LSR) - UNE Only | | | | SOMEC | | 3.50 | 0.00 | 3.50 | 0.00 | | | | | | |
| | OSS - Manual Service Order Charge, Per Local Service Request (LSR) - UNE Only | | | | SOMAN | | 15.69 | 0.00 | 1.97 | 0.00 | | | | | | |
| UNE SERVICE DATE ADVANCEMENT CHARGE | | | | | | | | | | | | | | | | | |
| | NOTE: The Expedite charge will be maintained commensurate with BellSouth's FCC No.1 Tariff, Section 5 as applicable. | | | | | | | | | | | | | | | |
| | UNE Expedite Charge per Circuit or Line Assignable USOC, per Day | | | UAL, UEANL, UCL, UEF, UDF, UEQ, UDL, UENTW, UDN, UEA, UHL, ULC, USL, U1T12, U1T48, U1TD1, U1TD3, U1TDX, U1TO3, U1TS1, U1TVX, UC1BC, UC1BL, UC1CC, UC1CL, UC1DC, UC1DL, UC1EC, UC1EL, UC1FC, UC1FL, UC1GC, UC1GL, UC1HC, UC1HL, UDL12, UDL48, UDLO3, UDLSX, UE3, ULD12, ULD48, ULDD1, ULDD3, ULDDX, ULDO3, ULDS1, ULDVX, UNC1X, UNC3X, UNCDX, UNCNX, UNCSX, UNCVX, UNLD1, UNLD3, UXTD1, UXTD3, UXTS1, U1TUC, U1TUD, U1TUB, U1TUA | SDASP | | 200.00 | | | | | | | | | |
| UNBUNDLED EXCHANGE ACCESS LOOP | | | | | | | | | | | | | | | | | |
| | 2-WIRE ANALOG VOICE GRADE LOOP | | | | | | | | | | | | | | | | |
| | 2-Wire Analog Voice Grade Loop - Service Level 1- Zone 1 | | 1 | UEANL | UEAL2 | 14.94 | 37.92 | 17.62 | 23.56 | 5.32 | | | | | | |
| | 2-Wire Analog Voice Grade Loop - Service Level 1- Zone 2 | | 2 | UEANL | UEAL2 | 21.39 | 37.92 | 17.62 | 23.56 | 5.32 | | | | | | |
| | 2-Wire Analog Voice Grade Loop - Service Level 1- Zone 3 | | 3 | UEANL | UEAL2 | 26.72 | 37.92 | 17.62 | 23.56 | 5.32 | | | | | | |
| | 2-Wire Analog Voice Grade Loop - Service Level 1- Zone 1 | | 1 | UEANL | UEASL | 14.94 | 37.92 | 17.62 | 23.56 | 5.32 | | | | | | |
| | 2-Wire Analog Voice Grade Loop - Service Level 1- Zone 2 | | 2 | UEANL | UEASL | 21.39 | 37.92 | 17.62 | 23.56 | 5.32 | | | | | | |
| | 2-Wire Analog Voice Grade Loop - Service Level 1- Zone 3 | | 3 | UEANL | UEASL | 26.72 | 37.92 | 17.62 | 23.56 | 5.32 | | | | | | |
| | Unbundled Miscellaneous Rate Element, Tag Loop at End User Premise | | | UEANL | URETL | | 8.33 | 0.83 | | | | | | | | |
| | Loop Testing - Basic 1st Half Hour | | | UEANL | URET1 | | 34.23 | 34.23 | | | | | | | | |
| | Loop Testing - Basic Additional Half Hour | | | UEANL | URETA | | 19.90 | 19.90 | | | | | | | | |

| UNBUNDLED NETWORK ELEMENTS - South Carolina | | | | | | | | | | | | | | Attachment: 2 | | Exhibit: A | |
|---|---|---|---|---|---|---|---|---|---|---|---|---|---|---|---|---|---|
| CATEGORY | | RATE ELEMENTS | Interim | Zone | BCS | USOC | RATES ($) | | | | | Svc Order Submitted Elec per LSR | Svc Order Submitted Manually per LSR | Incremental Charge - Manual Svc Order vs. Electronic-1st | Incremental Charge - Manual Svc Order vs. Electronic-Add'l | Incremental Charge - Manual Svc Order vs. Electronic-Disc 1st | Incremental Charge - Manual Svc Order vs. Electronic-Disc Add'l |
| | | | | | | | Rec | Nonrecurring | | Nonrecurring Disconnect | | OSS Rates ($) | | | | | |
| | | | | | | | | First | Add'l | First | Add'l | SOMEC | SOMAN | SOMAN | SOMAN | SOMAN | SOMAN |
| | | CLEC to CLEC Conversion Charge Without Outside Dispatch (UVL-SL1) | | | UEANL | UREWO | | 15.81 | 8.96 | | | | | | | | |
| | | Unbundled Voice Loop, Non-Design Voice Loop, billing for BST providing make-up (Engineering Information - E.I. ) | | | UEANL | UEANM | | 13.47 | 13.47 | | | | | | | | |
| | | Manual Order Coordination for UVL-SL1s (per loop) | | | UEANL | UEAMC | | 8.17 | 8.17 | | | | | | | | |
| | | Order Coordination for Specified Conversion Time for UVL-SL1 (per LSR) | | | UEANL | OCOSL | | 18.13 | 18.13 | | | | | | | | |
| | 2-WIRE Unbundled COPPER LOOP | | | | | | | | | | | | | | | | |
| | | 2-Wire Unbundled Copper Loop - Non-Designed Zone 1 | | 1 | UEQ | UEQ2X | 12.94 | 36.40 | 16.10 | 22.66 | 4.42 | | | | | | |
| | | 2 Wire Unbundled Copper Loop - Non-Designed - Zone 2 | | 2 | UEQ | UEQ2X | 14.51 | 36.40 | 16.10 | 22.66 | 4.42 | | | | | | |
| | | 2 Wire Unbundled Copper Loop - Non-Designed - Zone 3 | | 3 | UEQ | UEQ2X | 15.02 | 36.40 | 16.10 | 22.66 | 4.42 | | | | | | |
| | | Unbundled Miscellaneous Rate Element, Tag Loop at End User Premise | | | UEQ | URETL | | 8.33 | 0.83 | | | | | | | | |
| | | Manual Order Coordination 2 Wire Unbundled Copper Loop - Non-Designed (per loop) | | | UEQ | USBMC | | 8.17 | 8.17 | | | | | | | | |
| | | Unbundled Copper Loop, Non-Design Copper Loop, billing for BST providing make-up (Engineering Information - E.I.) | | | UEQ | UEQMU | | 13.47 | 13.47 | | | | | | | | |
| | | Loop Testing - Basic 1st Half Hour | | | UEQ | URET1 | | 34.23 | 34.23 | | | | | | | | |
| | | Loop Testing - Basic Additional Half Hour | | | UEQ | URETA | | 19.90 | 19.90 | | | | | | | | |
| | | CLEC to CLEC Conversion Charge Without Outside Dispatch (UCL-ND) | | | UEQ | UREWO | | 14.30 | 7.45 | | | | | | | | |
| UNBUNDLED EXCHANGE ACCESS LOOP | | | | | | | | | | | | | | | | | |
| | 2-WIRE ANALOG VOICE GRADE LOOP | | | | | | | | | | | | | | | | |
| | | 2 Wire Analog Voice Grade Loop-Service Level 1-Line Splitting-Zone 1 | | 1 | UEPSR UEPSB | UEALS | 14.94 | 37.92 | 17.62 | 23.56 | 5.32 | | | | | | |
| | | 2 Wire Analog Voice Grade Loop-Service Level 1-Line Splitting-Zone 1 | | 1 | UEPSR UEPSB | UEABS | 14.94 | 37.92 | 17.62 | 23.56 | 5.32 | | | | | | |
| | | 2 Wire Analog Voice Grade Loop- Service Level 1-Line Splitting-Zone 2 | | 2 | UEPSR UEPSB | UEALS | 21.39 | 37.92 | 17.62 | 23.56 | 5.32 | | | | | | |
| | | 2 Wire Analog Voice Grade Loop- Service Level 1-Line Splitting-Zone 2 | | 2 | UEPSR UEPSB | UEABS | 21.39 | 37.92 | 17.62 | 23.56 | 5.32 | | | | | | |
| | | 2 Wire Analog Voice Grade Loop-Service Level 1-Line Splitting-Zone 3 | | 3 | UEPSR UEPSB | UEALS | 26.72 | 37.92 | 17.62 | 23.56 | 5.32 | | | | | | |
| | | 2 Wire Analog Voice Grade Loop-Service Level 1-Line Splitting-Zone 3 | | 3 | UEPSR UEPSB | UEABS | 26.72 | 37.92 | 17.62 | 23.56 | 5.32 | | | | | | |
| UNBUNDLED EXCHANGE ACCESS LOOP | | | | | | | | | | | | | | | | | |
| | 2-WIRE ANALOG VOICE GRADE LOOP | | | | | | | | | | | | | | | | |
| | | 2-Wire Analog Voice Grade Loop - Service Level 2 w/Loop or Ground Start Signaling - Zone 1 | | 1 | UEA | UEAL2 | 16.68 | 105.98 | 68.43 | 53.05 | 10.61 | | | | | | |
| | | 2-Wire Analog Voice Grade Loop - Service Level 2 w/Loop or Ground Start Signaling - Zone 2 | | 2 | UEA | UEAL2 | 23.13 | 105.98 | 68.43 | 53.05 | 10.61 | | | | | | |
| | | 2-Wire Analog Voice Grade Loop - Service Level 2 w/Loop or Ground Start Signaling - Zone 3 | | 3 | UEA | UEAL2 | 28.46 | 105.98 | 68.43 | 53.05 | 10.61 | | | | | | |
| | | Order Coordination for Specified Conversion Time (per LSR) | | | UEA | OCOSL | | 18.13 | | | | | | | | | |
| | | 2-Wire Analog Voice Grade Loop - Service Level 2 w/Reverse Battery Signaling - Zone 1 | | 1 | UEA | UEAR2 | 16.68 | 105.98 | 68.43 | 53.05 | 10.61 | | | | | | |
| | | 2-Wire Analog Voice Grade Loop - Service Level 2 w/Reverse Battery Signaling - Zone 2 | | 2 | UEA | UEAR2 | 23.13 | 105.98 | 68.43 | 53.05 | 10.61 | | | | | | |
| | | 2-Wire Analog Voice Grade Loop - Service Level 2 w/Reverse Battery Signaling - Zone 3 | | 3 | UEA | UEAR2 | 28.46 | 105.98 | 68.43 | 53.05 | 10.61 | | | | | | |
| | | Order Coordination for Specified Conversion Time (per LSR) | | | UEA | OCOSL | | 18.13 | | | | | | | | | |
| | | CLEC to CLEC Conversion Charge without outside dispatch | | | UEA | UREWO | | 87.90 | 36.44 | | | | | | | | |
| | | Loop Tagging - Service Level 2 (SL2) | | | UEA | URETL | | 11.24 | 1.10 | | | | | | | | |
| | 4-WIRE ANALOG VOICE GRADE LOOP | | | | | | | | | | | | | | | | |
| | | 4-Wire Analog Voice Grade Loop - Zone 1 | | 1 | UEA | UEAL4 | 32.59 | 132.38 | 94.83 | 59.35 | 14.61 | | | | | | |
| | | 4-Wire Analog Voice Grade Loop - Zone 2 | | 2 | UEA | UEAL4 | 43.89 | 132.38 | 94.83 | 59.35 | 14.61 | | | | | | |
| | | 4-Wire Analog Voice Grade Loop - Zone 3 | | 3 | UEA | UEAL4 | 43.38 | 132.38 | 94.83 | 59.35 | 14.61 | | | | | | |
| | | Order Coordination for Specified Conversion Time (per LSR) | | | UEA | OCOSL | | 18.13 | | | | | | | | | |
| | | CLEC to CLEC Conversion Charge without outside dispatch | | | UEA | UREWO | | 87.90 | 36.44 | | | | | | | | |

| UNBUNDLED NETWORK ELEMENTS - South Carolina | | | | | | | | | | | | | | Attachment: 2 | | Exhibit: A | |
|---|---|---|---|---|---|---|---|---|---|---|---|---|---|---|---|---|---|
| CATEGORY | RATE ELEMENTS | Interim | Zone | BCS | USOC | RATES ($) | | | | | Svc Order Submitted Elec per LSR | Svc Order Submitted Manually per LSR | Incremental Charge - Manual Svc Order vs. Electronic-1st | Incremental Charge - Manual Svc Order vs. Electronic-Add'l | Incremental Charge - Manual Svc Order vs. Electronic-Disc 1st | Incremental Charge - Manual Svc Order vs. Electronic-Disc Add'l |
| | | | | | | Rec | Nonrecurring | | Nonrecurring Disconnect | | OSS Rates ($) | | | | | |
| | | | | | | | First | Add'l | First | Add'l | SOMEC | SOMAN | SOMAN | SOMAN | SOMAN | SOMAN |
| 2-WIRE ISDN DIGITAL GRADE LOOP | | | | | | | | | | | | | | | | |
| | 2-Wire ISDN Digital Grade Loop - Zone 1 | | 1 | UDN | U1L2X | 25.21 | 117.58 | 80.03 | 53.05 | 10.61 | | | | | | |
| | 2-Wire ISDN Digital Grade Loop - Zone 2 | | 2 | UDN | U1L2X | 32.76 | 117.58 | 80.03 | 53.05 | 10.61 | | | | | | |
| | 2-Wire ISDN Digital Grade Loop - Zone 3 | | 3 | UDN | U1L2X | 37.70 | 117.58 | 80.03 | 53.05 | 10.61 | | | | | | |
| | Order Coordination For Specified Conversion Time (per LSR) | | | UDN | OCOSL | | 18.13 | | | | | | | | | |
| | CLEC to CLEC Conversion Charge without outside dispatch | | | UDN | UREWO | | 91.82 | 44.25 | | | | | | | | |
| 2-WIRE ASYMMETRICAL DIGITAL SUBSCRIBER LINE (ADSL) COMPATIBLE LOOP | | | | | | | | | | | | | | | | |
| | 2 Wire Unbundled ADSL Loop including manual service inquiry & facility reservation - Zone 1 | | 1 | UAL | UAL2X | 12.19 | 120.84 | 70.56 | 50.37 | 7.93 | | | | | | |
| | 2 Wire Unbundled ADSL Loop including manual service inquiry & facility reservation - Zone 2 | | 2 | UAL | UAL2X | 13.71 | 120.84 | 70.56 | 50.37 | 7.93 | | | | | | |
| | 2 Wire Unbundled ADSL Loop including manual service inquiry & facility reservation - Zone 3 | | 3 | UAL | UAL2X | 14.14 | 120.84 | 70.56 | 50.37 | 7.93 | | | | | | |
| | Order Coordination for Specified Conversion Time (per LSR) | | | UAL | OCOSL | | 18.13 | | | | | | | | | |
| | 2 Wire Unbundled ADSL Loop without manual service inquiry & facility reservaton - Zone 1 | | 1 | UAL | UAL2W | 12.19 | 95.81 | 57.82 | 50.37 | 7.93 | | | | | | |
| | 2 Wire Unbundled ADSL Loop without manual service inquiry & facility reservaton - Zone 2 | | 2 | UAL | UAL2W | 13.71 | 95.81 | 57.82 | 50.37 | 7.93 | | | | | | |
| | 2 Wire Unbundled ADSL Loop without manual service inquiry & facility reservaton - Zone 3 | | 3 | UAL | UAL2W | 14.14 | 95.81 | 57.82 | 50.37 | 7.93 | | | | | | |
| | Order Coordination for Specified Conversion Time (per LSR) | | | UAL | OCOSL | | 18.13 | | | | | | | | | |
| | CLEC to CLEC Conversion Charge without outside dispatch | | | UAL | UREWO | | 86.38 | 40.48 | | | | | | | | |
| 2-WIRE HIGH BIT RATE DIGITAL SUBSCRIBER LINE (HDSL) COMPATIBLE LOOP | | | | | | | | | | | | | | | | |
| | 2 Wire Unbundled HDSL Loop including manual service inquiry & facility reservation - Zone 1 | | 1 | UHL | UHL2X | 9.58 | 129.52 | 79.24 | 50.37 | 7.93 | | | | | | |
| | 2 Wire Unbundled HDSL Loop including manual service inquiry & facility reservation - Zone 2 | | 2 | UHL | UHL2X | 10.92 | 129.52 | 79.24 | 50.37 | 7.93 | | | | | | |
| | 2 Wire Unbundled HDSL Loop including manual service inquiry & facility reservation - Zone 3 | | 3 | UHL | UHL2X | 11.40 | 129.52 | 79.24 | 50.37 | 7.93 | | | | | | |
| | Order Coordination for Specified Conversion Time (per LSR) | | | UHL | OCOSL | | 18.13 | | | | | | | | | |
| | 2 Wire Unbundled HDSL Loop without manual service inquiry and facility reservation - Zone 1 | | 1 | UHL | UHL2W | 9.58 | 104.49 | 66.50 | 50.37 | 7.93 | | | | | | |
| | 2 Wire Unbundled HDSL Loop without manual service inquiry and facility reservation - Zone 2 | | 2 | UHL | UHL2W | 10.92 | 104.49 | 66.50 | 50.37 | 7.93 | | | | | | |
| | 2 Wire Unbundled HDSL Loop without manual service inquiry and facility reservation - Zone 3 | | 3 | UHL | UHL2W | 11.40 | 104.49 | 66.50 | 50.37 | 7.93 | | | | | | |
| | Order Coordination for Specified Conversion Time (per LSR) | | | UHL | OCOSL | | 18.13 | | | | | | | | | |
| | CLEC to CLEC Conversion Charge without outside dispatch | | | UHL | UREWO | | 86.32 | 40.48 | | | | | | | | |
| 4-WIRE HIGH BIT RATE DIGITAL SUBSCRIBER LINE (HDSL) COMPATIBLE LOOP | | | | | | | | | | | | | | | | |
| | 4 Wire Unbundled HDSL Loop including manual service inquiry and facility reservation - Zone 1 | | 1 | UHL | UHL4X | 16.02 | 158.18 | 107.89 | 55.12 | 10.38 | | | | | | |
| | 4-Wire Unbundled HDSL Loop including manual service inquiry and facility reservation - Zone 2 | | 2 | UHL | UHL4X | 14.33 | 158.18 | 107.89 | 55.12 | 10.38 | | | | | | |
| | 4-Wire Unbundled HDSL Loop including manual service inquiry and facility reservation - Zone 3 | | 3 | UHL | UHL4X | 16.84 | 158.18 | 107.89 | 55.12 | 10.38 | | | | | | |
| | Order Coordination for Specified Conversion Time (per LSR) | | | UHL | OCOSL | | 18.13 | | | | | | | | | |
| | 4-Wire Unbundled HDSL Loop without manual service inquiry and facility reservation - Zone 1 | | 1 | UHL | UHL4W | 16.02 | 133.14 | 95.16 | 55.12 | 10.38 | | | | | | |
| | 4-Wire Unbundled HDSL Loop without manual service inquiry and facility reservation - Zone 2 | | 2 | UHL | UHL4W | 14.33 | 133.14 | 95.16 | 55.12 | 10.38 | | | | | | |
| | 4-Wire Unbundled HDSL Loop without manual service inquiry and facility reservation - Zone 3 | | 3 | UHL | UHL4W | 16.84 | 133.14 | 95.16 | 55.12 | 10.38 | | | | | | |
| | Order Coordination for Specified Conversion Time (per LSR) | | | UHL | OCOSL | | 18.13 | | | | | | | | | |
| | CLEC to CLEC Conversion Charge without outside dispatch | | | UHL | UREWO | | 86.32 | 40.48 | | | | | | | | |
| 4-WIRE DS1 DIGITAL LOOP | | | | | | | | | | | | | | | | |
| | 4-Wire DS1 Digital Loop - Zone 1 | | 1 | USL | USLXX | 79.51 | 253.03 | 157.89 | 44.80 | 11.73 | | | | | | |
| | 4-Wire DS1 Digital Loop - Zone 2 | | 2 | USL | USLXX | 136.00 | 253.03 | 157.89 | 44.80 | 11.73 | | | | | | |
| | 4-Wire DS1 Digital Loop - Zone 3 | | 3 | USL | USLXX | 229.15 | 253.03 | 157.89 | 44.80 | 11.73 | | | | | | |
| | Order Coordination for Specified Conversion Time (per LSR) | | | USL | OCOSL | | 18.13 | | | | | | | | | |

| UNBUNDLED NETWORK ELEMENTS - South Carolina | | | | | | | | | | | | | | Attachment: 2 | | Exhibit: A | |
|---|---|---|---|---|---|---|---|---|---|---|---|---|---|---|---|---|---|
| CATEGORY | | RATE ELEMENTS | Interim | Zone | BCS | USOC | RATES ($) | | | | | Svc Order Submitted Elec per LSR | Svc Order Submitted Manually per LSR | Incremental Charge - Manual Svc Order vs. Electronic-1st | Incremental Charge - Manual Svc Order vs. Electronic-Add'l | Incremental Charge - Manual Svc Order vs. Electronic-Disc 1st | Incremental Charge - Manual Svc Order vs. Electronic-Disc Add'l |
| | | | | | | | Rec | Nonrecurring | | Nonrecurring Disconnect | | OSS Rates ($) | | | | | |
| | | | | | | | | First | Add'l | First | Add'l | SOMEC | SOMAN | SOMAN | SOMAN | SOMAN | SOMAN |
| | | CLEC to CLEC Conversion Charge without outside dispatch | | | USL | UREWO | | 101.30 | 43.13 | | | | | | | | |
| | 4-WIRE 19.2, 56 OR 64 KBPS DIGITAL GRADE LOOP | | | | | | | | | | | | | | | | |
| | | 4 Wire Unbundled Digital 19.2 Kbps | | 1 | UDL | UDL19 | 29.93 | 126.66 | 89.12 | 59.35 | 14.61 | | | | | | |
| | | 4 Wire Unbundled Digital 19.2 Kbps | | 2 | UDL | UDL19 | 33.99 | 126.66 | 89.12 | 59.35 | 14.61 | | | | | | |
| | | 4 Wire Unbundled Digital 19.2 Kbps | | 3 | UDL | UDL19 | 34.74 | 126.66 | 89.12 | 59.35 | 14.61 | | | | | | |
| | | 4 Wire Unbundled Digital Loop 56 Kbps - Zone 1 | | 1 | UDL | UDL56 | 29.93 | 126.66 | 89.12 | 59.35 | 14.61 | | | | | | |
| | | 4 Wire Unbundled Digital Loop 56 Kbps - Zone 2 | | 2 | UDL | UDL56 | 33.99 | 126.66 | 89.12 | 59.35 | 14.61 | | | | | | |
| | | 4 Wire Unbundled Digital Loop 56 Kbps - Zone 3 | | 3 | UDL | UDL56 | 34.74 | 126.66 | 89.12 | 59.35 | 14.61 | | | | | | |
| | | Order Coordination for Specified Conversion Time (per LSR) | | | UDL | OCOSL | | 18.13 | | | | | | | | | |
| | | 4 Wire Unbundled Digital Loop 64 Kbps - Zone 1 | | 1 | UDL | UDL64 | 29.93 | 126.66 | 89.12 | 59.35 | 14.61 | | | | | | |
| | | 4 Wire Unbundled Digital Loop 64 Kbps - Zone 2 | | 2 | UDL | UDL64 | 33.99 | 126.66 | 89.12 | 59.35 | 14.61 | | | | | | |
| | | 4 Wire Unbundled Digital Loop 64 Kbps - Zone 3 | | 3 | UDL | UDL64 | 34.74 | 126.66 | 89.12 | 59.35 | 14.61 | | | | | | |
| | | Order Coordination for Specified Conversion Time (per LSR) | | | UDL | OCOSL | | 18.13 | | | | | | | | | |
| | | CLEC to CLEC Conversion Charge without outside dispatch | | | UDL | UREWO | | 102.34 | 49.85 | | | | | | | | |
| | 2-WIRE Unbundled COPPER LOOP | | | | | | | | | | | | | | | | |
| | | 2-Wire Unbundled Copper Loop-Designed including manual service inquiry & facility reservation - Zone 1 | | 1 | UCL | UCLPB | 12.19 | 119.91 | 69.62 | 50.37 | 7.93 | | | | | | |
| | | 2-Wire Unbundled Copper Loop-Designed including manual service inquiry & facility reservation - Zone 2 | | 2 | UCL | UCLPB | 13.71 | 119.91 | 69.62 | 50.37 | 7.93 | | | | | | |
| | | 2 Wire Unbundled Copper Loop-Designed including manual service inquiry & facility reservation - Zone 3 | | 3 | UCL | UCLPB | 14.14 | 119.91 | 69.62 | 50.37 | 7.93 | | | | | | |
| | | Order Coordination for Unbundled Copper Loops (per loop) | | | UCL | UCLMC | | 8.17 | 8.17 | | | | | | | | |
| | | 2-Wire Unbundled Copper Loop-Designed without manual service inquiry and facility reservation - Zone 1 | | 1 | UCL | UCLPW | 12.19 | 94.87 | 56.89 | 50.37 | 7.93 | | | | | | |
| | | 2-Wire Unbundled Copper Loop-Designed without manual service inquiry and facility reservation - Zone 2 | | 2 | UCL | UCLPW | 13.71 | 94.87 | 56.89 | 50.37 | 7.93 | | | | | | |
| | | 2-Wire Unbundled Copper Loop-Designed without manual service inquiry and facility reservation - Zone 3 | | 3 | UCL | UCLPW | 14.14 | 94.87 | 56.89 | 50.37 | 7.93 | | | | | | |
| | | Order Coordination for Unbundled Copper Loops (per loop) | | | UCL | UCLMC | | 8.17 | 8.17 | | | | | | | | |
| | | CLEC to CLEC Conversion Charge without outside dispatch (UCL-Des) | | | UCL | UREWO | | 94.87 | 42.57 | | | | | | | | |
| | 4-WIRE COPPER LOOP | | | | | | | | | | | | | | | | |
| | | 4-Wire Copper Loop-Designed including manual service inquiry and facility reservation - Zone 1 | | 1 | UCL | UCL4S | 19.64 | 144.17 | 93.88 | 55.12 | 10.38 | | | | | | |
| | | 4-Wire Copper Loop-Designed including manual service inquiry and facility reservation - Zone 2 | | 2 | UCL | UCL4S | 20.90 | 144.17 | 93.88 | 55.12 | 10.38 | | | | | | |
| | | 4-Wire Copper Loop-Designed including manual service inquiry and facility reservation - Zone 3 | | 3 | UCL | UCL4S | 19.34 | 144.17 | 93.88 | 55.12 | 10.38 | | | | | | |
| | | Order Coordination for Unbundled Copper Loops (per loop) | | | UCL | UCLMC | | 8.17 | 8.17 | | | | | | | | |
| | | 4-Wire Copper Loop-Designed without manual service inquiry and facility reservation - Zone 1 | | 1 | UCL | UCL4W | 19.64 | 119.13 | 81.15 | 55.12 | 10.38 | | | | | | |
| | | 4-Wire Copper Loop-Designed without manual service inquiry and facility reservation - Zone 2 | | 2 | UCL | UCL4W | 20.90 | 119.13 | 81.15 | 55.12 | 10.38 | | | | | | |
| | | 4-Wire Copper Loop-Designed without manual service inquiry and facility reservation - Zone 3 | | 3 | UCL | UCL4W | 19.34 | 119.13 | 81.15 | 55.12 | 10.38 | | | | | | |
| | | Order Coordination for Unbundled Copper Loops (per loop) | | | UCL | UCLMC | | 8.17 | 8.17 | | | | | | | | |
| | | CLEC to CLEC Conversion Charge without outside dispatch (UCL-Des) | | | UCL | UREWO | | 94.87 | 42.57 | | | | | | | | |
| LOOP MODIFICATION | | | | | | | | | | | | | | | | | |
| | | Unbundled Loop Modification, Removal of Load Coils - 2 Wire pair less than or equal to 18k ft, per Unbundled Loop | | | UAL, UHL, UCL, UEQ, ULS, UEA, UEANL, UEPSR, UEPSB | ULM2L | | 32.46 | 32.46 | | | | | | | | |
| | | Unbundled Loop Modification Removal of Load Coils - 4 Wire less than or equal to 18K ft, per Unbundled Loop | | | UHL, UCL, UEA | ULM4L | | 32.46 | 32.46 | | | | | | | | |
| | | Unbundled Loop Modification Removal of Bridged Tap Removal, per unbundled loop | | | UAL, UHL, UCL, UEQ, ULS, UEA, UEANL, UEPSR, UEPSB | ULMBT | | 32.48 | 32.48 | | | | | | | | |

| UNBUNDLED NETWORK ELEMENTS - South Carolina | | | | | | | | | | | | | | Attachment: 2 | | Exhibit: A | |
|---|---|---|---|---|---|---|---|---|---|---|---|---|---|---|---|---|---|
| CATEGORY | RATE ELEMENTS | Interim | Zone | BCS | USOC | RATES ($) | | | | | Svc Order Submitted Elec per LSR | Svc Order Submitted Manually per LSR | Incremental Charge - Manual Svc Order vs. Electronic-1st | Incremental Charge - Manual Svc Order vs. Electronic-Add'l | Incremental Charge - Manual Svc Order vs. Electronic-Disc 1st | Incremental Charge - Manual Svc Order vs. Electronic-Disc Add'l |
| | | | | | | Rec | Nonrecurring | | Nonrecurring Disconnect | | OSS Rates ($) | | | | | |
| | | | | | | | First | Add'l | First | Add'l | SOMEC | SOMAN | SOMAN | SOMAN | SOMAN | SOMAN |
| SUB-LOOPS | | | | | | | | | | | | | | | | |
| Sub-Loop Distribution | | | | | | | | | | | | | | | | |
| | Sub-Loop - Per Cross Box Location - CLEC Feeder Facility Set-Up | I | | UEANL | USBSA | | 241.42 | 241.42 | | | | | | | | |
| | Sub-Loop - Per Cross Box Location - Per 25 Pair Panel Set-Up | I | | UEANL | USBSB | | 22.69 | 22.69 | | | | | | | | |
| | Sub-Loop - Per Building Equipment Room - CLEC Feeder Facility Set-Up | I | | UEANL | USBSC | | 177.84 | 177.84 | | | | | | | | |
| | Sub-Loop - Per Building Equipment Room - Per 25 Pair Panel Set-Up | I | | UEANL | USBSD | | 55.58 | 55.58 | | | | | | | | |
| | Sub-Loop Distribution Per 2-Wire Analog Voice Grade Loop - Zone 1 | I | 1 | UEANL | USBN2 | 8.87 | 65.94 | 31.03 | 45.35 | 6.71 | | | | | | |
| | Sub-Loop Distribution Per 2-Wire Analog Voice Grade Loop - Zone 2 | I | 2 | UEANL | USBN2 | 12.58 | 65.94 | 31.03 | 45.35 | 6.71 | | | | | | |
| | Sub-Loop Distribution Per 2-Wire Analog Voice Grade Loop - Zone 3 | I | 3 | UEANL | USBN2 | 14.79 | 65.94 | 31.03 | 45.35 | 6.71 | | | | | | |
| | Order Coordination for Unbundled Sub-Loops, per sub-loop pair | | | UEANL | USBMC | | 8.17 | 8.17 | | | | | | | | |
| | Sub-Loop Distribution Per 4-Wire Analog Voice Grade Loop - Zone 1 | | 1 | UEANL | USBN4 | 14.11 | 79.21 | 44.29 | 49.82 | 9.09 | | | | | | |
| | Sub-Loop Distribution Per 4-Wire Analog Voice Grade Loop - Zone 2 | | 2 | UEANL | USBN4 | 19.40 | 79.21 | 44.29 | 49.82 | 9.09 | | | | | | |
| | Sub-Loop Distribution Per 4-Wire Analog Voice Grade Loop - Zone 3 | | 3 | UEANL | USBN4 | 18.90 | 79.21 | 44.29 | 49.82 | 9.09 | | | | | | |
| | Order Coordination for Unbundled Sub-Loops, per sub-loop pair | | | UEANL | USBMC | | 8.17 | 8.17 | | | | | | | | |
| | Sub-Loop 2-Wire Intrabuilding Network Cable (INC) | I | | UEANL | USBR2 | 2.41 | 53.13 | 18.21 | 45.35 | 6.71 | | | | | | |
| | Order Coordination for Unbundled Sub-Loops, per sub-loop pair | | | UEANL | USBMC | | 8.17 | 8.17 | | | | | | | | |
| | Sub-Loop 4-Wire Intrabuilding Network Cable (INC) | I | | UEANL | USBR4 | 5.36 | 59.38 | 24.47 | 49.82 | 9.09 | | | | | | |
| | Order Coordination for Unbundled Sub-Loops, per sub-loop pair | | | UEANL | USBMC | | 8.17 | 8.17 | | | | | | | | |
| | Loop Testing - Basic 1st Half Hour | | | UEANL | URET1 | | 34.23 | 34.23 | | | | | | | | |
| | Loop Testing - Basic Additional Half Hour | | | UEANL | URETA | | 19.90 | 19.90 | | | | | | | | |
| | 2 Wire Copper Unbundled Sub-Loop Distribution - Zone 1 | I | 1 | UEF | UCS2X | 7.11 | 65.94 | 31.03 | 45.35 | 6.71 | | | | | | |
| | 2 Wire Copper Unbundled Sub-Loop Distribution - Zone 2 | I | 2 | UEF | UCS2X | 9.83 | 65.94 | 31.03 | 45.35 | 6.71 | | | | | | |
| | 2 Wire Copper Unbundled Sub-Loop Distribution - Zone 3 | I | 3 | UEF | UCS2X | 10.48 | 65.94 | 31.03 | 45.35 | 6.71 | | | | | | |
| | Order Coordination for Unbundled Sub-Loops, per sub-loop pair | | | UEF | USBMC | | 8.17 | 8.17 | | | | | | | | |
| | 4 Wire Copper Unbundled Sub-Loop Distribution - Zone 1 | I | 1 | UEF | UCS4X | 7.85 | 79.21 | 44.29 | 49.82 | 9.09 | | | | | | |
| | 4 Wire Copper Unbundled Sub-Loop Distribution - Zone 2 | I | 2 | UEF | UCS4X | 14.17 | 79.21 | 44.29 | 49.82 | 9.09 | | | | | | |
| | 4 Wire Copper Unbundled Sub-Loop Distribution - Zone 3 | I | 3 | UEF | UCS4X | 12.64 | 79.21 | 44.29 | 49.82 | 9.09 | | | | | | |
| | Order Coordination for Unbundled Sub-Loops, per sub-loop pair | | | UEF | USBMC | | 8.17 | 8.17 | | | | | | | | |
| | Loop Testing - Basic 1st Half Hour | | | UEF | URET1 | | 34.23 | 34.23 | | | | | | | | |
| | Loop Testing - Basic Additional Half Hour | | | UEF | URETA | | 19.90 | 19.90 | | | | | | | | |
| Unbundled Network Terminating Wire (UNTW) | | | | | | | | | | | | | | | | |
| | Unbundled Network Terminating Wire (UNTW) per Pair | | | UENTW | UENPP | 0.3303 | 30.20 | 30.20 | | | | | | | | |
| Network Interface Device (NID) | | | | | | | | | | | | | | | | |
| | Network Interface Device (NID) - 1-2 lines | | | UENTW | UND12 | | 43.68 | 28.79 | | | | | | | | |
| | Network Interface Device (NID) - 1-6 lines | | | UENTW | UND16 | | 64.42 | 49.53 | | | | | | | | |
| | Network Interface Device Cross Connect - 2 W | | | UENTW | UNDC2 | | 5.92 | 5.92 | | | | | | | | |
| | Network Interface Device Cross Connect - 4W | | | UENTW | UNDC4 | | 5.92 | 5.92 | | | | | | | | |
| UNE OTHER, PROVISIONING ONLY - NO RATE | | | | | | | | | | | | | | | | |
| | NID - Dispatch and Service Order for NID installation | | | UENTW | UNDBX | 0.00 | 0.00 | | | | | | | | | |
| | UNTW Circuit Id Establishment, Provisioning Only - No Rate | | | UENTW | UENCE | 0.00 | 0.00 | | | | | | | | | |
| | Unbundled Contract Name, Provisioning Only - No Rate | | | UEANL,UEF,UEQ,UENTW | UNECN | 0.00 | 0.00 | | | | | | | | | |
| UNE OTHER, PROVISIONING ONLY - NO RATE | | | | | | | | | | | | | | | | |

| UNBUNDLED NETWORK ELEMENTS - South Carolina | | | | | | | | | | | | | | Attachment: 2 | | Exhibit: A | |
|---|---|---|---|---|---|---|---|---|---|---|---|---|---|---|---|---|---|
| CATEGORY | RATE ELEMENTS | Interim | Zone | BCS | USOC | RATES ($) | | | | | Svc Order Submitted Elec per LSR | Svc Order Submitted Manually per LSR | Incremental Charge - Manual Svc Order vs. Electronic-1st | Incremental Charge - Manual Svc Order vs. Electronic-Add'l | Incremental Charge - Manual Svc Order vs. Electronic-Disc 1st | Incremental Charge - Manual Svc Order vs. Electronic-Disc Add'l |
| | | | | | | Rec | Nonrecurring | | Nonrecurring Disconnect | | OSS Rates ($) | | | | | |
| | | | | | | | First | Add'l | First | Add'l | SOMEC | SOMAN | SOMAN | SOMAN | SOMAN | SOMAN |
| | Unbundled Contact Name, Provisioning Only - no rate | | | UAL,UCL,UDC,UDL,UDN,UEA,UHL,ULC | UNECN | 0.00 | 0.00 | | | | | | | | | |
| | Unbundled Sub-Loop Feeder-2 Wire Cross Box Jumper - no rate | | | UEA,UDN,UCL,UDC | USBFQ | 0.00 | 0.00 | | | | | | | | | |
| | Unbundled Sub-Loop Feeder-4 Wire Cross Box Jumper - no rate | | | UEA,USL,UCL,UDL | USBFR | 0.00 | 0.00 | | | | | | | | | |
| | Unbundled DS1 Loop - Superframe Format Option - no rate | | | USL | CCOSF | 0.00 | 0.00 | | | | | | | | | |
| | Unbundled DS1 Loop - Expanded Superframe Format option - no rate | | | USL | CCOEF | 0.00 | 0.00 | | | | | | | | | |
| **HIGH CAPACITY UNBUNDLED LOCAL LOOP** | | | | | | | | | | | | | | | | | |
| | High Capacity Unbundled Local Loop - DS3 - Per Mile per month | | | UE3 | 1L5ND | 12.26 | | | | | | | | | | |
| | High Capacity Unbundled Local Loop - DS3 - Facility Termination per month | | | UE3 | UE3PX | 306.36 | 452.52 | 264.53 | 119.75 | 83.77 | | | | | | |
| | High Capacity Unbundled Local Loop - STS-1 - Per Mile per month | | | UDLSX | 1L5ND | 12.26 | | | | | | | | | | |
| | High Capacity Unbundled Local Loop - STS-1 - Facility Termination per month | | | UDLSX | UDLS1 | 313.49 | 452.52 | 264.53 | 119.75 | 83.77 | | | | | | |
| **LOOP MAKE-UP** | | | | | | | | | | | | | | | | | |
| | Loop Makeup - Preordering Without Reservation, per working or spare facility queried (Manual). | | | UMK | UMKLW | | 24.04 | 24.04 | | | | | | | | |
| | Loop Makeup - Preordering With Reservation, per spare facility queried (Manual). | | | UMK | UMKLP | | 25.49 | 25.49 | | | | | | | | |
| | Loop Makeup--With or Without Reservation, per working or spare facility queried (Mechanized) | | | UMK | UMKMQ | | 0.34 | 0.34 | | | | | | | | |
| **LINE SHARING AND LINE SPLITTING** | | | | | | | | | | | | | | | | | |
| | **NOTE 1: The Line Sharing monthly recurring rates for all installations completed from October 02, 2003 through midnight October 01, 2004 shall be billed as follows:** | | | | | | | | | | | | | | | | |
| | **NOTE 1: 10/02/2003 – 10/01/2004: 25% of the rate for an unbundled copper loop non-designed ("UCLND")** | | | | | | | | | | | | | | | | |
| | **NOTE 1: 10/02/2004 – 10/01/2005: 50% of the rate for UCLND** | | | | | | | | | | | | | | | | |
| | **NOTE 1: 10/02/2005 – 10/01/2006: 75% of the rate for UCLND** | | | | | | | | | | | | | | | | |
| | **NOTE 1: Above will apply to USOCS: ULSDT and ULSCT** | | | | | | | | | | | | | | | | |
| | ****NOTE 2: The Line Sharing monthly recurring rates with USOCs ULSDC and ULSCC applies only to circuits installed and inservice on or before October 1, 2003** | | | | | | | | | | | | | | | | |
| | **LINE SHARING** | | | | | | | | | | | | | | | | |
| | **SPLITTERS-CENTRAL OFFICE BASED** | | | | | | | | | | | | | | | | |
| | Line Sharing Splitter, per System 96 Line Capacity | | | ULS | ULSDA | 216.22 | 189.21 | 0.00 | 178.38 | 0.00 | | | | | | |
| | Line Sharing Splitter, per System 24 Line Capacity | | | ULS | ULSDB | 54.05 | 189.21 | 0.00 | 178.38 | 0.00 | | | | | | |
| | Line Sharing Splitter, Per System, 8 Line Capacity | | | ULS | ULSD8 | 18.02 | 189.21 | 0.00 | 178.38 | 0.00 | | | | | | |
| | Line Sharing-DLEC Owned Splitter in CO-CFA activaton-deactivation (per LSOD) | | | ULS | ULSDG | | 86.67 | 0.00 | 49.95 | 0.00 | | | | | | |
| | **END USER ORDERING-CENTRAL OFFICE BASED LINE SHARING** | | | | | | | | | | | | | | | | |
| | Line Sharing - per Line Activation (BST Owned splitter) - OBSOLETE see **NOTE 2 | | | ULS | ULSDC | 0.61 | 18.55 | 10.62 | 10.04 | 4.93 | | | | | | |
| | Line Share Service, TRO per line activation, BST owned splitter - Central Office Located (25% of UCLND) - please see NOTE 1 (E:10/2/2003) | | | ULS | ULSDT | 3.24 | 18.55 | 10.62 | 10.04 | 4.93 | | | | | | |
| | Line Share Service, TRO per line activation, BST owned splitter - Central Office Located (50% of UCLND) - please see NOTE 1 (E:10/2/2004) | | | ULS | ULSDT | 6.47 | 18.55 | 10.62 | 10.04 | 4.93 | | | | | | |
| | Line Share Service, TRO per line activation, BST owned splitter - Central Office Located (75% of UCLND) - please see NOTE 1 (E:10/2/2005) | | | ULS | ULSDT | 9.71 | 18.55 | 10.62 | 10.04 | 4.93 | | | | | | |
| | Line Sharing - per Subsequent Activity per Line Rearrangement(BST Owned Splitter) | | | ULS | ULSDS | | 16.42 | 8.21 | | | | | | | | |
| | Line Sharing - per Subsequent Activity per Line Rearrangement(DLEC Owned Splitter) | | | ULS | ULSCS | | 16.42 | 8.21 | | | | | | | | |
| | Line Sharing - per Line Activation (DLEC owned Splitter) - OBSOLETE see **NOTE 2 | | | ULS | ULSCC | 0.61 | 47.44 | 19.31 | 20.67 | 12.74 | | | | | | |

| UNBUNDLED NETWORK ELEMENTS - South Carolina | | | | | | | | | | | | | | Attachment: 2 | | Exhibit: A | |
|---|---|---|---|---|---|---|---|---|---|---|---|---|---|---|---|---|---|
| CATEGORY | RATE ELEMENTS | Interim | Zone | BCS | USOC | RATES ($) | | | | | Svc Order Submitted Elec per LSR | Svc Order Submitted Manually per LSR | Incremental Charge - Manual Svc Order vs. Electronic-1st | Incremental Charge - Manual Svc Order vs. Electronic-Add'l | Incremental Charge - Manual Svc Order vs. Electronic-Disc 1st | Incremental Charge - Manual Svc Order vs. Electronic-Disc Add'l |
| | | | | | | Rec | Nonrecurring | | Nonrecurring Disconnect | | OSS Rates ($) | | | | | |
| | | | | | | | First | Add'l | First | Add'l | SOMEC | SOMAN | SOMAN | SOMAN | SOMAN | SOMAN |
| | Line Share Service, TRO per line activation, CLEC owned splitter - Central Office Located (25% of UCLND) - please see NOTE 1 (E:10/2/2003) | | | ULS | ULSCT | 3.24 | 47.44 | 19.31 | 20.67 | 12.74 | | | | | | |
| | Line Share Service, TRO per line activation, CLEC owned splitter - Central Office Located (50% of UCLND) - please see NOTE 1 (E:10/2/2004) | | | ULS | ULSCT | 6.47 | 47.44 | 19.31 | 20.67 | 12.74 | | | | | | |
| | Line Share Service, TRO per line activation, CLEC owned splitter - Central Office Located (75% of UCLND) - please see NOTE 1 (E:10/2/2005) | | | ULS | ULSCT | 9.71 | 47.44 | 19.31 | 20.67 | 12.74 | | | | | | |
| LINE SPLITTING | | | | | | | | | | | | | | | | |
| END USER ORDERING-CENTRAL OFFICE BASED | | | | | | | | | | | | | | | | |
| | Line Splitting - per line activation DLEC owned splitter | | | UEPSR UEPSB | UREOS | 0.61 | | | | | | | | | | |
| | Line Splitting - per line activation BST owned - physical | | | UEPSR UEPSB | UREBP | 0.61 | 37.09 | 21.24 | 20.07 | 9.85 | | | | | | |
| | Line Splitting - per line activation BST owned - virtual | | | UEPSR UEPSB | UREBV | 0.61 | 37.09 | 21.24 | 20.07 | 9.85 | | | | | | |
| MAINTENANCE | | | | | | | | | | | | | | | | |
| | No Trouble Found - per 1/2 hour increments - Basic | | | | | | 80.00 | 55.00 | | | | | | | | |
| | No Trouble Found - per 1/2 hour increments - Overtime | | | | | | 120.00 | 82.50 | | | | | | | | |
| | No Trouble Found - per 1/2 hour increments - Premium | | | | | | 160.00 | 110.00 | | | | | | | | |
| UNBUNDLED DEDICATED TRANSPORT | | | | | | | | | | | | | | | | |
| INTEROFFICE CHANNEL - DEDICATED TRANSPORT | | | | | | | | | | | | | | | | |
| | Interoffice Channel - Dedicated Transport - 2-Wire Voice Grade - Per Mile per month | | | U1TVX | 1L5XX | 0.0167 | | | | | | | | | | |
| | Interoffice Channel - Dedicated Transport- 2- Wire Voice Grade - Facility Termination | | | U1TVX | U1TV2 | 24.30 | 40.63 | 27.47 | 16.77 | 6.91 | | | | | | |
| | Interoffice Channel - Dedicated Transpor t- 2-Wire Voice Grade Rev Bat. - Per Mile per month | | | U1TVX | 1L5XX | 0.0167 | | | | | | | | | | |
| | Interoffice Channel - Dedicated Transport- 2- Wire VG Rev Bat. - Facility Termination | | | U1TVX | U1TR2 | 24.30 | 40.63 | 27.47 | 16.77 | 6.91 | | | | | | |
| | Interoffice Channel - Dedicated Transport - 4-Wire Voice Grade - Per Mile per month | | | U1TVX | 1L5XX | 0.0167 | | | | | | | | | | |
| | Interoffice Channel - Dedicated Transport - 4- Wire Voice Grade - Facility Termination | | | U1TVX | U1TV4 | 21.29 | 40.63 | 27.47 | 16.77 | 6.91 | | | | | | |
| | Interoffice Channel - Dedicated Transport - 56 kbps - per mile per month | | | U1TDX | 1L5XX | 0.0167 | | | | | | | | | | |
| | Interoffice Channel - Dedicated Transport - 56 kbps - Facility Termination | | | U1TDX | U1TD5 | 16.76 | 40.63 | 27.47 | 16.77 | 6.91 | | | | | | |
| | Interoffice Channel - Dedicated Transport - 64 kbps - per mile per month | | | U1TDX | 1L5XX | 0.0167 | | | | | | | | | | |
| | Interoffice Channel - Dedicated Transport - 64 kbps - Facility Termination | | | U1TDX | U1TD6 | 16.76 | 40.63 | 27.47 | 16.77 | 6.91 | | | | | | |
| | Interoffice Channel - Dedicated Channel - DS1 - Per Mile per month | | | U1TD1 | 1L5XX | 0.3415 | | | | | | | | | | |
| | Interoffice Channel - Dedicated Tranport - DS1 - Facility Termination | | | U1TD1 | U1TF1 | 77.14 | 89.47 | 81.99 | 16.39 | 14.48 | | | | | | |
| | Interoffice Channel - Dedicated Transport - DS3 - Per Mile per month | | | U1TD3 | 1L5XX | 8.02 | | | | | | | | | | |
| | Interoffice Channel - Dedicated Transport - DS3 - Facility Termination per month | | | U1TD3 | U1TF3 | 880.65 | 279.37 | 163.12 | 60.33 | 58.59 | | | | | | |
| | Interoffice Channel - Dedicated Transport - STS-1 - Per Mile per month | | | U1TS1 | 1L5XX | 8.02 | | | | | | | | | | |
| | Interoffice Channel - Dedicated Transport - STS-1 - Facility Termination | | | U1TS1 | U1TFS | 880.55 | 279.37 | 163.12 | 60.33 | 58.59 | | | | | | |
| DARK FIBER | | | | | | | | | | | | | | | | |
| | Dark Fiber, Four Fiber Strands, Per Route Mile or Fraction Thereof per month - Interoffice Channel | | | UDF, UDFCX | 1L5DF | 36.41 | | | | | | | | | | |
| | NRC Dark Fiber - Interoffice Channel | | | UDF, UDFCX | UDF14 | | 640.51 | 138.17 | 317.76 | 198.11 | | | | | | |
| | Dark Fiber, Four Fiber Strands, Per Route Mile or Fraction Thereof per month - Local Loop | | | UDF, UDFCX | 1L5DL | 97.65 | | | | | | | | | | |
| | NRC Dark Fiber - Local Loop | | | UDF, UDFCX | UDFL4 | | 640.51 | 138.17 | 317.76 | 198.11 | | | | | | |

| UNBUNDLED NETWORK ELEMENTS - South Carolina | | | | | | | | | | | | | Attachment: 2 | | Exhibit: A | |
|---|---|---|---|---|---|---|---|---|---|---|---|---|---|---|---|---|
| CATEGORY | RATE ELEMENTS | Interim | Zone | BCS | USOC | RATES ($) | | | | | Svc Order Submitted Elec per LSR | Svc Order Submitted Manually per LSR | Incremental Charge - Manual Svc Order vs. Electronic-1st | Incremental Charge - Manual Svc Order vs. Electronic-Add'l | Incremental Charge - Manual Svc Order vs. Electronic-Disc 1st | Incremental Charge - Manual Svc Order vs. Electronic-Disc Add'l |
| | | | | | | Rec | Nonrecurring | | Nonrecurring Disconnect | | OSS Rates ($) | | | | | |
| | | | | | | | First | Add'l | First | Add'l | SOMEC | SOMAN | SOMAN | SOMAN | SOMAN | SOMAN |
| 8XX ACCESS TEN DIGIT SCREENING | | | | | | | | | | | | | | | | |
| | 8XX Access Ten Digit Screening, Per Call | | | OHD | | 0.0006673 | | | | | | | | | | |
| | 8XX Access Ten Digit Screening, Reservation Charge Per 8XX Number Reserved | | | OHD | N8R1X | | 2.59 | 0.44 | | | | | | | | |
| | 8XX Access Ten Digit Screening, Per 8XX No. Established W/O POTS Translations | | | OHD | | | 5.95 | 0.81 | 4.58 | 0.54 | | | | | | |
| | 8XX Access Ten Digit Screening, Per 8XX No. Established With POTS Translations | | | OHD | N8FTX | | 5.95 | 0.81 | 4.58 | 0.54 | | | | | | |
| | 8XX Access Ten Digit Screening, Customized Area of Service Per 8XX Number | | | OHD | N8FCX | | 2.59 | 1.30 | | | | | | | | |
| | 8XX Access Ten Digit Screening, Multiple InterLATA CXR Routing Per CXR Requested Per 8XX No. | | | OHD | N8FMX | | 3.03 | 1.74 | | | | | | | | |
| | 8XX Access Ten Digit Screening, Change Charge Per Request | | | OHD | N8FAX | | 3.03 | 0.44 | | | | | | | | |
| | 8XX Access Ten Digit Screening, Call Handling and Destination Features | | | OHD | N8FDX | | 2.59 | 2.59 | | | | | | | | |
| | 8XX Access Ten Digit Screening, w/ 8XX No. Delivery | | | OHD | | 0.0006673 | | | | | | | | | | |
| | 8XX Access Ten Digit Screening, w/ POTS No. Delivery | | | OHD | | 0.0006673 | | | | | | | | | | |
| LINE INFORMATION DATA BASE ACCESS (LIDB) | | | | | | | | | | | | | | | | |
| | LIDB Common Transport Per Query | | | OQT | | 0.0000246 | | | | | | | | | | |
| | LIDB Validation Per Query | | | OQU | | 0.0138158 | | | | | | | | | | |
| | LIDB Originating Point Code Establishment or Change | | | OQT, OQU | NRBPX | | 34.40 | | 42.18 | | | | | | | |
| SIGNALING (CCS7) | | | | | | | | | | | | | | | | |
| | CCS7 Signaling Connection, Per 56 Kbps Facility | | | UDB | TPP++ | 16.93 | 35.61 | 35.61 | 16.48 | 16.48 | | | | | | |
| | CCS7 Signaling Termination, Per STP Port | | | UDB | PT8SX | 163.49 | | | | | | | | | | |
| | CCS7 Signaling Usage, Per TCAP Message | | | UDB | | 0.0000692 | | | | | | | | | | |
| | CCS7 Signaling Connection, Per link (A link) | | | UDB | TPP++ | 16.93 | 35.61 | 35.61 | 16.48 | 16.48 | | | | | | |
| | CCS7 Signaling Connection, Per link (B link) (also known as D link) | | | UDB | TPP++ | 16.93 | 35.61 | 35.61 | 16.48 | 16.48 | | | | | | |
| | CCS7 Signaling Usage, Per ISUP Message | | | UDB | | 0.0000173 | | | | | | | | | | |
| | CCS7 Signaling Usage Surrogate, per link per LATA | | | UDB | STU56 | 791.37 | | | | | | | | | | |
| | CCS7 Signaling Point Code, per Originating Point Code Establishment or Change, per STP affected | | | UDB | CCAPO | | 29.08 | 29.08 | 35.65 | 35.65 | | | | | | |
| | CCS7 Signaling Point Code, per Destination Point Code Establishment or Change, Per Stp Affected | | | UDB | CCAPD | | 29.08 | 29.08 | 35.65 | 35.65 | | | | | | |
| E911 SERVICE | | | | | | | | | | | | | | | | |
| | Local Channel - Dedicated - 2-wr Voice Grade | | | | | 15.33 | 193.53 | 33.24 | 36.72 | 3.21 | | | | | | |
| | Interoffice Transport - Dedicated - 2-wr Voice Grade Per Mile | | | | | 0.0167 | | | | | | | | | | |
| | Interoffice Transport - Dedicated - 2-wr Voice Grade Per Facility Termination | | | | | 24.30 | 40.63 | 27.47 | 16.77 | 6.91 | | | | | | |
| | Local Channel - Dedicated - DS1 - Zone 1 | | | | | 42.62 | 177.87 | 154.06 | 22.24 | 15.30 | | | | | | |
| | Local Channel - Dedicated - DS1 - Zone 2 | | | | | 70.32 | 177.87 | 154.06 | 22.24 | 15.30 | | | | | | |
| | Local Channel - Dedicated - DS1 - Zone 3 | | | | | 190.68 | 177.87 | 154.06 | 22.24 | 15.30 | | | | | | |
| | Interoffice Transport - Dedicated - DS1 Per Mile | | | | | 0.3415 | | | | | | | | | | |
| | Interoffice Transport - Dedicated - DS1 Per Facility Termination | | | | | 77.14 | 89.47 | 81.99 | 16.39 | 14.48 | | | | | | |
| CALLING NAME (CNAM) SERVICE | | | | | | | | | | | | | | | | |
| | CNAM For DB Owners - Service Establishment | | | OQV | | | 23.00 | 23.00 | 21.15 | 21.15 | | | | | | |
| | CNAM For Non DB Owners - Service Establishment | | | OQV | | | 23.00 | 23.00 | 21.15 | 21.15 | | | | | | |
| | CNAM For DB Owners - Service Provisioning With Point Code Establishment | | | OQV | | | 993.09 | 734.47 | 269.53 | 198.18 | | | | | | |
| | CNAM For Non DB Owners - Service Provisioning With Point Code Establishment | | | OQV | | | 343.09 | 245.69 | 275.87 | 198.18 | | | | | | |
| | CNAM for DB Owners, Per Query | | | OQV | | 0.0010433 | | | | | | | | | | |
| | CNAM for Non DB Owners, Per Query | | | OQV | | 0.0010433 | | | | | | | | | | |
| SELECTIVE ROUTING | | | | | | | | | | | | | | | | |
| | Selective Routing Per Unique Line Class Code Per Request Per Switch | | | | | | 84.89 | 84.89 | 14.14 | 14.14 | | | | | | |
| VIRTUAL COLLOCATION | | | | | | | | | | | | | | | | |

| UNBUNDLED NETWORK ELEMENTS - South Carolina | | | | | | | | | | | | | | Attachment: 2 | | Exhibit: A | |
|---|---|---|---|---|---|---|---|---|---|---|---|---|---|---|---|---|---|
| CATEGORY | | RATE ELEMENTS | Interim | Zone | BCS | USOC | RATES ($) | | | | | Svc Order Submitted Elec per LSR | Svc Order Submitted Manually per LSR | Incremental Charge - Manual Svc Order vs. Electronic-1st | Incremental Charge - Manual Svc Order vs. Electronic-Add'l | Incremental Charge - Manual Svc Order vs. Electronic-Disc 1st | Incremental Charge - Manual Svc Order vs. Electronic-Disc Add'l |
| | | | | | | | Rec | Nonrecurring | | Nonrecurring Disconnect | | OSS Rates ($) | | | | | |
| | | | | | | | | First | Add'l | First | Add'l | SOMEC | SOMAN | SOMAN | SOMAN | SOMAN | SOMAN |
| | | Virtual Collocation-2 Wire Cross Connects (Loop) for Line Splitting | | | UEPSR UEPSB | VE1LS | 0.0317 | 12.32 | 11.83 | 6.04 | 5.45 | | | | | | |
| PHYSICAL COLLOCATION | | | | | | | | | | | | | | | | | |
| | | Physical Collocation-2 Wire Cross Connects (Loop) for Line Splitting | | | UEPSR UEPSB | PE1LS | 0.0341 | 12.32 | 11.83 | 6.04 | 5.45 | | | | | | |
| AIN SELECTIVE CARRIER ROUTING | | | | | | | | | | | | | | | | | |
| | | Regional Service Establishment | | | SRC | SRCEC | | 101,324.34 | 101,324.34 | 8,609.85 | 8,609.85 | | | | | | |
| | | End Office Establishment | | | SRC | SRCEO | | 175.66 | 175.66 | 1.70 | 1.70 | | | | | | |
| | | Query NRC, per query | | | SRC | | 0.0035036 | | | | | | | | | | |
| AIN - BELLSOUTH AIN SMS ACCESS SERVICE | | | | | | | | | | | | | | | | | |
| | | AIN SMS Access Service - Service Establishment, Per State, Initial Setup | | | A1N | CAMSE | | 39.53 | 39.53 | 40.78 | 40.78 | | | | | | |
| | | AIN SMS Access Service - Port Connection - Dial/Shared Access | | | A1N | CAMDP | | 7.85 | 7.85 | 9.11 | 9.11 | | | | | | |
| | | AIN SMS Access Service - Port Connection - ISDN Access | | | A1N | CAM1P | | 7.85 | 7.85 | 9.11 | 9.11 | | | | | | |
| | | AIN SMS Access Service - User Identification Codes - Per User ID Code | | | A1N | CAMAU | | 35.08 | 35.08 | 27.12 | 27.12 | | | | | | |
| | | AIN SMS Access Service - Security Card, Per User ID Code, Initial or Replacement | | | A1N | CAMRC | | 41.98 | 41.98 | 11.74 | 11.74 | | | | | | |
| | | AIN SMS Access Service - Storage, Per Unit (100 Kilobytes) | | | | | 0.0027 | | | | | | | | | | |
| | | AIN SMS Access Service - Session, Per Minute | | | | | 0.7121 | | | | | | | | | | |
| | | AIN SMS Access Service - Company Performed Session, Per Minute | | | | | 0.8364 | | | | | | | | | | |
| AIN - BELLSOUTH AIN TOOLKIT SERVICE | | | | | | | | | | | | | | | | | |
| | | AIN Toolkit Service - Service Establishment Charge, Per State, Initial Setup | | | CAM | BAPSC | | 39.53 | 39.53 | 40.78 | 40.78 | | | | | | |
| | | AIN Toolkit Service - Training Session, Per Customer | | | | BAPVX | | 4,211.54 | 4,211.54 | 0.00 | 0.00 | | | | | | |
| | | AIN Toolkit Service - Trigger Access Charge, Per Trigger, Per DN, Term. Attempt | | | | BAPTT | | 7.85 | 7.85 | 9.11 | 9.11 | | | | | | |
| | | AIN Toolkit Service - Trigger Access Charge, Per Trigger, Per DN, Off-Hook Delay | | | | BAPTD | | 7.85 | 7.85 | 9.11 | 9.11 | | | | | | |
| | | AIN Toolkit Service - Trigger Access Charge, Per Trigger, Per DN, Off-Hook Immediate | | | | BAPTM | | 7.85 | 7.85 | 9.11 | 9.11 | | | | | | |
| | | AIN Toolkit Service - Trigger Access Charge, Per Trigger, Per DN, 10-Digit PODP | | | | BAPTO | | 34.54 | 34.54 | 14.39 | 14.39 | | | | | | |
| | | AIN Toolkit Service - Trigger Access Charge, Per Trigger, Per DN, CDP | | | | BAPTC | | 34.54 | 34.54 | 14.39 | 14.39 | | | | | | |
| | | AIN Toolkit Service - Trigger Access Charge, Per Trigger, Per DN, Feature Code | | | | BAPTF | | 34.54 | 34.54 | 14.39 | 14.39 | | | | | | |
| | | AIN Toolkit Service - Query Charge, Per Query | | | | | 0.0558238 | | | | | | | | | | |
| | | AIN Toolkit Service - Type 1 Node Charge, Per AIN Toolkit Subscription, Per Node, Per Query | | | | | 0.0069214 | | | | | | | | | | |
| | | AIN Toolkit Service - SCP Storage Charge, Per SMS Access Account, Per 100 Kilobytes | | | | | 0.07 | | | | | | | | | | |
| | | AIN Toolkit Service - Monthly report - Per AIN Toolkit Service Subscription | | | CAM | BAPMS | 11.87 | 7.85 | 7.85 | 5.52 | 5.52 | | | | | | |
| | | AIN Toolkit Service - Special Study - Per AIN Toolkit Service Subscription | | | CAM | BAPLS | 3.51 | 8.68 | 8.68 | | | | | | | | |
| | | AIN Toolkit Service - Call Event Report - Per AIN Toolkit Service Subscription | | | CAM | BAPDS | 8.48 | 7.85 | 7.85 | 5.52 | 5.52 | | | | | | |
| | | AIN Toolkit Service - Call Event Special Study - Per AIN Toolkit Service Subscription | | | CAM | BAPES | 0.12 | 8.68 | 8.68 | | | | | | | | |
| ENHANCED EXTENDED LINK (EELs) | | | | | | | | | | | | | | | | | |
| | | NOTE: The monthly recurring and non-recurring charges below will apply and the Switch-As-Is Charge will not apply for UNE combinations provisioned as ' Ordinarily Combined' Network Elements. | | | | | | | | | | | | | | | |
| | | NOTE: The monthly recurring and the Switch-As-Is Charge and not the non-recurring charges below will apply for UNE combinations provisioned as ' Currently Combined' Network Elements. | | | | | | | | | | | | | | | |
| | | EXTENTED 2-WIRE VOICE GRADE EXTENDED LOOP WITH DEDICATED DS1 INTEROFFICE TRANSPORT | | | | | | | | | | | | | | | |
| | | First 2-Wire VG Loop (SL2) in Combination - Zone 1 | | 1 | UNCVX | UEAL2 | 16.68 | 105.98 | 68.43 | 53.05 | 10.61 | | | | | | |
| | | First 2-Wire VG Loop (SL2) in Combination - Zone 2 | | 2 | UNCVX | UEAL2 | 23.13 | 105.98 | 68.43 | 53.05 | 10.61 | | | | | | |
| | | First 2-Wire VG Loop (SL2) in Combination - Zone 3 | | 3 | UNCVX | UEAL2 | 28.46 | 105.98 | 68.43 | 53.05 | 10.61 | | | | | | |

| UNBUNDLED NETWORK ELEMENTS - South Carolina | | | | | | | | | | | | | | Attachment: 2 | | Exhibit: A | |
|---|---|---|---|---|---|---|---|---|---|---|---|---|---|---|---|---|---|
| CATEGORY | | RATE ELEMENTS | Interim | Zone | BCS | USOC | RATES ($) | | | | | Svc Order Submitted Elec per LSR | Svc Order Submitted Manually per LSR | Incremental Charge - Manual Svc Order vs. Electronic-1st | Incremental Charge - Manual Svc Order vs. Electronic-Add'l | Incremental Charge - Manual Svc Order vs. Electronic-Disc 1st | Incremental Charge - Manual Svc Order vs. Electronic-Disc Add'l |
| | | | | | | | Rec | Nonrecurring | | Nonrecurring Disconnect | | OSS Rates ($) | | | | | |
| | | | | | | | | First | Add'l | First | Add'l | SOMEC | SOMAN | SOMAN | SOMAN | SOMAN | SOMAN |
| | | Interoffice Transport - Dedicated - DS1 combination - Per Mile per month | | | UNC1X | 1L5XX | 0.27 | | | | | | | | | | |
| | | Interoffice Transport - Dedicated - DS1 combination - Facility Termination per month | | | UNC1X | U1TF1 | 61.71 | 89.47 | 81.99 | 16.39 | 14.48 | | | | | | |
| | | 1/0 Channelization System in combination Per Month | | | UNC1X | MQ1 | 107.57 | 91.24 | 62.71 | 10.56 | 9.81 | | | | | | |
| | | Voice Grade COCI - Per Month | | | UNCVX | 1D1VG | 0.56 | 6.59 | 4.73 | 0.00 | 0.00 | | | | | | |
| | | Each Additional 2-Wire VG Loop (SL 2) in Combination - Zone 1 | | 1 | UNCVX | UEAL2 | 16.68 | 105.98 | 68.43 | 53.05 | 10.61 | | | | | | |
| | | Each Additional 2-Wire VG Loop (SL 2) in Combination - Zone 2 | | 2 | UNCVX | UEAL2 | 23.13 | 105.98 | 68.43 | 53.05 | 10.61 | | | | | | |
| | | Each Additional 2-Wire VG Loop (SL 2) in Combination - Zone 3 | | 3 | UNCVX | UEAL2 | 28.46 | 105.98 | 68.43 | 53.05 | 10.61 | | | | | | |
| | | Voice Grade COCI - Per Month | | | UNCVX | 1D1VG | 0.56 | 6.59 | 4.73 | 0.00 | 0.00 | | | | | | |
| | | Nonrecurring Currently Combined Network Elements Switch -As-Is Charge | | | UNC1X | UNCCC | | 5.61 | 5.61 | 7.00 | 7.00 | | | | | | |
| | | EXTENDED 4-WIRE VOICE GRADE EXTENDED LOOP WITH DEDICATED DS1 INTEROFFICE TRANSPORT | | | | | | | | | | | | | | | |
| | | First 4-Wire Analog Voice Grade Loop in Combination - Zone 1 | | 1 | UNCVX | UEAL4 | 32.59 | 132.38 | 94.83 | 59.35 | 14.61 | | | | | | |
| | | First 4-Wire Analog Voice Grade Loop in Combination - Zone 2 | | 2 | UNCVX | UEAL4 | 43.89 | 132.38 | 94.83 | 59.35 | 14.61 | | | | | | |
| | | First 4-Wire Analog Voice Grade Loop in Combination - Zone 3 | | 3 | UNCVX | UEAL4 | 43.38 | 132.38 | 94.83 | 59.35 | 14.61 | | | | | | |
| | | Interoffice Transport - Dedicated - DS1 combination - Per Mile Per Month | | | UNC1X | 1L5XX | 0.27 | | | | | | | | | | |
| | | Interoffice Transport - Dedicated - DS1 - Facility Termination Per Month | | | UNC1X | U1TF1 | 61.71 | 89.47 | 81.99 | 16.39 | 14.48 | | | | | | |
| | | 1/0 Channel System in combination Per Month | | | UNC1X | MQ1 | 107.57 | 91.24 | 62.71 | 10.56 | 9.81 | | | | | | |
| | | Voice Grade COCI in combination - per month | | | UNCVX | 1D1VG | 0.56 | 6.59 | 4.73 | 0.00 | 0.00 | | | | | | |
| | | Additional 4-Wire Analog Voice Grade Loop in same DS1 Interoffice Transport Combination - Zone 1 | | 1 | UNCVX | UEAL4 | 32.59 | 132.38 | 94.83 | 59.35 | 14.61 | | | | | | |
| | | Additional 4-Wire Analog Voice Grade Loop in same DS1 Interoffice Transport Combination - Zone 2 | | 2 | UNCVX | UEAL4 | 43.89 | 132.38 | 94.83 | 59.35 | 14.61 | | | | | | |
| | | Additional 4-Wire Analog Voice Grade Loop in same DS1 Interoffice Transport Combination - Zone 3 | | 3 | UNCVX | UEAL4 | 43.38 | 132.38 | 94.83 | 59.35 | 14.61 | | | | | | |
| | | Additional Voice Grade COCI in combination - per month | | | UNCVX | 1D1VG | 0.56 | 6.59 | 4.73 | 0.00 | 0.00 | | | | | | |
| | | Nonrecurring Currently Combined Network Elements Switch -As-Is Charge | | | UNC1X | UNCCC | | 5.61 | 5.61 | 7.00 | 7.00 | | | | | | |
| | | EXTENDED 4-WIRE 56 KBPS EXTENDED DIGITAL LOOP WITH DEDICATED DS1 INTEROFFICE TRANSPORT | | | | | | | | | | | | | | | |
| | | First 4-Wire 56Kbps Digital Grade Loop in Combination - Zone 1 | | 1 | UNCDX | UDL56 | 29.93 | 126.66 | 89.12 | 59.35 | 14.61 | | | | | | |
| | | First 4-Wire 56Kbps Digital Grade Loop in Combination - Zone 2 | | 2 | UNCDX | UDL56 | 33.99 | 126.66 | 89.12 | 59.35 | 14.61 | | | | | | |
| | | First 4-Wire 56Kbps Digital Grade Loop in Combination - Zone 3 | | 3 | UNCDX | UDL56 | 34.74 | 126.66 | 89.12 | 59.35 | 14.61 | | | | | | |
| | | Interoffice Transport - Dedicated - DS1 combination - Per Mile Per Month | | | UNC1X | 1L5XX | 0.27 | | | | | | | | | | |
| | | Interoffice Transport - Dedicated - DS1 - combination Facility Termination Per Month | | | UNC1X | U1TF1 | 61.71 | 89.47 | 81.99 | 16.39 | 14.48 | | | | | | |
| | | 1/0 Channel System in combination Per Month | | | UNC1X | MQ1 | 107.57 | 91.24 | 62.71 | 10.56 | 9.81 | | | | | | |
| | | OCU-DP COCI (data) per month (2.4-64kbs) | | | UNCDX | 1D1DD | 1.19 | 6.59 | 4.73 | 0.00 | 0.00 | | | | | | |
| | | Additional 4-Wire 56Kbps Digital Grade Loop in same DS1 Interoffice Transport Combination - Zone 1 | | 1 | UNCDX | UDL56 | 29.93 | 126.66 | 89.12 | 59.35 | 14.61 | | | | | | |
| | | Additional 4-Wire 56Kbps Digital Grade Loop in same DS1 Interoffice Transport Combination - Zone 2 | | 2 | UNCDX | UDL56 | 33.99 | 126.66 | 89.12 | 59.35 | 14.61 | | | | | | |
| | | Additional 4-Wire 56Kbps Digital Grade Loop in same DS1 Interoffice Transport Combination - Zone 3 | | 3 | UNCDX | UDL56 | 34.74 | 126.66 | 89.12 | 59.35 | 14.61 | | | | | | |
| | | Additional OCU-DP COCI (data) - in combination per month (2.4-64kbs) | | | UNCDX | 1D1DD | 1.19 | 6.59 | 4.73 | 0.00 | 0.00 | | | | | | |

| UNBUNDLED NETWORK ELEMENTS - South Carolina | | | | | | | | | | | | | | Attachment: 2 | | Exhibit: A | |
|---|---|---|---|---|---|---|---|---|---|---|---|---|---|---|---|---|---|
| CATEGORY | RATE ELEMENTS | Interim | Zone | BCS | USOC | RATES ($) | | | | | Svc Order Submitted Elec per LSR | Svc Order Submitted Manually per LSR | Incremental Charge - Manual Svc Order vs. Electronic-1st | Incremental Charge - Manual Svc Order vs. Electronic-Add'l | Incremental Charge - Manual Svc Order vs. Electronic-Disc 1st | Incremental Charge - Manual Svc Order vs. Electronic-Disc Add'l |
| | | | | | | Rec | Nonrecurring | | Nonrecurring Disconnect | | OSS Rates ($) | | | | | |
| | | | | | | | First | Add'l | First | Add'l | SOMEC | SOMAN | SOMAN | SOMAN | SOMAN | SOMAN |
| | Nonrecurring Currently Combined Network Elements Switch -As-Is Charge | | | UNC1X | UNCCC | | 5.61 | 5.61 | 7.00 | 7.00 | | | | | | |
| | EXTENDED 4-WIRE 64 KBPS EXTENDED DIGITAL LOOP WITH DEDICATED DS1 INTEROFFICE TRANSPORT | | | | | | | | | | | | | | | |
| | First 4-Wire 64Kbps Digital Grade Loop in Combination - Zone 1 | | 1 | UNCDX | UDL64 | 29.93 | 126.66 | 89.12 | 59.35 | 14.61 | | | | | | |
| | First 4-Wire 64Kbps Digital Grade Loop in Combination - Zone 2 | | 2 | UNCDX | UDL64 | 33.99 | 126.66 | 89.12 | 59.35 | 14.61 | | | | | | |
| | First 4-Wire 64Kbps Digital Grade Loop in Combination - Zone 3 | | 3 | UNCDX | UDL64 | 34.74 | 126.66 | 89.12 | 59.35 | 14.61 | | | | | | |
| | Interoffice Transport - Dedicated - DS1 combination - Per Mile Per Month | | | UNC1X | 1L5XX | 0.27 | | | | | | | | | | |
| | interoffice Transport - Dedicated - DS1 combination - Facility Termination Per Month | | | UNC1X | U1TF1 | 61.71 | 89.47 | 81.99 | 16.39 | 14.48 | | | | | | |
| | 1/0 Channel System in combination Per Month | | | UNC1X | MQ1 | 107.57 | 91.24 | 62.71 | 10.56 | 9.81 | | | | | | |
| | OCU-DP COCI (data) - in combination - per month (2.4-64kbs) | | | UNCDX | 1D1DD | 1.19 | 6.59 | 4.73 | 0.00 | 0.00 | | | | | | |
| | Additional 4-Wire 64Kbps Digital Grade Loop in same DS1 Interoffice Transport Combination - Zone 1 | | 1 | UNCDX | UDL64 | 29.93 | 126.66 | 89.12 | 59.35 | 14.61 | | | | | | |
| | Additional 4-Wire 64Kbps Digital Grade Loop in same DS1 Interoffice Transport Combination - Zone 2 | | 2 | UNCDX | UDL64 | 33.99 | 126.66 | 89.12 | 59.35 | 14.61 | | | | | | |
| | Additional 4-Wire 64Kbps Digital Grade Loop in same DS1 Interoffice Transport Combination - Zone 3 | | 3 | UNCDX | UDL64 | 34.74 | 126.66 | 89.12 | 59.35 | 14.61 | | | | | | |
| | Additional OCU-DP COCI (data) - in combination - per month (2.4-64kbs) | | | UNCDX | 1D1DD | 1.19 | 6.59 | 4.73 | 0.00 | 0.00 | | | | | | |
| | Nonrecurring Currently Combined Network Elements Switch -As-Is Charge | | | UNC1X | UNCCC | | 5.61 | 5.61 | 7.00 | 7.00 | | | | | | |
| | EXTENDED 4-WIRE DS1 DIGITAL EXTENDED LOOP WITH DEDICATED DS1 INTEROFFICE TRANSPORT | | | | | | | | | | | | | | | |
| | 4-Wire DS1 Digital Loop in Combination - Zone 1 | | 1 | UNC1X | USLXX | 90.87 | 253.03 | 157.89 | 44.80 | 11.73 | | | | | | |
| | 4-Wire DS1 Digital Loop in Combination - Zone 2 | | 2 | UNC1X | USLXX | 155.43 | 253.03 | 157.89 | 44.80 | 11.73 | | | | | | |
| | 4-Wire DS1 Digital Loop in Combination - Zone 3 | | 3 | UNC1X | USLXX | 261.89 | 253.03 | 157.89 | 44.80 | 11.73 | | | | | | |
| | Interoffice Transport - Dedicated - DS1 combination - Per Mile Per Month | | | UNC1X | 1L5XX | 0.27 | | | | | | | | | | |
| | Interoffice Transport - Dedicated - DS1 combination - Facility Termination Per Month | | | UNC1X | U1TF1 | 61.71 | 89.47 | 81.99 | 16.39 | 14.48 | | | | | | |
| | Nonrecurring Currently Combined Network Elements Switch -As-Is Charge | | | UNC1X | UNCCC | | 5.61 | 5.61 | 7.00 | 7.00 | | | | | | |
| | EXTENDED 4-WIRE DS1 DIGITAL EXTENDED LOOP WITH DEDICATED DS3 INTEROFFICE TRANSPORT | | | | | | | | | | | | | | | |
| | First DS1Loop in Combination - Zone 1 | | 1 | UNC1X | USLXX | 90.87 | 253.03 | 157.89 | 44.80 | 11.73 | | | | | | |
| | First DS1Loop in Combination - Zone 2 | | 2 | UNC1X | USLXX | 155.43 | 253.03 | 157.89 | 44.80 | 11.73 | | | | | | |
| | First DS1Loop in Combination - Zone 3 | | 3 | UNC1X | USLXX | 261.89 | 253.03 | 157.89 | 44.80 | 11.73 | | | | | | |
| | Interoffice Transport - Dedicated - DS3 combination - Per Mile Per Month | | | UNC3X | 1L5XX | 6.42 | | | | | | | | | | |
| | Interoffice Transport - Dedicated - DS3 - Facility Termination per month | | | UNC3X | U1TF3 | 704.52 | 279.37 | 163.12 | 60.33 | 58.59 | | | | | | |
| | 3/1Channel System in combination per month | | | UNC3X | MQ3 | 144.02 | 178.54 | 94.18 | 33.33 | 31.90 | | | | | | |
| | DS1 COCI in combination per month | | | UNC1X | UC1D1 | 8.64 | 6.59 | 4.73 | 0.00 | 0.00 | | | | | | |
| | Additional DS1Loop in DS3 Interoffice Transport Combination - Zone 1 | | 1 | UNC1X | USLXX | 90.87 | 253.03 | 157.89 | 44.80 | 11.73 | | | | | | |
| | Additional DS1Loop in DS3 Interoffice Transport Combination - Zone 2 | | 2 | UNC1X | USLXX | 155.43 | 253.03 | 157.89 | 44.80 | 11.73 | | | | | | |
| | Additional DS1Loop in DS3 Interoffice Transport Combination - Zone 3 | | 3 | UNC1X | USLXX | 261.89 | 253.03 | 157.89 | 44.80 | 11.73 | | | | | | |
| | Additoinal DS1 COCI in combination per month | | | UNC1X | UC1D1 | 8.64 | 6.59 | 4.73 | 0.00 | 0.00 | | | | | | |
| | Nonrecurring Currently Combined Network Elements Switch -As-Is Charge | | | UNC3X | UNCCC | | 5.61 | 5.61 | 7.00 | 7.00 | | | | | | |
| | EXTENDED 4-WIRE VOICE GRADE EXTENDED LOOP/ 4 WIRE VOICE GRADE INTEROFFICE TRANSPORT | | | | | | | | | | | | | | | |
| | 2-WireVG Loop in combination - Zone 1 | | 1 | UNCVX | UEAL2 | 16.68 | 105.98 | 68.43 | 53.05 | 10.61 | | | | | | |
| | 2-WireVG Loop in combination - Zone 2 | | 2 | UNCVX | UEAL2 | 23.13 | 105.98 | 68.43 | 53.05 | 10.61 | | | | | | |
| | 2-WireVG Loop in combination - Zone 3 | | 3 | UNCVX | UEAL2 | 28.46 | 105.98 | 68.43 | 53.05 | 10.61 | | | | | | |

| UNBUNDLED NETWORK ELEMENTS - South Carolina | | | | | | | | | | | | | | Attachment: 2 | | Exhibit: A | |
|---|---|---|---|---|---|---|---|---|---|---|---|---|---|---|---|---|---|
| CATEGORY | | RATE ELEMENTS | Interim | Zone | BCS | USOC | RATES ($) | | | | | Svc Order Submitted Elec per LSR | Svc Order Submitted Manually per LSR | Incremental Charge - Manual Svc Order vs. Electronic-1st | Incremental Charge - Manual Svc Order vs. Electronic-Add'l | Incremental Charge - Manual Svc Order vs. Electronic-Disc 1st | Incremental Charge - Manual Svc Order vs. Electronic-Disc Add'l |
| | | | | | | | Rec | Nonrecurring | | Nonrecurring Disconnect | | OSS Rates ($) | | | | | |
| | | | | | | | | First | Add'l | First | Add'l | SOMEC | SOMAN | SOMAN | SOMAN | SOMAN | SOMAN |
| | | Interoffice Transport - 2-wire VG - Dedicated- Per Mile Per Month | | | UNCVX | 1L5XX | 0.0134 | | | | | | | | | | |
| | | Interoffice Transport - 2-wire VG - Dedicated - Facility Termination per month | | | UNCVX | U1TV2 | 19.44 | 40.63 | 27.47 | 16.77 | 6.91 | | | | | | |
| | | Nonrecurring Currently Combined Network Elements Switch -As-Is Charge | | | UNCVX | UNCCC | | 5.61 | 5.61 | 7.00 | 7.00 | | | | | | |
| | | EXTENDED 4-WIRE VOICE GRADE EXTENDED LOOP/ 4 WIRE VOICE GRADE INTEROFFICE TRANSPORT | | | | | | | | | | | | | | | |
| | | 4-WireVG Loop in combination - Zone 1 | | 1 | UNCVX | UEAL4 | 32.59 | 132.38 | 94.83 | 59.35 | 14.61 | | | | | | |
| | | 4-WireVG Loop in combination - Zone 2 | | 2 | UNCVX | UEAL4 | 43.89 | 132.38 | 94.83 | 59.35 | 14.61 | | | | | | |
| | | 4-WireVG Loop in combination - Zone 3 | | 3 | UNCVX | UEAL4 | 43.38 | 132.38 | 94.83 | 59.35 | 14.61 | | | | | | |
| | | Interoffice Transport - 4-wire VG - Dedicated - Per Mile Per Month | | | UNCVX | 1L5XX | 0.0134 | | | | | | | | | | |
| | | Interoffice Transport - 4-wire VG - Dedicated - Facility Termination per month | | | UNCVX | U1TV4 | 17.03 | 40.63 | 27.47 | 16.77 | 6.91 | | | | | | |
| | | Nonrecurring Currently Combined Network Elements Switch -As-Is Charge | | | UNCVX | UNCCC | | 5.61 | 5.61 | 7.00 | 7.00 | | | | | | |
| | | EXTENDED DS3 DIGITAL EXTENDED LOOP WITH DEDICATED DS3 INTEROFFICE TRANSPORT | | | | | | | | | | | | | | | |
| | | DS3 Local Loop in combination - per mile per month | | | UNC3X | 1L5ND | 12.26 | | | | | | | | | | |
| | | DS3 Local Loop in combination - Facility Termination per month | | | UNC3X | UE3PX | 306.36 | 452.52 | 264.53 | 119.75 | 83.77 | | | | | | |
| | | Interoffice Transport - Dedicated - DS3 - Per Mile per month | | | UNC3X | 1L5XX | 6.42 | | | | | | | | | | |
| | | Interoffice Transport - Dedicated - DS3 combination - Facility Termination per month | | | UNC3X | U1TF3 | 704.52 | 279.37 | 163.12 | 60.33 | 58.59 | | | | | | |
| | | Nonrecurring Currently Combined Network Elements Switch -As-Is Charge | | | UNC3X | UNCCC | | 5.61 | 5.61 | 7.00 | 7.00 | | | | | | |
| | | EXTENDED STS-1 DIGITAL EXTENDED LOOP WITH DEDICATED STS-1 INTEROFFICE TRANSPORT | | | | | | | | | | | | | | | |
| | | STS-1 Local Lolp in combination - per mile per month | | | UNCSX | 1L5ND | 12.26 | | | | | | | | | | |
| | | STS-1 Local Loop in combination - Facility Termination per month | | | UNCSX | UDLS1 | 313.49 | 452.52 | 264.53 | 119.75 | 83.77 | | | | | | |
| | | Interoffice Transport - Dedicated - STS-1 combination - per mile per month | | | UNCSX | 1L5XX | 6.42 | | | | | | | | | | |
| | | Interoffice Transport - Dedicated - STS-1 combination - Facility Termination per month | | | UNCSX | U1TFS | 704.44 | 279.37 | 163.12 | 60.33 | 58.59 | | | | | | |
| | | Nonrecurring Currently Combined Network Elements Switch -As-Is Charge | | | UNCSX | UNCCC | | 5.61 | 5.61 | 7.00 | 7.00 | | | | | | |
| | | EXTENDED 2-WIRE ISDN EXTENDED LOOP WITH DS1 INTEROFFICE TRANSPORT | | | | | | | | | | | | | | | |
| | | First 2-Wire ISDN Loop in Combination - Zone 1 | | 1 | UNCNX | U1L2X | 25.21 | 117.58 | 80.03 | 53.05 | 10.61 | | | | | | |
| | | First 2-Wire ISDN Loop in Combination - Zone 2 | | 2 | UNCNX | U1L2X | 32.76 | 117.58 | 80.03 | 53.05 | 10.61 | | | | | | |
| | | First 2-Wire ISDN Loop in Combination - Zone 3 | | 3 | UNCNX | U1L2X | 37.70 | 117.58 | 80.03 | 53.05 | 10.61 | | | | | | |
| | | Interoffice Transport - Dedicated - DS1 combination - per mile per month | | | UNC1X | 1L5XX | 0.27 | | | | | | | | | | |
| | | Interoffice Transport - Dedicated - DS1 combination - Facility Termination per month | | | UNC1X | U1TF1 | 61.71 | 89.47 | 81.99 | 16.39 | 14.48 | | | | | | |
| | | 1/0 Channel System in combination - per month | | | UNC1X | MQ1 | 107.57 | 91.24 | 62.71 | 10.56 | 9.81 | | | | | | |
| | | 2-wire ISDN COCI (BRITE) - in combination - per month | | | UNCNX | UC1CA | 2.56 | 6.59 | 4.73 | 0.00 | 0.00 | | | | | | |
| | | Additional 2-wire ISDN Loop in same DS1Interoffice Transport Combination - Zone 1 | | 1 | UNCNX | U1L2X | 25.21 | 117.58 | 80.03 | 53.05 | 10.61 | | | | | | |
| | | Additional 2-wire ISDN Loop in same DS1Interoffice Transport Combination - Zone 2 | | 2 | UNCNX | U1L2X | 32.76 | 117.58 | 80.03 | 53.05 | 10.61 | | | | | | |
| | | Additional 2-wire ISDN Loop in same DS1Interoffice Transport Combination - Zone 3 | | 3 | UNCNX | U1L2X | 37.70 | 117.58 | 80.03 | 53.05 | 10.61 | | | | | | |
| | | Additional 2-wire ISDN COCI (BRITE) - in combination- per month | | | UNCNX | UC1CA | 2.56 | 6.59 | 4.73 | 0.00 | 0.00 | | | | | | |
| | | Nonrecurring Currently Combined Network Elements Switch -As-Is Charge | | | UNC1X | UNCCC | | 5.61 | 5.61 | 7.00 | 7.00 | | | | | | |
| | | EXTENDED 4-WIRE DS1 DIGITAL EXTENDED LOOP WITH DEDICATED STS-1 INTEROFFICE TRANSPORT | | | | | | | | | | | | | | | |
| | | First DS1 Loop Combination - Zone 1 | | 1 | UNC1X | USLXX | 90.87 | 253.03 | 157.89 | 44.80 | 11.73 | | | | | | |
| | | First DS1 Loop Combination - Zone 2 | | 2 | UNC1X | USLXX | 155.43 | 253.03 | 157.89 | 44.80 | 11.73 | | | | | | |
| | | First DS1 Loop Combination - Zone 3 | | 3 | UNC1X | USLXX | 261.89 | 253.03 | 157.89 | 44.80 | 11.73 | | | | | | |

| UNBUNDLED NETWORK ELEMENTS - South Carolina | | | | | | | | | | | | | | Attachment: 2 | | Exhibit: A | |
|---|---|---|---|---|---|---|---|---|---|---|---|---|---|---|---|---|---|
| CATEGORY | | RATE ELEMENTS | Interim | Zone | BCS | USOC | RATES ($) | | | | | Svc Order Submitted Elec per LSR | Svc Order Submitted Manually per LSR | Incremental Charge - Manual Svc Order vs. Electronic-1st | Incremental Charge - Manual Svc Order vs. Electronic-Add'l | Incremental Charge - Manual Svc Order vs. Electronic-Disc 1st | Incremental Charge - Manual Svc Order vs. Electronic-Disc Add'l |
| | | | | | | | Rec | Nonrecurring | | Nonrecurring Disconnect | | OSS Rates ($) | | | | | |
| | | | | | | | | First | Add'l | First | Add'l | SOMEC | SOMAN | SOMAN | SOMAN | SOMAN | SOMAN |
| | | Interoffice Transport - Dedicated - STS-1 combination - Per Mile Per Month | | | UNCSX | 1L5XX | 6.42 | | | | | | | | | | |
| | | Interoffice Transport - Dedicated - STS-1 combination - Facility Termination per month | | | UNCSX | U1TFS | 704.44 | 279.37 | 163.12 | 60.33 | 58.59 | | | | | | |
| | | 3/1 Channel System in combination per month | | | UNCSX | MQ3 | 144.02 | 178.54 | 94.18 | 33.33 | 31.90 | | | | | | |
| | | DS1 COCI in combination per month | | | UNC1X | UC1D1 | 8.64 | 6.59 | 4.73 | 0.00 | 0.00 | | | | | | |
| | | Additional DS1Loop in the same STS-1 Interoffice Transport Combination - Zone 1 | | 1 | UNC1X | USLXX | 90.87 | 253.03 | 157.89 | 44.80 | 11.73 | | | | | | |
| | | Additional DS1Loop in the same STS-1 Interoffice Transport Combination - Zone 2 | | 2 | UNC1X | USLXX | 155.43 | 253.03 | 157.89 | 44.80 | 11.73 | | | | | | |
| | | Additional DS1Loop in the same STS-1 Interoffice Transport Combination - Zone 3 | | 3 | UNC1X | USLXX | 261.89 | 253.03 | 157.89 | 44.80 | 11.73 | | | | | | |
| | | DS1 COCI in combination per month | | | UNC1X | UC1D1 | 8.64 | 6.59 | 4.73 | 0.00 | 0.00 | | | | | | |
| | | Nonrecurring Currently Combined Network Elements Switch -As-Is Charge | | | UNCSX | UNCCC | | 5.61 | 5.61 | 7.00 | 7.00 | | | | | | |
| | | **EXTENDED 4-WIRE 56 KBPS DIGITAL EXTENDED LOOP WITH 56 KBPS INTEROFFICE TRANSPORT** | | | | | | | | | | | | | | | |
| | | 4-wire 56 kbps Local Loop in combination - Zone 1 | | 1 | UNCDX | UDL56 | 29.93 | 126.66 | 89.12 | 59.35 | 14.61 | | | | | | |
| | | 4-wire 56 kbps Local Loop in combination - Zone 2 | | 2 | UNCDX | UDL56 | 33.99 | 126.66 | 89.12 | 59.35 | 14.61 | | | | | | |
| | | 4-wire 56 kbps Local Loop in combination - Zone 3 | | 3 | UNCDX | UDL56 | 34.74 | 126.66 | 89.12 | 59.35 | 14.61 | | | | | | |
| | | Interoffice Transport - Dedicated - 4-wire 56 kbps combination - Per Mile per month | | | UNCDX | 1L5XX | 0.0134 | | | | | | | | | | |
| | | Interoffice Transport - Dedicated - 4-wire 56 kbps combination - Facility Termination per month | | | UNCDX | U1TD5 | 13.41 | 40.63 | 27.47 | 16.77 | 6.91 | | | | | | |
| | | Nonrecurring Currently Combined Network Elements Switch -As-Is Charge | | | UNCDX | UNCCC | | 5.61 | 5.61 | 7.00 | 7.00 | | | | | | |
| | | **EXTENDED 4-WIRE 64 KBPS DIGITAL EXTENDED LOOP WITH 64 KBPS INTEROFFICE TRANSPORT** | | | | | | | | | | | | | | | |
| | | 4-wire 64 kbps Lcoal Loop in Combination - Zone 1 | | 1 | UNCDX | UDL64 | 29.93 | 126.66 | 89.12 | 59.35 | 14.61 | | | | | | |
| | | 4-wire 64 kbps Lcoal Loop in Combination - Zone 2 | | 2 | UNCDX | UDL64 | 33.99 | 126.66 | 89.12 | 59.35 | 14.61 | | | | | | |
| | | 4-wire 64 kbps Lcoal Loop in Combination - Zone 3 | | 3 | UNCDX | UDL64 | 34.74 | 126.66 | 89.12 | 59.35 | 14.61 | | | | | | |
| | | Interoffice Transport - Dedicated - 4-wire 64 kbps combination - Per Mile per month | | | UNCDX | 1L5XX | 0.0134 | | | | | | | | | | |
| | | Interoffice Transport - Dedicated - 4-wire 64 kbps combination - Facility Termination per month | | | UNCDX | U1TD6 | 13.41 | 40.63 | 27.47 | 16.77 | 6.91 | | | | | | |
| | | Nonrecurring Currently Combined Network Elements Switch -As-Is Charge | | | UNCDX | UNCCC | | 5.61 | 5.61 | 7.00 | 7.00 | | | | | | |
| | | **EXTENDED 2-WIRE VOICE GRADE LOOP WITH DS1 INTEROFFICE TRANSPORT w/ 3/1 MUX** | | | | | | | | | | | | | | | |
| | | First 2-wire VG Loop (SL2) in Combination - Zone 1 | | 1 | UNCVX | UEAL2 | 16.68 | 105.98 | 68.43 | 53.05 | 10.61 | | | | | | |
| | | First 2-wire VG Loop (SL2) in Combination - Zone 2 | | 2 | UNCVX | UEAL2 | 23.13 | 105.98 | 68.43 | 53.05 | 10.61 | | | | | | |
| | | First 2-wire VG Loop (SL2) in Combination - Zone 3 | | 3 | UNCVX | UEAL2 | 28.46 | 105.98 | 68.43 | 53.05 | 10.61 | | | | | | |
| | | First Interoffice Transport - Dedicated - DS1 combination - Per Mile | | | UNC1X | 1L5XX | 0.27 | | | | | | | | | | |
| | | First Interoffice Transport - Dedicated - DS1 combination - Facility Termination per month | | | UNC1X | U1TF1 | 61.71 | 89.47 | 81.99 | 16.39 | 14.48 | | | | | | |
| | | Per each DS1 Channelization System Per Month | | | UNC1X | MQ1 | 107.57 | 91.24 | 62.71 | 10.56 | 9.81 | | | | | | |
| | | Per each Voice Grade COCI - Per Month per month | | | UNCVX | 1D1VG | 0.56 | 6.59 | 4.73 | 0.00 | 0.00 | | | | | | |
| | | 3/1 Channel System in combination per month | | | UNC3X | MQ3 | 144.02 | 178.54 | 94.18 | 33.33 | 31.90 | | | | | | |
| | | Per each DS1 COCI in combination per month | | | UNC1X | UC1D1 | 8.64 | 6.59 | 4.73 | 0.00 | 0.00 | | | | | | |
| | | Each Additional 2-Wire VG Loop(SL 2) in the same DS1 Interoffice Transport Combination - Zone 1 | | 1 | UNCVX | UEAL2 | 16.68 | 105.98 | 68.43 | 53.05 | 10.61 | | | | | | |
| | | Each Additional 2-Wire VG Loop(SL2) in the same DS1 Interoffice Transport Combination - Zone 2 | | 2 | UNCVX | UEAL2 | 23.13 | 105.98 | 68.43 | 53.05 | 10.61 | | | | | | |
| | | Each Additional 2-Wire VG Loop(SL2) in the same DS1 Interoffice Transport Combination - Zone 3 | | 3 | UNCVX | UEAL2 | 28.46 | 105.98 | 68.43 | 53.05 | 10.61 | | | | | | |
| | | Each Additional Voice Grade COCI in combination - per month | | | UNCVX | 1D1VG | 0.56 | 6.59 | 4.73 | 0.00 | 0.00 | | | | | | |
| | | Each Additional DS1 Interoffice Channel per mile in same 3/1 Channel System per month | | | UNC1X | 1L5XX | 0.27 | | | | | | | | | | |
| | | Each Additional DS1 Interoffice Channel Facility Termination in same 3/1 Channel System per month | | | UNC1X | U1TF1 | 61.71 | 89.47 | 81.99 | 16.39 | 14.48 | | | | | | |
| | | Each Additional DS1 COCI combination per month | | | UNC1X | UC1D1 | 8.64 | 6.59 | 4.73 | 0.00 | 0.00 | | | | | | |

| UNBUNDLED NETWORK ELEMENTS - South Carolina | | | | | | | | | | | | | | Attachment: 2 | | Exhibit: A | |
|---|---|---|---|---|---|---|---|---|---|---|---|---|---|---|---|---|---|
| CATEGORY | | RATE ELEMENTS | Interim | Zone | BCS | USOC | RATES ($) | | | | | Svc Order Submitted Elec per LSR | Svc Order Submitted Manually per LSR | Incremental Charge - Manual Svc Order vs. Electronic-1st | Incremental Charge - Manual Svc Order vs. Electronic-Add'l | Incremental Charge - Manual Svc Order vs. Electronic-Disc 1st | Incremental Charge - Manual Svc Order vs. Electronic-Disc Add'l |
| | | | | | | | Rec | Nonrecurring | | Nonrecurring Disconnect | | OSS Rates ($) | | | | | |
| | | | | | | | | First | Add'l | First | Add'l | SOMEC | SOMAN | SOMAN | SOMAN | SOMAN | SOMAN |
| | | Nonrecurring Currently Combined Network Elements Switch -As-Is Charge | | | UNC1X | UNCCC | | 5.61 | 5.61 | 7.00 | 7.00 | | | | | | |
| | | EXTENDED 4-WIRE 56 KBPS DIGITAL LOOP WITH DEDICATED DS1 INTEROFFICE TRANSPORT w/ 3/1 MUX | | | | | | | | | | | | | | | |
| | | First 4-Wire Analog Voice Grade Local Loop in Combination - Zone 1 | | 1 | UNCVX | UEAL4 | 32.59 | 132.38 | 94.83 | 59.35 | 14.61 | | | | | | |
| | | First 4-Wire Analog Voice Grade Local Loop in Combination - Zone 2 | | 2 | UNCVX | UEAL4 | 43.89 | 132.38 | 94.83 | 59.35 | 14.61 | | | | | | |
| | | First 4-Wire Analog Voice Grade Local Loop in Combination - Zone 3 | | 3 | UNCVX | UEAL4 | 43.38 | 132.38 | 94.83 | 59.35 | 14.61 | | | | | | |
| | | First Interoffice Transport - Dedicated - DS1 combination - Per Mile Per Month | | | UNC1X | 1L5XX | 0.27 | | | | | | | | | | |
| | | First Interoffice Transport - Dedicated - DS1 - Facility Termination Per Month | | | UNC1X | U1TF1 | 61.71 | 89.47 | 81.99 | 16.39 | 14.48 | | | | | | |
| | | Per each 1/0 Channel System in combination Per Month | | | UNC1X | MQ1 | 107.57 | 91.24 | 62.71 | 10.56 | 9.81 | | | | | | |
| | | Per each Voice Grade COCI in combination - per month | | | UNCVX | 1D1VG | 0.56 | 6.59 | 4.73 | 0.00 | 0.00 | | | | | | |
| | | 3/1 Channel System in combination per month | | | UNC3X | MQ3 | 144.02 | 178.54 | 94.18 | 33.33 | 31.90 | | | | | | |
| | | Per each DS1 COCI in combination per month | | | UNC1X | UC1D1 | 8.64 | 6.59 | 4.73 | 0.00 | 0.00 | | | | | | |
| | | Additional 4-Wire Analog Voice Grade Loop in same DS1 Interoffice Transport Combination - Zone 1 | | 1 | UNCVX | UEAL4 | 32.59 | 132.38 | 94.83 | 59.35 | 14.61 | | | | | | |
| | | Additional 4-Wire Analog Voice Grade Loop in same DS1 Interoffice Transport Combination - Zone 2 | | 2 | UNCVX | UEAL4 | 43.89 | 132.38 | 94.83 | 59.35 | 14.61 | | | | | | |
| | | Additional 4-Wire Analog Voice Grade Loop in same DS1 Interoffice Transport Combination - Zone 3 | | 3 | UNCVX | UEAL4 | 43.38 | 132.38 | 94.83 | 59.35 | 14.61 | | | | | | |
| | | Each Additional DS1 Interoffice Channel per mile in same 3/1 Channel System per month | | | UNC1X | 1L5XX | 0.27 | | | | | | | | | | |
| | | Each Additional DS1 Interoffice Channel Facility Termination in same 3/1 Channel System per month | | | UNC1X | U1TF1 | 61.71 | 89.47 | 81.99 | 16.39 | 14.48 | | | | | | |
| | | Additional Voice Grade COCI - in combination - per month | | | UNCVX | 1D1VG | 0.56 | 6.59 | 4.73 | 0.00 | 0.00 | | | | | | |
| | | Nonrecurring Currently Combined Network Elements Switch -As-Is Charge | | | UNC1X | UNCCC | | 5.61 | 5.61 | 7.00 | 7.00 | | | | | | |
| | | EXTENDED 4-WIRE 56 KBPS DIGITAL LOOP WITH DEDICATED DS1 INTEROFFICE TRANSPORT w/ 3/1 MUX | | | | | | | | | | | | | | | |
| | | First 4-Wire 56Kbps Digital Grade Local Loop in Combination - Zone 1 | | 1 | UNCDX | UDL56 | 29.93 | 126.66 | 89.12 | 59.35 | 14.61 | | | | | | |
| | | First 4-Wire 56Kbps Digital Grade Local Loop in Combination - Zone 2 | | 2 | UNCDX | UDL56 | 33.99 | 126.66 | 89.12 | 59.35 | 14.61 | | | | | | |
| | | First 4-Wire 56Kbps Digital Grade Local Loop in Combination - Zone 3 | | 3 | UNCDX | UDL56 | 34.74 | 126.66 | 89.12 | 59.35 | 14.61 | | | | | | |
| | | First Interoffice Transport - Dedicated - DS1 combination - Per Mile Per Month | | | UNC1X | 1L5XX | 0.27 | | | | | | | | | | |
| | | First Interoffice Transport - Dedicated - DS1 - combination Facility Termination Per Month | | | UNC1X | U1TF1 | 61.71 | 89.47 | 81.99 | 16.39 | 14.48 | | | | | | |
| | | Per each 1/0 Channel System in combination Per Month | | | UNC1X | MQ1 | 107.57 | 91.24 | 62.71 | 10.56 | 9.81 | | | | | | |
| | | Per each OCU-DP COCI (data) COCI per month (2.4-64kbs) | | | UNCDX | 1D1DD | 1.19 | 6.59 | 4.73 | 0.00 | 0.00 | | | | | | |
| | | 3/1 Channel System in combination per month | | | UNC3X | MQ3 | 144.02 | 178.54 | 94.18 | 33.33 | 31.90 | | | | | | |
| | | Per each DS1 COCI in combination per month | | | UNC1X | UC1D1 | 8.64 | 6.59 | 4.73 | 0.00 | 0.00 | | | | | | |
| | | Additional 4-Wire 56Kbps Digital Grade Loop in same DS1 Interoffice Transport Combination - Zone 1 | | 1 | UNCDX | UDL56 | 29.93 | 126.66 | 89.12 | 59.35 | 14.61 | | | | | | |
| | | Additional 4-Wire 56Kbps Digital Grade Loop in same DS1 Interoffice Transport Combination - Zone 2 | | 2 | UNCDX | UDL56 | 33.99 | 126.66 | 89.12 | 59.35 | 14.61 | | | | | | |
| | | Additional 4-Wire 56Kbps Digital Grade Loop in same DS1 Interoffice Transport Combination - Zone 3 | | 3 | UNCDX | UDL56 | 34.74 | 126.66 | 89.12 | 59.35 | 14.61 | | | | | | |
| | | OCU-DP COCI (data) COCI in combination per month (2.4-64kbs) | | | UNCDX | 1D1DD | 1.19 | 6.59 | 4.73 | 0.00 | 0.00 | | | | | | |
| | | Each Additional DS1 Interoffice Channel per mile in same 3/1 Channel System per month | | | UNC1X | 1L5XX | 0.27 | | | | | | | | | | |
| | | Each Additional DS1 Interoffice Channel Facility Termination in same 3/1 Channel System per month | | | UNC1X | U1TF1 | 61.71 | 89.47 | 81.99 | 16.39 | 14.48 | | | | | | |
| | | Each Additional DS1 COCI in the same 3/1 channel system combination per month | | | UNC1X | UC1D1 | 8.64 | 6.59 | 4.73 | 0.00 | 0.00 | | | | | | |

| UNBUNDLED NETWORK ELEMENTS - South Carolina | | | | | | | | | | | | | | Attachment: 2 | | Exhibit: A | |
|---|---|---|---|---|---|---|---|---|---|---|---|---|---|---|---|---|---|
| CATEGORY | | RATE ELEMENTS | Interim | Zone | BCS | USOC | RATES ($) | | | | | Svc Order Submitted Elec per LSR | Svc Order Submitted Manually per LSR | Incremental Charge - Manual Svc Order vs. Electronic-1st | Incremental Charge - Manual Svc Order vs. Electronic-Add'l | Incremental Charge - Manual Svc Order vs. Electronic-Disc 1st | Incremental Charge - Manual Svc Order vs. Electronic-Disc Add'l |
| | | | | | | | Rec | Nonrecurring | | Nonrecurring Disconnect | | OSS Rates ($) | | | | | |
| | | | | | | | | First | Add'l | First | Add'l | SOMEC | SOMAN | SOMAN | SOMAN | SOMAN | SOMAN |
| | | Nonrecurring Currently Combined Network Elements Switch -As-Is Charge | | | UNC1X | UNCCC | | 5.61 | 5.61 | 7.00 | 7.00 | | | | | | |
| | EXTENDED 4-WIRE 64 KBPS DIGITAL LOOP WITH DEDICATED DS1 INTEROFFICE TRANSPORT w/ 3/1 MUX | | | | | | | | | | | | | | | | |
| | | First 4-Wire 64Kbps Digital Grade Loop in a DS1 Interoffice Transport Combination - Zone 1 | | 1 | UNCDX | UDL64 | 29.93 | 126.66 | 89.12 | 59.35 | 14.61 | | | | | | |
| | | First 4-Wire 64Kbps Digital Grade Loop in a DS1 Interoffice Transport Combination - Zone 2 | | 2 | UNCDX | UDL64 | 33.99 | 126.66 | 89.12 | 59.35 | 14.61 | | | | | | |
| | | First 4-Wire 64Kbps Digital Grade Loop in a DS1 Interoffice Transport Combination - Zone 3 | | 3 | UNCDX | UDL64 | 34.74 | 126.66 | 89.12 | 59.35 | 14.61 | | | | | | |
| | | First Interoffice Transport - Dedicated - DS1 combination - Per Mile Per Month | | | UNC1X | 1L5XX | 0.27 | | | | | | | | | | |
| | | First Interoffice Transport - Dedicated - DS1 combination - Facility Termination Per Month | | | UNC1X | U1TF1 | 61.71 | 89.47 | 81.99 | 16.39 | 14.48 | | | | | | |
| | | Per each Channel System 1/0 in combination Per Month | | | UNC1X | MQ1 | 107.57 | 91.24 | 62.71 | 10.56 | 9.81 | | | | | | |
| | | Per each OCU-DP COCI (data) in combination - per month (2.4-64kbs) | | | UNCDX | 1D1DD | 1.19 | 6.59 | 4.73 | 0.00 | 0.00 | | | | | | |
| | | 3/1 Channel System in combination per month | | | UNC3X | MQ3 | 144.02 | 178.54 | 94.18 | 33.33 | 31.90 | | | | | | |
| | | Per each DS1 COCI in combination per month | | | UNC1X | UC1D1 | 8.64 | 6.59 | 4.73 | 0.00 | 0.00 | | | | | | |
| | | Additional 4-Wire 64Kbps Digital Grade Loop in same DS1 Interoffice Transport Combination - Zone 1 | | 1 | UNCDX | UDL64 | 29.93 | 126.66 | 89.12 | 59.35 | 14.61 | | | | | | |
| | | Additional 4-Wire 64Kbps Digital Grade Loop in same DS1 Interoffice Transport Combination - Zone 2 | | 2 | UNCDX | UDL64 | 33.99 | 126.66 | 89.12 | 59.35 | 14.61 | | | | | | |
| | | Additional 4-Wire 64Kbps Digital Grade Loop in same DS1 Interoffice Transport Combination - Zone 3 | | 3 | UNCDX | UDL64 | 34.74 | 126.66 | 89.12 | 59.35 | 14.61 | | | | | | |
| | | Additional OCU-DP COCI (data) - DS1 to DS0 Channel System combination - per month (2.4-64kbs) | | | UNCDX | 1D1DD | 1.19 | 6.59 | 4.73 | 0.00 | 0.00 | | | | | | |
| | | Each Additional DS1 Interoffice Channel per mile in same 3/1 Channel System per month | | | UNC1X | 1L5XX | 0.27 | | | | | | | | | | |
| | | Each Additional DS1 Interoffice Channel Facility Termination in same 3/1 Channel System per month | | | UNC1X | U1TF1 | 61.71 | 89.47 | 81.99 | 16.39 | 14.48 | | | | | | |
| | | Each Additional DS1 COCI in the same 3/1 channel system combination per month | | | UNC1X | UC1D1 | 8.64 | 6.59 | 4.73 | 0.00 | 0.00 | | | | | | |
| | | Nonrecurring Currently Combined Network Elements Switch -As-Is Charge | | | UNC1X | UNCCC | | 5.61 | 5.61 | 7.00 | 7.00 | | | | | | |
| | EXTENDED 2-WIRE ISDN LOOP WITH DS1 INTEROFFICE TRANSPORT w/ 3/1 MUX | | | | | | | | | | | | | | | | |
| | | First 2-Wire ISDN Loop in a DS1 Interoffice Combination Transport - Zone 1 | | 1 | UNCNX | U1L2X | 25.21 | 117.58 | 80.03 | 53.05 | 10.61 | | | | | | |
| | | First 2-Wire ISDN Loop in a DS1 Interoffice Combination Transport - Zone 2 | | 2 | UNCNX | U1L2X | 32.76 | 117.58 | 80.03 | 53.05 | 10.61 | | | | | | |
| | | First 2-Wire ISDN Loop in a DS1 Interoffice Combination Transport - Zone 3 | | 3 | UNCNX | U1L2X | 37.70 | 117.58 | 80.03 | 53.05 | 10.61 | | | | | | |
| | | First Interoffice Transport - Dedicated - DS1 combination - Per Mile per month | | | UNC1X | 1L5XX | 0.27 | | | | | | | | | | |
| | | First Interoffice Transport - Dedicated - DS1 combination - Facility Termination per month | | | UNC1X | U1TF1 | 61.71 | 89.47 | 81.99 | 16.39 | 14.48 | | | | | | |
| | | Per each Channel System 1/0 in combination - per month | | | UNC1X | MQ1 | 107.57 | 91.24 | 62.71 | 10.56 | 9.81 | | | | | | |
| | | Per each 2-wire ISDN COCI (BRITE) in combination - per month | | | UNCNX | UC1CA | 2.56 | 6.59 | 4.73 | 0.00 | 0.00 | | | | | | |
| | | 3/1 Channel System in combination per month | | | UNC3X | MQ3 | 144.02 | 178.54 | 94.18 | 33.33 | 31.90 | | | | | | |
| | | Per each DS1 COCI in combination per month | | | UNC1X | UC1D1 | 8.64 | 6.59 | 4.73 | 0.00 | 0.00 | | | | | | |
| | | Additional 2-wire ISDN Loop in same DS1Interoffice Transport Combination - Zone 1 | | 1 | UNCNX | U1L2X | 25.21 | 117.58 | 80.03 | 53.05 | 10.61 | | | | | | |
| | | Additional 2-wire ISDN Loop in same DS1Interoffice Transport Combination - Zone 2 | | 2 | UNCNX | U1L2X | 32.76 | 117.58 | 80.03 | 53.05 | 10.61 | | | | | | |
| | | Additional 2-wire ISDN Loop in same DS1Interoffice Transport Combination - Zone 3 | | 3 | UNCNX | U1L2X | 37.70 | 117.58 | 80.03 | 53.05 | 10.61 | | | | | | |
| | | Additional 2-wire ISDN COCI (BRITE) in same 1/0 channel system combination- per month | | | UNCNX | UC1CA | 2.56 | 6.59 | 4.73 | 0.00 | 0.00 | | | | | | |

| UNBUNDLED NETWORK ELEMENTS - South Carolina | | | | | | | | | | | | | | Attachment: 2 | | Exhibit: A | |
|---|---|---|---|---|---|---|---|---|---|---|---|---|---|---|---|---|---|
| CATEGORY | | RATE ELEMENTS | Interim | Zone | BCS | USOC | RATES ($) | | | | | Svc Order Submitted Elec per LSR | Svc Order Submitted Manually per LSR | Incremental Charge - Manual Svc Order vs. Electronic-1st | Incremental Charge - Manual Svc Order vs. Electronic-Add'l | Incremental Charge - Manual Svc Order vs. Electronic-Disc 1st | Incremental Charge - Manual Svc Order vs. Electronic-Disc Add'l |
| | | | | | | | Rec | Nonrecurring | | Nonrecurring Disconnect | | OSS Rates ($) | | | | | |
| | | | | | | | | First | Add'l | First | Add'l | SOMEC | SOMAN | SOMAN | SOMAN | SOMAN | SOMAN |
| | | Each Additional DS1 Interoffice Channel per mile in same 3/1 Channel System per month | | | UNC1X | 1L5XX | 0.27 | | | | | | | | | | |
| | | Each Additional DS1 Interoffice Channel Facility Termination in same 3/1 Channel System per month | | | UNC1X | U1TF1 | 61.71 | 89.47 | 81.99 | 16.39 | 14.48 | | | | | | |
| | | Each Additional DS1 COCI in the same 3/1 channel system combination per month | | | UNC1X | UC1D1 | 8.64 | 6.59 | 4.73 | 0.00 | 0.00 | | | | | | |
| | | Nonrecurring Currently Combined Network Elements Switch -As-Is Charge | | | UNC1X | UNCCC | | 5.61 | 5.61 | 7.00 | 7.00 | | | | | | |
| | EXTENDED 4-WIRE DS1 LOOP WITH DEDICATED DS1 INTEROFFICE TRANSPORT w/ 3/1 MUX | | | | | | | | | | | | | | | | |
| | | First 4-wire DS1 Digital Lcoal Loop in Combination - Zone 1 | | 1 | UNC1X | USLXX | 90.87 | 253.03 | 157.89 | 44.80 | 11.73 | | | | | | |
| | | First 4-wire DS1 Digital Lcoal Loop in Combination - Zone 2 | | 2 | UNC1X | USLXX | 155.43 | 253.03 | 157.89 | 44.80 | 11.73 | | | | | | |
| | | First 4-wire DS1 Digital Lcoal Loop in Combination - Zone 3 | | 3 | UNC1X | USLXX | 261.89 | 253.03 | 157.89 | 44.80 | 11.73 | | | | | | |
| | | First Interoffice Transport - Dedicated - DS1 combination - Per Mile Per Month | | | UNC1X | 1L5XX | 0.27 | | | | | | | | | | |
| | | First Interoffice Transport - Dedicated - DS1 combination - Facility Termination Per Month | | | UNC1X | U1TF1 | 61.71 | 89.47 | 81.99 | 16.39 | 14.48 | | | | | | |
| | | 3/1 Channel System in combination per month | | | UNC3X | MQ3 | 144.02 | 178.54 | 94.18 | 33.33 | 31.90 | | | | | | |
| | | Per each DS1 COCI combination per month | | | UNC1X | UC1D1 | 8.64 | 6.59 | 4.73 | 0.00 | 0.00 | | | | | | |
| | | Each Additional DS1 Interoffice Channel per mile in same 3/1 Channel System per month | | | UNC1X | 1L5XX | 0.27 | | | | | | | | | | |
| | | Each Additional DS1 Interoffice Channel Facility Termination in same 3/1 Channel System per month | | | UNC1X | U1TF1 | 61.71 | 89.47 | 81.99 | 16.39 | 14.48 | | | | | | |
| | | Each Additional DS1 COCI in the same 3/1 channel system combination per month | | | UNC1X | UC1D1 | 8.64 | 6.59 | 4.73 | 0.00 | 0.00 | | | | | | |
| | | Additional 4-Wire DS1 Digital Local Loop in Combination - Zone 1 | | 1 | UNC1X | USLXX | 90.87 | 253.03 | 157.89 | 44.80 | 11.73 | | | | | | |
| | | Additional 4-Wire DS1 Digital Local Loop in Combination - Zone 2 | | 2 | UNC1X | USLXX | 155.43 | 253.03 | 157.89 | 44.80 | 11.73 | | | | | | |
| | | Additional 4-Wire DS1 Digital Local Loop in Combination - Zone 3 | | 3 | UNC1X | USLXX | 261.89 | 253.03 | 157.89 | 44.80 | 11.73 | | | | | | |
| | | Nonrecurring Currently Combined Network Elements Switch -As-Is Charge | | | UNC1X | UNCCC | | 5.61 | 5.61 | 7.00 | 7.00 | | | | | | |
| | EXTENDED 4-WIRE 56 KBPS DIGITAL EXTENDED LOOP WITH DS0 INTEROFFICE TRANSPORT | | | | | | | | | | | | | | | | |
| | | First 4-wire 56 kbps Local Loop in combination - Zone 1 | | 1 | UNCDX | UDL56 | 29.93 | 126.66 | 89.12 | 59.35 | 14.61 | | | | | | |
| | | First 4-wire 56 kbps Local Loop in combination - Zone 2 | | 2 | UNCDX | UDL56 | 33.99 | 126.66 | 89.12 | 59.35 | 14.61 | | | | | | |
| | | First 4-wire 56 kbps Local Loop in combination - Zone 3 | | 3 | UNCDX | UDL56 | 34.74 | 126.66 | 89.12 | 59.35 | 14.61 | | | | | | |
| | | First 4-wiree 56 kbps Interoffice Transport - Dedicated - Per Mile per month | | | UNCDX | 1L5XX | 0.0134 | | | | | | | | | | |
| | | First 4-wire 56 kbps Interoffice Transport - Dedicated - Facility Termination per month | | | UNCDX | U1TD5 | 13.41 | 40.63 | 27.47 | 16.77 | 6.91 | | | | | | |
| | | Nonrecurring Currently Combined Network Elements Switch -As-Is Charge | | | UNCDX | UNCCC | | 5.61 | 5.61 | 7.00 | 7.00 | | | | | | |
| | EXTENDED 4-WIRE 64 KBPS DIGITAL EXTENDED LOOP WITH DS0 INTEROFFICE TRANSPORT | | | | | | | | | | | | | | | | |
| | | First 4-wire 64 kbps Local Loop in combination - Zone 1 | | 1 | UNCDX | UDL64 | 29.93 | 126.66 | 89.12 | 59.35 | 14.61 | | | | | | |
| | | First 4-wire 64 kbps Local Loop in combination - Zone 2 | | 2 | UNCDX | UDL64 | 33.99 | 126.66 | 89.12 | 59.35 | 14.61 | | | | | | |
| | | First 4-wire 64 kbps Local Loop in combination - Zone 3 | | 3 | UNCDX | UDL64 | 34.74 | 126.66 | 89.12 | 59.35 | 14.61 | | | | | | |
| | | First l4-wire 65 kbps Interoffice Transport - Dedicated - Per Mile per month | | | UNCDX | 1L5XX | 0.0134 | | | | | | | | | | |
| | | First 4-wire 64 kbps Interoffice Transport - Dedicated - Facility Termination per month | | | UNCDX | U1TD6 | 13.41 | 40.63 | 27.47 | 16.77 | 6.91 | | | | | | |
| | | Nonrecurring Currently Combined Network Elements Switch -As-Is Charge | | | UNCDX | UNCCC | | 5.61 | 5.61 | 7.00 | 7.00 | | | | | | |
| ADDITIONAL NETWORK ELEMENTS | | | | | | | | | | | | | | | | | |
| | When used as a part of a currently combined facility, the non-recurrng charges do not apply, but a Switch As Is charge does apply. | | | | | | | | | | | | | | | | |
| | When used as ordinarily combined network elements in All States, the non-recurring charges apply and the Switch As Is Charge does not. | | | | | | | | | | | | | | | | |
| | Nonrecurring Currently Combined Network Elements "Switch As Is" Charge (One applies to each combination) | | | | | | | | | | | | | | | | |
| | | Nonrecurring Currently Combined Network Elements Switch -As-Is Charge - 2 wire/4-Wire VG | | | UNCVX | UNCCC | | 5.61 | 5.61 | 7.00 | 7.00 | | | | | | |

| UNBUNDLED NETWORK ELEMENTS - South Carolina | | | | | | | | | | | | | | Attachment: 2 | | Exhibit: A | |
|---|---|---|---|---|---|---|---|---|---|---|---|---|---|---|---|---|---|
| CATEGORY | | RATE ELEMENTS | Interim | Zone | BCS | USOC | RATES ($) | | | | | Svc Order Submitted Elec per LSR | Svc Order Submitted Manually per LSR | Incremental Charge - Manual Svc Order vs. Electronic-1st | Incremental Charge - Manual Svc Order vs. Electronic-Add'l | Incremental Charge - Manual Svc Order vs. Electronic-Disc 1st | Incremental Charge - Manual Svc Order vs. Electronic-Disc Add'l |
| | | | | | | | Rec | Nonrecurring | | Nonrecurring Disconnect | | OSS Rates ($) | | | | | |
| | | | | | | | | First | Add'l | First | Add'l | SOMEC | SOMAN | SOMAN | SOMAN | SOMAN | SOMAN |
| | | Nonrecurring Currently Combined Network Elements Switch -As-Is Charge - 56/64 kbps | | | UNCDX | UNCCC | | 5.61 | 5.61 | 7.00 | 7.00 | | | | | | |
| | | Nonrecurring Currently Combined Network Elements Switch -As-Is Charge - DS1 | | | UNC1X | UNCCC | | 5.61 | 5.61 | 7.00 | 7.00 | | | | | | |
| | | Nonrecurring Currently Combined Network Elements Switch -As-Is Charge - DS3 | | | UNC3X | UNCCC | | 5.61 | 5.61 | 7.00 | 7.00 | | | | | | |
| | | Nonrecurring Currently Combined Network Elements Switch -As-Is Charge - STS1 | | | UNCSX | UNCCC | | 5.61 | 5.61 | 7.00 | 7.00 | | | | | | |
| | **Optional Features & Functions:** | | | | | | | | | | | | | | | | |
| | | Clear Channel Capability Extended Frame Option - per DS1 | I | | U1TD1, ULDD1,UNC1X | CCOEF | | 0I | 0I | 0I | 0I | | | | | | |
| | | Clear Channel Capability Super FrameOption - per DS1 | I | | U1TD1, ULDD1,UNC1X | CCOSF | | 0I | 0I | 0I | 0I | | | | | | |
| | | Clear Channel Capability (SF/ESF) Option - Subsequent Activity - per DS1 | I | | ULDD1, U1TD1, UNC1X, USL | NRCCC | | 185.26S | 23.86S | 1.99S | 0.78S | | | | | | |
| | | C-bit Parity Option - Subsequent Activity - per DS3 | I | | U1TD3, ULDD3, UE3, UNC3X | NRCC3 | | 219.58S | 7.69S | .7370S | 0S | | | | | | |
| | **MULTIPLEXERS** | | | | | | | | | | | | | | | | |
| | | DS1 to DS0 Channel System per month | | | UNC1X | MQ1 | 107.57 | 91.24 | 62.71 | 10.56 | 9.81 | | | | | | |
| | | OCU-DP COCI (data) - DS1 to DS0 Channel System - per month (2.4-64kbs) used for a Local Loop | | | UDL | 1D1DD | 1.19 | 6.59 | 4.73 | | | | | | | | |
| | | OCU-DP COCI (data) - DS1 to DS0 Channel System - per month (2.4-64kbs) used for connection to a channelized DS1 Local Channel in the same SWC as collocation | | | U1TUD | 1D1DD | 1.19 | 6.59 | 4.73 | | | | | | | | |
| | | 2-wire ISDN COCI (BRITE) - DS1 to DS0 Channel Systsem - per month for a Local Loop | | | UDN | UC1CA | 2.56 | 6.59 | 4.73 | | | | | | | | |
| | | 2-wire ISDN COCI (BRITE) - DS1 to DS0 Channel Systsem - per month used for connection to a channelized DS1 Local Channel in the same SWC as collocation | | | U1TUB | UC1CA | 2.56 | 6.59 | 4.73 | | | | | | | | |
| | | Voice Grade COCI - DS1 to DS0 Channel System - per month used for a Local Loop | | | UEA | 1D1VG | 0.56 | 6.59 | 4.73 | | | | | | | | |
| | | Voice Grade COCI - DS1 to DS0 Channel System - per month used for connection to a channelized DS1 Local Channel in the same SWC as collocation | | | U1TUC | 1D1VG | 0.56 | 6.59 | 4.73 | | | | | | | | |
| | | DS3 to DS1 Channel System per month | | | UNC3X | MQ3 | 144.02 | 178.54 | 94.18 | 33.33 | 31.90 | | | | | | |
| | | STS-1 to DS1 Channel System per month | | | UNCSX | MQ3 | 144.02 | 178.54 | 94.18 | 33.33 | 31.90 | | | | | | |
| | | DS1 COCI used with Loop per month | | | USL | UC1D1 | 8.64 | 6.59 | 4.73 | | | | | | | | |
| | | DS1 COCI (used for connection to a channelized DS1 Local Channel in the same SWC as collocation) per month | | | U1TUA | UC1D1 | 8.64 | 6.59 | 4.73 | | | | | | | | |
| | | DS1 COCI used with Interoffice Channel per month | | | U1TD1 | UC1D1 | 8.64 | 6.59 | 4.73 | | | | | | | | |
| | | DS3 Interface Unit (DS1 COCI) used with Local Channel per month | | | ULDD1 | UC1D1 | 8.64 | 6.59 | 4.73 | | | | | | | | |
| **UNBUNDLED LOCAL EXCHANGE SWITCHING(PORTS)** | | | | | | | | | | | | | | | | | |
| | **Exchange Ports** | | | | | | | | | | | | | | | | |
| | **NOTE: Although the Port Rate includes all available features in GA, KY, LA & TN, the desired features will need to be ordered using retail USOCs** | | | | | | | | | | | | | | | | |
| | **2-WIRE VOICE GRADE LINE PORT RATES (RES)** | | | | | | | | | | | | | | | | |
| | | Exchange Ports - 2-Wire Analog Line Port- Res. | | | UEPSR | UEPRL | 1.65 | 2.38 | 2.28 | 1.42 | 1.33 | | | | | | |
| | | Exchange Ports - 2-Wire Analog Line Port with Caller ID - Res. | | | UEPSR | UEPRC | 1.65 | 2.38 | 2.28 | 1.42 | 1.33 | | | | | | |
| | | Exchange Ports - 2-Wire Analog Line Port outgoing only - Res. | | | UEPSR | UEPRO | 1.65 | 2.38 | 2.28 | 1.42 | 1.33 | | | | | | |
| | | Exchange Ports - 2-Wire VG unbundled SC extended local dialing parity Port with Caller ID - Res. | | | UEPSR | UEPAU | 1.65 | 2.38 | 2.28 | 1.42 | 1.33 | | | | | | |
| | | Exchange Ports - 2-Wire VG unbundled South Carolina Area Calling port with Caller ID - Res (LW8) | | | UEPSR | UEPAJ | 1.65 | 2.38 | 2.28 | 1.42 | 1.33 | | | | | | |
| | | Exchange Ports - 2-Wire VG unbundled res, low usage line port with Caller ID (LUM) | | | UEPSR | UEPAP | 1.65 | 2.38 | 2.28 | 1.42 | 1.33 | | | | | | |
| | | Exchange Ports - 2-Wire VG South Carolina Residence Dialing Plan without Caller ID | | | UEPSR | UEPWL | 1.65 | 2.38 | 2.28 | 1.42 | 1.33 | | | | | | |

| UNBUNDLED NETWORK ELEMENTS - South Carolina | | | | | | | | | | | | | | Attachment: 2 | | Exhibit: A | |
|---|---|---|---|---|---|---|---|---|---|---|---|---|---|---|---|---|---|
| CATEGORY | RATE ELEMENTS | Interim | Zone | BCS | USOC | RATES ($) | | | | | Svc Order Submitted Elec per LSR | Svc Order Submitted Manually per LSR | Incremental Charge - Manual Svc Order vs. Electronic-1st | Incremental Charge - Manual Svc Order vs. Electronic-Add'l | Incremental Charge - Manual Svc Order vs. Electronic-Disc 1st | Incremental Charge - Manual Svc Order vs. Electronic-Disc Add'l |
| | | | | | | Rec | Nonrecurring | | Nonrecurring Disconnect | | OSS Rates ($) | | | | | |
| | | | | | | | First | Add'l | First | Add'l | SOMEC | SOMAN | SOMAN | SOMAN | SOMAN | SOMAN |
| | Exchange Ports - 2-Wire VG South Carolina Residence Area Calling Plan without Caller ID capability | | | UEPSR | UEPRS | 1.65 | 2.38 | 2.28 | 1.42 | 1.33 | | | | | | |
| | 2-Wire voice unbundled Low Usage Line Port without Caller ID Capability | | | UEPSR | UEPRT | 1.65 | 2.38 | 2.28 | 1.42 | 1.33 | | | | | | |
| | Subsequent Activity | | | UEPSR | USASC | 0.00 | 0.00 | 0.00 | | | | | | | | |
| FEATURES | | | | | | | | | | | | | | | | |
| | All Available Vertical Features | | | UEPSR | UEPVF | 3.04 | 0.00 | 0.00 | | | | | | | | |
| 2-WIRE VOICE GRADE LINE PORT RATES (BUS) | | | | | | | | | | | | | | | | |
| | Exchange Ports - 2-Wire Analog Line Port without Caller ID - Bus | | | UEPSB | UEPBL | 1.65 | 2.38 | 2.28 | 1.42 | 1.33 | | | | | | |
| | Exchange Ports - 2-Wire VG unbundled Line Port with unbundled port with Caller+E484 ID - Bus. | | | UEPSB | UEPBC | 1.65 | 2.38 | 2.28 | 1.42 | 1.33 | | | | | | |
| | Exchange Ports - 2-Wire Analog Line Port outgoing only - Bus. | | | UEPSB | UEPBO | 1.65 | 2.38 | 2.28 | 1.42 | 1.33 | | | | | | |
| | Exchange Ports - 2-Wire VG unbundled SC extended local dialing parity Port with Caller ID - Bus. | | | UEPSB | UEPAZ | 1.65 | 2.38 | 2.28 | 1.42 | 1.33 | | | | | | |
| | Exhange Ports - 2-Wire VG unbundled incoming only port with Caller ID - Bus | | | UEPSB | UEPB1 | 1.65 | 2.38 | 2.28 | 1.42 | 1.33 | | | | | | |
| | Exchange Ports - 2-Wire VG unbundled South Carolina Bus Area Calling Port with Caller ID - Bus (LMB) | | | UEPSB | UEPAB | 1.65 | 2.38 | 2.28 | 1.42 | 1.33 | | | | | | |
| | Exchange Ports - 2-Wire Voice South Carolina Business Dialing Plan without Caller ID | | | UEPSB | UEPWM | 1.65 | 2.38 | 2.28 | 1.42 | 1.33 | | | | | | |
| | Exchange Ports - 2-Wire Voice South Carolina Business Area Calling Port without Caller ID | | | UEPSB | UEPBB | 1.65 | 2.38 | 2.28 | 1.42 | 1.33 | | | | | | |
| | 2-Wire voice unbundled Incoming Only Port without Caller ID Capability | | | UEPSB | UEPBE | 1.65 | 2.38 | 2.28 | 1.42 | 1.33 | | | | | | |
| | Subsequent Activity | | | UEPSB | USASC | 0.00 | 0.00 | 0.00 | | | | | | | | |
| FEATURES | | | | | | | | | | | | | | | | |
| | All Available Vertical Features | | | UEPSB | UEPVF | 3.04 | 0.00 | 0.00 | | | | | | | | |
| | All Available Vertical Features | | | | UEPVF | 3.04 | 0.00 | 0.00 | | | | | | | | |
| EXCHANGE PORT RATES (DID & PBX) | | | | | | | | | | | | | | | | |
| | 2-Wire VG Unbundled 2-Way PBX Trunk - Res | | | UEPSE | UEPRD | 1.65 | 31.34 | 14.88 | 13.97 | 0.90 | | | | | | |
| | 2-Wire VG Line Side Unbundled 2-Way PBX Trunk - Bus | | | UEPSP | UEPPC | 1.65 | 31.34 | 14.88 | 13.97 | 0.90 | | | | | | |
| | 2-Wire VG Line Side Unbundled Outward PBX Trunk - Bus | | | UEPSP | UEPPO | 1.65 | 31.34 | 14.88 | 13.97 | 0.90 | | | | | | |
| | 2-Wire VG Line Side Unbundled Incoming PBX Trunk - Bus | | | UEPSP | UEPP1 | 1.65 | 31.34 | 14.88 | 13.97 | 0.90 | | | | | | |
| | 2-Wire Analog Long Distance Terminal PBX Trunk - Bus | | | UEPSP | UEPLD | 1.65 | 31.34 | 14.88 | 13.97 | 0.90 | | | | | | |
| | 2-Wire Voice Unbundled PBX LD Terminal Ports | | | UEPSP | UEPLD | 1.65 | 31.34 | 14.88 | 13.97 | 0.90 | | | | | | |
| | 2-Wire Vice Unbundled 2-Way PBX Usage Port | | | UEPSP | UEPXA | 1.65 | 31.34 | 14.88 | 13.97 | 0.90 | | | | | | |
| | 2-Wire Voice Unbundled PBX Toll Terminal Hotel Ports | | | UEPSP | UEPXB | 1.65 | 31.34 | 14.88 | 13.97 | 0.90 | | | | | | |
| | 2-Wire Voice Unbundled PBX LD DDD Terminals Port | | | UEPSP | UEPXC | 1.65 | 31.34 | 14.88 | 13.97 | 0.90 | | | | | | |
| | 2-Wire Voice Unbundled PBX LD Terminal Switchboard Port | | | UEPSP | UEPXD | 1.65 | 31.34 | 14.88 | 13.97 | 0.90 | | | | | | |
| | 2-Wire Voice Unbundled PBX LD Terminal Switchboard IDD Capable Port | | | UEPSP | UEPXE | 1.65 | 31.34 | 14.88 | 13.97 | 0.90 | | | | | | |
| | 2-Wire Voice Unbundled 2-Way PBX Hotel/Hospital Economy Administrative Calling Port | | | UEPSP | UEPXL | 1.65 | 31.34 | 14.88 | 13.97 | 0.90 | | | | | | |
| | 2-Wire Voice Unbundled 2-Way PBX Hotel/Hospital Economy Room Calling Port | | | UEPSP | UEPXM | 1.65 | 31.34 | 14.88 | 13.97 | 0.90 | | | | | | |
| | 2-Wire Voice Unbundled 1-Way Outgoing PBX Hotel/Hospital Discount Room Calling Port | | | UEPSP | UEPXO | 1.65 | 31.34 | 14.88 | 13.97 | 0.90 | | | | | | |
| | 2-Wire Voice Unbundled 1-Way Outgoing PBX Measured Port | | | UEPSP | UEPXS | 1.65 | 31.34 | 14.88 | 13.97 | 0.90 | | | | | | |
| | 2-Wire Voice Unbundled 2-Way PBX South Carolina Area Plus Calling Port | | | UEPSP | UEPXT | 1.65 | 31.34 | 14.88 | 13.97 | 0.90 | | | | | | |
| | Subsequent Activity | | | UEPSP | USASC | 0.00 | 0.00 | 0.00 | | | | | | | | |
| FEATURES | | | | | | | | | | | | | | | | |
| | All Available Vertical Features | | | UEPSP UEPSE | UEPVF | 3.04 | 0.00 | 0.00 | | | | | | | | |
| EXCHANGE PORT RATES (COIN) | | | | | | | | | | | | | | | | |
| | Exchange Ports - Coin Port | | | | | 1.65 | 2.38 | 2.28 | 1.42 | 1.33 | | | | | | |
| Local Switching Features offered with Port | | | | | | | | | | | | | | | | |
| NOTE: Transmission/usage charges associated with POTS circuit switched usage will also apply to circuit switched voice and/or circuit switched data transmission by B-Channels associated with 2-wire ISDN ports. | | | | | | | | | | | | | | | | |

| UNBUNDLED NETWORK ELEMENTS - South Carolina | | | | | | | | | | | | | | Attachment: 2 | | Exhibit: A | |
|---|---|---|---|---|---|---|---|---|---|---|---|---|---|---|---|---|---|
| CATEGORY | RATE ELEMENTS | Interim | Zone | BCS | USOC | RATES ($) | | | | | Svc Order Submitted Elec per LSR | Svc Order Submitted Manually per LSR | Incremental Charge - Manual Svc Order vs. Electronic-1st | Incremental Charge - Manual Svc Order vs. Electronic-Add'l | Incremental Charge - Manual Svc Order vs. Electronic-Disc 1st | Incremental Charge - Manual Svc Order vs. Electronic-Disc Add'l |
| | | | | | | Rec | Nonrecurring | | Nonrecurring Disconnect | | OSS Rates ($) | | | | | |
| | | | | | | | First | Add'l | First | Add'l | SOMEC | SOMAN | SOMAN | SOMAN | SOMAN | SOMAN |
| | NOTE: Access to B Channel or D Channel Packet capabilities will be available only through BFR/New Business Request Process. Rates for the packet capabilities will be determined via the Bona Fide Request/New Business Request Process. | | | | | | | | | | | | | | | |
| UNBUNDLED LOCAL EXCHANGE SWITCHING(PORTS) | | | | | | | | | | | | | | | | |
| | EXCHANGE PORT RATES | | | | | | | | | | | | | | | |
| | The DS1 Port rates below for 4-Wire DDITS Trunk Port and 4-Wire ISDN Port in this rate exhibit apply to the embedded base in place as of 10/2/03 until 4/1/04. After 4/1/04 these rates shall revert to tariff rates or a separate agreement. | | | | | | | | | | | | | | | |
| | Requests for 4-Wire DDITS Trunk Ports with 4-Wire ISDN DS1 Ports after the effective date of this amendment shall be provided pursuant to a separate agreement or tariff at BellSouth's discretion. | | | | | | | | | | | | | | | |
| | Exchange Ports - 2-Wire DID Port | | | UEPEX | UEPP2 | 8.86 | 119.57 | 18.78 | 60.03 | 3.77 | | | | | | |
| | Exchange Ports - DDITS Port - 4-Wire DS1 Port with DID capability (E:4/1/2004) | | | UEPDD | UEPDD | 73.62 | 202.47 | 95.90 | 72.75 | 2.47 | | | | | | |
| | Exchange Ports - 2-Wire ISDN Port (See Notes below.) | | | UEPTX, UEPSX | U1PMA | 13.38 | 72.93 | 53.11 | 47.90 | 10.76 | | | | | | |
| | All Features Offered | | | UEPTX, UEPSX | UEPVF | 3.04 | 0.00 | 0.00 | | | | | | | | |
| | Exchange Ports - 2-Wire ISDN Port -- Channel Profiles | | | UEPTX, UEPSX | U1UMA | 0.00 | 0.00 | 0.00 | | | | | | | | |
| | NOTE: Transmission/usage charges associated with POTS circuit switched usage will also apply to circuit switched voice and/or circuit switched data transmission by B-Channels associated with 2-wire ISDN ports. | | | | | | | | | | | | | | | |
| | NOTE: Access to B Channel or D Channel Packet capabilities will be available only through BFR/New Business Request Process. Rates for the packet capabilities will be determined via the Bona Fide Request/New Business Request Process. | | | | | | | | | | | | | | | |
| | EXCHANGE PORT RATES (continued) | | | | | | | | | | | | | | | |
| | Exchange Ports - 4-Wire ISDN DS1 Port with Detailed E911 Locator Capability (E:4/1/2004) | | | UEPEX | UEPEX | 107.44 | 204.27 | 101.78 | 79.35 | 20.10 | | | | | | |
| | Exchange Ports - 4-Wire ISDN DS1 Port (E:4/1/2004) | | | UEPDX | UEPDX | 107.44 | 204.27 | 101.78 | 79.35 | 20.10 | | | | | | |
| | Physical Collocation - DS1 Cross-Connects | | | UEPEX UEPDX | PE1P1 | 1.12 | 22.08 | 15.96 | 6.42 | 5.80 | | | | | | |
| | Virtual collocation - Special Access & UNE,cross-connect per DS1 | | | UEPEX UEPDX | CNC1X | 1.12 | 22.08 | 15.96 | 6.42 | 5.80 | | | | | | |
| | Detailed E911 with Locator Capability (required with UEPEX port) | | | | | | | | | | | | | | | |
| | Unbundled Exchange Ports, 4-Wire ISDN DS1 Port - E911 Locator Capability - Initial Profile Establishment per CLEC per State | | | UEPEX | UEP1A | 0.00 | 1,808.00 | | 156.43 | | | | | | | |
| | Unbundled Exchange Ports, 4-Wire ISDN DS1 Port - E911 Locator Capability - Subsequent Profile Changes, Additions, Deletions | | | UEPEX | UEP1B | 0.00 | 175.53 | | | | | | | | | |
| | New or Additional PRI Telephone Numbers | | | | | | | | | | | | | | | |
| | Unbundled Exchange Ports, 4-Wire ISDN DS1 Port - E911 Locator Capability 2-way Telephone Numbers, per number in E911 profile [New or Additional] | | | UEPEX | UEP1C | 0.0698 | 0.49 | 0.49 | | | | | | | | |
| | Unbundled Exchange Ports, 4-Wire ISDN DS1 Port - E911 Locator Capability - Outdial Telephone Numbers, per number in E911 profile [New or Additional] | | | UEPEX | UEP1D | 0.0698 | 11.54 | 11.54 | | | | | | | | |
| | Unbundled Exchange Ports, 4-Wire ISDN DS1 Port - Inward Telephone Numbers - Inward Data Only Option [New or Additional] | | | UEPDX | UEP1E | 0.00 | 0.49 | 0.49 | | | | | | | | |
| | Exchange Ports - 4-Wire ISDN DS1 Port - Subsequent [New] Inward Tel Numbers [Customer Testing Purposes] | | | UEPEX | PR7ZT | 0.00 | 23.07 | 23.07 | | | | | | | | |
| | LOCAL NUMBER PORTABILITY | | | | | | | | | | | | | | | |
| | Local Number Portability (1 per port) | | | UEPEX UEPDX | LNPCN | 1.75 | | | | | | | | | | |
| | INTERFACE (Provsioning Only) | | | | | | | | | | | | | | | |
| | Voice/Data | | | UEPEX | PR71V | 0.00 | 0.00 | 0.00 | | | | | | | | |
| | Digital Data | | | UEPEX | PR71D | 0.00 | 0.00 | 0.00 | | | | | | | | |
| | Inward Data | | | UEPDX | PR71E | 0.00 | 0.00 | 0.00 | | | | | | | | |
| | New or Additional Channel | | | | | | | | | | | | | | | |
| | New or Additional - Voice/Data "B" Channel | | | UEPEX | PR7BV | 0.00 | 14.56 | | | | | | | | | |
| | New or Additional - Digital Data "B" Channel | | | UEPEX | PR7BF | 0.00 | 14.56 | | | | | | | | | |
| | New or Additional Inward Data "B" Channel | | | UEPDX | PR7BD | 0.00 | 14.56 | | | | | | | | | |
| | New or Additional Useage Sensitive Voice Data "B" Channel | | | UEPEX | PR7BS | 0.00 | | | | | | | | | | |
| | New or Additional Useage Sensitive Digital Data "B" Channel | | | UEPEX | PR7BU | 0.00 | | | | | | | | | | |
| | New or Additional PRI "D" Channel | | | UEPEX | PR7EX | 0.00 | 14.56 | | | | | | | | | |
| | CALL TYPES | | | | | | | | | | | | | | | |
| | Inward | | | UEPEX UEPDX | PR7C1 | 0.00 | 0.00 | 0.00 | | | | | | | | |
| | Outward | | | UEPEX | PR7CO | 0.00 | 0.00 | 0.00 | | | | | | | | |
| | Two-way | | | UEPEX | PR7CC | 0.00 | 0.00 | 0.00 | | | | | | | | |
| | UNBUNDLED PORT with REMOTE CALL FORWARDING CAPABILITY | | | | | | | | | | | | | | | |
| | UNBUNDLED REMOTE CALL FORWARDING SERVICE - RESIDENCE | | | | | | | | | | | | | | | |
| | Unbundled Remote Call Forwarding Service, Area Calling, Res | | | UEPVR | UERAC | 1.65 | 2.38 | 2.28 | 1.42 | 1.33 | | | | | | |

| UNBUNDLED NETWORK ELEMENTS - South Carolina | | | | | | | | | | | | | | Attachment: 2 | | Exhibit: A | |
|---|---|---|---|---|---|---|---|---|---|---|---|---|---|---|---|---|---|
| CATEGORY | RATE ELEMENTS | Interim | Zone | BCS | USOC | RATES ($) | | | | | Svc Order Submitted Elec per LSR | Svc Order Submitted Manually per LSR | Incremental Charge - Manual Svc Order vs. Electronic-1st | Incremental Charge - Manual Svc Order vs. Electronic-Add'l | Incremental Charge - Manual Svc Order vs. Electronic-Disc 1st | Incremental Charge - Manual Svc Order vs. Electronic-Disc Add'l |
| | | | | | | Rec | Nonrecurring | | Nonrecurring Disconnect | | OSS Rates ($) | | | | | |
| | | | | | | | First | Add'l | First | Add'l | SOMEC | SOMAN | SOMAN | SOMAN | SOMAN | SOMAN |
| | Unbundled Remote Call Forwarding Service, Local Calling - Res | | | UEPVR | UERLC | 1.65 | 2.38 | 2.28 | 1.42 | 1.33 | | | | | | |
| | Unbundled Remote Call Forwarding Service, InterLATA - Res | | | UEPVR | UERTE | 1.65 | 2.38 | 2.28 | 1.42 | 1.33 | | | | | | |
| | Unbundled Remote Call Forwarding Service, IntraLATA - Res | | | UEPVR | UERTR | 1.65 | 2.38 | 2.28 | 1.42 | 1.33 | | | | | | |
| Non-Recurring | | | | | | | | | | | | | | | | |
| | Unbundled Remote Call Forwarding Service - Conversion - Switch-as-is | | | UEPVR | USAC2 | | 0.10 | 0.10 | | | | | | | | |
| | Unbundled Remote Call Forwarding Service - Conversion with allowed change (PIC and LPIC) | | | UEPVR | USACC | | 0.10 | 0.10 | | | | | | | | |
| UNBUNDLED REMOTE CALL FORWARDING - Bus | | | | | | | | | | | | | | | | |
| | Unbundled Remote Call Forwarding Service, Area Calling - Bus | | | UEPVB | UERAC | 1.65 | 2.38 | 2.28 | 1.42 | 1.33 | | | | | | |
| | Unbundled Remote Call Forwarding Service, Local Calling - Bus | | | UEPVB | UERLC | 1.65 | 2.38 | 2.28 | 1.42 | 1.33 | | | | | | |
| | Unbundled Remote Call Forwarding Service, InterLATA - Bus | | | UEPVB | UERTE | 1.65 | 2.38 | 2.28 | 1.42 | 1.33 | | | | | | |
| | Unbundled Remote Call Forwarding Service, IntraLATA - Bus | | | UEPVB | UERTR | 1.65 | 2.38 | 2.28 | 1.42 | 1.33 | | | | | | |
| | Unbundled Remote Call Forwarding Service Expanded and Exception Local Calling | | | UEPVB | UERVJ | 1.65 | 2.38 | 2.28 | 1.42 | 1.33 | | | | | | |
| Non-Recurring | | | | | | | | | | | | | | | | |
| | Unbundled Remote Call Forwarding Service - Conversion - Switch-as-is | | | UEPVB | USAC2 | | 0.10 | 0.10 | | | | | | | | |
| | Unbundled Remote Call Forwarding Service - Conversion with allowed change (PIC and LPIC) | | | UEPVB | USACC | | 0.10 | 0.10 | | | | | | | | |
| UNBUNDLED LOCAL SWITCHING, PORT USAGE | | | | | | | | | | | | | | | | |
| End Office Switching (Port Usage) | | | | | | | | | | | | | | | | |
| | End Office Switching Function, Per MOU | | | | | 0.0010519 | | | | | | | | | | |
| | End Office Trunk Port - Shared, Per MOU | | | | | 0.0002136 | | | | | | | | | | |
| Tandem Switching (Port Usage) (Local or Access Tandem) | | | | | | | | | | | | | | | | |
| | Tandem Switching Function Per MOU | | | | | 0.0001634 | | | | | | | | | | |
| | Tandem Trunk Port - Shared, Per MOU | | | | | 0.0002863 | | | | | | | | | | |
| | Tandem Switching Function Per MOU (Melded) | | | | | 0.00004951 | | | | | | | | | | |
| | Tandem Trunk Port - Shared, Per MOU (Melded) | | | | | 0.000086749 | | | | | | | | | | |
| | Melded Factor: 30.30% of the Tandem Rate | | | | | | | | | | | | | | | |
| Common Transport | | | | | | | | | | | | | | | | |
| | Common Transport - Per Mile, Per MOU | | | | | 0.0000045 | | | | | | | | | | |
| | Common Transport - Facilities Termination Per MOU | | | | | 0.0004095 | | | | | | | | | | |
| UNBUNDLED PORT/LOOP COMBINATIONS - COST BASED RATES | | | | | | | | | | | | | | | | |
| Cost Based Rates are applied where BellSouth is required by FCC and/or State Commission rule to provide Unbundled Local Switching or Switch Ports. | | | | | | | | | | | | | | | | |
| Features shall apply to the Unbundled Port/Loop Combination - Cost Based Rate section in the same manner as they are applied to the Stand-Alone Unbundled Port section of this Rate Exhibit. | | | | | | | | | | | | | | | | |
| End Office and Tandem Switching Usage and Common Transport Usage rates in the Port section of this rate exhibit shall apply to all combinations of loop/port network elements except for UNE Coin Port/Loop Combinations. | | | | | | | | | | | | | | | | |
| The first and additional Port nonrecurring charges apply to Not Currently Combined Combos. For Currently Combined Combos the nonrecurring charges shall be those identified in the Nonrecurring - Currently Combined sections. | | | | | | | | | | | | | | | | |
| 2-WIRE VOICE GRADE LOOP WITH 2-WIRE LINE PORT (RES) | | | | | | | | | | | | | | | | |
| UNE Port/Loop Combination Rates | | | | | | | | | | | | | | | | |
| | 2-Wire VG Loop/Port Combo - Zone 1 | | 1 | | | 14.89 | | | | | | | | | | |
| | 2-Wire VG Loop/Port Combo - Zone 2 | | 2 | | | 21.52 | | | | | | | | | | |
| | 2-Wire VG Loop/Port Combo - Zone 3 | | 3 | | | 27.17 | | | | | | | | | | |
| UNE Loop Rates | | | | | | | | | | | | | | | | |
| | 2-Wire Voice Grade Loop (SL1) - Zone 1 | | 1 | UEPRX | UEPLX | 13.76 | | | | | | | | | | |
| | 2-Wire Voice Grade Loop (SL1) - Zone 2 | | 2 | UEPRX | UEPLX | 20.38 | | | | | | | | | | |
| | 2-Wire Voice Grade Loop (SL1) - Zone 3 | | 3 | UEPRX | UEPLX | 26.04 | | | | | | | | | | |
| 2-Wire Voice Grade Line Port Rates (Res) | | | | | | | | | | | | | | | | |
| | 2-Wire voice unbundled port - residence | | | UEPRX | UEPRL | 1.13 | 40.30 | 19.90 | 24.98 | 6.65 | | | | | | |
| | 2-Wire voice unbundled port with Caller ID - res | | | UEPRX | UEPRC | 1.13 | 40.30 | 19.90 | 24.98 | 6.65 | | | | | | |
| | 2-Wire voice unbundled port outgoing only - res | | | UEPRX | UEPRO | 1.13 | 40.30 | 19.90 | 24.98 | 6.65 | | | | | | |
| | 2-Wire voice Grade unbundled South Carolina extended local dialing parity port with Caller ID - res | | | UEPRX | UEPAU | 1.13 | 40.30 | 19.90 | 24.98 | 6.65 | | | | | | |
| | 2-Wire voice unbundled South Carolina Area Calling port with Caller ID - res (LW8) | | | UEPRX | UEPAJ | 1.13 | 40.30 | 19.90 | 24.98 | 6.65 | | | | | | |

## UNBUNDLED NETWORK ELEMENTS - South Carolina

Attachment: 2 | Exhibit: A

| CATEGORY | RATE ELEMENTS | Interim | Zone | BCS | USOC | RATES ($) | | | | | Svc Order Submitted Elec per LSR | Svc Order Submitted Manually per LSR | Incremental Charge - Manual Svc Order vs. Electronic-1st | Incremental Charge - Manual Svc Order vs. Electronic-Add'l | Incremental Charge - Manual Svc Order vs. Electronic-Disc 1st | Incremental Charge - Manual Svc Order vs. Electronic-Disc Add'l |
|---|---|---|---|---|---|---|---|---|---|---|---|---|---|---|---|---|
| | | | | | | Rec | Nonrecurring | | Nonrecurring Disconnect | | OSS Rates ($) | | | | | |
| | | | | | | | First | Add'l | First | Add'l | SOMEC | SOMAN | SOMAN | SOMAN | SOMAN | SOMAN |
| | 2-Wire voice unbundles res, low usage line port with Caller ID (LUM) | | | UEPRX | UEPAP | 1.13 | 37.93 | 16.72 | | | | | | | | |
| | 2-Wire Voice Unbundled South Carolina Residence Dialing Plan without Caller ID | | | UEPRX | UEPWL | 1.13 | 40.30 | 19.90 | 24.98 | 6.65 | | | | | | |
| | 2-Wire voice unbundled South Carolina Area Calling Port without Caller ID Capability | | | UEPRX | UEPRS | 1.13 | 40.30 | 19.90 | 24.98 | 6.65 | | | | | | |
| | 2-Wire voice unbundled Low Usage Line Port without Caller ID Capability | | | UEPRX | UEPRT | 1.13 | 40.30 | 19.90 | 24.98 | 6.65 | | | | | | |
| **FEATURES** | | | | | | | | | | | | | | | | |
| | All Features Offered | | | UEPRX | UEPVF | 3.04 | 0.00 | 0.00 | | | | | | | | |
| **LOCAL NUMBER PORTABILITY** | | | | | | | | | | | | | | | | |
| | Local Number Portability (1 per port) | | | UEPRX | LNPCX | 0.35 | | | | | | | | | | |
| **NONRECURRING CHARGES (NRCs) - CURRENTLY COMBINED** | | | | | | | | | | | | | | | | |
| | 2-Wire Voice Grade Loop / Line Port Combination - Conversion - Switch-as-is | | | UEPRX | USAC2 | | 0.10 | 0.10 | | | | | | | | |
| | 2-Wire Voice Grade Loop / Line Port Combination - Conversion - Switch with change | | | UEPRX | USACC | | 0.10 | 0.10 | | | | | | | | |
| **ADDITIONAL NRCs** | | | | | | | | | | | | | | | | |
| | 2-Wire Voice Grade Loop/Line Port Combination - Subsequent Activity | | | UEPRX | USAS2 | 0.00 | 0.00 | 0.00 | | | | | | | | |
| | Unbundled Miscellaneous Rate Element, Tag Loop at End User Premise | | | UEPRX | URETL | | 8.33 | 0.83 | | | | | | | | |
| **OFF/ON PREMISES EXTENSION CHANNELS** | | | | | | | | | | | | | | | | |
| | 2 Wire Analog Voice Grade Extension Loop – Non-Design | | 1 | UEPRX | UEAEN | 14.94 | 37.92 | 17.62 | 23.56 | 5.32 | | | | | | |
| | 2 Wire Analog Voice Grade Extension Loop – Non-Design | | 2 | UEPRX | UEAEN | 21.39 | 37.92 | 17.62 | 23.56 | 5.32 | | | | | | |
| | 2 Wire Analog Voice Grade Extension Loop – Non-Design | | 3 | UEPRX | UEAEN | 26.72 | 37.92 | 17.62 | 23.56 | 5.32 | | | | | | |
| | 2 Wire Analog Voice Grade Extension Loop – Design | | 1 | UEPRX | UEAED | 16.68 | 105.98 | 68.43 | 53.05 | 10.61 | | | | | | |
| | 2 Wire Analog Voice Grade Extension Loop – Design | | 2 | UEPRX | UEAED | 23.13 | 105.98 | 68.43 | 53.05 | 10.61 | | | | | | |
| | 2 Wire Analog Voice Grade Extension Loop – Design | | 3 | UEPRX | UEAED | 28.46 | 105.98 | 68.43 | 53.05 | 10.61 | | | | | | |
| **INTEROFFICE TRANSPORT** | | | | | | | | | | | | | | | | |
| | Interoffice Transport - Dedicated - 2 Wire Voice Grade - Facility Termination | | | UEPRX | U1TV2 | 24.30 | 40.63 | 27.47 | 16.77 | 6.91 | | | | | | |
| | Interoffice Transport - Dedicated - 2 Wire Voice Grade - Per Mile or Fraction Mile | | | UEPRX | U1TVM | 0.0167 | 0.00 | 0.00 | | | | | | | | |
| **2-WIRE VOICE GRADE LOOP WITH 2-WIRE LINE PORT (BUS)** | | | | | | | | | | | | | | | | |
| **UNE Port/Loop Combination Rates** | | | | | | | | | | | | | | | | |
| | 2-Wire VG Loop/Port Combo - Zone 1 | | 1 | | | 14.89 | | | | | | | | | | |
| | 2-Wire VG Loop/Port Combo - Zone 2 | | 2 | | | 21.52 | | | | | | | | | | |
| | 2-Wire VG Loop/Port Combo - Zone 3 | | 3 | | | 27.17 | | | | | | | | | | |
| **UNE Loop Rates** | | | | | | | | | | | | | | | | |
| | 2-Wire Voice Grade Loop (SL1) - Zone 1 | | 1 | UEPBX | UEPLX | 13.76 | | | | | | | | | | |
| | 2-Wire Voice Grade Loop (SL1) - Zone 2 | | 2 | UEPBX | UEPLX | 20.38 | | | | | | | | | | |
| | 2-Wire Voice Grade Loop (SL1) - Zone 3 | | 3 | UEPBX | UEPLX | 26.04 | | | | | | | | | | |
| **2-Wire Voice Grade Line Port (Bus)** | | | | | | | | | | | | | | | | |
| | 2-Wire voice unbundled port without Caller ID - bus | | | UEPBX | UEPBL | 1.13 | 40.30 | 19.90 | 24.98 | 6.65 | | | | | | |
| | 2-Wire voice unbundled port with Caller + E484 ID - bus | | | UEPBX | UEPBC | 1.13 | 40.30 | 19.90 | 24.98 | 6.65 | | | | | | |
| | 2-Wire voice unbundled port outgoing only - bus | | | UEPBX | UEPBO | 1.13 | 40.30 | 19.90 | 24.98 | 6.65 | | | | | | |
| | 2-Wire voice Grade unbundled South Carolina extended local dialing parity port with Caller ID - bus | | | UEPBX | UEPAZ | 1.13 | 40.30 | 19.90 | 24.98 | 6.65 | | | | | | |
| | 2-Wire voice unbundled incoming only port with Caller ID - Bus | | | UEPBX | UEPB1 | 1.13 | 40.30 | 19.90 | 24.98 | 6.65 | | | | | | |
| | 2-Wire voice unbundled South Carolina Bus Area Calling Port with Caller ID (LMB) | | | UEPBX | UEPAB | 1.13 | 40.30 | 19.90 | 24.98 | 6.65 | | | | | | |
| | 2-Wire Voice Unbundled South Carolina Business Dialing Plan without Caller ID | | | UEPBX | UEPWM | 1.13 | 40.30 | 19.90 | 24.98 | 6.65 | | | | | | |
| | 2-Wire voice unbundled South Carolina Business Area Calling Port without Caller ID Capability | | | UEPBX | UEPBB | 1.13 | 40.30 | 19.90 | 24.98 | 6.65 | | | | | | |
| | 2-Wire voice unbundled Incoming Only Port without Caller ID Capability | | | UEPBX | UEPBE | 1.13 | 40.30 | 19.90 | 24.98 | 6.65 | | | | | | |
| **LOCAL NUMBER PORTABILITY** | | | | | | | | | | | | | | | | |

| UNBUNDLED NETWORK ELEMENTS - South Carolina | | | | | | | | | | | | | | Attachment: 2 | | Exhibit: A | |
|---|---|---|---|---|---|---|---|---|---|---|---|---|---|---|---|---|---|
| CATEGORY | RATE ELEMENTS | Interim | Zone | BCS | USOC | RATES ($) | | | | | Svc Order Submitted Elec per LSR | Svc Order Submitted Manually per LSR | Incremental Charge - Manual Svc Order vs. Electronic-1st | Incremental Charge - Manual Svc Order vs. Electronic-Add'l | Incremental Charge - Manual Svc Order vs. Electronic-Disc 1st | Incremental Charge - Manual Svc Order vs. Electronic-Disc Add'l |
| | | | | | | Rec | Nonrecurring | | Nonrecurring Disconnect | | OSS Rates ($) | | | | | |
| | | | | | | | First | Add'l | First | Add'l | SOMEC | SOMAN | SOMAN | SOMAN | SOMAN | SOMAN |
| | Local Number Portability (1 per port) | | | UEPBX | LNPCX | 0.35 | | | | | | | | | | |
| FEATURES | | | | | | | | | | | | | | | | |
| | All Features Offered | | | UEPBX | UEPVF | 3.04 | 0.00 | 0.00 | | | | | | | | |
| NONRECURRING CHARGES (NRCs) - CURRENTLY COMBINED | | | | | | | | | | | | | | | | |
| | 2-Wire Voice Grade Loop / Line Port Combination - Conversion - Switch-as-is | | | UEPBX | USAC2 | | 0.10 | 0.10 | | | | | | | | |
| | 2-Wire Voice Grade Loop / Line Port Combination - Conversion - Switch with change | | | UEPBX | USACC | | 0.10 | 0.10 | | | | | | | | |
| ADDITIONAL NRCs | | | | | | | | | | | | | | | | |
| | 2-Wire Voice Grade Loop/Line Port Combination - Subsequent Activity | | | UEPBX | USAS2 | | 0.00 | 0.00 | | | | | | | | |
| | Unbundled Miscellaneous Rate Element, Tag Loop at End User Premise | | | UEPBX | URETL | | 8.33 | 0.83 | | | | | | | | |
| OFF/ON PREMISES EXTENSION CHANNELS | | | | | | | | | | | | | | | | |
| | 2 Wire Analog Voice Grade Extension Loop – Non-Design | | 1 | UEPBX | UEAEN | 14.94 | 37.92 | 17.62 | 23.56 | 5.32 | | | | | | |
| | 2 Wire Analog Voice Grade Extension Loop – Non-Design | | 2 | UEPBX | UEAEN | 21.39 | 37.92 | 17.62 | 23.56 | 5.32 | | | | | | |
| | 2 Wire Analog Voice Grade Extension Loop – Non-Design | | 3 | UEPBX | UEAEN | 26.72 | 37.92 | 17.62 | 23.56 | 5.32 | | | | | | |
| | 2 Wire Analog Voice Grade Extension Loop – Design | | 1 | UEPBX | UEAED | 16.68 | 105.98 | 68.43 | 53.05 | 10.61 | | | | | | |
| | 2 Wire Analog Voice Grade Extension Loop – Design | | 2 | UEPBX | UEAED | 23.13 | 105.98 | 68.43 | 53.05 | 10.61 | | | | | | |
| | 2 Wire Analog Voice Grade Extension Loop – Design | | 3 | UEPBX | UEAED | 28.46 | 105.98 | 68.43 | 53.05 | 10.61 | | | | | | |
| INTEROFFICE TRANSPORT | | | | | | | | | | | | | | | | |
| | Interoffice Transport - Dedicated - 2 Wire Voice Grade - Facility Termination | | | UEPBX | U1TV2 | 24.30 | 40.63 | 27.47 | 16.77 | 6.91 | | | | | | |
| | Interoffice Transport - Dedicated - 2 Wire Voice Grade - Per Mile or Fraction Mile | | | UEPBX | U1TVM | 0.0167 | 0.00 | 0.00 | | | | | | | | |
| 2-WIRE VOICE GRADE LOOP WITH 2-WIRE LINE PORT (RES - PBX) | | | | | | | | | | | | | | | | |
| UNE Port/Loop Combination Rates | | | | | | | | | | | | | | | | |
| | 2-Wire VG Loop/Port Combo - Zone 1 | | 1 | | | 14.89 | | | | | | | | | | |
| | 2-Wire VG Loop/Port Combo - Zone 2 | | 2 | | | 21.52 | | | | | | | | | | |
| | 2-Wire VG Loop/Port Combo - Zone 3 | | 3 | | | 27.17 | | | | | | | | | | |
| UNE Loop Rates | | | | | | | | | | | | | | | | |
| | 2-Wire Voice Grade Loop (SL 1) - Zone 1 | | 1 | UEPRG | UEPLX | 13.76 | | | | | | | | | | |
| | 2-Wire Voice Grade Loop (SL 1) - Zone 2 | | 2 | UEPRG | UEPLX | 20.38 | | | | | | | | | | |
| | 2-Wire Voice Grade Loop (SL 1) - Zone 3 | | 3 | UEPRG | UEPLX | 26.04 | | | | | | | | | | |
| 2-Wire Voice Grade Line Port Rates (RES - PBX) | | | | | | | | | | | | | | | | |
| | 2-Wire VG Unbundled Combination 2-Way PBX Trunk Port - Res | | | UEPRG | UEPRD | 1.13 | 69.26 | 32.50 | 37.53 | 6.22 | | | | | | |
| LOCAL NUMBER PORTABILITY | | | | | | | | | | | | | | | | |
| | Local Number Portability (1 per port) | | | UEPRG | LNPCP | 3.15 | 0.00 | 0.00 | | | | | | | | |
| FEATURES | | | | | | | | | | | | | | | | |
| | All Features Offered | | | UEPRG | UEPVF | 3.04 | 0.00 | 0.00 | | | | | | | | |
| NONRECURRING CHARGES (NRCs) - CURRENTLY COMBINED | | | | | | | | | | | | | | | | |
| | 2-Wire Voice Grade Loop/ Line Port Combination (PBX) - Conversion - Switch-As-Is | | | UEPRG | USAC2 | | 7.93 | 1.91 | | | | | | | | |
| | 2-Wire Voice Grade Loop/ Line Port Combination (PBX) - Conversion - Switch with Change | | | UEPRG | USACC | | 7.93 | 1.91 | | | | | | | | |
| ADDITIONAL NRCs | | | | | | | | | | | | | | | | |
| | 2-Wire Voice Grade Loop/ Line Port Combination (PBX) - Subsequent Activity | | | UEPRG | USAS2 | 0.00 | 0.00 | 0.00 | | | | | | | | |
| | PBX Subsequent Activity - Change/Rearrange Multiline Hunt Group | | | | | | 7.34 | 7.34 | | | | | | | | |
| | Unbundled Miscellaneous Rate Element, Tag Loop at End User Premise | | | UEPRG | URETL | | 8.33 | 0.83 | | | | | | | | |
| OFF/ON PREMISES EXTENSION CHANNELS | | | | | | | | | | | | | | | | |
| | Local Channel Voice grade, per termination | | 1 | UEPRG | P2JHX | 16.68 | 105.98 | 68.43 | 53.05 | 10.61 | | | | | | |
| | Local Channel Voice grade, per termination | | 2 | UEPRG | P2JHX | 23.13 | 105.98 | 68.43 | 53.05 | 10.61 | | | | | | |
| | Local Channel Voice grade, per termination | | 3 | UEPRG | P2JHX | 28.46 | 105.98 | 68.43 | 53.05 | 10.61 | | | | | | |
| | Non-Wire Direct Serve Channel Voice Grade | | 1 | UEPRG | SDD2X | 17.74 | 131.88 | 62.06 | 90.70 | 13.42 | | | | | | |
| | Non-Wire Direct Serve Channel Voice Grade | | 2 | UEPRG | SDD2X | 25.16 | 65.94 | 31.03 | 45.35 | 6.71 | | | | | | |

| UNBUNDLED NETWORK ELEMENTS - South Carolina | | | | | | | | | | | | | | Attachment: 2 | | Exhibit: A | |
|---|---|---|---|---|---|---|---|---|---|---|---|---|---|---|---|---|---|
| CATEGORY | RATE ELEMENTS | Interim | Zone | BCS | USOC | RATES ($) | | | | | Svc Order Submitted Elec per LSR | Svc Order Submitted Manually per LSR | Incremental Charge - Manual Svc Order vs. Electronic-1st | Incremental Charge - Manual Svc Order vs. Electronic-Add'l | Incremental Charge - Manual Svc Order vs. Electronic-Disc 1st | Incremental Charge - Manual Svc Order vs. Electronic-Disc Add'l |
| | | | | | | Rec | Nonrecurring | | Nonrecurring Disconnect | | OSS Rates ($) | | | | | |
| | | | | | | | First | Add'l | First | Add'l | SOMEC | SOMAN | SOMAN | SOMAN | SOMAN | SOMAN |
| | Non-Wire Direct Serve Channel Voice Grade | | 3 | UEPRG | SDD2X | 29.58 | 65.94 | 31.03 | 45.35 | 6.71 | | | | | | |
| | **INTEROFFICE TRANSPORT** | | | | | | | | | | | | | | | |
| | Interoffice Transport - Dedicated - 2 Wire Voice Grade - Facility Termination | | | UEPRG | U1TV2 | 24.30 | 40.63 | 27.47 | 16.77 | 6.91 | | | | | | |
| | Interoffice Transport - Dedicated - 2 Wire Voice Grade - Per Mile or Fraction Mile | | | UEPRG | U1TVM | 0.0167 | 0.00 | 0.00 | | | | | | | | |
| | **2-WIRE VOICE GRADE LOOP WITH 2-WIRE LINE PORT (BUS - PBX)** | | | | | | | | | | | | | | | |
| | **UNE Port/Loop Combination Rates** | | | | | | | | | | | | | | | |
| | 2-Wire VG Loop/Port Combo - Zone 1 | | 1 | | | 14.89 | | | | | | | | | | |
| | 2-Wire VG Loop/Port Combo - Zone 2 | | 2 | | | 21.52 | | | | | | | | | | |
| | 2-Wire VG Loop/Port Combo - Zone 3 | | 3 | | | 27.17 | | | | | | | | | | |
| | **UNE Loop Rates** | | | | | | | | | | | | | | | |
| | 2-Wire Voice Grade Loop (SL 1) - Zone 1 | | 1 | UEPPX | UEPLX | 13.76 | | | | | | | | | | |
| | 2-Wire Voice Grade Loop (SL 1) - Zone 2 | | 2 | UEPPX | UEPLX | 20.38 | | | | | | | | | | |
| | 2-Wire Voice Grade Loop (SL 1) - Zone 3 | | 3 | UEPPX | UEPLX | 26.04 | | | | | | | | | | |
| | **2-Wire Voice Grade Line Port Rates (BUS - PBX)** | | | | | | | | | | | | | | | |
| | Line Side Unbundled Combination 2-Way PBX Trunk Port - Bus | | | UEPPX | UEPPC | 1.13 | 69.26 | 32.50 | 37.53 | 6.22 | | | | | | |
| | Line Side Unbundled Outward PBX Trunk Port - Bus | | | UEPPX | UEPPO | 1.13 | 69.26 | 32.50 | 37.53 | 6.22 | | | | | | |
| | Line Side Unbundled Incoming PBX Trunk Port - Bus | | | UEPPX | UEPP1 | 1.13 | 69.26 | 32.50 | 37.53 | 6.22 | | | | | | |
| | 2-Wire Voice Unbundled PBX LD Terminal Ports | | | UEPPX | UEPLD | 1.13 | 69.26 | 32.50 | 37.53 | 6.22 | | | | | | |
| | 2-Wire Voice Unbundled 2-Way Combination PBX Usage Port | | | UEPPX | UEPXA | 1.13 | 69.26 | 32.50 | 37.53 | 6.22 | | | | | | |
| | 2-Wire Voice Unbundled PBX Toll Terminal Hotel Ports | | | UEPPX | UEPXB | 1.13 | 69.26 | 32.50 | 37.53 | 6.22 | | | | | | |
| | 2-Wire Voice Unbundled PBX LD DDD Terminals Port | | | UEPPX | UEPXC | 1.13 | 69.26 | 32.50 | 37.53 | 6.22 | | | | | | |
| | 2-Wire Voice Unbundled PBX LD Terminal Switchboard Port | | | UEPPX | UEPXD | 1.13 | 69.26 | 32.50 | 37.53 | 6.22 | | | | | | |
| | 2-Wire Voice Unbundled PBX LD Terminal Switchboard IDD Capable Port | | | UEPPX | UEPXE | 1.13 | 69.26 | 32.50 | 37.53 | 6.22 | | | | | | |
| | 2-Wire Voice Unbundled 2-Way PBX Hotel/Hospital Economy Administrative Calling Port | | | UEPPX | UEPXL | 1.13 | 69.26 | 32.50 | 37.53 | 6.22 | | | | | | |
| | 2-Wire Voice Unbundled 2-Way PBX Hotel/Hospital Economy Room Calling Port | | | UEPPX | UEPXM | 1.13 | 69.26 | 32.50 | 37.53 | 6.22 | | | | | | |
| | 2-Wire Voice Unbundled 1-Way Outgoing PBX Hotel/Hospital Discount Room Calling Port | | | UEPPX | UEPXO | 1.13 | 69.26 | 32.50 | 37.53 | 6.22 | | | | | | |
| | 2-Wire Voice Unbundled 1-Way Outgoing PBX Measured Port | | | UEPPX | UEPXS | 1.13 | 69.26 | 32.50 | 37.53 | 6.22 | | | | | | |
| | 2-Wire Voice Unbundled 2-Way PBX South Carolina Area Plus Calling Port | | | UEPPX | UEPXT | 1.13 | 69.26 | 32.50 | 37.53 | 6.22 | | | | | | |
| | **LOCAL NUMBER PORTABILITY** | | | | | | | | | | | | | | | |
| | Local Number Portability (1 per port) | | | UEPPX | LNPCP | 3.15 | 0.00 | 0.00 | | | | | | | | |
| | **FEATURES** | | | | | | | | | | | | | | | |
| | All Features Offered | | | UEPPX | UEPVF | 3.04 | 0.00 | 0.00 | | | | | | | | |
| | **NONRECURRING CHARGES (NRCs) - CURRENTLY COMBINED** | | | | | | | | | | | | | | | |
| | 2-Wire Voice Grade Loop/ Line Port Combination (PBX) - Conversion - Switch-As-Is | | | UEPPX | USAC2 | | 7.93 | 1.91 | | | | | | | | |
| | 2-Wire Voice Grade Loop/ Line Port Combination (PBX) - Conversion - Switch with Change | | | UEPPX | USACC | | 7.93 | 1.91 | | | | | | | | |
| | **ADDITIONAL NRCs** | | | | | | | | | | | | | | | |
| | 2-Wire Voice Grade Loop/ Line Port Combination (PBX) - Subsequent Activity | | | UEPPX | USAS2 | 0.00 | 0.00 | 0.00 | | | | | | | | |
| | PBX Subsequent Activity - Change/Rearrange Multiline Hunt Group | | | | | | 7.34 | 7.34 | | | | | | | | |
| | Unbundled Miscellaneous Rate Element, Tag Loop at End User Premise | | | UEPPX | URETL | | 8.33 | 0.83 | | | | | | | | |
| | **OFF/ON PREMISES EXTENSION CHANNELS** | | | | | | | | | | | | | | | |
| | Local Channel Voice grade, per termination | | 1 | UEPPX | P2JHX | 16.68 | 105.98 | 68.43 | 53.05 | 10.61 | | | | | | |
| | Local Channel Voice grade, per termination | | 2 | UEPPX | P2JHX | 23.13 | 105.98 | 68.43 | 53.05 | 10.61 | | | | | | |
| | Local Channel Voice grade, per termination | | 3 | UEPPX | P2JHX | 28.46 | 105.98 | 68.43 | 53.05 | 10.61 | | | | | | |
| | Non-Wire Direct Serve Channel Voice Grade | | 1 | UEPPX | SDD2X | 17.74 | 131.88 | 62.06 | 90.70 | 13.42 | | | | | | |
| | Non-Wire Direct Serve Channel Voice Grade | | 2 | UEPPX | SDD2X | 25.16 | 65.94 | 31.03 | 45.35 | 6.71 | | | | | | |
| | Non-Wire Direct Serve Channel Voice Grade | | 3 | UEPPX | SDD2X | 29.58 | 65.94 | 31.03 | 45.35 | 6.71 | | | | | | |

| UNBUNDLED NETWORK ELEMENTS - South Carolina | | | | | | | | | | | | | Attachment: 2 | | Exhibit: A | |
|---|---|---|---|---|---|---|---|---|---|---|---|---|---|---|---|---|
| CATEGORY | RATE ELEMENTS | Interim | Zone | BCS | USOC | RATES ($) | | | | | Svc Order Submitted Elec per LSR | Svc Order Submitted Manually per LSR | Incremental Charge - Manual Svc Order vs. Electronic-1st | Incremental Charge - Manual Svc Order vs. Electronic-Add'l | Incremental Charge - Manual Svc Order vs. Electronic-Disc 1st | Incremental Charge - Manual Svc Order vs. Electronic-Disc Add'l |
| | | | | | | Rec | Nonrecurring | | Nonrecurring Disconnect | | OSS Rates ($) | | | | | |
| | | | | | | | First | Add'l | First | Add'l | SOMEC | SOMAN | SOMAN | SOMAN | SOMAN | SOMAN |
| INTEROFFICE TRANSPORT | | | | | | | | | | | | | | | | |
| | Interoffice Transport - Dedicated - 2 Wire Voice Grade - Facility Termination | | | UEPPX | U1TV2 | 24.30 | 40.63 | 27.47 | 16.77 | 6.91 | | | | | | |
| | Interoffice Transport - Dedicated - 2 Wire Voice Grade - Per Mile or Fraction Mile | | | UEPPX | U1TVM | 0.0167 | 0.00 | 0.00 | | | | | | | | |
| 2-WIRE VOICE GRADE LOOP WITH 2-WIRE ANALOG LINE COIN PORT | | | | | | | | | | | | | | | | |
| UNE Port/Loop Combination Rates | | | | | | | | | | | | | | | | |
| | 2-Wire VG Coin Port/Loop Combo – Zone 1 | | 1 | | | 14.89 | | | | | | | | | | |
| | 2-Wire VG Coin Port/Loop Combo – Zone 2 | | 2 | | | 21.52 | | | | | | | | | | |
| | 2-Wire VG Coin Port/Loop Combo – Zone 3 | | 3 | | | 27.17 | | | | | | | | | | |
| UNE Loop Rates | | | | | | | | | | | | | | | | |
| | 2-Wire Voice Grade Loop (SL1) - Zone 1 | | 1 | UEPCO | UEPLX | 13.76 | | | | | | | | | | |
| | 2-Wire Voice Grade Loop (SL1) - Zone 2 | | 2 | UEPCO | UEPLX | 20.38 | | | | | | | | | | |
| | 2-Wire Voice Grade Loop (SL1) - Zone 3 | | 3 | UEPCO | UEPLX | 26.04 | | | | | | | | | | |
| 2-Wire Voice Grade Line Ports (COIN) | | | | | | | | | | | | | | | | |
| | 2-Wire Coin 2-Way without Operator Screening and without Blocking (SC) | | | UEPCO | UEPSD | 1.13 | 40.30 | 19.90 | 24.98 | 6.65 | | | | | | |
| | 2-Wire Coin 2-Way with Operator Screening and Blocking: 011, 900/976, 1+DDD (SC) | | | UEPCO | UEPSA | 1.13 | 40.30 | 19.90 | 24.98 | 6.65 | | | | | | |
| | 2-Wire Coin 2-Way with Operator Screening and 011 Blocking (SC) | | | UEPCO | UEPSH | 1.13 | 40.30 | 19.90 | 24.98 | 6.65 | | | | | | |
| | 2-Wire Coin 2-Way with Operator Screening and 011 Blocking; with Dialing Parity (SC) | | | UEPCO | UEPSC | 1.13 | 40.30 | 19.90 | 24.98 | 6.65 | | | | | | |
| | 2-Wire Coin 2-Way with Operator Screening and: 900 Blocking: 900/976, 1+DDD, 011+, and Local (SC) | | | UEPCO | UEPCC | 1.13 | 40.30 | 19.90 | 24.98 | 6.65 | | | | | | |
| | 2-Wire Coin 2-W Operator Screen: 900 Block: 900/976, 1+DDD, 011+, Local; Enhanced Call OPT 3YV (SC) | | | UEPCO | UEPCE | 1.13 | 40.30 | 19.90 | 24.98 | 6.65 | | | | | | |
| | 2-Wire Coin 2-W Operator Screen: 900 Block: 900/976, 1+DDD, 011+, Local; Enhanced Call OPT AP7 (SC) | | | UEPCO | UEPCF | 1.13 | 40.30 | 19.90 | 24.98 | 6.65 | | | | | | |
| | 2-Wire Coin Outward without Blocking and without Operator Screening (SC) | | | UEPCO | UEPSG | 1.13 | 40.30 | 19.90 | 24.98 | 6.65 | | | | | | |
| | 2-Wire Coin Outward with Operator Screening and 011 Blocking (SC) | | | UEPCO | UEPSF | 1.13 | 40.30 | 19.90 | 24.98 | 6.65 | | | | | | |
| | 2-Wire Coin Outward with Operator Screening and Blocking: 011, 900/976, 1+DDD (SC) | | | UEPCO | UEPSJ | 1.13 | 40.30 | 19.90 | 24.98 | 6.65 | | | | | | |
| | 2-Wire Coin Outward with Operator Screening and Blocking: 900/976, 1+DDD, 011+, and Local (SC) | | | UEPCO | UEPCM | 1.13 | 40.30 | 19.90 | 24.98 | 6.65 | | | | | | |
| | 2-Wire Coin Out Operator Screen & Block: 900/976, 1+DDD, 011+, Local; Enhanced Calling OPT 3YW (SC) | | | UEPCO | UEPCP | 1.13 | 40.30 | 19.90 | 24.98 | 6.65 | | | | | | |
| | 2-Wire 2-Way Smartline with 900/976 (all states except LA) | | | UEPCO | UEPCK | 1.13 | 40.30 | 19.90 | 24.98 | 6.65 | | | | | | |
| | 2-Wire Coin Outward Smartline with 900/976 (all states except LA) | | | UEPCO | UEPCR | 1.13 | 40.30 | 19.90 | 24.98 | 6.65 | | | | | | |
| ADDITIONAL UNE COIN PORT/LOOP (RC) | | | | | | | | | | | | | | | | |
| | UNE Coin Port/Loop Combo Usage (Flat Rate) | | | UEPCO | URECU | 4.05 | 0.00 | 0.00 | 0.00 | 0.00 | | | | | | |
| LOCAL NUMBER PORTABILITY | | | | | | | | | | | | | | | | |
| | Local Number Portability (1 per port) | | | UEPCO | LNPCX | 0.35 | | | | | | | | | | |
| NONRECURRING CHARGES - CURRENTLY COMBINED | | | | | | | | | | | | | | | | |
| | 2-Wire Voice Grade Loop / Line Port Combination - Conversion - Switch-as-is | | | UEPCO | USAC2 | | 0.10 | 0.10 | | | | | | | | |
| | 2-Wire Voice Grade Loop / Line Port Combination - Conversion - Switch with change | | | UEPCO | USACC | | 0.10 | 0.10 | | | | | | | | |
| ADDITIONAL NRCs | | | | | | | | | | | | | | | | |
| | 2-Wire Voice Grade Loop/Line Port Combination - Subsequent Activity | | | UEPCO | USAS2 | | 0.00 | 0.00 | | | | | | | | |
| | Unbundled Miscellaneous Rate Element, Tag Loop at End User Premise | | | UEPCO | URETL | | 8.33 | 0.83 | | | | | | | | |
| 2-WIRE VOICE LOOP/ 2WIRE VOICE GRADE IO TRANSPORT/ 2-WIRE LINE PORT (RES) | | | | | | | | | | | | | | | | |
| UNE Port/Loop Combination Rates | | | | | | | | | | | | | | | | |
| | 2-Wire VG Loop/IO Tranport/Port Combo - Zone 1 | | 1 | | | 18.00 | | | | | | | | | | |

| UNBUNDLED NETWORK ELEMENTS - South Carolina | | | | | | | | | | | | | Attachment: 2 | | Exhibit: A | |
|---|---|---|---|---|---|---|---|---|---|---|---|---|---|---|---|---|
| CATEGORY | RATE ELEMENTS | Interim | Zone | BCS | USOC | RATES ($) | | | | | Svc Order Submitted Elec per LSR | Svc Order Submitted Manually per LSR | Incremental Charge - Manual Svc Order vs. Electronic-1st | Incremental Charge - Manual Svc Order vs. Electronic-Add'l | Incremental Charge - Manual Svc Order vs. Electronic-Disc 1st | Incremental Charge - Manual Svc Order vs. Electronic-Disc Add'l |
| | | | | | | Rec | Nonrecurring | | Nonrecurring Disconnect | | OSS Rates ($) | | | | | |
| | | | | | | | First | Add'l | First | Add'l | SOMEC | SOMAN | SOMAN | SOMAN | SOMAN | SOMAN |
| | 2-Wire VG Loop/IO Tranport/Port Combo - Zone 2 | | 2 | | | 24.45 | | | | | | | | | | |
| | 2-Wire VG Loop/IO Tranport/Port Combo - Zone 3 | | 3 | | | 29.78 | | | | | | | | | | |
| **UNE Loop Rates** | | | | | | | | | | | | | | | | |
| | 2-Wire Voice Grade Loop (SL2) - Zone 1 | | 1 | UEPFR | UECF2 | 16.68 | | | | | | | | | | |
| | 2-Wire Voice Grade Loop (SL2) - Zone 2 | | 2 | UEPFR | UECF2 | 23.13 | | | | | | | | | | |
| | 2-Wire Voice Grade Loop (SL2) - Zone 3 | | 3 | UEPFR | UECF2 | 28.46 | | | | | | | | | | |
| **2-Wire Voice Grade Line Port Rates (Res)** | | | | | | | | | | | | | | | | |
| | 2-Wire voice unbundled port - residence | | | UEPFR | UEPRL | 1.32 | 108.36 | 70.71 | 1.42 | 1.33 | | | | | | |
| | 2-Wire voice unbundled port with Caller ID - res | | | UEPFR | UEPRC | 1.32 | 108.36 | 70.71 | 1.42 | 1.33 | | | | | | |
| | 2-Wire voice unbundled port outgoing only - res | | | UEPFR | UEPRO | 1.32 | 108.36 | 70.71 | 1.42 | 1.33 | | | | | | |
| | 2-Wire voice Grade unbundled South Carolina extended local dialing parity port with Caller ID - res | | | UEPFR | UEPAU | 1.32 | 108.36 | 70.71 | 1.42 | 1.33 | | | | | | |
| | 2-Wire voice unbundled South Carolina Area Calling port with Caller ID - res (LW8) | | | UEPFR | UEPAJ | 1.32 | 108.36 | 70.71 | 1.42 | 1.33 | | | | | | |
| | 2-Wire voice unbundles res, low usage line port with Caller ID (LUM) | | | UEPFR | UEPAP | 1.32 | 108.36 | 70.71 | 1.42 | 1.33 | | | | | | |
| | 2-Wire Voice Unbundled South Carolina Residence Dialing Plan without Caller ID | | | UEPFR | UEPWL | 1.32 | 108.36 | 70.71 | 1.42 | 1.33 | | | | | | |
| **INTEROFFICE TRANSPORT** | | | | | | | | | | | | | | | | |
| | Interoffice Transport - Dedicated - 2 Wire Voice Grade - Facility Termination | | | UEPFR | U1TV2 | 19.44 | 40.63 | 27.47 | 16.77 | 6.91 | | | | | | |
| | Interoffice Transport - Dedicated - 2 Wire Voice Grade - Per Mile or Fraction Mile | | | UEPFR | 1L5XX | 0.0134 | | | | | | | | | | |
| **FEATURES** | | | | | | | | | | | | | | | | |
| | All Features Offered | | | UEPFR | UEPVF | 3.04 | 0.00 | 0.00 | | | | | | | | |
| **LOCAL NUMBER PORTABILITY** | | | | | | | | | | | | | | | | |
| | Local Number Portability (1 per port) | | | UEPFR | LNPCX | 0.35 | | | | | | | | | | |
| **NONRECURRING CHARGES (NRCs) - CURRENTLY COMBINED** | | | | | | | | | | | | | | | | |
| | 2-Wire Loop / Dedicated IO Transport / 2 Wire Line Port Combination - Conversion - Switch-as-is | | | UEPFR | USAC2 | | 8.50 | 1.87 | | | | | | | | |
| | 2-Wire Loop / Dedicated IO Transport / 2 Wire Line Port Combination - Conversion - Switch-With-Change | | | UEPFR | USACC | | 8.50 | 1.87 | | | | | | | | |
| | Unbundled Miscellaneous Rate Element, Tag Designed Loop at End User Premise | | | UEPFR | URETN | | 11.24 | 1.10 | | | | | | | | |
| **2-WIRE VOICE LOOP/ 2WIRE VOICE GRADE IO TRANSPORT/ 2-WIRE LINE PORT (BUS)** | | | | | | | | | | | | | | | | |
| **UNE Port/Loop Combination Rates** | | | | | | | | | | | | | | | | |
| | 2-Wire VG Loop/IO Tranport/Port Combo - Zone 1 | | 1 | | | 18.00 | | | | | | | | | | |
| | 2-Wire VG Loop/IO Tranport/Port Combo - Zone 2 | | 2 | | | 24.45 | | | | | | | | | | |
| | 2-Wire VG Loop/IO Tranport/Port Combo - Zone 3 | | 3 | | | 29.78 | | | | | | | | | | |
| **UNE Loop Rates** | | | | | | | | | | | | | | | | |
| | 2-Wire Voice Grade Loop (SL2) - Zone 1 | | 1 | UEPFB | UECF2 | 16.68 | | | | | | | | | | |
| | 2-Wire Voice Grade Loop (SL2) - Zone 2 | | 2 | UEPFB | UECF2 | 23.13 | | | | | | | | | | |
| | 2-Wire Voice Grade Loop (SL2) - Zone 3 | | 3 | UEPFB | UECF2 | 28.46 | | | | | | | | | | |
| **2-Wire Voice Grade Line Port (Bus)** | | | | | | | | | | | | | | | | |
| | 2-Wire voice unbundled port without Caller ID - bus | | | UEPFB | UEPBL | 1.32 | 108.36 | 70.71 | 1.42 | 1.33 | | | | | | |
| | 2-Wire voice unbundled port with Caller + E484 ID - bus | | | UEPFB | UEPBC | 1.32 | 108.36 | 70.71 | 1.42 | 1.33 | | | | | | |
| | 2-Wire voice unbundled port outgoing only - bus | | | UEPFB | UEPBO | 1.32 | 108.36 | 70.71 | 1.42 | 1.33 | | | | | | |
| | 2-Wire voice Grade unbundled South Carolina extended local dialing parity port with Caller ID - bus | | | UEPFB | UEPAZ | 1.32 | 108.36 | 70.71 | 1.42 | 1.33 | | | | | | |
| | 2-Wire voice unbundled incoming only port with Caller ID - Bus | | | UEPFB | UEPB1 | 1.32 | 108.36 | 70.71 | 1.42 | 1.33 | | | | | | |
| | 2-Wire voice unbundled South Carolina Bus Area Calling Port with Caller ID (LMB) | | | UEPFB | UEPAB | 1.32 | 108.36 | 70.71 | 1.42 | 1.33 | | | | | | |
| | 2-Wire Voice Unbundled South Carolina Business Dialing Plan without Caller ID | | | UEPFB | UEPWM | 1.32 | 108.36 | 70.71 | 1.42 | 1.33 | | | | | | |
| **LOCAL NUMBER PORTABILITY** | | | | | | | | | | | | | | | | |
| | Local Number Portability (1 per port) | | | UEPFB | LNPCX | 0.35 | | | | | | | | | | |
| **INTEROFFICE TRANSPORT** | | | | | | | | | | | | | | | | |
| | Interoffice Transport - Dedicated - 2 Wire Voice Grade - Facility Termination | | | UEPFB | U1TV2 | 19.44 | 40.63 | 27.47 | 16.77 | 6.91 | | | | | | |

| UNBUNDLED NETWORK ELEMENTS - South Carolina | | | | | | | | | | | | | | Attachment: 2 | | Exhibit: A | |
|---|---|---|---|---|---|---|---|---|---|---|---|---|---|---|---|---|---|
| CATEGORY | RATE ELEMENTS | Interim | Zone | BCS | USOC | RATES ($) | | | | | Svc Order Submitted Elec per LSR | Svc Order Submitted Manually per LSR | Incremental Charge - Manual Svc Order vs. Electronic-1st | Incremental Charge - Manual Svc Order vs. Electronic-Add'l | Incremental Charge - Manual Svc Order vs. Electronic-Disc 1st | Incremental Charge - Manual Svc Order vs. Electronic-Disc Add'l |
| | | | | | | Rec | Nonrecurring | | Nonrecurring Disconnect | | OSS Rates ($) | | | | | |
| | | | | | | | First | Add'l | First | Add'l | SOMEC | SOMAN | SOMAN | SOMAN | SOMAN | SOMAN |
| | Interoffice Transport - Dedicated - 2 Wire Voice Grade - Per Mile or Fraction Mile | | | UEPFB | 1L5XX | 0.0134 | | | | | | | | | | |
| FEATURES | | | | | | | | | | | | | | | | |
| | All Features Offered | | | UEPFB | UEPVF | 3.04 | 0.00 | 0.00 | | | | | | | | |
| NONRECURRING CHARGES (NRCs) - CURRENTLY COMBINED | | | | | | | | | | | | | | | | |
| | 2-Wire Loop / Dedicated IO Transport / 2 Wire Line Port Combination - Conversion - Switch-as-is | | | UEPFB | USAC2 | | 8.50 | 1.87 | | | | | | | | |
| | 2-Wire Loop / Dedicated IO Transport / 2 Wire Line Port Combination - Conversion - Switch with change | | | UEPFB | USACC | | 8.50 | 1.87 | | | | | | | | |
| | Unbundled Miscellaneous Rate Element, Tag Designed Loop at End User Premise | | | UEPFB | URETN | | 11.24 | 1.10 | | | | | | | | |
| 2-WIRE VOICE LOOP/ 2WIRE VOICE GRADE IO TRANSPORT/ 2-WIRE LINE PORT (PBX) | | | | | | | | | | | | | | | | |
| UNE Port/Loop Combination Rates | | | | | | | | | | | | | | | | |
| | 2-Wire VG Loop/IO Tranport/Port Combo - Zone 1 | | 1 | | | 18.00 | | | | | | | | | | |
| | 2-Wire VG Loop/IO Tranport/Port Combo - Zone 2 | | 2 | | | 24.45 | | | | | | | | | | |
| | 2-Wire VG Loop/IO Tranport/Port Combo - Zone 3 | | 3 | | | 29.78 | | | | | | | | | | |
| UNE Loop Rates | | | | | | | | | | | | | | | | |
| | 2-Wire Voice Grade Loop (SL2) - Zone 1 | | 1 | UEPFP | UECF2 | 16.68 | | | | | | | | | | |
| | 2-Wire Voice Grade Loop (SL2) - Zone 2 | | 2 | UEPFP | UECF2 | 23.13 | | | | | | | | | | |
| | 2-Wire Voice Grade Loop (SL2) - Zone 3 | | 3 | UEPFP | UECF2 | 28.46 | | | | | | | | | | |
| 2-Wire Voice Grade Line Port Rates (BUS - PBX) | | | | | | | | | | | | | | | | |
| | Line Side Unbundled Combination 2-Way PBX Trunk Port - Bus | | | UEPFP | UEPPC | 1.32 | 137.32 | 83.31 | 67.02 | 11.51 | | | | | | |
| | Line Side Unbundled Outward PBX Trunk Port - Bus | | | UEPFP | UEPPO | 1.32 | 137.32 | 83.31 | 67.02 | 11.51 | | | | | | |
| | Line Side Unbundled Incoming PBX Trunk Port - Bus | | | UEPFP | UEPP1 | 1.32 | 137.32 | 83.31 | 67.02 | 11.51 | | | | | | |
| | 2-Wire Voice Unbundled PBX LD Terminal Ports | | | UEPFP | UEPLD | 1.32 | 137.32 | 83.31 | 67.02 | 11.51 | | | | | | |
| | 2-Wire Voice Unbundled 2-Way Combination PBX Usage Port | | | UEPFP | UEPXA | 1.32 | 137.32 | 83.31 | 67.02 | 11.51 | | | | | | |
| | 2-Wire Voice Unbundled PBX Toll Terminal Hotel Ports | | | UEPFP | UEPXB | 1.32 | 137.32 | 83.31 | 67.02 | 11.51 | | | | | | |
| | 2-Wire Voice Unbundled PBX LD DDD Terminals Port | | | UEPFP | UEPXC | 1.32 | 137.32 | 83.31 | 67.02 | 11.51 | | | | | | |
| | 2-Wire Voice Unbundled PBX LD Terminal Switchboard Port | | | UEPFP | UEPXD | 1.32 | 137.32 | 83.31 | 67.02 | 11.51 | | | | | | |
| | 2-Wire Voice Unbundled PBX LD Terminal Switchboard IDD Capable Port | | | UEPFP | UEPXE | 1.32 | 137.32 | 83.31 | 67.02 | 11.51 | | | | | | |
| | 2-Wire Voice Unbundled 2-Way PBX Hotel/Hospital Economy Administrative Calling Port | | | UEPFP | UEPXL | 1.32 | 137.32 | 83.31 | 67.02 | 11.51 | | | | | | |
| | 2-Wire Voice Unbundled 2-Way PBX Hotel/Hospital Economy Room Calling Port | | | UEPFP | UEPXM | 1.32 | 137.32 | 83.31 | 67.02 | 11.51 | | | | | | |
| | 2-Wire Voice Unbundled 1-Way Outgoing PBX Hotel/Hospital Discount Room Calling Port | | | UEPFP | UEPXO | 1.32 | 137.32 | 83.31 | 67.02 | 11.51 | | | | | | |
| | 2-Wire Voice Unbundled 1-Way Outgoing PBX Measured Port | | | UEPFP | UEPXS | 1.32 | 137.32 | 83.31 | 67.02 | 11.51 | | | | | | |
| | 2-Wire Voice Unbundled 2-Way PBX South Carolina Area Plus Calling Port | | | UEPFP | UEPXT | 1.32 | 137.32 | 83.31 | 67.02 | 11.51 | | | | | | |
| LOCAL NUMBER PORTABILITY | | | | | | | | | | | | | | | | |
| | Local Number Portability (1 per port) | | | UEPFP | LNPCP | 3.15 | 0.00 | 0.00 | | | | | | | | |
| INTEROFFICE TRANSPORT | | | | | | | | | | | | | | | | |
| | Interoffice Transport - Dedicated - 2 Wire Voice Grade - Facility Termination | | | UEPFP | U1TV2 | 19.44 | 40.63 | 27.47 | 16.77 | 6.91 | | | | | | |
| | Interoffice Transport - Dedicated - 2 Wire Voice Grade - Per Mile or Fraction Mile | | | UEPFP | 1L5XX | 0.0134 | | | | | | | | | | |
| FEATURES | | | | | | | | | | | | | | | | |
| | All Features Offered | | | UEPFP | UEPVF | 3.04 | 0.00 | 0.00 | | | | | | | | |
| NONRECURRING CHARGES (NRCs) - CURRENTLY COMBINED | | | | | | | | | | | | | | | | |
| | 2-Wire Loop / Dedicated IO Transport / 2 Wire Line Port Combination - Conversion - Switch-as-is | | | UEPFP | USAC2 | | 8.50 | 1.87 | | | | | | | | |
| | 2-Wire Loop / Dedicated IO Transport / 2 Wire Line Port Combination - Conversion - Switch with change | | | UEPFP | USACC | | 8.50 | 1.87 | | | | | | | | |
| | Unbundled Miscellaneous Rate Element, Tag Designed Loop at End User Premise | | | UEPFP | URETN | | 11.24 | 1.10 | | | | | | | | |
| UNBUNDLED PORT/LOOP COMBINATIONS - COST BASED RATES | | | | | | | | | | | | | | | | |
| 2-WIRE VOICE GRADE LOOP- BUS ONLY - WITH 2-WIRE DID TRUNK PORT | | | | | | | | | | | | | | | | |

| UNBUNDLED NETWORK ELEMENTS - South Carolina | | | | | | | | | | | | | | Attachment: 2 | | Exhibit: A | |
|---|---|---|---|---|---|---|---|---|---|---|---|---|---|---|---|---|---|
| CATEGORY | RATE ELEMENTS | Interim | Zone | BCS | USOC | RATES ($) | | | | | Svc Order Submitted Elec per LSR | Svc Order Submitted Manually per LSR | Incremental Charge - Manual Svc Order vs. Electronic-1st | Incremental Charge - Manual Svc Order vs. Electronic-Add'l | Incremental Charge - Manual Svc Order vs. Electronic-Disc 1st | Incremental Charge - Manual Svc Order vs. Electronic-Disc Add'l |
| | | | | | | Rec | Nonrecurring | | Nonrecurring Disconnect | | OSS Rates ($) | | | | | |
| | | | | | | | First | Add'l | First | Add'l | SOMEC | SOMAN | SOMAN | SOMAN | SOMAN | SOMAN |
| UNE Port/Loop Combination Rates | | | | | | | | | | | | | | | | |
| | 2-Wire VG Loop/2-Wire DID Trunk Port Combo - UNE Zone 1 | | 1 | | | 23.75 | | | | | | | | | | |
| | 2-Wire VG Loop/2-Wire DID Trunk Port Combo - UNE Zone 2 | | 2 | | | 30.20 | | | | | | | | | | |
| | 2-Wire VG Loop/2-Wire DID Trunk Port Combo - UNE Zone 3 | | 3 | | | 35.52 | | | | | | | | | | |
| UNE Loop Rates | | | | | | | | | | | | | | | | |
| | 2-Wire Analog Voice Grade Loop - (SL2) - UNE Zone 1 | | 1 | UEPPX | UECD1 | 16.68 | | | | | | | | | | |
| | 2-Wire Analog Voice Grade Loop - (SL2) - UNE Zone 2 | | 2 | UEPPX | UECD1 | 23.13 | | | | | | | | | | |
| | 2-Wire Analog Voice Grade Loop - (SL2) - UNE Zone 3 | | 3 | UEPPX | UECD1 | 28.46 | | | | | | | | | | |
| UNE Port Rate | | | | | | | | | | | | | | | | |
| | Exchange Ports - 2-Wire DID Port | | | UEPPX | UEPD1 | 7.06 | 225.55 | 87.21 | 113.08 | 14.38 | | | | | | |
| NONRECURRING CHARGES - CURRENTLY COMBINED | | | | | | | | | | | | | | | | |
| | 2-Wire Voice Grade Loop / 2-Wire DID Trunk Port Combination - Switch-as-is | | | UEPPX | USAC1 | | 7.32 | 1.87 | | | | | | | | |
| | 2-Wire Voice Grade Loop / 2-Wire DID Trunk Port Conversion with BellSouth Allowable Changes | | | UEPPX | USA1C | | 7.32 | 1.87 | | | | | | | | |
| ADDITIONAL NRCs | | | | | | | | | | | | | | | | |
| | 2-Wire DID Subsequent Activity - Add Trunks, Per Trunk | | | UEPPX | USAS1 | | 26.84 | | | | | | | | | |
| | Unbundled Miscellaneous Rate Element, Tag Designed Loop at End User Premise | | | UEPPX | URETN | | 11.24 | 1.10 | | | | | | | | |
| Telephone Number/Trunk Group Establisment Charges | | | | | | | | | | | | | | | | |
| | DID Trunk Termination (One Per Port) | | | UEPPX | NDT | 0.00 | 0.00 | 0.00 | | | | | | | | |
| | DID Numbers, Establish Trunk Group and Provide First Group of 20 DID Numbers | | | UEPPX | NDZ | 0.00 | 0.00 | 0.00 | | | | | | | | |
| | Additional DID Numbers for each Group of 20 DID Numbers | | | UEPPX | ND4 | 0.00 | 0.00 | 0.00 | | | | | | | | |
| | DID Numbers, Non- consecutive DID Numbers , Per Number | | | UEPPX | ND5 | 0.00 | 0.00 | 0.00 | | | | | | | | |
| | Reserve Non-Consecutive DID numbers | | | UEPPX | ND6 | 0.00 | 0.00 | 0.00 | | | | | | | | |
| | Reserve DID Numbers | | | UEPPX | NDV | 0.00 | 0.00 | 0.00 | | | | | | | | |
| LOCAL NUMBER PORTABILITY | | | | | | | | | | | | | | | | |
| | Local Number Portability (1 per port) | | | UEPPX | LNPCP | 3.15 | 0.00 | 0.00 | | | | | | | | |
| 2-WIRE ISDN DIGITAL GRADE LOOP WITH 2-WIRE ISDN DIGITAL LINE SIDE PORT | | | | | | | | | | | | | | | | |
| UNE Port/Loop Combination Rates | | | | | | | | | | | | | | | | |
| | 2W ISDN Digital Grade Loop/2W ISDN Digital Line Side Port - UNE Zone 1 | | 1 | UEPPB UEPPR | | 30.86 | | | | | | | | | | |
| | 2W ISDN Digital Grade Loop/2W ISDN Digital Line Side Port - UNE Zone 2 | | 2 | UEPPB UEPPR | | 38.60 | | | | | | | | | | |
| | 2W ISDN Digital Grade Loop/2W ISDN Digital Line Side Port - UNE Zone 3 | | 3 | UEPPB UEPPR | | 44.23 | | | | | | | | | | |
| UNE Loop Rates | | | | | | | | | | | | | | | | |
| | 2-Wire ISDN Digital Grade Loop - UNE Zone 1 | | 1 | UEPPB UEPPR | USL2X | 21.90 | | | | | | | | | | |
| | 2-Wire ISDN Digital Grade Loop - UNE Zone 2 | | 2 | UEPPB UEPPR | USL2X | 29.64 | | | | | | | | | | |
| | 2-Wire ISDN Digital Grade Loop - UNE Zone 3 | | 3 | UEPPB UEPPR | USL2X | 35.27 | | | | | | | | | | |
| UNE Port Rate | | | | | | | | | | | | | | | | |
| | Exchange Port - 2-Wire ISDN Line Side Port | | | UEPPB UEPPR | UEPPB | 8.96 | 190.51 | 133.14 | 100.95 | 21.37 | | | | | | |
| NONRECURRING CHARGES - CURRENTLY COMBINED | | | | | | | | | | | | | | | | |
| | 2-Wire ISDN Digital Grade Loop / 2-Wire ISDN Line Side Port Combination - Conversion | | | UEPPB UEPPR | USACB | 0.00 | 38.59 | 27.08 | | | | | | | | |
| ADDITIONAL NRCs | | | | | | | | | | | | | | | | |
| | Unbundled Miscellaneous Rate Element, Tag Designed Loop at End User Premise | | | UEPPB UEPPR | URETN | | 11.24 | 1.10 | | | | | | | | |
| | Unbundled Miscellaneous Rate Element, Tag Loop at End User Premise | | | UEPPB UEPPR | URETL | | 8.33 | 0.83 | | | | | | | | |
| LOCAL NUMBER PORTABILITY | | | | | | | | | | | | | | | | |
| | Local Number Portability (1 per port) | | | UEPPB UEPPR | LNPCX | 0.35 | 0.00 | 0.00 | | | | | | | | |
| B-CHANNEL USER PROFILE ACCESS: | | | | | | | | | | | | | | | | |
| | CVS/CSD (DMS/5ESS) | | | UEPPB UEPPR | U1UCA | 0.00 | 0.00 | 0.00 | | | | | | | | |
| | CVS (EWSD) | | | UEPPB UEPPR | U1UCB | 0.00 | 0.00 | 0.00 | | | | | | | | |
| | CSD | | | UEPPB UEPPR | U1UCC | 0.00 | 0.00 | 0.00 | | | | | | | | |
| B-CHANNEL AREA PLUS USER PROFILE ACCESS: (AL,KY,LA,MS SC,MS, & TN) | | | | | | | | | | | | | | | | |

| UNBUNDLED NETWORK ELEMENTS - South Carolina | | | | | | | | | | | | | | Attachment: 2 | | Exhibit: A | |
|---|---|---|---|---|---|---|---|---|---|---|---|---|---|---|---|---|---|
| CATEGORY | RATE ELEMENTS | Interim | Zone | BCS | USOC | RATES ($) | | | | | Svc Order Submitted Elec per LSR | Svc Order Submitted Manually per LSR | Incremental Charge - Manual Svc Order vs. Electronic-1st | Incremental Charge - Manual Svc Order vs. Electronic-Add'l | Incremental Charge - Manual Svc Order vs. Electronic-Disc 1st | Incremental Charge - Manual Svc Order vs. Electronic-Disc Add'l |
| | | | | | | Rec | Nonrecurring | | Nonrecurring Disconnect | | OSS Rates ($) | | | | | |
| | | | | | | | First | Add'l | First | Add'l | SOMEC | SOMAN | SOMAN | SOMAN | SOMAN | SOMAN |
| | CVS/CSD (DMS/5ESS) | | | UEPPB UEPPR | U1UCD | 0.00 | 0.00 | 0.00 | | | | | | | | |
| | CVS (EWSD) | | | UEPPB UEPPR | U1UCE | 0.00 | 0.00 | 0.00 | | | | | | | | |
| | CSD | | | UEPPB UEPPR | U1UCF | 0.00 | 0.00 | 0.00 | | | | | | | | |
| USER TERMINAL PROFILE | | | | | | | | | | | | | | | | |
| | User Terminal Profile (EWSD only) | | | UEPPB UEPPR | U1UMA | 0.00 | 0.00 | 0.00 | | | | | | | | |
| VERTICAL FEATURES | | | | | | | | | | | | | | | | |
| | All Vertical Features - One per Channel B User Profile | | | UEPPB UEPPR | UEPVF | 3.04 | 0.00 | 0.00 | | | | | | | | |
| INTEROFFICE CHANNEL MILEAGE | | | | | | | | | | | | | | | | |
| | Interoffice Channel mileage each, including first mile and facilities termination | | | UEPPB UEPPR | M1GNC | 24.30 | 40.63 | 27.47 | 16.77 | 6.91 | | | | | | |
| | Interoffice Channel mileage each, additional mile | | | UEPPB UEPPR | M1GNM | 0.0167 | 0.00 | 0.00 | | | | | | | | |
| 4-WIRE DS1 DIGITAL LOOP WITH 4-WIRE ISDN DS1 DIGITAL TRUNK PORT | | | | | | | | | | | | | | | | |
| The UNE-P DS1 combination rates below for in this rate exhibit apply to the embedded base in place as of 10/2/03 until 4/1/04. After 4/1/04 these rates shall revert to tariff rates or a separate commercial agreement. | | | | | | | | | | | | | | | | |
| Requests for 4-Wire DS1 Digital Loop with 4-Wire ISDN DS1 Digital Trunk Port after the effective date of this amendment shall be provided pursuant to a separate agreement or tariff at BellSouth's discretion. | | | | | | | | | | | | | | | | |
| UNE Port/Loop Combination Rates | | | | | | | | | | | | | | | | |
| | 4W DS1 Digital Loop/4W ISDN DS1 Digital Trunk Port - UNE Zone 1 | | 1 | UEPPP | | 176.82 | | | | | | | | | | |
| | 4W DS1 Digital Loop/4W ISDN DS1 Digital Trunk Port - UNE Zone 2 | | 2 | UEPPP | | 241.38 | | | | | | | | | | |
| | 4W DS1 Digital Loop/4W ISDN DS1 Digital Trunk Port - UNE Zone 3 | | 3 | UEPPP | | 347.84 | | | | | | | | | | |
| UNE Loop Rates | | | | | | | | | | | | | | | | |
| | 4-Wire DS1 Digital Loop - UNE Zone 1 | | 1 | UEPPP | USL4P | 90.87 | | | | | | | | | | |
| | 4-Wire DS1 Digital Loop - UNE Zone 2 | | 2 | UEPPP | USL4P | 155.43 | | | | | | | | | | |
| | 4-Wire DS1 Digital Loop - UNE Zone 3 | | 3 | UEPPP | USL4P | 261.89 | | | | | | | | | | |
| UNE Port Rate | | | | | | | | | | | | | | | | |
| | Exchange Ports - 4-Wire ISDN DS1 Port (E:4/1/2004) | | | UEPPP | UEPPP | 85.95 | 457.30 | 259.67 | 124.15 | 31.83 | | | | | | |
| NONRECURRING CHARGES - CURRENTLY COMBINED | | | | | | | | | | | | | | | | |
| | 4-Wire DS1 Digital Loop / 4-Wire ISDN DS1 Digital Trunk Port Combination - Conversion -Switch-as-is (E:4/1/2004) | | | UEPPP | USACP | 0.00 | 119.34 | 78.73 | | | | | | | | |
| ADDITIONAL NRCs | | | | | | | | | | | | | | | | |
| | 4-Wire DS1 Loop/4-W ISDN Digtl Trk Port - Subsqt Actvy-Inward/two way Tel Nos. (except NC) | | | UEPPP | PR7TF | | 0.49 | 0.49 | | | | | | | | |
| | 4-Wire DS1 Loop / 4-Wire ISDN DS1 Digital Trunk Port - Outward Tel Numbers (All States except NC) | | | UEPPP | PR7TO | | 11.54 | 11.54 | | | | | | | | |
| | 4-Wire DS1 Loop / 4-Wire ISDN DS1 Digital Trk Port - Subsequent Inward Tel Numbers | | | UEPPP | PR7ZT | | 23.07 | 23.07 | | | | | | | | |
| LOCAL NUMBER PORTABILITY | | | | | | | | | | | | | | | | |
| | Local Number Portability (1 per port) | | | UEPPP | LNPCN | 1.75 | | | | | | | | | | |
| | Voice/Data | | | UEPPP | PR71V | 0.00 | 0.00 | 0.00 | | | | | | | | |
| | Digital Data | | | UEPPP | PR71D | 0.00 | 0.00 | 0.00 | | | | | | | | |
| | Inward Data | | | UEPPP | PR71E | 0.00 | 0.00 | 0.00 | | | | | | | | |
| New or Additional "B" Channel | | | | | | | | | | | | | | | | |
| | New or Additional - Voice/Data B Channel | | | UEPPP | PR7BV | 0.00 | 14.56 | | | | | | | | | |
| | New or Additional - Digital Data B Channel | | | UEPPP | PR7BF | 0.00 | 14.56 | | | | | | | | | |
| | New or Additional Inward Data B Channel | | | UEPPP | PR7BD | 0.00 | 14.56 | | | | | | | | | |
| CALL TYPES | | | | | | | | | | | | | | | | |
| | Inward | | | UEPPP | PR7C1 | 0.00 | 0.00 | 0.00 | | | | | | | | |
| | Outward | | | UEPPP | PR7CO | 0.00 | 0.00 | 0.00 | | | | | | | | |
| | Two-way | | | UEPPP | PR7CC | 0.00 | 0.00 | 0.00 | | | | | | | | |
| Interoffice Channel Mileage | | | | | | | | | | | | | | | | |
| | Fixed Each Including First Mile | | | UEPPP | 1LN1A | 77.4815 | 89.47 | 81.99 | 16.39 | 14.48 | | | | | | |
| | Each Airline-Fractional Additional Mile | | | UEPPP | 1LN1B | 0.3415 | | | | | | | | | | |
| 4-WIRE DS1 DIGITAL LOOP WITH 4-WIRE DDITS TRUNK PORT | | | | | | | | | | | | | | | | |
| The UNE-P DS1 combination rates below for in this rate exhibit apply to the embedded base in place as of 10/2/03 until 4/1/04. After 4/1/04 these rates shall revert to tariff rates or a separate commercial agreement. | | | | | | | | | | | | | | | | |
| Requests for 4-Wire DS1 Digital Loop with 4-Wire DDITS after the effective date of this amendment shall be provided pursuant to a separate agreement or tariff at BellSouth's discretion. | | | | | | | | | | | | | | | | |
| UNE Port/Loop Combination Rates | | | | | | | | | | | | | | | | |
| | 4W DS1 Digital Loop/4W DDITS Trunk Port - UNE Zone 1 | | 1 | UEPDC | | 149.77 | | | | | | | | | | |
| | 4W DS1 Digital Loop/4W DDITS Trunk Port - UNE Zone 2 | | 2 | UEPDC | | 214.33 | | | | | | | | | | |

| UNBUNDLED NETWORK ELEMENTS - South Carolina | | | | | | | | | | | | | | Attachment: 2 | | Exhibit: A | |
|---|---|---|---|---|---|---|---|---|---|---|---|---|---|---|---|---|---|
| CATEGORY | RATE ELEMENTS | Interim | Zone | BCS | USOC | RATES ($) | | | | | Svc Order Submitted Elec per LSR | Svc Order Submitted Manually per LSR | Incremental Charge - Manual Svc Order vs. Electronic-1st | Incremental Charge - Manual Svc Order vs. Electronic-Add'l | Incremental Charge - Manual Svc Order vs. Electronic-Disc 1st | Incremental Charge - Manual Svc Order vs. Electronic-Disc Add'l |
| | | | | | | Rec | Nonrecurring | | Nonrecurring Disconnect | | OSS Rates ($) | | | | | |
| | | | | | | | First | Add'l | First | Add'l | SOMEC | SOMAN | SOMAN | SOMAN | SOMAN | SOMAN |
| | 4W DS1 Digital Loop/4W DDITS Trunk Port - UNE Zone 3 | | 3 | UEPDC | | 320.78 | | | | | | | | | | |
| | **UNE Loop Rates** | | | | | | | | | | | | | | | |
| | 4-Wire DS1 Digital Loop - UNE Zone 1 | | 1 | UEPDC | USLDC | 90.87 | | | | | | | | | | |
| | 4-Wire DS1 Digital Loop - UNE Zone 2 | | 2 | UEPDC | USLDC | 155.43 | | | | | | | | | | |
| | 4-Wire DS1 Digital Loop - UNE Zone 3 | | 3 | UEPDC | USLDC | 261.89 | | | | | | | | | | |
| | **UNE Port Rate** | | | | | | | | | | | | | | | |
| | 4-Wire DDITS Digital Trunk Port (E:4/1/2004) | | | UEPDC | UDD1T | 58.90 | 455.50 | 253.79 | 117.55 | 14.20 | | | | | | |
| | **NONRECURRING CHARGES - CURRENTLY COMBINED** | | | | | | | | | | | | | | | |
| | 4-Wire DS1 Digital Loop / 4-Wire DDITS Trunk Port Combination - Switch-as-Is (E:4/1/2004) | | | UEPDC | USAC4 | | 129.78 | 67.17 | | | | | | | | |
| | 4-Wire DS1 Digital Loop / 4-Wire DDITS Trunk Port Combination - Conversion with DS1 Changes (E:4/1/2004) | | | UEPDC | USAWA | | 129.78 | 67.17 | | | | | | | | |
| | 4-Wire DS1 Digital Loop / 4-Wire DDITS Trunk Port Combination - Conversion with Change - Trunk (E:4/1/2004) | | | UEPDC | USAWB | | 129.78 | 67.17 | | | | | | | | |
| | **ADDITIONAL NRCs** | | | | | | | | | | | | | | | |
| | 4-Wire DS1 Loop / 4-Wire DDITS Trunk Port - NRC - Subsequent Channel Activation/Chan - 2-Way Trunk | | | UEPDC | UDTTA | | 14.51 | 14.51 | | | | | | | | |
| | 4-Wire DS1 Loop / 4-Wire DDITS Trunk Port - Subsequent Channel Activation/Chan - 1-Way Outward Trunk | | | UEPDC | UDTTB | | 14.51 | 14.51 | | | | | | | | |
| | 4-Wire DS1 Loop / 4-Wire DDITS Trunk Port - Subsqnt Channel Activation/Chan Inward Trunk w/out DID | | | UEPDC | UDTTC | | 14.51 | 14.51 | | | | | | | | |
| | 4-Wire DS1 Loop / 4-Wire DDITS Trunk Port - Subsqnt Chan Activation Per Chan - Inward Trunk with DID | | | UEPDC | UDTTD | | 14.51 | 14.51 | | | | | | | | |
| | 4-Wire DS1 Loop / 4-Wire DDITS Trunk Port - Subsqnt Chan Activation / Chan - 2-Way DID w User Trans | | | UEPDC | UDTTE | | 14.51 | 14.51 | | | | | | | | |
| | **BIPOLAR 8 ZERO SUBSTITUTION** | | | | | | | | | | | | | | | |
| | B8ZS -Superframe Format | | | UEPDC | CCOSF | | 0.00i | 605.00s | | | | | | | | |
| | B8ZS - Extended Superframe Format | | | UEPDC | CCOEF | | 0.00i | 605.00s | | | | | | | | |
| | **Alternate Mark Inversion** | | | | | | | | | | | | | | | |
| | AMI -Superframe Format | | | UEPDC | MCOSF | | 0.00 | 0.00 | | | | | | | | |
| | AMI - Extended SuperFrame Format | | | UEPDC | MCOPO | | 0.00 | 0.00 | | | | | | | | |
| | **Telephone Number/Trunk Group Establisment Charges** | | | | | | | | | | | | | | | |
| | Telephone Number for 2-Way Trunk Group | | | UEPDC | UDTGX | 0.00 | | | | | | | | | | |
| | Telephone Number for 1-Way Outward Trunk Group | | | UEPDC | UDTGY | 0.00 | | | | | | | | | | |
| | Telephone Number for 1-Way Inward Trunk Group Without DID | | | UEPDC | UDTGZ | 0.00 | | | | | | | | | | |
| | DID Numbers, Establish Trunk Group and Provide First Group of 20 DID Numbers | | | UEPDC | NDZ | 0.00 | 0.00 | 0.00 | | | | | | | | |
| | DID Numbers for each Group of 20 DID Numbers | | | UEPDC | ND4 | 0.00 | | | | | | | | | | |
| | DID Numbers, Non- consecutive DID Numbers , Per Number | | | UEPDC | ND5 | 0.00 | 0.00 | 0.00 | | | | | | | | |
| | Reserve Non-Consecutive DID Nos. | | | UEPDC | ND6 | 0.00 | 0.00 | 0.00 | | | | | | | | |
| | Reserve DID Numbers | | | UEPDC | NDV | 0.00 | 0.00 | 0.00 | | | | | | | | |
| | **Dedicated DS1 (Interoffice Channel Mileage) - FX/FCO for 4-Wire DS1 Digital Loop with 4-Wire DDITS Trunk Port** | | | | | | | | | | | | | | | |
| | Interoffice Channel Mileage - Fixed rate 0-8 miles (Facilities Termination) | | | UEPDC | 1LNO1 | 77.14 | 89.47 | 81.99 | 16.39 | 14.48 | | | | | | |
| | Interoffice Channel Mileage - Additional rate per mile - 0-8 miles | | | UEPDC | 1LNOA | 0.3415 | 0.00 | 0.00 | | | | | | | | |
| | Interoffice Channel Mileage - Fixed rate 9-25 miles (Facilities Termination) | | | UEPDC | 1LNO2 | 0.00 | 0.00 | 0.00 | | | | | | | | |
| | Interoffice Channel Mileage - Additional rate per mile - 9-25 miles | | | UEPDC | 1LNOB | 0.3415 | 0.00 | 0.00 | | | | | | | | |
| | Interoffice Channel Mileage - Fixed rate 25+ miles (Facilities Termination) | | | UEPDC | 1LNO3 | 0.00 | 0.00 | 0.00 | | | | | | | | |
| | Interoffice Channel Mileage - Additional rate per mile - 25+ miles | | | UEPDC | 1LNOC | 0.3415 | 0.00 | 0.00 | | | | | | | | |
| | Local Number Portability, per DS0 Activated | | | UEPDC | LNPCP | 3.15 | 0.00 | 0.00 | | | | | | | | |
| | Central Office Termininating Point | | | UEPDC | CTG | 0.00 | | | | | | | | | | |
| | **4-WIRE DS1 LOOP WITH CHANNELIZATION WITH PORT** | | | | | | | | | | | | | | | |
| | **System is 1 DS1 Loop, 1 D4 Channel Bank, and up to 24 Feature Activations** | | | | | | | | | | | | | | | |
| | **Each System can have up to 24 combinations of rates depending on type and number of ports used** | | | | | | | | | | | | | | | |

| UNBUNDLED NETWORK ELEMENTS - South Carolina | | | | | | | | | | | | | Attachment: 2 | | Exhibit: A | |
|---|---|---|---|---|---|---|---|---|---|---|---|---|---|---|---|---|
| CATEGORY | RATE ELEMENTS | Interim | Zone | BCS | USOC | RATES ($) | | | | | Svc Order Submitted Elec per LSR | Svc Order Submitted Manually per LSR | Incremental Charge - Manual Svc Order vs. Electronic-1st | Incremental Charge - Manual Svc Order vs. Electronic-Add'l | Incremental Charge - Manual Svc Order vs. Electronic-Disc 1st | Incremental Charge - Manual Svc Order vs. Electronic-Disc Add'l |
| | | | | | | Rec | Nonrecurring | | Nonrecurring Disconnect | | OSS Rates ($) | | | | | |
| | | | | | | | First | Add'l | First | Add'l | SOMEC | SOMAN | SOMAN | SOMAN | SOMAN | SOMAN |
| | The UNE-P DS1 combination rates below for 4-Wire DS1 Loop with Channelization with Port in this rate exhibit apply to the embedded base in place as of 10/2/03 until 4/1/04. After 4/1/04 these rates shall revert to tariff rates or a separate agreement. | | | | | | | | | | | | | | | |
| | Requests for 4-Wire DS1 Loop with Channelization with Port after the effective date of this amendment shall be provided pursuant to a separate agreement or tariff at BellSouth's discretion. | | | | | | | | | | | | | | | |
| | UNE DS1 Loop | | | | | | | | | | | | | | | |
| | 4-Wire DS1 Loop - UNE Zone 1 | | 1 | UEPMG | USLDC | 90.87 | 0.00 | 0.00 | | | | | | | | |
| | 4-Wire DS1 Loop - UNE Zone 2 | | 2 | UEPMG | USLDC | 155.43 | 0.00 | 0.00 | | | | | | | | |
| | 4-Wire DS1 Loop - UNE Zone 3 | | 3 | UEPMG | USLDC | 261.89 | 0.00 | 0.00 | | | | | | | | |
| | UNE DSO Channelization Capacities (D4 Channel Bank Configurations) | | | | | | | | | | | | | | | |
| | 24 DSO Channel Capacity - 1 per DS1 | | | UEPMG | VUM24 | 82.78 | 0.00 | 0.00 | | | | | | | | |
| | 48 DSO Channel Capacity - 1 per 2 DS1s | | | UEPMG | VUM48 | 165.56 | 0.00 | 0.00 | | | | | | | | |
| | 96 DSO Channel Capacity -1per 4 DS1s | | | UEPMG | VUM96 | 331.12 | 0.00 | 0.00 | | | | | | | | |
| | 144 DS0 Channel Capacity - 1 per 6 DS1s | | | UEPMG | VUM14 | 496.68 | 0.00 | 0.00 | | | | | | | | |
| | 192 DS0 Channel Capacity -1 per 8 DS1s | | | UEPMG | VUM19 | 662.24 | 0.00 | 0.00 | | | | | | | | |
| | 240 DS0 Channel Capacity - 1 per 10 DS1s | | | UEPMG | VUM2O | 827.80 | 0.00 | 0.00 | | | | | | | | |
| | 288 DS0 Channel Capacity - 1 per 12 DS1s | | | UEPMG | VUM28 | 993.36 | 0.00 | 0.00 | | | | | | | | |
| | 384 DS0 Channel Capacity - 1 per 16 DS1s | | | UEPMG | VUM38 | 1,324.48 | 0.00 | 0.00 | | | | | | | | |
| | 480 DS0 Channel Capacity - 1 per 20 DS1s | | | UEPMG | VUM4O | 1,655.60 | 0.00 | 0.00 | | | | | | | | |
| | 576 DS0 Channel Capacity -1 per 24 DS1s | | | UEPMG | VUM57 | 1,986.72 | 0.00 | 0.00 | | | | | | | | |
| | 672 DS0 Channel Capacity - 1 per 28 DS1s | | | UEPMG | VUM67 | 2,317.84 | 0.00 | 0.00 | | | | | | | | |
| | Non-Recurring Charges (NRC) Associated with 4-Wire DS1 Loop with Channeliztion with Port - Conversion Charge Based on a System | | | | | | | | | | | | | | | |
| | A Minimum System configuration is One (1) DS1, One (1) D4 Channel Bank, and Up To 24 DSO Ports with Feature Activations. | | | | | | | | | | | | | | | |
| | Multiples of this configuration functioning as one are considered Add'l after the minimum system configuration is counted. | | | | | | | | | | | | | | | |
| | NRC - Conversion (Currently Combined) with or without BellSouth Allowed Changes | | | UEPMG | USAC4 | 0.00 | 150.81 | 8.38 | | | | | | | | |
| | System Additions at End User Locations Where 4-Wire DS1 Loop with Channelization with Port Combination Currently Exists and | | | | | | | | | | | | | | | |
| | New (Not Currently Combined) in all states, except in Density Zone 1 of Top 8 MSA's | | | | | | | | | | | | | | | |
| | 1 DS1/D4 Channel Bank - Additionally Add NRC for each Port and Assoc Fea Activation (E:4/1/2004) | | | UEPMG | VUMD4 | 0.00 | 717.71 | 425.81 | 149.08 | 17.69 | | | | | | |
| | Bipolar 8 Zero Substitution | | | | | | | | | | | | | | | |
| | Clear Channel Capability Format, superframe - Subsequent Activity Only | | | UEPMG | CCOSF | 0.00 | 0.00i | 605.00s | | | | | | | | |
| | Clear Channel Capability Format - Extended Superframe - Subsequent Activity Only | | | UEPMG | CCOEF | 0.00 | 0.00i | 605.00s | | | | | | | | |
| | Alternate Mark Inversion (AMI) | | | | | | | | | | | | | | | |
| | Superframe Format | | | UEPMG | MCOSF | 0.00 | 0.00 | 0.00 | | | | | | | | |
| | Extended Superframe Format | | | UEPMG | MCOPO | 0.00 | 0.00 | 0.00 | | | | | | | | |
| | Exchange Ports Associated with 4-Wire DS1 Loop with Channelization with Port | | | | | | | | | | | | | | | |
| | Exchange Ports | | | | | | | | | | | | | | | |
| | Line Side Combination Channelized PBX Trunk Port - Business (E:4/1/2004) | | | UEPPX | UEPCX | 1.13 | 0.00 | 0.00 | 0.00 | 0.00 | | | | | | |
| | Line Side Outward Channelized PBX Trunk Port - Business (E:4/1/2004) | | | UEPPX | UEPOX | 1.13 | 0.00 | 0.00 | 0.00 | 0.00 | | | | | | |
| | Line Side Inward Only Channelized PBX Trunk Port without DID (E:4/1/2004) | | | UEPPX | UEP1X | 1.13 | 0.00 | 0.00 | 0.00 | 0.00 | | | | | | |
| | 2-Wire Trunk Side Unbundled Channelized DID Trunk Port (E:4/1/2004) | | | UEPPX | UEPDM | 7.09 | 0.00 | 0.00 | 0.00 | 0.00 | | | | | | |
| | Feature Activations - Unbundled Loop Concentration | | | | | | | | | | | | | | | |
| | Feature (Service) Activation for each Line Port Terminated in D4 Bank | | | UEPPX | 1PQWM | 0.56 | 25.45 | 13.44 | 4.20 | 4.17 | | | | | | |
| | Feature (Service) Activation for each Trunk Port Terminated in D4 Bank | | | UEPPX | 1PQWU | 0.56 | 78.31 | 18.46 | 59.37 | 11.60 | | | | | | |
| | Telephone Number/ Group Establishment Charges for DID Service | | | | | | | | | | | | | | | |
| | DID Trunk Termination (1 per Port) | | | UEPPX | NDT | 0.00 | 0.00 | 0.00 | | | | | | | | |
| | Estab Trk Grp and Provide 1st 20 DID Nos. (FL,GA, NC,& SC) | | | UEPPX | NDZ | 0.00 | 0.00 | 0.00 | | | | | | | | |
| | DID Numbers - groups of 20 - Valid all States | | | UEPPX | ND4 | 0.00 | 0.00 | 0.00 | | | | | | | | |
| | Non-Consecutive DID Numbers - per number | | | UEPPX | ND5 | 0.00 | 0.00 | 0.00 | | | | | | | | |
| | Reserve Non-Consecutive DID Numbers | | | UEPPX | ND6 | 0.00 | 0.00 | 0.00 | | | | | | | | |
| | Reserve DID Numbers | | | UEPPX | NDV | 0.00 | 0.00 | 0.00 | | | | | | | | |
| | Local Number Portability | | | | | | | | | | | | | | | |
| | Local Number Portability - 1 per port | | | UEPPX | LNPCP | 3.15 | 0.00 | 0.00 | | | | | | | | |

| UNBUNDLED NETWORK ELEMENTS - South Carolina | | | | | | | | | | | | | Attachment: 2 | | Exhibit: A | |
|---|---|---|---|---|---|---|---|---|---|---|---|---|---|---|---|---|
| CATEGORY | RATE ELEMENTS | Interim | Zone | BCS | USOC | RATES ($) | | | | | Svc Order Submitted Elec per LSR | Svc Order Submitted Manually per LSR | Incremental Charge - Manual Svc Order vs. Electronic-1st | Incremental Charge - Manual Svc Order vs. Electronic-Add'l | Incremental Charge - Manual Svc Order vs. Electronic-Disc 1st | Incremental Charge - Manual Svc Order vs. Electronic-Disc Add'l |
| | | | | | | Rec | Nonrecurring | | Nonrecurring Disconnect | | OSS Rates ($) | | | | | |
| | | | | | | | First | Add'l | First | Add'l | SOMEC | SOMAN | SOMAN | SOMAN | SOMAN | SOMAN |
| | FEATURES - Vertical and Optional | | | | | | | | | | | | | | | |
| | Local Switching Features Offered with Line Side Ports Only | | | | | | | | | | | | | | | |
| | All Features Available | | | UEPPX | UEPVF | 3.04 | 0.00 | 0.00 | | | | | | | | |
| UNBUNDLED CENTREX PORT/LOOP COMBINATIONS - COST BASED RATES | | | | | | | | | | | | | | | | |
| | 1. Cost Based Rates are applied where BellSouth is required by FCC and/or State Commission rule to provide Unbundled Local Switching or Switch Ports. | | | | | | | | | | | | | | | |
| | 2. Features shall apply to the Unbundled Port/Loop Combination - Cost Based Rate section in the same manner as they are applied to the Stand-Alone Unbundled Port section of this Rate Exhibit. | | | | | | | | | | | | | | | |
| | 3. End Office and Tandem Switching Usage and Common Transport Usage rates in the Port section of this rate exhibit shall apply to all combinations of loop/port network elements except for UNE Coin Port/Loop Combinations. | | | | | | | | | | | | | | | |
| | 4. The first and additional Port nonrecurring charges apply to Not Currently Combined Combos. For Currently Combined Combos, the nonrecurring charges shall be those identified in the Nonrecurring - Currently Combined sections. Additional NRCs may apply also and are categorized accordingly. | | | | | | | | | | | | | | | |
| | 5. Market Rates for Unbundled Centrex Port/Loop Combination will be negotiated on an Individual Case Basis, until further notice. | | | | | | | | | | | | | | | |
| | UNE-P CENTREX - 5ESS (Valid in All States) | | | | | | | | | | | | | | | |
| | 2-Wire VG Loop/2-Wire Voice Grade Port (Centrex) Combo | | | | | | | | | | | | | | | |
| | UNE Port/Loop Combination Rates (Non-Design) | | | | | | | | | | | | | | | |
| | 2-Wire VG Loop/2-Wire Voice Grade Port (Centrex) Port Combo - Non-Design | | 1 | UEP95 | | 14.89 | | | | | | | | | | |
| | 2-Wire VG Loop/2-Wire Voice Grade Port (Centrex)Port Combo - Non-Design | | 2 | UEP95 | | 21.52 | | | | | | | | | | |
| | 2-Wire VG Loop/2-Wire Voice Grade Port (Centrex)Port Combo - Non-Design | | 3 | UEP95 | | 27.17 | | | | | | | | | | |
| | UNE Port/Loop Combination Rates (Design) | | | | | | | | | | | | | | | |
| | 2-Wire VG Loop/2-Wire Voice Grade Port (Centrex) Port Combo - Design | | 1 | UEP95 | | 17.81 | | | | | | | | | | |
| | 2-Wire VG Loop/2-Wire Voice Grade Port (Centrex)Port Combo - Design | | 2 | UEP95 | | 24.26 | | | | | | | | | | |
| | 2-Wire VG Loop/2-Wire Voice Grade Port (Centrex)Port Combo - Design | | 3 | UEP95 | | 29.59 | | | | | | | | | | |
| | UNE Loop Rate | | | | | | | | | | | | | | | |
| | 2-Wire Voice Grade Loop (SL 1) - Zone 1 | | 1 | UEP95 | UECS1 | 13.76 | | | | | | | | | | |
| | 2-Wire Voice Grade Loop (SL 1) - Zone 2 | | 2 | UEP95 | UECS1 | 20.38 | | | | | | | | | | |
| | 2-Wire Voice Grade Loop (SL 1) - Zone 3 | | 3 | UEP95 | UECS1 | 26.04 | | | | | | | | | | |
| | 2-Wire Voice Grade Loop (SL 2) - Zone 1 | | 1 | UEP95 | UECS2 | 16.68 | | | | | | | | | | |
| | 2-Wire Voice Grade Loop (SL 2) - Zone 2 | | 2 | UEP95 | UECS2 | 23.13 | | | | | | | | | | |
| | 2-Wire Voice Grade Loop (SL 2) - Zone 3 | | 3 | UEP95 | UECS2 | 28.46 | | | | | | | | | | |
| | UNE Port Rate | | | | | | | | | | | | | | | |
| | All States | | | | | | | | | | | | | | | |
| | 2-Wire Voice Grade Port (Centrex ) Basic Local Area | | | UEP95 | UEPYA | 1.13 | 40.30 | 19.90 | 24.98 | 6.65 | | | | | | |
| | 2-Wire Voice Grade Port (Centrex 800 termination) | | | UEP95 | UEPYB | 1.13 | 40.30 | 19.90 | 24.98 | 6.65 | | | | | | |
| | 2-Wire Voice Grade Port (Centrex with Caller ID)1Basic Local Area | | | UEP95 | UEPYH | 1.13 | 40.30 | 19.90 | 24.98 | 6.65 | | | | | | |
| | 2-Wire Voice Grade Port (Centrex from diff Serving Wire Center)2,3 Basic Local Area | | | UEP95 | UEPYM | 1.13 | 108.36 | 70.71 | 54.47 | 11.94 | | | | | | |
| | 2-Wire Voice Grade Port, Diff Serving Wire Center 2,3 - 800 Service Term - Basic Local Area | | | UEP95 | UEPYZ | 1.13 | 108.36 | 70.71 | 54.47 | 11.94 | | | | | | |
| | 2-Wire Voice Grade Port terminated in on Megalink or equivalent - Basic Local Area | | | UEP95 | UEPY9 | 1.13 | 40.30 | 19.90 | 24.98 | 6.65 | | | | | | |
| | 2-Wire Voice Grade Port Terminated on 800 Service Term - Basic Local Area | | | UEP95 | UEPY2 | 1.13 | 40.30 | 19.90 | 24.98 | 6.65 | | | | | | |
| | AL, KY, LA, MS, SC, & TN Only | | | | | | | | | | | | | | | |
| | 2-Wire Voice Grade Port (Centrex ) | | | UEP95 | UEPQA | 1.13 | 40.30 | 19.90 | 24.98 | 6.65 | | | | | | |
| | 2-Wire Voice Grade Port (Centrex 800 termination) | | | UEP95 | UEPQB | 1.13 | 40.30 | 19.90 | 24.98 | 6.65 | | | | | | |
| | 2-Wire Voice Grade Port (Centrex with Caller ID)1 | | | UEP95 | UEPQH | 1.13 | 40.30 | 19.90 | 24.98 | 6.65 | | | | | | |
| | 2-Wire Voice Grade Port (Centrex from diff Serving Wire Center)2,3 | | | UEP95 | UEPQM | 1.13 | 108.36 | 70.71 | 54.47 | 11.94 | | | | | | |
| | 2-Wire Voice Grade Port, Diff Serving Wire Center - 800 Service Term 2,3 | | | UEP95 | UEPQZ | 1.13 | 108.36 | 70.71 | 54.47 | 11.94 | | | | | | |
| | 2-Wire Voice Grade Port terminated in on Megalink or equivalent | | | UEP95 | UEPQ9 | 1.13 | 40.30 | 19.90 | 24.98 | 6.65 | | | | | | |
| | 2-Wire Voice Grade Port Terminated on 800 Service Term | | | UEP95 | UEPQ2 | 1.13 | 40.30 | 19.90 | 24.98 | 6.65 | | | | | | |
| | Local Switching | | | | | | | | | | | | | | | |

| UNBUNDLED NETWORK ELEMENTS - South Carolina | | | | | | | | | | | | | | Attachment: 2 | | Exhibit: A | |
|---|---|---|---|---|---|---|---|---|---|---|---|---|---|---|---|---|---|
| CATEGORY | RATE ELEMENTS | Interim | Zone | BCS | USOC | RATES ($) | | | | | Svc Order Submitted Elec per LSR | Svc Order Submitted Manually per LSR | Incremental Charge - Manual Svc Order vs. Electronic-1st | Incremental Charge - Manual Svc Order vs. Electronic-Add'l | Incremental Charge - Manual Svc Order vs. Electronic-Disc 1st | Incremental Charge - Manual Svc Order vs. Electronic-Disc Add'l |
| | | | | | | Rec | Nonrecurring | | Nonrecurring Disconnect | | OSS Rates ($) | | | | | |
| | | | | | | | First | Add'l | First | Add'l | SOMEC | SOMAN | SOMAN | SOMAN | SOMAN | SOMAN |
| | Centrex Intercom Funtionality, per port | | | UEP95 | URECS | 0.7996 | | | | | | | | | | |
| Local Number Portability | | | | | | | | | | | | | | | | |
| | Local Number Portability (1 per port) | | | UEP95 | LNPCC | 0.35 | | | | | | | | | | |
| Features | | | | | | | | | | | | | | | | |
| | All Standard Features Offered, per port | | | UEP95 | UEPVF | 3.04 | | | | | | | | | | |
| | All Select Features Offered, per port | | | UEP95 | UEPVS | 0.00 | 406.42 | | | | | | | | | |
| | All Centrex Control Features Offered, per port | | | UEP95 | UEPVC | 3.04 | | | | | | | | | | |
| NARS | | | | | | | | | | | | | | | | |
| | Unbundled Network Access Register - Combination | | | UEP95 | UARCX | 0.00 | 0.00 | 0.00 | 0.00 | 0.00 | | | | | | |
| | Unbundled Network Access Register - Indial | | | UEP95 | UAR1X | 0.00 | 0.00 | 0.00 | 0.00 | 0.00 | | | | | | |
| | Unbundled Network Access Register - Outdial | | | UEP95 | UAROX | 0.00 | 0.00 | 0.00 | 0.00 | 0.00 | | | | | | |
| Miscellaneous Terminations | | | | | | | | | | | | | | | | |
| 2-Wire Trunk Side | | | | | | | | | | | | | | | | |
| | Trunk Side Terminations, each | | | UEP95 | CEND6 | 8.86 | 119.57 | 18.78 | 60.03 | 3.77 | | | | | | |
| 4-Wire Digital (1.544 Megabits) | | | | | | | | | | | | | | | | |
| | DS1 Circuit Terminations, each | | | UEP95 | M1HD1 | 73.62 | 202.47 | 95.90 | 72.75 | 2.47 | | | | | | |
| | DS0 Channels Activated, each | | | UEP95 | M1HDO | 0.00 | 14.51 | | | | | | | | | |
| Interoffice Channel Mileage - 2-Wire | | | | | | | | | | | | | | | | |
| | Interoffice Channel Facilities Termination | | | UEP95 | M1GBC | 24.30 | 40.63 | 27.47 | 16.77 | 6.91 | | | | | | |
| | Interoffice Channel mileage, per mile or fraction of mile | | | UEP95 | M1GBM | 0.0167 | | | | | | | | | | |
| Feature Activations (DS0) Centrex Loops on Channelized DS1 Service | | | | | | | | | | | | | | | | |
| D4 Channel Bank Feature Activations | | | | | | | | | | | | | | | | |
| | Feature Activation on D-4 Channel Bank Centrex Loop Slot | | | UEP95 | 1PQWS | 0.56 | | | | | | | | | | |
| | Feature Activation on D-4 Channel Bank FX line Side Loop Slot | | | UEP95 | 1PQW6 | 0.56 | | | | | | | | | | |
| | Feature Activation on D-4 Channel Bank FX Trunk Side Loop Slot | | | UEP95 | 1PQW7 | 0.56 | | | | | | | | | | |
| | Feature Activation on D-4 Channel Bank Centrex Loop Slot - Different Wire Center | | | UEP95 | 1PQWP | 0.56 | | | | | | | | | | |
| | Feature Activation on D-4 Channel Bank Private Line Loop Slot | | | UEP95 | 1PQWV | 0.56 | | | | | | | | | | |
| | Feature Activation on D-4 Channel Bank Tjie Line/Trunk Loop Slot | | | UEP95 | 1PQWQ | 0.56 | | | | | | | | | | |
| | Feature Activation on D-4 Channel Bank WATS Loop Slot | | | UEP95 | 1PQWA | 0.56 | | | | | | | | | | |
| Non-Recurring Charges (NRC) Associated with UNE-P Centrex | | | | | | | | | | | | | | | | |
| | NRC Conversion Currently Combined Switch-As-Is with allowed changes, per port | | | UEP95 | USAC2 | | 37.93 | 16.72 | | | | | | | | |
| | New Centrex Standard Common Block | | | UEP95 | M1ACS | 0.00 | 668.70 | | | | | | | | | |
| | New Centrex Customized Common Block | | | UEP95 | M1ACC | 0.00 | 668.70 | | | | | | | | | |
| | NAR Establishment Charge, Per Occasion | | | UEP95 | URECA | 0.00 | 72.89 | | | | | | | | | |
| Additional Non-Recurring Charges (NRC) | | | | | | | | | | | | | | | | |
| | Unbundled Miscellaneous Rate Element, Tag Loop at End Use Premise | | | UEP95 | URETL | | 8.33 | 0.83 | | | | | | | | |
| | Unbundled Miscellaneous Rate Element, Tag Design Loop at End Use Premise | | | UEP95 | URETN | | 11.24 | 1.10 | | | | | | | | |
| UNE-P CENTREX - DMS100 (Valid in All States) | | | | | | | | | | | | | | | | |
| 2-Wire VG Loop/2-Wire Voice Grade Port (Centrex) Combo | | | | | | | | | | | | | | | | |
| UNE Port/Loop Combination Rates (Non-Design) | | | | | | | | | | | | | | | | |
| | 2-Wire VG Loop/2-Wire Voice Grade Port (Centrex) Port Combo - Non-Design | | 1 | UEP9D | | 14.89 | | | | | | | | | | |
| | 2-Wire VG Loop/2-Wire Voice Grade Port (Centrex)Port Combo - Non-Design | | 2 | UEP9D | | 21.52 | | | | | | | | | | |
| | 2-Wire VG Loop/2-Wire Voice Grade Port (Centrex)Port Combo - Non-Design | | 3 | UEP9D | | 27.17 | | | | | | | | | | |
| UNE Port/Loop Combination Rates (Design) | | | | | | | | | | | | | | | | |
| | 2-Wire VG Loop/2-Wire Voice Grade Port (Centrex) Port Combo - Design | | 1 | UEP9D | | 17.81 | | | | | | | | | | |
| | 2-Wire VG Loop/2-Wire Voice Grade Port (Centrex)Port Combo - Design | | 2 | UEP9D | | 24.26 | | | | | | | | | | |

| UNBUNDLED NETWORK ELEMENTS - South Carolina | | | | | | | | | | | | | | Attachment: 2 | | Exhibit: A | |
|---|---|---|---|---|---|---|---|---|---|---|---|---|---|---|---|---|---|
| CATEGORY | | RATE ELEMENTS | Interim | Zone | BCS | USOC | RATES ($) | | | | | Svc Order Submitted Elec per LSR | Svc Order Submitted Manually per LSR | Incremental Charge - Manual Svc Order vs. Electronic-1st | Incremental Charge - Manual Svc Order vs. Electronic-Add'l | Incremental Charge - Manual Svc Order vs. Electronic-Disc 1st | Incremental Charge - Manual Svc Order vs. Electronic-Disc Add'l |
| | | | | | | | Rec | Nonrecurring | | Nonrecurring Disconnect | | OSS Rates ($) | | | | | |
| | | | | | | | | First | Add'l | First | Add'l | SOMEC | SOMAN | SOMAN | SOMAN | SOMAN | SOMAN |
| | | 2-Wire VG Loop/2-Wire Voice Grade Port (Centrex)Port Combo - Design | | 3 | UEP9D | | 29.59 | | | | | | | | | | |
| | UNE Loop Rate | | | | | | | | | | | | | | | | |
| | | 2-Wire Voice Grade Loop (SL 1) - Zone 1 | | 1 | UEP9D | UECS1 | 13.76 | | | | | | | | | | |
| | | 2-Wire Voice Grade Loop (SL 1) - Zone 2 | | 2 | UEP9D | UECS1 | 20.38 | | | | | | | | | | |
| | | 2-Wire Voice Grade Loop (SL 1) - Zone 3 | | 3 | UEP9D | UECS1 | 26.04 | | | | | | | | | | |
| | | 2-Wire Voice Grade Loop (SL 2) - Zone 1 | | 1 | UEP9D | UECS2 | 16.68 | | | | | | | | | | |
| | | 2-Wire Voice Grade Loop (SL 2) - Zone 2 | | 2 | UEP9D | UECS2 | 23.13 | | | | | | | | | | |
| | | 2-Wire Voice Grade Loop (SL 2) - Zone 3 | | 3 | UEP9D | UECS2 | 28.46 | | | | | | | | | | |
| | UNE Port Rate | | | | | | | | | | | | | | | | |
| | ALL STATES | | | | | | | | | | | | | | | | |
| | | 2-Wire Voice Grade Port (Centrex ) Basic Local Area | | | UEP9D | UEPYA | 1.13 | 40.30 | 19.90 | 24.98 | 6.65 | | | | | | |
| | | 2-Wire Voice Grade Port (Centrex 800 termination)Basic Local Area | | | UEP9D | UEPYB | 1.13 | 40.30 | 19.90 | 24.98 | 6.65 | | | | | | |
| | | 2-Wire Voice Grade Port (Centrex / EBS-PSET)3Basic Local Area | | | UEP9D | UEPYC | 1.13 | 40.30 | 19.90 | 24.98 | 6.65 | | | | | | |
| | | 2-Wire Voice Grade Port (Centrex / EBS-M5009)3Basic Local Area | | | UEP9D | UEPYD | 1.13 | 40.30 | 19.90 | 24.98 | 6.65 | | | | | | |
| | | 2-Wire Voice Grade Port (Centrex / EBS-M5209))3 Basic Local Area | | | UEP9D | UEPYE | 1.13 | 40.30 | 19.90 | 24.98 | 6.65 | | | | | | |
| | | 2-Wire Voice Grade Port (Centrex / EBS-M5112))3 Basic Local Area | | | UEP9D | UEPYF | 1.13 | 40.30 | 19.90 | 24.98 | 6.65 | | | | | | |
| | | 2-Wire Voice Grade Port (Centrex / EBS-M5312))3Basic Local Area | | | UEP9D | UEPYG | 1.13 | 40.30 | 19.90 | 24.98 | 6.65 | | | | | | |
| | | 2-Wire Voice Grade Port (Centrex / EBS-M5008))3 Basic Local Area | | | UEP9D | UEPYT | 1.13 | 40.30 | 19.90 | 24.98 | 6.65 | | | | | | |
| | | 2-Wire Voice Grade Port (Centrex / EBS-M5208))3 Basic Local Area | | | UEP9D | UEPYU | 1.13 | 40.30 | 19.90 | 24.98 | 6.65 | | | | | | |
| | | 2-Wire Voice Grade Port (Centrex / EBS-M5216))3 Basic Local Area | | | UEP9D | UEPYV | 1.13 | 40.30 | 19.90 | 24.98 | 6.65 | | | | | | |
| | | 2-Wire Voice Grade Port (Centrex / EBS-M5316))3 Basic Local Area | | | UEP9D | UEPY3 | 1.13 | 40.30 | 19.90 | 24.98 | 6.65 | | | | | | |
| | | 2-Wire Voice Grade Port (Centrex with Caller ID) Basic Local Area | | | UEP9D | UEPYH | 1.13 | 40.30 | 19.90 | 24.98 | 6.65 | | | | | | |
| | | 2-Wire Voice Grade Port (Centrex/Caller ID/Msg Wtg Lamp Indication))4 Basic Local Area | | | UEP9D | UEPYW | 1.13 | 40.30 | 19.90 | 24.98 | 6.65 | | | | | | |
| | | 2-Wire Voice Grade Port (Centrex/Msg Wtg Lamp Indication))4 Basic Local Area | | | UEP9D | UEPYJ | 1.13 | 40.30 | 19.90 | 24.98 | 6.65 | | | | | | |
| | | 2-Wire Voice Grade Port (Centrex from diff Serving Wire Center) 2,3-Basic Local Area | | | UEP9D | UEPYM | 1.13 | 108.36 | 70.71 | 54.47 | 11.94 | | | | | | |
| | | 2-Wire Voice Grade Port (Centrex/differ SWC /EBS-PSET)2,3,4 Basic Local Area | | | UEP9D | UEPYO | 1.13 | 108.36 | 70.71 | 54.47 | 11.94 | | | | | | |
| | | 2-Wire Voice Grade Port (Centrex/differ SWC /EBS-M5009)2,3,4 Basic Local Area | | | UEP9D | UEPYP | 1.13 | 108.36 | 70.71 | 54.47 | 11.94 | | | | | | |
| | | 2-Wire Voice Grade Port (Centrex/differ SWC /EBS-5209)2,3,4 Basic Local Area | | | UEP9D | UEPYQ | 1.13 | 108.36 | 70.71 | 54.47 | 11.94 | | | | | | |
| | | 2-Wire Voice Grade Port (Centrex/differ SWC /EBS-M5112)2,3,4 Basic Local Area | | | UEP9D | UEPYR | 1.13 | 108.36 | 70.71 | 54.47 | 11.94 | | | | | | |
| | | 2-Wire Voice Grade Port (Centrex/differ SWC /EBS-M5312)2,3,4 Basic Local Area | | | UEP9D | UEPYS | 1.13 | 108.36 | 70.71 | 54.47 | 11.94 | | | | | | |
| | | 2-Wire Voice Grade Port (Centrex/differ SWC /EBS-M5008)2,3,4 Basic Local Area | | | UEP9D | UEPY4 | 1.13 | 108.36 | 70.71 | 54.47 | 11.94 | | | | | | |
| | | 2-Wire Voice Grade Port (Centrex/differ SWC /EBS-M5208)2, 3 Basic Local Area | | | UEP9D | UEPY5 | 1.13 | 108.36 | 70.71 | 54.47 | 11.94 | | | | | | |
| | | 2-Wire Voice Grade Port (Centrex/differ SWC /EBS-M5216)2,3,4 Basic Local Area | | | UEP9D | UEPY6 | 1.13 | 108.36 | 70.71 | 54.47 | 11.94 | | | | | | |
| | | 2-Wire Voice Grade Port (Centrex/differ SWC /EBS-M5316)2,3,4 Basic Local Area | | | UEP9D | UEPY7 | 1.13 | 108.36 | 70.71 | 54.47 | 11.94 | | | | | | |

## UNBUNDLED NETWORK ELEMENTS - South Carolina

| CATEGORY | RATE ELEMENTS | Interim | Zone | BCS | USOC | RATES ($) | | | | | Svc Order Submitted Elec per LSR | Svc Order Submitted Manually per LSR | Attachment: 2 | | Exhibit: A | |
|---|---|---|---|---|---|---|---|---|---|---|---|---|---|---|---|---|
| | | | | | | | | | | | | | Incremental Charge - Manual Svc Order vs. Electronic-1st | Incremental Charge - Manual Svc Order vs. Electronic-Add'l | Incremental Charge - Manual Svc Order vs. Electronic-Disc 1st | Incremental Charge - Manual Svc Order vs. Electronic-Disc Add'l |
| | | | | | | Rec | Nonrecurring | | Nonrecurring Disconnect | | OSS Rates ($) | | | | | |
| | | | | | | | First | Add'l | First | Add'l | SOMEC | SOMAN | SOMAN | SOMAN | SOMAN | SOMAN |
| | 2-Wire Voice Grade Port, Diff Serving Wire Center - 800 Service Term 2,3 | | | UEP9D | UEPYZ | 1.13 | 108.36 | 70.71 | 54.47 | 11.94 | | | | | | |
| | 2-Wire Voice Grade Port terminated in on Megalink or equivalent Basic Local Area | | | UEP9D | UEPY9 | 1.13 | 40.30 | 19.90 | 24.98 | 6.65 | | | | | | |
| | 2-Wire Voice Grade Port Terminated on 800 Service Term Basic Local Area | | | UEP9D | UEPY2 | 1.13 | 40.30 | 19.90 | 24.98 | 6.65 | | | | | | |
| **AL, KY, LA, MS, SC, & TN Only** | | | | | | | | | | | | | | | | |
| | 2-Wire Voice Grade Port (Centrex) | | | UEP9D | UEPQA | 1.13 | 40.30 | 19.90 | 24.98 | 6.65 | | | | | | |
| | 2-Wire Voice Grade Port (Centrex 800 termination) | | | UEP9D | UEPQB | 1.13 | 40.30 | 19.90 | 24.98 | 6.65 | | | | | | |
| | 2-Wire Voice Grade Port (Centrex / EBS-PSET)4 | | | UEP9D | UEPQC | 1.13 | 40.30 | 19.90 | 24.98 | 6.65 | | | | | | |
| | 2-Wire Voice Grade Port (Centrex / EBS-M5009)4 | | | UEP9D | UEPQD | 1.13 | 40.30 | 19.90 | 24.98 | 6.65 | | | | | | |
| | 2-Wire Voice Grade Port (Centrex / EBS-M5209)4 | | | UEP9D | UEPQE | 1.13 | 40.30 | 19.90 | 24.98 | 6.65 | | | | | | |
| | 2-Wire Voice Grade Port (Centrex / EBS-M5112)4 | | | UEP9D | UEPQF | 1.13 | 40.30 | 19.90 | 24.98 | 6.65 | | | | | | |
| | 2-Wire Voice Grade Port (Centrex / EBS-M5312)4 | | | UEP9D | UEPQG | 1.13 | 40.30 | 19.90 | 24.98 | 6.65 | | | | | | |
| | 2-Wire Voice Grade Port (Centrex / EBS-M5008)4 | | | UEP9D | UEPQT | 1.13 | 40.30 | 19.90 | 24.98 | 6.65 | | | | | | |
| | 2-Wire Voice Grade Port (Centrex / EBS-M5208)4 | | | UEP9D | UEPQU | 1.13 | 40.30 | 19.90 | 24.98 | 6.65 | | | | | | |
| | 2-Wire Voice Grade Port (Centrex / EBS-M5216)4 | | | UEP9D | UEPQV | 1.13 | 40.30 | 19.90 | 24.98 | 6.65 | | | | | | |
| | 2-Wire Voice Grade Port (Centrex / EBS-M5316)4 | | | UEP9D | UEPQ3 | 1.13 | 40.30 | 19.90 | 24.98 | 6.65 | | | | | | |
| | 2-Wire Voice Grade Port (Centrex with Caller ID) | | | UEP9D | UEPQH | 1.13 | 40.30 | 19.90 | 24.98 | 6.65 | | | | | | |
| | 2-Wire Voice Grade Port (Centrex/Caller ID/Msg Wtg Lamp Indication)4 | | | UEP9D | UEPQW | 1.13 | 40.30 | 19.90 | 24.98 | 6.65 | | | | | | |
| | 2-Wire Voice Grade Port (Centrex/Msg Wtg Lamp Indication)4 | | | UEP9D | UEPQJ | 1.13 | 40.30 | 19.90 | 24.98 | 6.65 | | | | | | |
| | 2-Wire Voice Grade Port (Centrex from diff Serving Wire Center) 2,3 | | | UEP9D | UEPQM | 1.13 | 108.36 | 70.71 | 54.47 | 11.94 | | | | | | |
| | 2-Wire Voice Grade Port (Centrex/differ SWC /EBS-PSET)2,3,4 | | | UEP9D | UEPQO | 1.13 | 108.36 | 70.71 | 54.47 | 11.94 | | | | | | |
| | 2-Wire Voice Grade Port (Centrex/differ SWC /EBS-M5009)2,3,4 | | | UEP9D | UEPQP | 1.13 | 108.36 | 70.71 | 54.47 | 11.94 | | | | | | |
| | 2-Wire Voice Grade Port (Centrex/differ SWC /EBS-5209)2,3,4 | | | UEP9D | UEPQQ | 1.13 | 108.36 | 70.71 | 54.47 | 11.94 | | | | | | |
| | 2-Wire Voice Grade Port (Centrex/differ SWC /EBS-M5112)2,3,4 | | | UEP9D | UEPQR | 1.13 | 108.36 | 70.71 | 54.47 | 11.94 | | | | | | |
| | 2-Wire Voice Grade Port (Centrex/differ SWC /EBS-M5312)2,3,4 | | | UEP9D | UEPQS | 1.13 | 108.36 | 70.71 | 54.47 | 11.94 | | | | | | |
| | 2-Wire Voice Grade Port (Centrex/differ SWC /EBS-M5008)2,3,4 | | | UEP9D | UEPQ4 | 1.13 | 108.36 | 70.71 | 54.47 | 11.94 | | | | | | |
| | 2-Wire Voice Grade Port (Centrex/differ SWC /EBS-M5208)2,3,4 | | | UEP9D | UEPQ5 | 1.13 | 108.36 | 70.71 | 54.47 | 11.94 | | | | | | |
| | 2-Wire Voice Grade Port (Centrex/differ SWC /EBS-M5216)2,3,4 | | | UEP9D | UEPQ6 | 1.13 | 108.36 | 70.71 | 54.47 | 11.94 | | | | | | |
| | 2-Wire Voice Grade Port (Centrex/differ SWC /EBS-M5316)2,3,4 | | | UEP9D | UEPQ7 | 1.13 | 108.36 | 70.71 | 54.47 | 11.94 | | | | | | |
| | 2-Wire Voice Grade Port, Diff Serving Wire Center - 800 Service Term 2,3 | | | UEP9D | UEPQZ | 1.13 | 108.36 | 70.71 | 54.47 | 11.94 | | | | | | |
| | 2-Wire Voice Grade Port terminated in on Megalink or equivalent | | | UEP9D | UEPQ9 | 1.13 | 40.30 | 19.90 | 24.98 | 6.65 | | | | | | |
| | 2-Wire Voice Grade Port Terminated on 800 Service Term | | | UEP9D | UEPQ2 | 1.13 | 40.30 | 19.90 | 24.98 | 6.65 | | | | | | |
| **Local Switching** | | | | | | | | | | | | | | | | |
| | Centrex Intercom Funtionality, per port | | | UEP9D | URECS | 0.7996 | | | | | | | | | | |
| **Local Number Portability** | | | | | | | | | | | | | | | | |
| | Local Number Portability (1 per port) | | | UEP9D | LNPCC | 0.35 | | | | | | | | | | |
| **Features** | | | | | | | | | | | | | | | | |
| | All Standard Features Offered, per port | | | UEP9D | UEPVF | 3.04 | | | | | | | | | | |
| | All Select Features Offered, per port | | | UEP9D | UEPVS | 0.00 | 406.42 | | | | | | | | | |
| | All Centrex Control Features Offered, per port | | | UEP9D | UEPVC | 3.04 | | | | | | | | | | |
| **NARS** | | | | | | | | | | | | | | | | |
| | Unbundled Network Access Register - Combination | | | UEP9D | UARCX | 0.00 | 0.00 | 0.00 | 0.00 | 0.00 | | | | | | |
| | Unbundled Network Access Register - Inward | | | UEP9D | UAR1X | 0.00 | 0.00 | 0.00 | 0.00 | 0.00 | | | | | | |
| | Unbundled Network Access Register - Outdial | | | UEP9D | UAROX | 0.00 | 0.00 | 0.00 | 0.00 | 0.00 | | | | | | |

| UNBUNDLED NETWORK ELEMENTS - South Carolina | | | | | | | | | | | | | Attachment: 2 | | Exhibit: A | |
|---|---|---|---|---|---|---|---|---|---|---|---|---|---|---|---|---|
| CATEGORY | RATE ELEMENTS | Interim | Zone | BCS | USOC | RATES ($) | | | | | Svc Order Submitted Elec per LSR | Svc Order Submitted Manually per LSR | Incremental Charge - Manual Svc Order vs. Electronic-1st | Incremental Charge - Manual Svc Order vs. Electronic-Add'l | Incremental Charge - Manual Svc Order vs. Electronic-Disc 1st | Incremental Charge - Manual Svc Order vs. Electronic-Disc Add'l |
| | | | | | | Rec | Nonrecurring | | Nonrecurring Disconnect | | OSS Rates ($) | | | | | |
| | | | | | | | First | Add'l | First | Add'l | SOMEC | SOMAN | SOMAN | SOMAN | SOMAN | SOMAN |
| Miscellaneous Terminations | | | | | | | | | | | | | | | | |
| 2-Wire Trunk Side | | | | | | | | | | | | | | | | |
| | Trunk Side Terminations, each | | | UEP9D | CEND6 | 8.86 | 119.57 | 18.78 | 60.03 | 3.77 | | | | | | |
| 4-Wire Digital (1.544 Megabits) | | | | | | | | | | | | | | | | |
| | DS1 Circuit Terminations, each | | | UEP9D | M1HD1 | 73.62 | 202.47 | 95.90 | 72.75 | 2.47 | | | | | | |
| | DS0 Channels Activiated per Channel | | | UEP9D | M1HDO | 0.00 | 14.51 | | | | | | | | | |
| Interoffice Channel Mileage - 2-Wire | | | | | | | | | | | | | | | | |
| | Interoffice Channel Facilities Termination | | | UEP9D | M1GBC | 24.30 | 40.63 | 27.47 | 16.77 | 6.91 | | | | | | |
| | Interoffice Channel mileage, per mile or fraction of mile | | | UEP9D | M1GBM | 0.0167 | | | | | | | | | | |
| Feature Activations (DS0) Centrex Loops on Channelized DS1 Service | | | | | | | | | | | | | | | | |
| D4 Channel Bank Feature Activations | | | | | | | | | | | | | | | | |
| | Feature Activation on D-4 Channel Bank Centrex Loop Slot | | | UEP9D | 1PQWS | 0.56 | | | | | | | | | | |
| | Feature Activation on D-4 Channel Bank FX line Side Loop Slot | | | UEP9D | 1PQW6 | 0.56 | | | | | | | | | | |
| | Feature Activation on D-4 Channel Bank FX Trunk Side Loop Slot | | | UEP9D | 1PQW7 | 0.56 | | | | | | | | | | |
| | Feature Activation on D-4 Channel Bank Centrex Loop Slot - Different Wire Center | | | UEP9D | 1PQWP | 0.56 | | | | | | | | | | |
| | Feature Activation on D-4 Channel Bank Private Line Loop Slot | | | UEP9D | 1PQWV | 0.56 | | | | | | | | | | |
| | Feature Activation on D-4 Channel Bank Tjie Line/Trunk Loop Slot | | | UEP9D | 1PQWQ | 0.56 | | | | | | | | | | |
| | Feature Activation on D-4 Channel Bank WATS Loop Slot | | | UEP9D | 1PQWA | 0.56 | | | | | | | | | | |
| Non-Recurring Charges (NRC) Associated with UNE-P Centrex | | | | | | | | | | | | | | | | |
| | NRC Conversion Currently Combined Switch-As-Is with allowed changes, per port | | | UEP9D | USAC2 | | 37.93 | 16.72 | | | | | | | | |
| | New Centrex Standard Common Block | | | UEP9D | M1ACS | 0.00 | 668.70 | | | | | | | | | |
| | New Centrex Customized Common Block | | | UEP9D | M1ACC | 0.00 | 668.70 | | | | | | | | | |
| | NAR Establishment Charge, Per Occasion | | | UEP9D | URECA | 0.00 | 72.89 | | | | | | | | | |
| Additional Non-Recurring Charges (NRC) | | | | | | | | | | | | | | | | |
| | Unbundled Miscellaneous Rate Element, Tag Loop at End Use Premise | | | UEP9D | URETL | | 8.33 | 0.83 | | | | | | | | |
| | Unbundled Miscellaneous Rate Element, Tag Design Loop at End Use Premise | | | UEP9D | URETN | | 11.24 | 1.10 | | | | | | | | |
| Note 1 - Required Port for Centrex Control in 1AESS, 5ESS & EWSD | | | | | | | | | | | | | | | | |
| Note 2 - Requres Interoffice Channel Mileage | | | | | | | | | | | | | | | | |
| Note 3 - Installation is combination of Installation charge for SL2 Loop and Port | | | | | | | | | | | | | | | | |
| Note 4 - Requires Specific Customer Premises Equipment | | | | | | | | | | | | | | | | |
| Note: Rates displaying an "R" in Interim column are interim and subject to rate true-up as set forth in General Terms and Conditions. | | | | | | | | | | | | | | | | |

| UNBUNDLED NETWORK ELEMENTS - Tennessee | | | | | | | | | | | | | | Attachment: 2 | | Exhibit: A | |
|---|---|---|---|---|---|---|---|---|---|---|---|---|---|---|---|---|---|
| CATEGORY | | RATE ELEMENTS | Interim | Zone | BCS | USOC | RATES ($) | | | | | Svc Order Submitted Elec per LSR | Svc Order Submitted Manually per LSR | Incremental Charge - Manual Svc Order vs. Electronic- 1st | Incremental Charge - Manual Svc Order vs. Electronic- Add'l | Incremental Charge - Manual Svc Order vs. Electronic- Disc 1st | Incremental Charge - Manual Svc Order vs. Electronic- Disc Add'l |
| | | | | | | | Rec | Nonrecurring | | Nonrecurring Disconnect | | OSS Rates ($) | | | | | |
| | | | | | | | | First | Add'l | First | Add'l | SOMEC | SOMAN | SOMAN | SOMAN | SOMAN | SOMAN |
| | The "Zone" shown in the sections for stand-alone loops or loops as part of a combination refers to Geographically Deaveraged UNE Zones. To view Geographically Deaveraged UNE Zone Designations by Central Office, refer to Internet Website: http://www.interconnection.bellsouth.com/become_a_clec/html/interconnection.htm | | | | | | | | | | | | | | | | |
| OPERATIONAL SUPPORT SYSTEMS (OSS) - "REGIONAL RATES" | | | | | | | | | | | | | | | | | |
| | NOTE: (1) CLEC should contact its contract negotiator if it prefers the "state specific" OSS charges as ordered by the State Commissions. The OSS charges currently contained in this rate exhibit are the BellSouth "regional" service ordering charges. CLEC may elect either the state specific Commission ordered rates for the service ordering charges, or CLEC may elect the regional service ordering charge, however, CLEC can not obtain a mixture of the two regardless if CLEC has a interconnection contract established in each of the 9 states. | | | | | | | | | | | | | | | | |
| | NOTE: (2) Any element that can be ordered electronically will be billed according to the SOMEC rate listed in this category. Please refer to BellSouth's Local Ordering Handbook (LOH) to determine if a product can be ordered electronically. For those elements that cannot be ordered electronically at present per the LOH, the listed SOMEC rate in this category reflects the charge that would be billed to a CLEC once electronic ordering capabilities come on-line for that element. Otherwise, the manual ordering charge, SOMAN, will be applied to a CLECs bill when it submits an LSR to BellSouth. | | | | | | | | | | | | | | | | |
| | NOTE: (3) OSS - Manual Service Order Charge, Per Element - UNE Only **Please see applicable rate element for SOMAN charge** | | | | | | | | | | | | | | | | |
| | | OSS - Electronic Service Order Charge, Per Local Service Request (LSR) - UNE Only | | | | SOMEC | | 3.50 | 0.00 | 3.50 | 0.00 | | | | | | |
| UNE SERVICE DATE ADVANCEMENT CHARGE | | | | | | | | | | | | | | | | | |
| | NOTE: The Expedite charge will be maintained commensurate with BellSouth's FCC No.1 Tariff, Section 5 as applicable. | | | | | | | | | | | | | | | | |
| | | UNE Expedite Charge per Circuit or Line Assignable USOC, per Day | | | UAL, UEANL, UCL, UEF, UDF, UEQ, UDL, UENTW, UDN, UEA, UHL, ULC, USL, U1T12, U1T48, U1TD1, U1TD3, U1TDX, U1TO3, U1TS1, U1TVX, UC1BC, UC1BL, UC1CC, UC1CL, UC1DC, UC1DL, UC1EC, UC1EL, UC1FC, UC1FL, UC1GC, UC1GL, UC1HC, UC1HL, UDL12, UDL48, UDLO3, UDLSX, UE3, ULD12, ULD48, ULDD1, ULDD3, ULDDX, ULDO3, ULDS1, ULDVX, UNC1X, UNC3X, UNCDX, UNCNX, UNCSX, UNCVX, UNLD1, UNLD3, UXTD1, UXTD3, UXTS1, U1TUC, U1TUD, U1TUB, U1TUA | SDASP | | 200.00 | | | | | | | | | |
| UNBUNDLED EXCHANGE ACCESS LOOP | | | | | | | | | | | | | | | | | |
| | 2-WIRE ANALOG VOICE GRADE LOOP | | | | | | | | | | | | | | | | |
| | | 2-Wire Analog Voice Grade Loop - Service Level 1- Zone 1 | | 1 | UEANL | UEAL2 | 13.19 | 31.99 | 20.02 | 10.65 | 1.41 | | | 20.35 | 10.54 | 13.32 | 13.32 |
| | | 2-Wire Analog Voice Grade Loop - Service Level 1- Zone 2 | | 2 | UEANL | UEAL2 | 17.23 | 31.99 | 20.02 | 10.65 | 1.41 | | | 20.35 | 10.54 | 13.32 | 13.32 |
| | | 2-Wire Analog Voice Grade Loop - Service Level 1- Zone 3 | | 3 | UEANL | UEAL2 | 22.53 | 31.99 | 20.02 | 10.65 | 1.41 | | | 20.35 | 10.54 | 13.32 | 13.32 |
| | | 2-Wire Analog Voice Grade Loop - Service Level 1- Zone 1 | | 1 | UEANL | UEASL | 13.19 | 31.99 | 20.02 | 10.65 | 1.41 | | | 20.35 | 10.54 | 13.32 | 13.32 |
| | | 2-Wire Analog Voice Grade Loop - Service Level 1- Zone 2 | | 2 | UEANL | UEASL | 17.23 | 31.99 | 20.02 | 10.65 | 1.41 | | | 20.35 | 10.54 | 13.32 | 13.32 |
| | | 2-Wire Analog Voice Grade Loop - Service Level 1- Zone 3 | | 3 | UEANL | UEASL | 22.53 | 31.99 | 20.02 | 10.65 | 1.41 | | | 20.35 | 10.54 | 13.32 | 13.32 |
| | | Unbundled Miscellaneous Rate Element, Tag Loop at End User Premise | | | UEANL | URETL | | 8.33 | 0.83 | | | | | 20.35 | 10.54 | 13.32 | 13.32 |
| | | Loop Testing - Basic 1st Half Hour | | | UEANL | URET1 | | 78.92 | 78.92 | | | | | 20.35 | 10.54 | 13.32 | 13.32 |
| | | Loop Testing - Basic Additional Half Hour | | | UEANL | URETA | | 23.33 | 23.33 | | | | | 20.35 | 10.54 | 13.32 | 13.32 |
| | | CLEC to CLEC Conversion Charge Without Outside Dispatch (UVL-SL1) | | | UEANL | UREWO | | 15.80 | 8.95 | | | | | 20.35 | 10.54 | 13.32 | 13.32 |

| UNBUNDLED NETWORK ELEMENTS - Tennessee | | | | | | | | | | | | | | Attachment: 2 | | Exhibit: A | |
|---|---|---|---|---|---|---|---|---|---|---|---|---|---|---|---|---|---|
| CATEGORY | | RATE ELEMENTS | Interim | Zone | BCS | USOC | RATES ($) | | | | | Svc Order Submitted Elec per LSR | Svc Order Submitted Manually per LSR | Incremental Charge - Manual Svc Order vs. Electronic-1st | Incremental Charge - Manual Svc Order vs. Electronic-Add'l | Incremental Charge - Manual Svc Order vs. Electronic-Disc 1st | Incremental Charge - Manual Svc Order vs. Electronic-Disc Add'l |
| | | | | | | | | Nonrecurring | | Nonrecurring Disconnect | | OSS Rates ($) | | | | | |
| | | | | | | | Rec | First | Add'l | First | Add'l | SOMEC | SOMAN | SOMAN | SOMAN | SOMAN | SOMAN |
| | | Unbundled Voice Loop, Non-Design Voice Loop, billing for BST providing make-up (Engineering Information - E.I.) | | | UEANL | UEANM | | 28.80 | 28.80 | | | | | | | | |
| | | Manual Order Coordination for UVL-SL1s (per loop) | | | UEANL | UEAMC | | 36.52 | 36.52 | | | | | | | | |
| | | Order Coordination for Specified Conversion Time for UVL-SL1 (per LSR) | | | UEANL | OCOSL | | 34.29 | 34.29 | | | | | | | | |
| | **2-WIRE Unbundled COPPER LOOP** | | | | | | | | | | | | | | | | |
| | | 2-Wire Unbundled Copper Loop - Non-Designed Zone 1 | | 1 | UEQ | UEQ2X | 13.19 | 31.99 | 20.02 | 10.65 | 1.41 | | | 20.35 | 10.54 | 13.32 | 13.32 |
| | | 2 Wire Unbundled Copper Loop - Non-Designed - Zone 2 | | 2 | UEQ | UEQ2X | 17.23 | 31.99 | 20.02 | 10.65 | 1.41 | | | 20.35 | 10.54 | 13.32 | 13.32 |
| | | 2 Wire Unbundled Copper Loop - Non-Designed - Zone 3 | | 3 | UEQ | UEQ2X | 22.53 | 31.99 | 20.02 | 10.65 | 1.41 | | | 20.35 | 10.54 | 13.32 | 13.32 |
| | | Unbundled Miscellaneous Rate Element, Tag Loop at End User Premise | | | UEQ | URETL | | 8.33 | 0.83 | | | | | 20.35 | 10.54 | 13.32 | 13.32 |
| | | Manual Order Coordination 2 Wire Unbundled Copper Loop - Non-Designed (per loop) | | | UEQ | USBMC | | 36.52 | 36.52 | | | | | | | | |
| | | Unbundled Copper Loop, Non-Design Copper Loop, billing for BST providing make-up (Engineering Information - E.I.) | | | UEQ | UEQMU | | 28.80 | 28.80 | | | | | 20.35 | 10.54 | 13.32 | 13.32 |
| | | Loop Testing - Basic 1st Half Hour | | | UEQ | URET1 | | 78.92 | 78.92 | | | | | 20.35 | 10.54 | 13.32 | 13.32 |
| | | Loop Testing - Basic Additional Half Hour | | | UEQ | URETA | | 23.33 | 23.33 | | | | | 20.35 | 10.54 | 13.32 | 13.32 |
| | | CLEC to CLEC Conversion Charge Without Outside Dispatch (UCL-ND) | | | UEQ | UREWO | | 14.29 | 7.44 | | | | | 20.35 | 10.54 | 13.32 | 13.32 |
| **UNBUNDLED EXCHANGE ACCESS LOOP** | | | | | | | | | | | | | | | | | |
| | **2-WIRE ANALOG VOICE GRADE LOOP** | | | | | | | | | | | | | | | | |
| | | 2 Wire Analog Voice Grade Loop-Service Level 1-Line Splitting-Zone 1 | | 1 | UEPSR UEPSB | UEALS | 13.19 | 31.99 | 20.02 | 10.65 | 1.41 | | | 20.35 | 10.54 | 13.32 | 13.32 |
| | | 2 Wire Analog Voice Grade Loop-Service Level 1-Line Splitting-Zone 1 | | 1 | UEPSR UEPSB | UEABS | 13.19 | 31.99 | 20.02 | 10.65 | 1.41 | | | 20.35 | 10.54 | 13.32 | 13.32 |
| | | 2 Wire Analog Voice Grade Loop- Service Level 1-Line Splitting-Zone 2 | | 2 | UEPSR UEPSB | UEALS | 17.23 | 31.99 | 20.02 | 10.65 | 1.41 | | | 20.35 | 10.54 | 13.32 | 13.32 |
| | | 2 Wire Analog Voice Grade Loop- Service Level 1-Line Splitting-Zone 2 | | 2 | UEPSR UEPSB | UEABS | 17.23 | 31.99 | 20.02 | 10.65 | 1.41 | | | 20.35 | 10.54 | 13.32 | 13.32 |
| | | 2 Wire Analog Voice Grade Loop-Service Level 1-Line Splitting-Zone 3 | | 3 | UEPSR UEPSB | UEALS | 22.53 | 31.99 | 20.02 | 10.65 | 1.41 | | | 20.35 | 10.54 | 13.32 | 13.32 |
| | | 2 Wire Analog Voice Grade Loop-Service Level 1-Line Splitting-Zone 3 | | 3 | UEPSR UEPSB | UEABS | 22.53 | 31.99 | 20.02 | 10.65 | 1.41 | | | 20.35 | 10.54 | 13.32 | 13.32 |
| **UNBUNDLED EXCHANGE ACCESS LOOP** | | | | | | | | | | | | | | | | | |
| | **2-WIRE ANALOG VOICE GRADE LOOP** | | | | | | | | | | | | | | | | |
| | | 2-Wire Analog Voice Grade Loop - Service Level 2 w/Loop or Ground Start Signaling - Zone 1 | | 1 | UEA | UEAL2 | 16.56 | 75.06 | 48.20 | 28.70 | 17.64 | | | 20.35 | 10.54 | 13.32 | 13.32 |
| | | 2-Wire Analog Voice Grade Loop - Service Level 2 w/Loop or Ground Start Signaling - Zone 2 | | 2 | UEA | UEAL2 | 21.63 | 75.06 | 48.20 | 28.70 | 17.64 | | | 20.35 | 10.54 | 13.32 | 13.32 |
| | | 2-Wire Analog Voice Grade Loop - Service Level 2 w/Loop or Ground Start Signaling - Zone 3 | | 3 | UEA | UEAL2 | 28.28 | 75.06 | 48.20 | 28.70 | 17.64 | | | 20.35 | 10.54 | 13.32 | 13.32 |
| | | Order Coordination for Specified Conversion Time (per LSR) | | | UEA | OCOSL | | 34.29 | | | | | | | | | |
| | | 2-Wire Analog Voice Grade Loop - Service Level 2 w/Reverse Battery Signaling - Zone 1 | | 1 | UEA | UEAR2 | 16.56 | 75.06 | 48.20 | 28.70 | 17.64 | | | 20.35 | 10.54 | 13.32 | 13.32 |
| | | 2-Wire Analog Voice Grade Loop - Service Level 2 w/Reverse Battery Signaling - Zone 2 | | 2 | UEA | UEAR2 | 21.63 | 75.06 | 48.20 | 28.70 | 17.64 | | | 20.35 | 10.54 | 13.32 | 13.32 |
| | | 2-Wire Analog Voice Grade Loop - Service Level 2 w/Reverse Battery Signaling - Zone 3 | | 3 | UEA | UEAR2 | 28.28 | 75.06 | 48.20 | 28.70 | 17.64 | | | 20.35 | 10.54 | 13.32 | 13.32 |
| | | Order Coordination for Specified Conversion Time (per LSR) | | | UEA | OCOSL | | 34.29 | | | | | | | | | |
| | | CLEC to CLEC Conversion Charge without outside dispatch | | | UEA | UREWO | | 75.06 | 36.41 | | | | | 20.35 | 10.54 | 13.32 | 13.32 |
| | | Loop Tagging - Service Level 2 (SL2) | | | UEA | URETL | | 11.23 | 1.10 | | | | | 20.35 | 10.54 | 13.32 | 13.32 |
| | **4-WIRE ANALOG VOICE GRADE LOOP** | | | | | | | | | | | | | | | | |
| | | 4-Wire Analog Voice Grade Loop - Zone 1 | | 1 | UEA | UEAL4 | 24.70 | 122.76 | 85.57 | 76.35 | 39.16 | | | 20.35 | 10.54 | 13.32 | 13.32 |
| | | 4-Wire Analog Voice Grade Loop - Zone 2 | | 2 | UEA | UEAL4 | 32.25 | 122.76 | 85.57 | 76.35 | 39.16 | | | 20.35 | 10.54 | 13.32 | 13.32 |
| | | 4-Wire Analog Voice Grade Loop - Zone 3 | | 3 | UEA | UEAL4 | 42.17 | 122.76 | 85.57 | 76.35 | 39.16 | | | 20.35 | 10.54 | 13.32 | 13.32 |
| | | Order Coordination for Specified Conversion Time (per LSR) | | | UEA | OCOSL | | 34.29 | | | | | | | | | |
| | | CLEC to CLEC Conversion Charge without outside dispatch | | | UEA | UREWO | | 75.06 | 36.41 | | | | | 20.35 | 10.54 | 13.32 | 13.32 |
| | **2-WIRE ISDN DIGITAL GRADE LOOP** | | | | | | | | | | | | | | | | |
| | | 2-Wire ISDN Digital Grade Loop - Zone 1 | | 1 | UDN | U1L2X | 22.22 | 142.76 | 88.88 | 76.35 | 39.16 | | | 20.35 | 10.54 | 13.32 | 13.32 |

## UNBUNDLED NETWORK ELEMENTS - Tennessee

Attachment: 2 | Exhibit: A

| CATEGORY | RATE ELEMENTS | Interim | Zone | BCS | USOC | RATES ($) | | | | | Svc Order Submitted Elec per LSR | Svc Order Submitted Manually per LSR | Incremental Charge - Manual Svc Order vs. Electronic-1st | Incremental Charge - Manual Svc Order vs. Electronic-Add'l | Incremental Charge - Manual Svc Order vs. Electronic-Disc 1st | Incremental Charge - Manual Svc Order vs. Electronic-Disc Add'l |
|---|---|---|---|---|---|---|---|---|---|---|---|---|---|---|---|---|
| | | | | | | Rec | Nonrecurring | | Nonrecurring Disconnect | | OSS Rates ($) | | | | | |
| | | | | | | | First | Add'l | First | Add'l | SOMEC | SOMAN | SOMAN | SOMAN | SOMAN | SOMAN |
| | 2-Wire ISDN Digital Grade Loop - Zone 2 | | 2 | UDN | U1L2X | 29.02 | 142.76 | 88.88 | 76.35 | 39.16 | | | 20.35 | 10.54 | 13.32 | 13.32 |
| | 2-Wire ISDN Digital Grade Loop - Zone 3 | | 3 | UDN | U1L2X | 37.95 | 142.76 | 88.88 | 76.35 | 39.16 | | | 20.35 | 10.54 | 13.32 | 13.32 |
| | Order Coordination For Specified Conversion Time (per LSR) | | | UDN | OCOSL | | 34.29 | | | | | | | | | |
| | CLEC to CLEC Conversion Charge without outside dispatch | | | UDN | UREWO | | 91.77 | 44.22 | | | | | 20.35 | 10.54 | 13.32 | 13.32 |
| | **2-WIRE ASYMMETRICAL DIGITAL SUBSCRIBER LINE (ADSL) COMPATIBLE LOOP** | | | | | | | | | | | | | | | |
| | 2 Wire Unbundled ADSL Loop including manual service inquiry & facility reservation - Zone 1 | | 1 | UAL | UAL2X | 13.82 | 270.01 | 234.63 | 74.54 | 39.14 | | | 20.35 | 10.54 | 13.32 | 13.32 |
| | 2 Wire Unbundled ADSL Loop including manual service inquiry & facility reservation - Zone 2 | | 2 | UAL | UAL2X | 18.05 | 270.01 | 234.63 | 74.54 | 39.14 | | | 20.35 | 10.54 | 13.32 | 13.32 |
| | 2 Wire Unbundled ADSL Loop including manual service inquiry & facility reservation - Zone 3 | | 3 | UAL | UAL2X | 23.60 | 270.01 | 234.63 | 74.54 | 39.14 | | | 20.35 | 10.54 | 13.32 | 13.32 |
| | Order Coordination for Specified Conversion Time (per LSR) | | | UAL | OCOSL | | 34.29 | | | | | | | | | |
| | 2 Wire Unbundled ADSL Loop without manual service inquiry & facility reservaton - Zone 1 | I | 1 | UAL | UAL2W | 13.82 | 31.99 | 20.02 | 10.65 | 1.41 | | | 20.35 | 10.54 | 13.32 | 13.32 |
| | 2 Wire Unbundled ADSL Loop without manual service inquiry & facility reservaton - Zone 2 | I | 2 | UAL | UAL2W | 18.05 | 31.99 | 20.02 | 10.65 | 1.41 | | | 20.35 | 10.54 | 13.32 | 13.32 |
| | 2 Wire Unbundled ADSL Loop without manual service inquiry & facility reservaton - Zone 3 | I | 3 | UAL | UAL2W | 23.60 | 31.99 | 20.02 | 10.65 | 1.41 | | | 20.35 | 10.54 | 13.32 | 13.32 |
| | Order Coordination for Specified Conversion Time (per LSR) | | | UAL | OCOSL | | 34.29 | | | | | | | | | |
| | CLEC to CLEC Conversion Charge without outside dispatch | I | | UAL | UREWO | | 31.99 | 20.02 | | | | | 20.35 | 10.54 | 13.32 | 13.32 |
| | **2-WIRE HIGH BIT RATE DIGITAL SUBSCRIBER LINE (HDSL) COMPATIBLE LOOP** | | | | | | | | | | | | | | | |
| | 2 Wire Unbundled HDSL Loop including manual service inquiry & facility reservation - Zone 1 | | 1 | UHL | UHL2X | 10.83 | 270.01 | 234.63 | 74.54 | 39.14 | | | 20.35 | 10.54 | 13.32 | 13.32 |
| | 2 Wire Unbundled HDSL Loop including manual service inquiry & facility reservation - Zone 2 | | 2 | UHL | UHL2X | 14.15 | 270.01 | 234.63 | 74.54 | 39.14 | | | 20.35 | 10.54 | 13.32 | 13.32 |
| | 2 Wire Unbundled HDSL Loop including manual service inquiry & facility reservation - Zone 3 | | 3 | UHL | UHL2X | 18.50 | 270.01 | 234.63 | 74.54 | 39.14 | | | 20.35 | 10.54 | 13.32 | 13.32 |
| | Order Coordination for Specified Conversion Time (per LSR) | | | UHL | OCOSL | | 34.29 | | | | | | | | | |
| | 2 Wire Unbundled HDSL Loop without manual service inquiry and facility reservation - Zone 1 | I | 1 | UHL | UHL2W | 10.83 | 31.99 | 20.02 | 10.65 | 1.41 | | | 20.35 | 10.54 | 13.32 | 13.32 |
| | 2 Wire Unbundled HDSL Loop without manual service inquiry and facility reservation - Zone 2 | I | 2 | UHL | UHL2W | 14.15 | 31.99 | 20.02 | 10.65 | 1.41 | | | 20.35 | 10.54 | 13.32 | 13.32 |
| | 2 Wire Unbundled HDSL Loop without manual service inquiry and facility reservation - Zone 3 | I | 3 | UHL | UHL2W | 18.50 | 31.99 | 20.02 | 10.65 | 1.41 | | | 20.35 | 10.54 | 13.32 | 13.32 |
| | Order Coordination for Specified Conversion Time (per LSR) | | | UHL | OCOSL | | 34.29 | | | | | | | | | |
| | CLEC to CLEC Conversion Charge without outside dispatch | I | | UHL | UREWO | | 31.99 | 20.02 | | | | | 20.35 | 10.54 | 13.32 | 13.32 |
| | **4-WIRE HIGH BIT RATE DIGITAL SUBSCRIBER LINE (HDSL) COMPATIBLE LOOP** | | | | | | | | | | | | | | | |
| | 4 Wire Unbundled HDSL Loop including manual service inquiry and facility reservation - Zone 1 | | 1 | UHL | UHL4X | 13.93 | 279.60 | 244.22 | 74.54 | 39.14 | | | 20.35 | 10.54 | 13.32 | 13.32 |
| | 4-Wire Unbundled HDSL Loop including manual service inquiry and facility reservation - Zone 2 | | 2 | UHL | UHL4X | 18.20 | 279.60 | 244.22 | 74.54 | 39.14 | | | 20.35 | 10.54 | 13.32 | 13.32 |
| | 4-Wire Unbundled HDSL Loop including manual service inquiry and facility reservation - Zone 3 | | 3 | UHL | UHL4X | 23.80 | 279.60 | 244.22 | 74.54 | 39.14 | | | 20.35 | 10.54 | 13.32 | 13.32 |
| | Order Coordination for Specified Conversion Time (per LSR) | | | UHL | OCOSL | | 34.29 | | | | | | | | | |
| | 4-Wire Unbundled HDSL Loop without manual service inquiry and facility reservation - Zone 1 | I | 1 | UHL | UHL4W | 13.93 | 31.99 | 20.02 | 10.65 | 1.41 | | | 20.35 | 10.54 | 13.32 | 13.32 |
| | 4-Wire Unbundled HDSL Loop without manual service inquiry and facility reservation - Zone 2 | I | 2 | UHL | UHL4W | 18.20 | 31.99 | 20.02 | 10.65 | 1.41 | | | 20.35 | 10.54 | 13.32 | 13.32 |
| | 4-Wire Unbundled HDSL Loop without manual service inquiry and facility reservation - Zone 3 | I | 3 | UHL | UHL4W | 23.80 | 31.99 | 20.02 | 10.65 | 1.41 | | | 20.35 | 10.54 | 13.32 | 13.32 |
| | Order Coordination for Specified Conversion Time (per LSR) | | | UHL | OCOSL | | 34.29 | | | | | | | | | |
| | CLEC to CLEC Conversion Charge without outside dispatch | I | | UHL | UREWO | | 31.99 | 20.02 | | | | | 20.35 | 10.54 | 13.32 | 13.32 |
| | **4-WIRE DS1 DIGITAL LOOP** | | | | | | | | | | | | | | | |
| | 4-Wire DS1 Digital Loop - Zone 1 | | 1 | USL | USLXX | 57.73 | 313.08 | 219.72 | 96.86 | 40.45 | | | 18.98 | 8.43 | 11.95 | 11.95 |
| | 4-Wire DS1 Digital Loop - Zone 2 | | 2 | USL | USLXX | 75.40 | 313.08 | 219.72 | 96.86 | 40.45 | | | 18.98 | 8.43 | 11.95 | 11.95 |
| | 4-Wire DS1 Digital Loop - Zone 3 | | 3 | USL | USLXX | 98.59 | 313.08 | 219.72 | 96.86 | 40.45 | | | 18.98 | 8.43 | 11.95 | 11.95 |
| | Order Coordination for Specified Conversion Time (per LSR) | | | USL | OCOSL | | 34.59 | | | | | | | | | |
| | CLEC to CLEC Conversion Charge without outside dispatch | | | USL | UREWO | | 130.47 | 40.11 | | | | | 20.35 | 10.54 | 13.32 | 13.32 |
| | **4-WIRE 19.2, 56 OR 64 KBPS DIGITAL GRADE LOOP** | | | | | | | | | | | | | | | |

| UNBUNDLED NETWORK ELEMENTS - Tennessee | | | | | | | | | | | | | | Attachment: 2 | | Exhibit: A | |
|---|---|---|---|---|---|---|---|---|---|---|---|---|---|---|---|---|---|
| CATEGORY | | RATE ELEMENTS | Interim | Zone | BCS | USOC | RATES ($) | | | | | Svc Order Submitted Elec per LSR | Svc Order Submitted Manually per LSR | Incremental Charge - Manual Svc Order vs. Electronic-1st | Incremental Charge - Manual Svc Order vs. Electronic-Add'l | Incremental Charge - Manual Svc Order vs. Electronic-Disc 1st | Incremental Charge - Manual Svc Order vs. Electronic-Disc Add'l |
| | | | | | | | Rec | Nonrecurring | | Nonrecurring Disconnect | | OSS Rates ($) | | | | | |
| | | | | | | | | First | Add'l | First | Add'l | SOMEC | SOMAN | SOMAN | SOMAN | SOMAN | SOMAN |
| | | 4 Wire Unbundled Digital 19.2 Kbps | | 1 | UDL | UDL19 | 31.10 | 207.01 | 141.38 | 90.70 | 44.18 | | | 20.35 | 10.54 | 13.32 | 13.32 |
| | | 4 Wire Unbundled Digital 19.2 Kbps | | 2 | UDL | UDL19 | 40.61 | 207.01 | 141.38 | 90.70 | 44.18 | | | 20.35 | 10.54 | 13.32 | 13.32 |
| | | 4 Wire Unbundled Digital 19.2 Kbps | | 3 | UDL | UDL19 | 53.11 | 207.01 | 141.38 | 90.70 | 44.18 | | | 20.35 | 10.54 | 13.32 | 13.32 |
| | | 4 Wire Unbundled Digital Loop 56 Kbps - Zone 1 | | 1 | UDL | UDL56 | 31.10 | 207.01 | 141.38 | 90.70 | 44.18 | | | 20.35 | 10.54 | 13.32 | 13.32 |
| | | 4 Wire Unbundled Digital Loop 56 Kbps - Zone 2 | | 2 | UDL | UDL56 | 40.61 | 207.01 | 141.38 | 90.70 | 44.18 | | | 20.35 | 10.54 | 13.32 | 13.32 |
| | | 4 Wire Unbundled Digital Loop 56 Kbps - Zone 3 | | 3 | UDL | UDL56 | 53.11 | 207.01 | 141.38 | 90.70 | 44.18 | | | 20.35 | 10.54 | 13.32 | 13.32 |
| | | Order Coordination for Specified Conversion Time (per LSR) | | | UDL | OCOSL | | 34.29 | | | | | | | | | |
| | | 4 Wire Unbundled Digital Loop 64 Kbps - Zone 1 | | 1 | UDL | UDL64 | 31.10 | 207.01 | 141.38 | 90.70 | 44.18 | | | 20.35 | 10.54 | 13.32 | 13.32 |
| | | 4 Wire Unbundled Digital Loop 64 Kbps - Zone 2 | | 2 | UDL | UDL64 | 40.61 | 207.01 | 141.38 | 90.70 | 44.18 | | | 20.35 | 10.54 | 13.32 | 13.32 |
| | | 4 Wire Unbundled Digital Loop 64 Kbps - Zone 3 | | 3 | UDL | UDL64 | 53.11 | 207.01 | 141.38 | 90.70 | 44.18 | | | 20.35 | 10.54 | 13.32 | 13.32 |
| | | Order Coordination for Specified Conversion Time (per LSR) | | | UDL | OCOSL | | 34.29 | | | | | | | | | |
| | | CLEC to CLEC Conversion Charge without outside dispatch | | | UDL | UREWO | | 102.28 | 49.82 | | | | | 20.35 | 10.54 | 13.32 | 13.32 |
| | **2-WIRE Unbundled COPPER LOOP** | | | | | | | | | | | | | | | | |
| | | 2-Wire Unbundled Copper Loop-Designed including manual service inquiry & facility reservation - Zone 1 | I | 1 | UCL | UCLPB | 13.19 | 31.99 | 20.02 | 10.65 | 1.41 | | | 20.35 | 10.54 | 13.32 | 13.32 |
| | | 2-Wire Unbundled Copper Loop-Designed including manual service inquiry & facility reservation - Zone 2 | I | 2 | UCL | UCLPB | 17.23 | 31.99 | 20.02 | 10.65 | 1.41 | | | 20.35 | 10.54 | 13.32 | 13.32 |
| | | 2 Wire Unbundled Copper Loop-Designed including manual service inquiry & facility reservation - Zone 3 | I | 3 | UCL | UCLPB | 22.53 | 31.99 | 20.02 | 10.65 | 1.41 | | | 20.35 | 10.54 | 13.32 | 13.32 |
| | | Order Coordination for Unbundled Copper Loops (per loop) | | | UCL | UCLMC | | 36.52 | 36.52 | | | | | | | | |
| | | 2-Wire Unbundled Copper Loop-Designed without manual service inquiry and facility reservation - Zone 1 | I | 1 | UCL | UCLPW | 13.19 | 31.99 | 20.02 | 10.65 | 1.41 | | | 20.35 | 10.54 | 13.32 | 13.32 |
| | | 2-Wire Unbundled Copper Loop-Designed without manual service inquiry and facility reservation - Zone 2 | I | 2 | UCL | UCLPW | 17.23 | 31.99 | 20.02 | 10.65 | 1.41 | | | 20.35 | 10.54 | 13.32 | 13.32 |
| | | 2-Wire Unbundled Copper Loop-Designed without manual service inquiry and facility reservation - Zone 3 | I | 3 | UCL | UCLPW | 22.53 | 31.99 | 20.02 | 10.65 | 1.41 | | | 20.35 | 10.54 | 13.32 | 13.32 |
| | | Order Coordination for Unbundled Copper Loops (per loop) | | | UCL | UCLMC | | 36.52 | 36.52 | | | | | | | | |
| | | CLEC to CLEC Conversion Charge without outside dispatch (UCL-Des) | I | | UCL | UREWO | | 31.99 | 20.02 | | | | | 20.35 | 10.54 | 13.32 | 13.32 |
| | **4-WIRE COPPER LOOP** | | | | | | | | | | | | | | | | |
| | | 4-Wire Copper Loop-Designed including manual service inquiry and facility reservation - Zone 1 | I | 1 | UCL | UCL4S | 24.70 | 122.76 | 85.57 | 76.35 | 39.16 | | | 20.35 | 10.54 | 13.32 | 13.32 |
| | | 4-Wire Copper Loop-Designed including manual service inquiry and facility reservation - Zone 2 | I | 2 | UCL | UCL4S | 32.25 | 122.76 | 85.57 | 76.35 | 39.16 | | | 20.35 | 10.54 | 13.32 | 13.32 |
| | | 4-Wire Copper Loop-Designed including manual service inquiry and facility reservation - Zone 3 | I | 3 | UCL | UCL4S | 42.17 | 122.76 | 85.57 | 76.35 | 39.16 | | | 20.35 | 10.54 | 13.32 | 13.32 |
| | | Order Coordination for Unbundled Copper Loops (per loop) | | | UCL | UCLMC | | 36.52 | 36.52 | | | | | | | | |
| | | 4-Wire Copper Loop-Designed without manual service inquiry and facility reservation - Zone 1 | I | 1 | UCL | UCL4W | 24.70 | 122.76 | 85.57 | 76.35 | 39.16 | | | 20.35 | 10.54 | 13.32 | 13.32 |
| | | 4-Wire Copper Loop-Designed without manual service inquiry and facility reservation - Zone 2 | I | 2 | UCL | UCL4W | 32.25 | 122.76 | 85.57 | 76.35 | 39.16 | | | 20.35 | 10.54 | 13.32 | 13.32 |
| | | 4-Wire Copper Loop-Designed without manual service inquiry and facility reservation - Zone 3 | I | 3 | UCL | UCL4W | 42.17 | 122.76 | 85.57 | 76.35 | 39.16 | | | 20.35 | 10.54 | 13.32 | 13.32 |
| | | Order Coordination for Unbundled Copper Loops (per loop) | | | UCL | UCLMC | | 36.52 | 36.52 | | | | | | | | |
| | | CLEC to CLEC Conversion Charge without outside dispatch (UCL-Des) | I | | UCL | UREWO | | 31.99 | 20.02 | | | | | 20.35 | 10.54 | 13.32 | 13.32 |
| **LOOP MODIFICATION** | | | | | | | | | | | | | | | | | |
| | | Unbundled Loop Modification, Removal of Load Coils - 2 Wire pair less than or equal to 18k ft, per Unbundled Loop | | | UAL, UHL, UCL, UEQ, ULS, UEA, UEANL, UEPSR, UEPSB | ULM2L | | 65.40 | 65.40 | | | | | 20.35 | 10.54 | 13.32 | 13.32 |
| | | Unbundled Loop Modification Removal of Load Coils - 4 Wire less than or equal to 18K ft, per Unbundled Loop | | | UHL, UCL, UEA | ULM4L | | 65.40 | 65.40 | | | | | 20.35 | 10.54 | 13.32 | 13.32 |
| | | Unbundled Loop Modification Removal of Bridged Tap Removal, per unbundled loop | I | | UAL, UHL, UCL, UEQ, ULS, UEA, UEANL, UEPSR, UEPSB | ULMBT | | 65.44 | 65.44 | | | | | 20.35 | 10.54 | 13.32 | 13.32 |
| **SUB-LOOPS** | | | | | | | | | | | | | | | | | |
| | **Sub-Loop Distribution** | | | | | | | | | | | | | | | | |

## UNBUNDLED NETWORK ELEMENTS - Tennessee

| CATEGORY | | RATE ELEMENTS | Interim | Zone | BCS | USOC | RATES ($) | | | | | Svc Order Submitted Elec per LSR | Svc Order Submitted Manually per LSR | Attachment: 2 Incremental Charge - Manual Svc Order vs. Electronic-1st | Attachment: 2 Incremental Charge - Manual Svc Order vs. Electronic-Add'l | Exhibit: A Incremental Charge - Manual Svc Order vs. Electronic-Disc 1st | Exhibit: A Incremental Charge - Manual Svc Order vs. Electronic-Disc Add'l |
|---|---|---|---|---|---|---|---|---|---|---|---|---|---|---|---|---|---|
| | | | | | | | Rec | Nonrecurring | | Nonrecurring Disconnect | | | | OSS Rates ($) | | | |
| | | | | | | | | First | Add'l | First | Add'l | SOMEC | SOMAN | SOMAN | SOMAN | SOMAN | SOMAN |
| | | Sub-Loop - Per Cross Box Location - CLEC Feeder Facility Set-Up | I | | UEANL | USBSA | | 517.25 | 517.25 | | | | | 20.35 | 10.54 | 13.32 | 13.32 |
| | | Sub-Loop - Per Cross Box Location - Per 25 Pair Panel Set-Up | I | | UEANL | USBSB | | 42.68 | 42.68 | | | | | 20.35 | 10.54 | 13.32 | 13.32 |
| | | Sub-Loop - Per Building Equipment Room - CLEC Feeder Facility Set-Up | I | | UEANL | USBSC | | 313.01 | 313.01 | | | | | 20.35 | 10.54 | 13.32 | 13.32 |
| | | Sub-Loop - Per Building Equipment Room - Per 25 Pair Panel Set-Up | I | | UEANL | USBSD | | 108.06 | 108.06 | | | | | 20.35 | 10.54 | 13.32 | 13.32 |
| | | Sub-Loop Distribution Per 2-Wire Analog Voice Grade Loop - Statewide | | sw | UEANL | USBN2 | 10.02 | 148.84 | 112.34 | 73.14 | 36.65 | | | 20.35 | 10.54 | 13.32 | 13.32 |
| | | Order Coordination for Unbundled Sub-Loops, per sub-loop pair | | | UEANL | USBMC | | 34.29 | 34.29 | | | | | | | | |
| | | Sub-Loop Distribution Per 4-Wire Analog Voice Grade Loop - Zone 1 | | 1 | UEANL | USBN4 | 7.30 | 147.93 | 75.11 | 99.96 | 16.98 | | | 20.35 | 10.54 | 13.32 | 13.32 |
| | | Sub-Loop Distribution Per 4-Wire Analog Voice Grade Loop - Zone 2 | | 2 | UEANL | USBN4 | 9.54 | 147.93 | 75.11 | 99.96 | 16.98 | | | 20.35 | 10.54 | 13.32 | 13.32 |
| | | Sub-Loop Distribution Per 4-Wire Analog Voice Grade Loop - Zone 3 | | 3 | UEANL | USBN4 | 12.47 | 147.93 | 75.11 | 99.96 | 16.98 | | | 20.35 | 10.54 | 13.32 | 13.32 |
| | | Order Coordination for Unbundled Sub-Loops, per sub-loop pair | | | UEANL | USBMC | | 34.29 | 34.29 | | | | | | | | |
| | | Sub-Loop 2-Wire Intrabuilding Network Cable (INC) | I | | UEANL | USBR2 | 1.35 | 94.56 | 29.35 | | | | | 20.35 | 10.54 | 13.32 | 13.32 |
| | | Order Coordination for Unbundled Sub-Loops, per sub-loop pair | | | UEANL | USBMC | | 34.29 | 34.29 | | | | | | | | |
| | | Sub-Loop 4-Wire Intrabuilding Network Cable (INC) | I | | UEANL | USBR4 | 2.26 | 116.14 | 37.10 | | | | | 20.35 | 10.54 | 13.32 | 13.32 |
| | | Order Coordination for Unbundled Sub-Loops, per sub-loop pair | | | UEANL | USBMC | | 34.29 | 34.29 | | | | | | | | |
| | | Loop Testing - Basic 1st Half Hour | | | UEANL | URET1 | | 78.92 | 78.92 | | | | | | | | |
| | | Loop Testing - Basic Additional Half Hour | | | UEANL | URETA | | 23.33 | 23.33 | | | | | | | | |
| | | 2 Wire Copper Unbundled Sub-Loop Distribution - Zone 1 | I | 1 | UEF | UCS2X | 5.16 | 110.71 | 37.89 | 94.41 | 13.09 | | | 20.35 | 10.54 | 13.32 | 13.32 |
| | | 2 Wire Copper Unbundled Sub-Loop Distribution - Zone 2 | I | 2 | UEF | UCS2X | 6.74 | 110.71 | 37.89 | 94.41 | 13.09 | | | 20.35 | 10.54 | 13.32 | 13.32 |
| | | 2 Wire Copper Unbundled Sub-Loop Distribution - Zone 3 | I | 3 | UEF | UCS2X | 8.81 | 110.71 | 37.89 | 94.41 | 13.09 | | | 20.35 | 10.54 | 13.32 | 13.32 |
| | | Order Coordination for Unbundled Sub-Loops, per sub-loop pair | | | UEF | USBMC | | 34.29 | 34.29 | | | | | | | | |
| | | 4 Wire Copper Unbundled Sub-Loop Distribution - Zone 1 | I | 1 | UEF | UCS4X | 6.52 | 117.12 | 44.30 | 99.96 | 16.98 | | | 20.35 | 10.54 | 13.32 | 13.32 |
| | | 4 Wire Copper Unbundled Sub-Loop Distribution - Zone 2 | I | 2 | UEF | UCS4X | 8.52 | 117.12 | 44.30 | 99.96 | 16.98 | | | 20.35 | 10.54 | 13.32 | 13.32 |
| | | 4 Wire Copper Unbundled Sub-Loop Distribution - Zone 3 | I | 3 | UEF | UCS4X | 11.14 | 117.12 | 44.30 | 99.96 | 16.98 | | | 20.35 | 10.54 | 13.32 | 13.32 |
| | | Order Coordination for Unbundled Sub-Loops, per sub-loop pair | | | UEF | USBMC | | 34.29 | 34.29 | | | | | | | | |
| | | Loop Testing - Basic 1st Half Hour | | | UEF | URET1 | | 78.92 | 78.92 | | | | | | | | |
| | | Loop Testing - Basic Additional Half Hour | | | UEF | URETA | | 23.33 | 23.33 | | | | | | | | |
| | **Unbundled Network Terminating Wire (UNTW)** | | | | | | | | | | | | | | | | |
| | | Unbundled Network Terminating Wire (UNTW) per Pair | I | | UENTW | UENPP | 0.4555 | 2.48 | 2.48 | | | | | 20.35 | 10.54 | 13.32 | 13.32 |
| | **Network Interface Device (NID)** | | | | | | | | | | | | | | | | |
| | | Network Interface Device (NID) - 1-2 lines | | | UENTW | UND12 | | 89.69 | 54.56 | 0.6391 | 0.6391 | | | 20.35 | 10.54 | 13.32 | 13.32 |
| | | Network Interface Device (NID) - 1-6 lines | | | UENTW | UND16 | | 129.65 | 94.51 | 0.6522 | 0.6522 | | | 20.35 | 10.54 | 13.32 | 13.32 |
| | | Network Interface Device Cross Connect - 2 W | | | UENTW | UNDC2 | | 11.11 | 11.11 | | | | | 20.35 | 10.54 | 13.32 | 13.32 |
| | | Network Interface Device Cross Connect - 4W | | | UENTW | UNDC4 | | 11.11 | 11.11 | | | | | 20.35 | 10.54 | 13.32 | 13.32 |
| **UNE OTHER, PROVISIONING ONLY - NO RATE** | | | | | | | | | | | | | | | | | |
| | | NID - Dispatch and Service Order for NID installation | | | UENTW | UNDBX | 0.00 | 0.00 | | | | | | | | | |
| | | UNTW Circuit Id Establishment, Provisioning Only - No Rate | | | UENTW | UENCE | 0.00 | 0.00 | | | | | | | | | |
| | | Unbundled Contract Name, Provisioning Only - No Rate | | | UEANL,UEF,UEQ,UENTW | UNECN | 0.00 | 0.00 | | | | | | | | | |
| **UNE OTHER, PROVISIONING ONLY - NO RATE** | | | | | | | | | | | | | | | | | |
| | | Unbundled Contact Name, Provisioning Only - no rate | | | UAL,UCL,UDC,UDL,UDN,UEA,UHL,ULC | UNECN | 0.00 | 0.00 | | | | | | | | | |
| | | Unbundled Sub-Loop Feeder-2 Wire Cross Box Jumper - no rate | | | UEA,UDN,UCL,UDC | USBFQ | 0.00 | 0.00 | | | | | | | | | |

| UNBUNDLED NETWORK ELEMENTS - Tennessee | | | | | | | | | | | | | | Attachment: 2 | | Exhibit: A | |
|---|---|---|---|---|---|---|---|---|---|---|---|---|---|---|---|---|---|
| CATEGORY | | RATE ELEMENTS | Interim | Zone | BCS | USOC | RATES ($) | | | | | Svc Order Submitted Elec per LSR | Svc Order Submitted Manually per LSR | Incremental Charge - Manual Svc Order vs. Electronic-1st | Incremental Charge - Manual Svc Order vs. Electronic-Add'l | Incremental Charge - Manual Svc Order vs. Electronic-Disc 1st | Incremental Charge - Manual Svc Order vs. Electronic-Disc Add'l |
| | | | | | | | Rec | Nonrecurring | | Nonrecurring Disconnect | | OSS Rates ($) | | | | | |
| | | | | | | | | First | Add'l | First | Add'l | SOMEC | SOMAN | SOMAN | SOMAN | SOMAN | SOMAN |
| | | Unbundled Sub-Loop Feeder-4 Wire Cross Box Jumper - no rate | | | UEA,USL,UCL,UDL | USBFR | 0.00 | 0.00 | | | | | | | | | |
| | | Unbundled DS1 Loop - Superframe Format Option - no rate | | | USL | CCOSF | 0.00 | 0.00 | | | | | | | | | |
| | | Unbundled DS1 Loop - Expanded Superframe Format option - no rate | | | USL | CCOEF | 0.00 | 0.00 | | | | | | | | | |
| HIGH CAPACITY UNBUNDLED LOCAL LOOP | | | | | | | | | | | | | | | | | |
| | | High Capacity Unbundled Local Loop - DS3 - Per Mile per month | | | UE3 | 1L5ND | 9.19 | | | | | | | | | | |
| | | High Capacity Unbundled Local Loop - DS3 - Facility Termination per month | | | UE3 | UE3PX | 374.24 | 595.37 | 304.50 | 234.83 | 170.16 | | | 36.84 | 36.84 | | |
| | | High Capacity Unbundled Local Loop - STS-1 - Per Mile per month | | | UDLSX | 1L5ND | 9.19 | | | | | | | | | | |
| | | High Capacity Unbundled Local Loop - STS-1 - Facility Termination per month | | | UDLSX | UDLS1 | 389.35 | 595.37 | 304.50 | 215.82 | 151.15 | | | 36.84 | 36.84 | | |
| | Note (1): Rates provided in TN for both electronic and manual Loop Makeup are interim and subject to retro-active true-up adjustments pending a permanent rate ruling on these rate elements from the Tennessee Regulatory Authority. | | | | | | | | | | | | | | | | |
| LOOP MAKE-UP | | | | | | | | | | | | | | | | | |
| | | Loop Makeup - Preordering Without Reservation, per working or spare facility queried (Manual). | R | | UMK | UMKLW | | 0.76 | 0.76 | | | | | 19.99 | 19.99 | 19.99 | 19.99 |
| | | Loop Makeup - Preordering With Reservation, per spare facility queried (Manual). | R | | UMK | UMKLP | | 0.76 | 0.76 | | | | | 19.99 | 19.99 | 19.99 | 19.99 |
| | | Loop Makeup--With or Without Reservation, per working or spare facility queried (Mechanized) | R | | UMK | UMKMQ | | 0.76 | 0.76 | | | | | | | | |
| LINE SHARING AND LINE SPLITTING | | | | | | | | | | | | | | | | | |
| | NOTE 1: The Line Sharing monthly recurring rates for all installations completed from October 02, 2003 through midnight October 01, 2004 shall be billed as follows: | | | | | | | | | | | | | | | | |
| | NOTE 1: 10/02/2003 – 10/01/2004: 25% of the rate for an unbundled copper loop non-designed ("UCLND") | | | | | | | | | | | | | | | | |
| | NOTE 1: 10/02/2004 – 10/01/2005: 50% of the rate for UCLND | | | | | | | | | | | | | | | | |
| | NOTE 1: 10/02/2005 – 10/01/2006: 75% of the rate for UCLND | | | | | | | | | | | | | | | | |
| | NOTE 1: Above will apply to USOCS: ULSDT and ULSCT | | | | | | | | | | | | | | | | |
| | **NOTE 2: The Line Sharing monthly recurring rates with USOCs ULSDC and ULSCC applies only to circuits installed and inservice on or before October 1, 2003 | | | | | | | | | | | | | | | | |
| | LINE SHARING | | | | | | | | | | | | | | | | |
| | SPLITTERS-CENTRAL OFFICE BASED | | | | | | | | | | | | | | | | |
| | | Line Sharing Splitter, per System 96 Line Capacity | | | ULS | ULSDA | 100.00 | 150.00 | 0.00 | 0.00 | 0.00 | | | 20.35 | 10.54 | 13.32 | 13.32 |
| | | Line Sharing Splitter, per System 24 Line Capacity | | | ULS | ULSDB | 25.00 | 150.00 | 0.00 | 0.00 | 0.00 | | | 20.35 | 10.54 | 13.32 | 13.32 |
| | | Line Sharing-DLEC Owned Splitter in CO-CFA activaton-deactivation (per LSOD) | | | ULS | ULSDG | | 163.06 | 0.00 | 92.71 | 0.00 | | | 20.35 | 10.54 | 13.32 | 13.32 |
| | END USER ORDERING-CENTRAL OFFICE BASED LINE SHARING | | | | | | | | | | | | | | | | |
| | | Line Sharing - per Line Activation (BST Owned splitter) - OBSOLETE see **NOTE 2 | | | ULS | ULSDC | 0.61 | 40.00 | 31.39 | 0.00 | 0.00 | | | 20.35 | 10.54 | 13.32 | 13.32 |
| | | Line Share Service, TRO per line activation, BST owned splitter - Central Office Located (25% of UCLND) - please see NOTE 1 (E:10/2/2003) | | | ULS | ULSDT | 2.94 | 40.00 | 31.39 | 0.00 | 0.00 | | | | | | |
| | | Line Share Service, TRO per line activation, BST owned splitter - Central Office Located (50% of UCLND) - please see NOTE 1 (E:10/2/2004) | | | ULS | ULSDT | 5.87 | 40.00 | 31.39 | 0.00 | 0.00 | | | | | | |
| | | Line Share Service, TRO per line activation, BST owned splitter - Central Office Located (75% of UCLND) - please see NOTE 1 (E:10/2/2005) | | | ULS | ULSDT | 8.81 | 40.00 | 31.39 | 0.00 | 0.00 | | | | | | |
| | | Line Sharing - per Subsequent Activity per Line Rearrangement(BST Owned Splitter) | | | ULS | ULSDS | | 30.00 | 15.00 | | | | | 20.35 | 10.54 | 13.32 | 13.32 |
| | | Line Sharing - per Subsequent Activity per Line Rearrangement(DLEC Owned Splitter) | | | ULS | ULSCS | | 30.00 | 15.00 | | | | | 20.35 | 10.54 | 13.32 | 13.32 |
| | | Line Sharing - per Line Activation (DLEC owned Splitter) - OBSOLETE see **NOTE 2 | | | ULS | ULSCC | 0.61 | 47.44 | 19.31 | 0.00 | 0.00 | | | 20.35 | 10.54 | 13.32 | 13.32 |
| | | Line Share Service, TRO per line activation, CLEC owned splitter - Central Office Located (25% of UCLND) - please see NOTE 1 (E:10/2/2003) | | | ULS | ULSCT | 2.94 | 47.44 | 19.31 | 0.00 | 0.00 | | | | | | |
| | | Line Share Service, TRO per line activation, CLEC owned splitter - Central Office Located (50% of UCLND) - please see NOTE 1 (E:10/2/2004) | | | ULS | ULSCT | 5.87 | 47.44 | 19.31 | 0.00 | 0.00 | | | | | | |

| UNBUNDLED NETWORK ELEMENTS - Tennessee | | | | | | | | | | | | | | Attachment: 2 | | Exhibit: A | |
|---|---|---|---|---|---|---|---|---|---|---|---|---|---|---|---|---|---|
| CATEGORY | | RATE ELEMENTS | Interim | Zone | BCS | USOC | RATES ($) | | | | | Svc Order Submitted Elec per LSR | Svc Order Submitted Manually per LSR | Incremental Charge - Manual Svc Order vs. Electronic- 1st | Incremental Charge - Manual Svc Order vs. Electronic- Add'l | Incremental Charge - Manual Svc Order vs. Electronic- Disc 1st | Incremental Charge - Manual Svc Order vs. Electronic- Disc Add'l |
| | | | | | | | Rec | Nonrecurring | | Nonrecurring Disconnect | | OSS Rates ($) | | | | | |
| | | | | | | | | First | Add'l | First | Add'l | SOMEC | SOMAN | SOMAN | SOMAN | SOMAN | SOMAN |
| | | Line Share Service, TRO per line activation, CLEC owned splitter - Central Office Located (75% of UCLND) - please see NOTE 1 (E:10/2/2005) | | | ULS | ULSCT | 8.81 | 47.44 | 19.31 | 0.00 | 0.00 | | | | | | |
| | LINE SPLITTING | | | | | | | | | | | | | | | | |
| | END USER ORDERING-CENTRAL OFFICE BASED | | | | | | | | | | | | | | | | |
| | | Line Splitting - per line activation DLEC owned splitter | | | UEPSR UEPSB | UREOS | 0.61 | | | | | | | | | | |
| | | Line Splitting - per line activation BST owned - physical | | | UEPSR UEPSB | UREBP | 0.61 | 48.96 | 21.39 | 35.06 | 10.79 | | | 20.35 | 10.54 | 13.32 | 13.32 |
| | | Line Splitting - per line activation BST owned - virtual | | | UEPSR UEPSB | UREBV | 0.61 | 48.96 | 21.39 | 35.06 | 10.79 | | | 20.35 | 10.54 | 13.32 | 13.32 |
| | MAINTENANCE | | | | | | | | | | | | | | | | |
| | | No Trouble Found - per 1/2 hour increments - Basic | | | | | | 80.00 | 55.00 | | | | | | | | |
| | | No Trouble Found - per 1/2 hour increments - Overtime | | | | | | 120.00 | 82.50 | | | | | | | | |
| | | No Trouble Found - per 1/2 hour increments - Premium | | | | | | 160.00 | 110.00 | | | | | | | | |
| UNBUNDLED DEDICATED TRANSPORT | | | | | | | | | | | | | | | | | |
| | INTEROFFICE CHANNEL - DEDICATED TRANSPORT | | | | | | | | | | | | | | | | |
| | | Interoffice Channel - Dedicated Transport - 2-Wire Voice Grade - Per Mile per month | | | U1TVX | 1L5XX | 0.0054 | | | | | | | | | | |
| | | Interoffice Channel - Dedicated Transport- 2- Wire Voice Grade - Facility Termination | | | U1TVX | U1TV2 | 18.58 | 55.39 | 17.37 | 27.96 | 3.51 | | | 20.35 | 21.09 | | |
| | | Interoffice Channel - Dedicated Transpor t- 2-Wire Voice Grade Rev Bat. - Per Mile per month | | | U1TVX | 1L5XX | 0.0054 | | | | | | | | | | |
| | | Interoffice Channel - Dedicated Transport- 2- Wire VG Rev Bat. - Facility Termination | | | U1TVX | U1TR2 | 18.58 | 55.39 | 17.37 | 27.96 | 3.51 | | | 20.35 | 21.09 | | |
| | | Interoffice Channel - Dedicated Transport - 4-Wire Voice Grade - Per Mile per month | | | U1TVX | 1L5XX | 0.0054 | | | | | | | | | | |
| | | Interoffice Channel - Dedicated Transport - 4- Wire Voice Grade - Facility Termination | | | U1TVX | U1TV4 | 24.09 | 37.87 | 26.02 | 30.78 | 13.07 | | | 15.08 | 15.08 | | |
| | | Interoffice Channel - Dedicated Transport - 56 kbps - per mile per month | | | U1TDX | 1L5XX | 0.0174 | | | | | | | | | | |
| | | Interoffice Channel - Dedicated Transport - 56 kbps - Facility Termination | | | U1TDX | U1TD5 | 17.98 | 55.39 | 17.37 | 27.96 | 3.51 | | | 20.35 | 21.09 | | |
| | | Interoffice Channel - Dedicated Transport - 64 kbps - per mile per month | | | U1TDX | 1L5XX | 0.0174 | | | | | | | | | | |
| | | Interoffice Channel - Dedicated Transport - 64 kbps - Facility Termination | | | U1TDX | U1TD6 | 17.98 | 55.39 | 17.37 | 27.96 | 3.51 | | | 20.35 | 21.09 | | |
| | | Interoffice Channel - Dedicated Channel - DS1 - Per Mile per month | | | U1TD1 | 1L5XX | 0.3562 | | | | | | | | | | |
| | | Interoffice Channel - Dedicated Tranport - DS1 - Facility Termination | | | U1TD1 | U1TF1 | 77.86 | 112.40 | 76.27 | 19.55 | 14.99 | | | 20.35 | 21.09 | | |
| | | Interoffice Channel - Dedicated Transport - DS3 - Per Mile per month | | | U1TD3 | 1L5XX | 2.34 | | | | | | | | | | |
| | | Interoffice Channel - Dedicated Transport - DS3 - Facility Termination per month | | | U1TD3 | U1TF3 | 848.99 | 395.29 | 176.56 | 109.04 | 105.91 | | | 36.84 | 36.84 | | |
| | | Interoffice Channel - Dedicated Transport - STS-1 - Per Mile per month | | | U1TS1 | 1L5XX | 2.34 | | | | | | | | | | |
| | | Interoffice Channel - Dedicated Transport - STS-1 - Facility Termination | | | U1TS1 | U1TFS | 849.30 | 395.29 | 176.56 | 109.04 | 105.91 | | | 36.84 | 36.84 | | |
| DARK FIBER | | | | | | | | | | | | | | | | | |
| | | Dark Fiber, Four Fiber Strands, Per Route Mile or Fraction Thereof per month - Interoffice Channel | | | UDF, UDFCX | 1L5DF | 28.74 | | | | | | | | | | |
| | | NRC Dark Fiber - Interoffice Channel | | | UDF, UDFCX | UDF14 | | 1,121.00 | 153.19 | 580.26 | 357.17 | | | 20.35 | 10.54 | 13.32 | 13.32 |
| | | Dark Fiber, Four Fiber Strands, Per Route Mile or Fraction Thereof per month - Local Loop | | | UDF, UDFCX | 1L5DL | 58.83 | | | | | | | | | | |
| | | NRC Dark Fiber - Local Loop | | | UDF, UDFCX | UDFL4 | | 1,121.00 | 153.19 | 580.26 | 357.17 | | | 20.35 | 10.54 | 13.32 | 13.32 |
| 8XX ACCESS TEN DIGIT SCREENING | | | | | | | | | | | | | | | | | |
| | | 8XX Access Ten Digit Screening, Per Call | | | OHD | | 0.0005192 | | | | | | | | | | |
| | | 8XX Access Ten Digit Screening, Reservation Charge Per 8XX Number Reserved | | | OHD | N8R1X | | 5.21 | 0.76 | | | | | 20.35 | 20.35 | 13.28 | 13.28 |
| | | 8XX Access Ten Digit Screening, Per 8XX No. Established W/O POTS Translations | | | OHD | | | 11.47 | 1.46 | 7.34 | 0.7602 | | | 20.35 | 20.35 | 13.28 | 13.28 |

## UNBUNDLED NETWORK ELEMENTS - Tennessee

| CATEGORY | RATE ELEMENTS | Interim | Zone | BCS | USOC | RATES ($) | | | | | Svc Order Submitted Elec per LSR | Svc Order Submitted Manually per LSR | Attachment: 2 Incremental Charge - Manual Svc Order vs. Electronic-1st | Attachment: 2 Incremental Charge - Manual Svc Order vs. Electronic-Add'l | Exhibit: A Incremental Charge - Manual Svc Order vs. Electronic-Disc 1st | Exhibit: A Incremental Charge - Manual Svc Order vs. Electronic-Disc Add'l |
|---|---|---|---|---|---|---|---|---|---|---|---|---|---|---|---|---|
| | | | | | | Rec | Nonrecurring First | Nonrecurring Add'l | Nonrecurring Disconnect First | Nonrecurring Disconnect Add'l | OSS Rates ($) SOMEC | OSS Rates ($) SOMAN | SOMAN | SOMAN | SOMAN | SOMAN |
| | 8XX Access Ten Digit Screening, Per 8XX No. Established With POTS Translations | | | OHD | N8FTX | | 11.47 | 1.46 | 7.34 | 0.7602 | | | 20.35 | 20.35 | 13.28 | 13.28 |
| | 8XX Access Ten Digit Screening, Customized Area of Service Per 8XX Number | | | OHD | N8FCX | | 4.47 | 2.24 | | | | | 20.35 | 20.35 | 13.28 | 13.28 |
| | 8XX Access Ten Digit Screening, Multiple InterLATA CXR Routing Per CXR Requested Per 8XX No. | | | OHD | N8FMX | | 5.23 | 3.00 | | | | | 20.35 | 20.35 | 13.28 | 13.28 |
| | 8XX Access Ten Digit Screening, Change Charge Per Request | | | OHD | N8FAX | | 5.97 | 0.76 | | | | | 20.35 | 20.35 | 13.28 | 13.28 |
| | 8XX Access Ten Digit Screening, Call Handling and Destination Features | | | OHD | N8FDX | | 4.47 | | | | | | 20.35 | 20.35 | 13.28 | 13.28 |
| **LINE INFORMATION DATA BASE ACCESS (LIDB)** | | | | | | | | | | | | | | | | |
| | LIDB Common Transport Per Query | | | OQT | | 0.0000354 | | | | | | | | | | |
| | LIDB Validation Per Query | | | OQU | | 0.0117403 | | | | | | | | | | |
| | LIDB Originating Point Code Establishment or Change | | | OQT, OQU | NRBPX | | 49.03 | | | | | | 20.35 | 20.35 | 13.28 | 13.28 |
| **SIGNALING (CCS7)** | | | | | | | | | | | | | | | | |
| | CCS7 Signaling Termination, Per STP Port | | | UDB | PT8SX | 138.41 | | | | | | | | | | |
| | CCS7 Signaling Usage, Per TCAP Message | | | UDB | | 0.0000916 | | | | | | | | | | |
| | CCS7 Signaling Connection, Per link (A link) | | | UDB | TPP++ | 17.84 | 130.84 | 130.84 | | | | | 20.35 | 20.35 | 13.32 | 13.32 |
| | CCS7 Signaling Connection, Per link (B link) (also known as D link) | | | UDB | TPP++ | 17.84 | 130.84 | 130.84 | | | | | 20.35 | 20.35 | 13.32 | 13.32 |
| | CCS7 Signaling Usage, Per ISUP Message | | | UDB | | 0.0000373 | | | | | | | | | | |
| | CCS7 Signaling Usage Surrogate, per link per LATA | | | UDB | STU56 | 352.30 | | | | | | | | | | |
| | Signaling Point Code, per Originating Point Code Establishment or Change, per STP | | | UDB | CCAPO | | 121.77 | 121.77 | | | | | 20.35 | 20.35 | 13.32 | 13.32 |
| **CALLING NAME (CNAM) SERVICE** | | | | | | | | | | | | | | | | |
| | CNAM For DB Owners - Service Establishment | | | OQV | | | 43.27 | | | | | | | | | |
| | CNAM For Non DB Owners - Service Establishment | | | OQV | | | 43.27 | | | | | | | | | |
| | CNAM For DB Owners - Service Provisioning With Point Code Establishment | | | OQV | | | 1,868.00 | 1,382.00 | | | | | | | | |
| | CNAM For Non DB Owners - Service Provisioning With Point Code Establishment | | | OQV | | | 645.50 | 432.23 | | | | | | | | |
| | CNAM for DB Owners, Per Query | | | OQV | | 0.0010541 | | | | | | | | | | |
| | CNAM for Non DB Owners, Per Query | | | OQV | | 0.0010541 | | | | | | | | | | |
| | CNAM (Non-Databs Owner), NRC, applies when using the Character Based User Interface (CHUI) | | | OQV | CDDCH | | | | | | | | 20.35 | 20.35 | 13.28 | 13.28 |
| **SELECTIVE ROUTING** | | | | | | | | | | | | | | | | |
| | Selective Routing Per Unique Line Class Code Per Request Per Switch | | | | | | 179.60 | 179.60 | | | | | 20.35 | 20.35 | | |
| **VIRTUAL COLLOCATION** | | | | | | | | | | | | | | | | |
| | Virtual Collocation-2 Wire Cross Connects (Loop) for Line Splitting | | | UEPSR UEPSB | VE1LS | 0.57 | 11.62 | 9.90 | 10.38 | 8.66 | | | 19.99 | 19.99 | 19.99 | 19.99 |
| **PHYSICAL COLLOCATION** | | | | | | | | | | | | | | | | |
| | Physical Collocation-2 Wire Cross Connects (Loop) for Line Splitting | | | UEPSR UEPSB | PE1LS | 0.7905 | 11.62 | 9.90 | 10.38 | 8.66 | | | 19.99 | 19.99 | 19.99 | 19.99 |
| **AIN SELECTIVE CARRIER ROUTING** | | | | | | | | | | | | | | | | |
| | Regional Service Establishment | | | SRC | SRCEC | | 190,638.00 | | | | | | 20.35 | | | |
| | End Office Establishment | | | SRC | SRCEO | | 317.55 | 317.55 | 3.19 | 3.19 | | | 20.35 | 20.35 | 13.28 | 13.28 |
| | Query NRC, per query | | | SRC | | 0.0206047 | | | | | | | | | | |
| **AIN - BELLSOUTH AIN SMS ACCESS SERVICE** | | | | | | | | | | | | | | | | |
| | AIN SMS Access Service - Service Establishment, Per State, Initial Setup | | | A1N | CAMSE | | 135.56 | 135.56 | | | | | 20.35 | 20.35 | 13.28 | 13.28 |
| | AIN SMS Access Service - Port Connection - Dial/Shared Access | | | A1N | CAMDP | | 41.75 | 41.75 | | | | | 20.35 | 20.35 | 13.28 | 13.28 |
| | AIN SMS Access Service - Port Connection - ISDN Access | | | A1N | CAM1P | | 41.75 | 41.75 | | | | | 20.35 | 20.35 | 13.28 | 13.28 |
| | AIN SMS Access Service - User Identification Codes - Per User ID Code | | | A1N | CAMAU | | 96.63 | 96.63 | | | | | 20.35 | 20.35 | 13.28 | 13.28 |
| | AIN SMS Access Service - Security Card, Per User ID Code, Initial or Replacement | | | A1N | CAMRC | | 113.67 | 113.67 | | | | | 20.35 | 20.35 | 13.28 | 13.28 |
| | AIN SMS Access Service - Storage, Per Unit (100 Kilobytes) | | | | | 0.0024 | | | | | | | | | | |
| | AIN SMS Access Service - Session, Per Minute | | | | | 0.0820123 | | | | | | | | | | |

| UNBUNDLED NETWORK ELEMENTS - Tennessee | | | | | | | | | | | | | | Attachment: 2 | | Exhibit: A | |
|---|---|---|---|---|---|---|---|---|---|---|---|---|---|---|---|---|---|
| CATEGORY | | RATE ELEMENTS | Interim | Zone | BCS | USOC | RATES ($) | | | | | Svc Order Submitted Elec per LSR | Svc Order Submitted Manually per LSR | Incremental Charge - Manual Svc Order vs. Electronic-1st | Incremental Charge - Manual Svc Order vs. Electronic-Add'l | Incremental Charge - Manual Svc Order vs. Electronic-Disc 1st | Incremental Charge - Manual Svc Order vs. Electronic-Disc Add'l |
| | | | | | | | Rec | Nonrecurring | | Nonrecurring Disconnect | | OSS Rates ($) | | | | | |
| | | | | | | | | First | Add'l | First | Add'l | SOMEC | SOMAN | SOMAN | SOMAN | SOMAN | SOMAN |
| | | AIN SMS Access Service - Company Performed Session, Per Minute | | | | | 2.27 | | | | | | | | | | |
| AIN - BELLSOUTH AIN TOOLKIT SERVICE | | | | | | | | | | | | | | | | | |
| | | AIN Toolkit Service - Service Establishment Charge, Per State, Initial Setup | | | CAM | BAPSC | | 132.04 | 132.04 | | | | | 20.35 | 20.35 | 13.28 | 13.28 |
| | | AIN Toolkit Service - Training Session, Per Customer | | | | BAPVX | | 7,915.00 | 7,915.00 | | | | | 20.35 | 20.35 | 13.28 | 13.28 |
| | | AIN Toolkit Service - Trigger Access Charge, Per Trigger, Per DN, Term. Attempt | | | | BAPTT | | 31.21 | 31.21 | | | | | 20.35 | 20.35 | 13.28 | 13.28 |
| | | AIN Toolkit Service - Trigger Access Charge, Per Trigger, Per DN, Off-Hook Delay | | | | BAPTD | | 31.21 | 31.21 | | | | | 20.35 | 20.35 | 13.28 | 13.28 |
| | | AIN Toolkit Service - Trigger Access Charge, Per Trigger, Per DN, Off-Hook Immediate | | | | BAPTM | | 31.21 | 31.21 | | | | | 20.35 | 20.35 | 13.28 | 13.28 |
| | | AIN Toolkit Service - Trigger Access Charge, Per Trigger, Per DN, 10-Digit PODP | | | | BAPTO | | 85.24 | 85.24 | | | | | 20.35 | 20.35 | 13.28 | 13.28 |
| | | AIN Toolkit Service - Trigger Access Charge, Per Trigger, Per DN, CDP | | | | BAPTC | | 85.24 | 85.24 | | | | | 20.35 | 20.35 | 13.28 | 13.28 |
| | | AIN Toolkit Service - Trigger Access Charge, Per Trigger, Per DN, Feature Code | | | | BAPTF | | 85.24 | 85.24 | | | | | 20.35 | 20.35 | 13.28 | 13.28 |
| | | AIN Toolkit Service - Query Charge, Per Query | | | | | 0.0211882 | | | | | | | | | | |
| | | AIN Toolkit Service - Type 1 Node Charge, Per AIN Toolkit Subscription, Per Node, Per Query | | | | | 0.0054774 | | | | | | | | | | |
| | | AIN Toolkit Service - SCP Storage Charge, Per SMS Access Account, Per 100 Kilobytes | | | | | 1.50 | | | | | | | | | | |
| | | AIN Toolkit Service - Monthly report - Per AIN Toolkit Service Subscription | | | CAM | BAPMS | 17.43 | 33.52 | 33.52 | | | | | 20.35 | 20.35 | 13.28 | 13.28 |
| | | AIN Toolkit Service - Special Study - Per AIN Toolkit Service Subscription | | | CAM | BAPLS | 0.1321116 | 36.23 | 36.23 | | | | | 20.35 | 20.35 | 13.28 | 13.28 |
| | | AIN Toolkit Service - Call Event Report - Per AIN Toolkit Service Subscription | | | CAM | BAPDS | 17.35 | 33.52 | 33.52 | | | | | 20.35 | 20.35 | 13.28 | 13.28 |
| | | AIN Toolkit Service - Call Event Special Study - Per AIN Toolkit Service Subscription | | | CAM | BAPES | 0.0511435 | 36.23 | 36.23 | | | | | 20.35 | 20.35 | 13.28 | 13.28 |
| ENHANCED EXTENDED LINK (EELs) | | | | | | | | | | | | | | | | | |
| | NOTE: The monthly recurring and non-recurring charges below will apply and the Switch-As-Is Charge will not apply for UNE combinations provisioned as ' Ordinarily Combined' Network Elements. | | | | | | | | | | | | | | | | |
| | NOTE: The monthly recurring and the Switch-As-Is Charge and not the non-recurring charges below will apply for UNE combinations provisioned as ' Currently Combined' Network Elements. | | | | | | | | | | | | | | | | |
| | EXTENTED 2-WIRE VOICE GRADE EXTENDED LOOP WITH DEDICATED DS1 INTEROFFICE TRANSPORT | | | | | | | | | | | | | | | | |
| | | First 2-Wire VG Loop (SL2) in Combination - Zone 1 | | 1 | UNCVX | UEAL2 | 16.56 | 108.76 | 35.47 | 72.94 | 10.86 | | | 20.35 | 21.09 | | |
| | | First 2-Wire VG Loop (SL2) in Combination - Zone 2 | | 2 | UNCVX | UEAL2 | 21.63 | 108.76 | 35.47 | 72.94 | 10.86 | | | 20.35 | 21.09 | | |
| | | First 2-Wire VG Loop (SL2) in Combination - Zone 3 | | 3 | UNCVX | UEAL2 | 28.28 | 108.76 | 35.47 | 72.94 | 10.86 | | | 20.35 | 21.09 | | |
| | | Interoffice Transport - Dedicated - DS1 combination - Per Mile per month | | | UNC1X | 1L5XX | 0.3562 | | | | | | | | | | |
| | | Interoffice Transport - Dedicated - DS1 combination - Facility Termination per month | | | UNC1X | U1TF1 | 77.86 | 171.24 | 113.12 | 70.07 | 30.90 | | | 20.35 | 21.09 | | |
| | | 1/0 Channelization System in combination Per Month | | | UNC1X | MQ1 | 80.77 | 105.76 | 14.48 | 3.04 | 2.74 | | | | | | |
| | | Voice Grade COCI - Per Month | | | UNCVX | 1D1VG | 0.91 | 5.70 | 4.42 | | | | | | | | |
| | | Each Additional 2-Wire VG Loop (SL 2) in Combination - Zone 1 | | 1 | UNCVX | UEAL2 | 16.56 | 108.76 | 35.47 | 72.94 | 10.86 | | | 20.35 | 21.09 | | |
| | | Each Additional 2-Wire VG Loop (SL 2) in Combination - Zone 2 | | 2 | UNCVX | UEAL2 | 21.63 | 108.76 | 35.47 | 72.94 | 10.86 | | | 20.35 | 21.09 | | |
| | | Each Additional 2-Wire VG Loop (SL 2) in Combination - Zone 3 | | 3 | UNCVX | UEAL2 | 28.28 | 108.76 | 35.47 | 72.94 | 10.86 | | | 20.35 | 21.09 | | |
| | | Voice Grade COCI - Per Month | | | UNCVX | 1D1VG | 0.91 | 5.70 | 4.42 | | | | | | | | |
| | | Nonrecurring Currently Combined Network Elements Switch -As-Is Charge | | | UNC1X | UNCCC | | 52.73 | 24.62 | 9.12 | 9.12 | | | 20.35 | 21.09 | | |
| | EXTENDED 4-WIRE VOICE GRADE EXTENDED LOOP WITH DEDICATED DS1 INTEROFFICE TRANSPORT | | | | | | | | | | | | | | | | |
| | | First 4-Wire Analog Voice Grade Loop in Combination - Zone 1 | | 1 | UNCVX | UEAL4 | 24.70 | 108.76 | 35.47 | 72.94 | 10.86 | | | 20.35 | 21.09 | | |
| | | First 4-Wire Analog Voice Grade Loop in Combination - Zone 2 | | 2 | UNCVX | UEAL4 | 32.26 | 108.76 | 35.47 | 72.94 | 10.86 | | | 20.35 | 21.09 | | |

| UNBUNDLED NETWORK ELEMENTS - Tennessee | | | | | | | | | | | | | | Attachment: 2 | | Exhibit: A | |
|---|---|---|---|---|---|---|---|---|---|---|---|---|---|---|---|---|---|
| CATEGORY | | RATE ELEMENTS | Interim | Zone | BCS | USOC | RATES ($) | | | | | Svc Order Submitted Elec per LSR | Svc Order Submitted Manually per LSR | Incremental Charge - Manual Svc Order vs. Electronic-1st | Incremental Charge - Manual Svc Order vs. Electronic-Add'l | Incremental Charge - Manual Svc Order vs. Electronic-Disc 1st | Incremental Charge - Manual Svc Order vs. Electronic-Disc Add'l |
| | | | | | | | | Nonrecurring | | Nonrecurring Disconnect | | | | OSS Rates ($) | | | |
| | | | | | | | Rec | First | Add'l | First | Add'l | SOMEC | SOMAN | SOMAN | SOMAN | SOMAN | SOMAN |
| | | First 4-Wire Analog Voice Grade Loop in Combination - Zone 3 | | 3 | UNCVX | UEAL4 | 42.18 | 108.76 | 35.47 | 72.94 | 10.86 | | | 20.35 | 21.09 | | |
| | | Interoffice Transport - Dedicated - DS1 combination - Per Mile Per Month | | | UNC1X | 1L5XX | 0.3562 | | | | | | | | | | |
| | | Interoffice Transport - Dedicated - DS1 - Facility Termination Per Month | | | UNC1X | U1TF1 | 77.86 | 171.24 | 113.12 | 70.07 | 30.90 | | | 20.35 | 21.09 | | |
| | | 1/0 Channel System in combination Per Month | | | UNC1X | MQ1 | 80.77 | 105.76 | 14.48 | 3.04 | 2.74 | | | | | | |
| | | Voice Grade COCI in combination - per month | | | UNCVX | 1D1VG | 0.91 | 5.70 | 4.42 | | | | | | | | |
| | | Additional 4-Wire Analog Voice Grade Loop in same DS1 Interoffice Transport Combination - Zone 1 | | 1 | UNCVX | UEAL4 | 24.70 | 108.76 | 35.47 | 72.94 | 10.86 | | | 20.35 | 21.09 | | |
| | | Additional 4-Wire Analog Voice Grade Loop in same DS1 Interoffice Transport Combination - Zone 2 | | 2 | UNCVX | UEAL4 | 32.26 | 108.76 | 35.47 | 72.94 | 10.86 | | | 20.35 | 21.09 | | |
| | | Additional 4-Wire Analog Voice Grade Loop in same DS1 Interoffice Transport Combination - Zone 3 | | 3 | UNCVX | UEAL4 | 42.18 | 108.76 | 35.47 | 72.94 | 10.86 | | | 20.35 | 21.09 | | |
| | | Additional Voice Grade COCI in combination - per month | | | UNCVX | 1D1VG | 0.91 | 5.70 | 4.42 | | | | | | | | |
| | | Nonrecurring Currently Combined Network Elements Switch -As-Is Charge | | | UNC1X | UNCCC | | 52.73 | 24.62 | 9.12 | 9.12 | | | 20.35 | 21.09 | | |
| | | EXTENDED 4-WIRE 56 KBPS EXTENDED DIGITAL LOOP WITH DEDICATED DS1 INTEROFFICE TRANSPORT | | | | | | | | | | | | | | | |
| | | First 4-Wire 56Kbps Digital Grade Loop in Combination - Zone 1 | | 1 | UNCDX | UDL56 | 31.10 | 108.76 | 35.47 | 72.94 | 10.86 | | | 20.35 | 21.09 | | |
| | | First 4-Wire 56Kbps Digital Grade Loop in Combination - Zone 2 | | 2 | UNCDX | UDL56 | 40.61 | 108.76 | 35.47 | 72.94 | 10.86 | | | 20.35 | 21.09 | | |
| | | First 4-Wire 56Kbps Digital Grade Loop in Combination - Zone 3 | | 3 | UNCDX | UDL56 | 53.11 | 108.76 | 35.47 | 72.94 | 10.86 | | | 20.35 | 21.09 | | |
| | | Interoffice Transport - Dedicated - DS1 combination - Per Mile Per Month | | | UNC1X | 1L5XX | 0.3562 | | | | | | | | | | |
| | | Interoffice Transport - Dedicated - DS1 - combination Facility Termination Per Month | | | UNC1X | U1TF1 | 77.86 | 171.24 | 113.12 | 70.07 | 30.90 | | | 20.35 | 21.09 | | |
| | | 1/0 Channel System in combination Per Month | | | UNC1X | MQ1 | 80.77 | 105.76 | 14.48 | 3.04 | 2.74 | | | | | | |
| | | OCU-DP COCI (data) per month (2.4-64kbs) | | | UNCDX | 1D1DD | 0.91 | 5.70 | 4.42 | | | | | | | | |
| | | Additional 4-Wire 56Kbps Digital Grade Loop in same DS1 Interoffice Transport Combination - Zone 1 | | 1 | UNCDX | UDL56 | 31.10 | 108.76 | 35.47 | 72.94 | 10.86 | | | 20.35 | 21.09 | | |
| | | Additional 4-Wire 56Kbps Digital Grade Loop in same DS1 Interoffice Transport Combination - Zone 2 | | 2 | UNCDX | UDL56 | 40.61 | 108.76 | 35.47 | 72.94 | 10.86 | | | 20.35 | 21.09 | | |
| | | Additional 4-Wire 56Kbps Digital Grade Loop in same DS1 Interoffice Transport Combination - Zone 3 | | 3 | UNCDX | UDL56 | 53.11 | 108.76 | 35.47 | 72.94 | 10.86 | | | 20.35 | 21.09 | | |
| | | Additional OCU-DP COCI (data) - in combination per month (2.4-64kbs) | | | UNCDX | 1D1DD | 0.91 | 5.70 | 4.42 | | | | | | | | |
| | | Nonrecurring Currently Combined Network Elements Switch -As-Is Charge | | | UNC1X | UNCCC | | 52.73 | 24.62 | 9.12 | 9.12 | | | 20.35 | 21.09 | | |
| | | EXTENDED 4-WIRE 64 KBPS EXTENDED DIGITAL LOOP WITH DEDICATED DS1 INTEROFFICE TRANSPORT | | | | | | | | | | | | | | | |
| | | First 4-Wire 64Kbps Digital Grade Loop in Combination - Zone 1 | | 1 | UNCDX | UDL64 | 31.10 | 108.76 | 35.47 | 72.94 | 10.86 | | | 20.35 | 21.09 | | |
| | | First 4-Wire 64Kbps Digital Grade Loop in Combination - Zone 2 | | 2 | UNCDX | UDL64 | 40.61 | 108.76 | 35.47 | 72.94 | 10.86 | | | 20.35 | 21.09 | | |
| | | First 4-Wire 64Kbps Digital Grade Loop in Combination - Zone 3 | | 3 | UNCDX | UDL64 | 53.11 | 108.76 | 35.47 | 72.94 | 10.86 | | | 20.35 | 21.09 | | |
| | | Interoffice Transport - Dedicated - DS1 combination - Per Mile Per Month | | | UNC1X | 1L5XX | 0.3562 | | | | | | | | | | |
| | | interoffice Transport - Dedicated - DS1 combination - Facility Termination Per Month | | | UNC1X | U1TF1 | 77.86 | 171.24 | 113.12 | 70.07 | 30.90 | | | 20.35 | 21.09 | | |
| | | 1/0 Channel System in combination Per Month | | | UNC1X | MQ1 | 80.77 | 105.76 | 14.48 | 3.04 | 2.74 | | | | | | |
| | | OCU-DP COCI (data) - in combination - per month (2.4-64kbs) | | | UNCDX | 1D1DD | 0.91 | 5.70 | 4.42 | | | | | | | | |
| | | Additional 4-Wire 64Kbps Digital Grade Loop in same DS1 Interoffice Transport Combination - Zone 1 | | 1 | UNCDX | UDL64 | 31.10 | 108.76 | 35.47 | 72.94 | 10.86 | | | 20.35 | 21.09 | | |
| | | Additional 4-Wire 64Kbps Digital Grade Loop in same DS1 Interoffice Transport Combination - Zone 2 | | 2 | UNCDX | UDL64 | 40.61 | 108.76 | 35.47 | 72.94 | 10.86 | | | 20.35 | 21.09 | | |
| | | Additional 4-Wire 64Kbps Digital Grade Loop in same DS1 Interoffice Transport Combination - Zone 3 | | 3 | UNCDX | UDL64 | 53.11 | 108.76 | 35.47 | 72.94 | 10.86 | | | 20.35 | 21.09 | | |

## UNBUNDLED NETWORK ELEMENTS - Tennessee

| CATEGORY | | RATE ELEMENTS | Interim | Zone | BCS | USOC | RATES ($) | | | | | Svc Order Submitted Elec per LSR | Svc Order Submitted Manually per LSR | Attachment: 2 Incremental Charge - Manual Svc Order vs. Electronic-1st | Attachment: 2 Incremental Charge - Manual Svc Order vs. Electronic-Add'l | Exhibit: A Incremental Charge - Manual Svc Order vs. Electronic-Disc 1st | Exhibit: A Incremental Charge - Manual Svc Order vs. Electronic-Disc Add'l |
|---|---|---|---|---|---|---|---|---|---|---|---|---|---|---|---|---|---|
| | | | | | | | Rec | Nonrecurring | | Nonrecurring Disconnect | | OSS Rates ($) | | | | | |
| | | | | | | | | First | Add'l | First | Add'l | SOMEC | SOMAN | SOMAN | SOMAN | SOMAN | SOMAN |
| | | Additional OCU-DP COCI (data) - in combination - per month (2.4-64kbs) | | | UNCDX | 1D1DD | 0.91 | 5.70 | 4.42 | | | | | | | | |
| | | Nonrecurring Currently Combined Network Elements Switch -As-Is Charge | | | UNC1X | UNCCC | | 52.73 | 24.62 | 9.12 | 9.12 | | | 20.35 | 21.09 | | |
| | | **EXTENDED 4-WIRE DS1 DIGITAL EXTENDED LOOP WITH DEDICATED DS1 INTEROFFICE TRANSPORT** | | | | | | | | | | | | | | | |
| | | 4-Wire DS1 Digital Loop in Combination - Zone 1 | | 1 | UNC1X | USLXX | 57.73 | 228.40 | 161.74 | 79.87 | 24.88 | | | | | | |
| | | 4-Wire DS1 Digital Loop in Combination - Zone 2 | | 2 | UNC1X | USLXX | 75.40 | 228.40 | 161.74 | 79.87 | 24.88 | | | | | | |
| | | 4-Wire DS1 Digital Loop in Combination - Zone 3 | | 3 | UNC1X | USLXX | 98.59 | 228.40 | 161.74 | 79.87 | 24.88 | | | | | | |
| | | Interoffice Transport - Dedicated - DS1 combination - Per Mile Per Month | | | UNC1X | 1L5XX | 0.3562 | | | | | | | | | | |
| | | Interoffice Transport - Dedicated - DS1 combination - Facility Termination Per Month | | | UNC1X | U1TF1 | 77.86 | 171.24 | 113.12 | 70.07 | 30.90 | | | 20.35 | 21.09 | | |
| | | Nonrecurring Currently Combined Network Elements Switch -As-Is Charge | | | UNC1X | UNCCC | | 52.73 | 24.62 | 9.12 | 9.12 | | | 20.35 | 21.09 | | |
| | | **EXTENDED 4-WIRE DS1 DIGITAL EXTENDED LOOP WITH DEDICATED DS3 INTEROFFICE TRANSPORT** | | | | | | | | | | | | | | | |
| | | First DS1Loop in Combination - Zone 1 | | 1 | UNC1X | USLXX | 57.73 | 228.40 | 161.74 | 79.87 | 24.88 | | | 20.35 | 21.09 | | |
| | | First DS1Loop in Combination - Zone 2 | | 2 | UNC1X | USLXX | 75.40 | 228.40 | 161.74 | 79.87 | 24.88 | | | 20.35 | 21.09 | | |
| | | First DS1Loop in Combination - Zone 3 | | 3 | UNC1X | USLXX | 98.59 | 228.40 | 161.74 | 79.87 | 24.88 | | | 20.35 | 21.09 | | |
| | | Interoffice Transport - Dedicated - DS3 combination - Per Mile Per Month | | | UNC3X | 1L5XX | 2.34 | | | | | | | | | | |
| | | Interoffice Transport - Dedicated - DS3 - Facility Termination per month | | | UNC3X | U1TF3 | 854.97 | 482.01 | 153.81 | 64.43 | 35.43 | | | 36.84 | 36.84 | | |
| | | 3/1Channel System in combination per month | | | UNC3X | MQ3 | 222.98 | 156.02 | 49.41 | 17.12 | 6.77 | | | | | | |
| | | DS1 COCI in combination per month | | | UNC1X | UC1D1 | 17.58 | 5.70 | 4.42 | | | | | | | | |
| | | Additional DS1Loop in DS3 Interoffice Transport Combination - Zone 1 | | 1 | UNC1X | USLXX | 57.73 | 228.40 | 161.74 | 79.87 | 24.88 | | | 20.35 | 21.09 | | |
| | | Additional DS1Loop in DS3 Interoffice Transport Combination - Zone 2 | | 2 | UNC1X | USLXX | 75.40 | 228.40 | 161.74 | 79.87 | 24.88 | | | 20.35 | 21.09 | | |
| | | Additional DS1Loop in DS3 Interoffice Transport Combination - Zone 3 | | 3 | UNC1X | USLXX | 98.59 | 228.40 | 161.74 | 79.87 | 24.88 | | | 20.35 | 21.09 | | |
| | | Additoinal DS1 COCI in combination per month | | | UNC1X | UC1D1 | 17.58 | 5.70 | 4.42 | | | | | | | | |
| | | Nonrecurring Currently Combined Network Elements Switch -As-Is Charge | | | UNC3X | UNCCC | | 52.73 | 24.62 | 9.12 | 9.12 | | | 20.35 | 21.09 | | |
| | | **EXTENDED 2-WIRE VOICE GRADE EXTENDED LOOP/ 2 WIRE VOICE GRADE INTEROFFICE TRANSPORT** | | | | | | | | | | | | | | | |
| | | 2-WireVG Loop in combination - Zone 1 | | 1 | UNCVX | UEAL2 | 16.56 | 108.76 | 35.47 | 72.94 | 10.86 | | | | | | |
| | | 2-WireVG Loop in combination - Zone 2 | | 2 | UNCVX | UEAL2 | 21.63 | 108.76 | 35.47 | 72.94 | 10.86 | | | | | | |
| | | 2-WireVG Loop in combination - Zone 3 | | 3 | UNCVX | UEAL2 | 28.28 | 108.76 | 35.47 | 72.94 | 10.86 | | | | | | |
| | | Interoffice Transport - 2-wire VG - Dedicated- Per Mile Per Month | | | UNCVX | 1L5XX | 0.0174 | | | | | | | | | | |
| | | Interoffice Transport - 2-wire VG - Dedicated - Facility Termination per month | | | UNCVX | U1TV2 | 21.79 | 79.83 | 44.08 | 69.32 | 31.00 | | | 20.35 | 21.09 | | |
| | | Nonrecurring Currently Combined Network Elements Switch -As-Is Charge | | | UNCVX | UNCCC | | 52.73 | 24.62 | 9.12 | 9.12 | | | 20.35 | 21.09 | | |
| | | **EXTENDED 4-WIRE VOICE GRADE EXTENDED LOOP/ 4 WIRE VOICE GRADE INTEROFFICE TRANSPORT** | | | | | | | | | | | | | | | |
| | | 4-WireVG Loop in combination - Zone 1 | | 1 | UNCVX | UEAL4 | 24.70 | 108.76 | 35.47 | 72.94 | 10.86 | | | | | | |
| | | 4-WireVG Loop in combination - Zone 2 | | 2 | UNCVX | UEAL4 | 32.26 | 108.76 | 35.47 | 72.94 | 10.86 | | | | | | |
| | | 4-WireVG Loop in combination - Zone 3 | | 3 | UNCVX | UEAL4 | 42.18 | 108.76 | 35.47 | 72.94 | 10.86 | | | | | | |
| | | Interoffice Transport - 4-wire VG - Dedicated - Per Mile Per Month | | | UNCVX | 1L5XX | 0.0174 | | | | | | | | | | |
| | | Interoffice Transport - 4-wire VG - Dedicated - Facility Termination per month | | | UNCVX | U1TV4 | 27.30 | 79.83 | 44.08 | 69.32 | 31.00 | | | 20.35 | 21.09 | | |
| | | Nonrecurring Currently Combined Network Elements Switch -As-Is Charge | | | UNCVX | UNCCC | | 52.73 | 24.62 | 9.12 | 9.12 | | | 20.35 | 21.09 | | |
| | | **EXTENDED DS3 DIGITAL EXTENDED LOOP WITH DEDICATED DS3 INTEROFFICE TRANSPORT** | | | | | | | | | | | | | | | |
| | | DS3 Local Loop in combination - per mile per month | | | UNC3X | 1L5ND | 9.19 | | | | | | | | | | |
| | | DS3 Local Loop in combination - Facility Termination per month | | | UNC3X | UE3PX | 373.47 | 240.23 | 180.87 | 106.78 | 45.24 | | | | | | |
| | | Interoffice Transport - Dedicated - DS3 - Per Mile per month | | | UNC3X | 1L5XX | 2.34 | | | | | | | | | | |

| UNBUNDLED NETWORK ELEMENTS - Tennessee | | | | | | | | | | | | | | Attachment: 2 | | Exhibit: A | |
|---|---|---|---|---|---|---|---|---|---|---|---|---|---|---|---|---|---|
| CATEGORY | | RATE ELEMENTS | Interim | Zone | BCS | USOC | RATES ($) | | | | | Svc Order Submitted Elec per LSR | Svc Order Submitted Manually per LSR | Incremental Charge - Manual Svc Order vs. Electronic-1st | Incremental Charge - Manual Svc Order vs. Electronic-Add'l | Incremental Charge - Manual Svc Order vs. Electronic-Disc 1st | Incremental Charge - Manual Svc Order vs. Electronic-Disc Add'l |
| | | | | | | | Rec | Nonrecurring | | Nonrecurring Disconnect | | OSS Rates ($) | | | | | |
| | | | | | | | | First | Add'l | First | Add'l | SOMEC | SOMAN | SOMAN | SOMAN | SOMAN | SOMAN |
| | | Interoffice Transport - Dedicated - DS3 combination - Facility Termination per month | | | UNC3X | U1TF3 | 854.97 | 482.01 | 153.81 | 64.43 | 35.43 | | | 36.84 | 36.84 | | |
| | | Nonrecurring Currently Combined Network Elements Switch -As-Is Charge | | | UNC3X | UNCCC | | 52.73 | 24.62 | 9.12 | 9.12 | | | 36.84 | 36.84 | | |
| | EXTENDED STS-1 DIGITAL EXTENDED LOOP WITH DEDICATED STS-1 INTEROFFICE TRANSPORT | | | | | | | | | | | | | | | | |
| | | STS-1 Local Lolp in combination - per mile per month | | | UNCSX | 1L5ND | 9.19 | | | | | | | | | | |
| | | STS-1 Local Loop in combination - Facility Termination per month | | | UNCSX | UDLS1 | 394.56 | 240.23 | 180.87 | 106.78 | 45.24 | | | | | | |
| | | Interoffice Transport - Dedicated - STS-1 combination - per mile per month | | | UNCSX | 1L5XX | 2.34 | | | | | | | | | | |
| | | Interoffice Transport - Dedicated - STS-1 combination - Facility Termination per month | | | UNCSX | U1TFS | 849.30 | 482.01 | 153.81 | 64.43 | 35.43 | | | 36.84 | 36.84 | | |
| | | Nonrecurring Currently Combined Network Elements Switch -As-Is Charge | | | UNCSX | UNCCC | | 52.73 | 24.62 | 9.12 | 9.12 | | | 36.84 | 36.84 | | |
| | EXTENDED 2-WIRE ISDN EXTENDED LOOP WITH DS1 INTEROFFICE TRANSPORT | | | | | | | | | | | | | | | | |
| | | First 2-Wire ISDN Loop in Combination - Zone 1 | | 1 | UNCNX | U1L2X | 22.22 | 108.76 | 35.47 | 72.94 | 10.86 | | | 20.35 | 21.09 | | |
| | | First 2-Wire ISDN Loop in Combination - Zone 2 | | 2 | UNCNX | U1L2X | 29.02 | 108.76 | 35.47 | 72.94 | 10.86 | | | 20.35 | 21.09 | | |
| | | First 2-Wire ISDN Loop in Combination - Zone 3 | | 3 | UNCNX | U1L2X | 37.95 | 108.76 | 35.47 | 72.94 | 10.86 | | | 20.35 | 21.09 | | |
| | | Interoffice Transport - Dedicated - DS1 combination - per mile per month | | | UNC1X | 1L5XX | 0.3562 | | | | | | | | | | |
| | | Interoffice Transport - Dedicated - DS1 combination - Facility Termination per month | | | UNC1X | U1TF1 | 77.86 | 171.24 | 113.12 | 70.07 | 30.90 | | | 20.35 | 21.09 | | |
| | | 1/0 Channel System in combination - per month | | | UNC1X | MQ1 | 80.77 | 105.76 | 14.48 | 3.04 | 2.74 | | | | | | |
| | | 2-wire ISDN COCI (BRITE) - in combination - per month | | | UNCNX | UC1CA | 3.24 | 5.70 | 4.42 | | | | | | | | |
| | | Additional 2-wire ISDN Loop in same DS1Interoffice Transport Combination - Zone 1 | | 1 | UNCNX | U1L2X | 22.22 | 108.76 | 35.47 | 72.94 | 10.86 | | | 20.35 | 21.09 | | |
| | | Additional 2-wire ISDN Loop in same DS1Interoffice Transport Combination - Zone 2 | | 2 | UNCNX | U1L2X | 29.02 | 108.76 | 35.47 | 72.94 | 10.86 | | | 20.35 | 21.09 | | |
| | | Additional 2-wire ISDN Loop in same DS1Interoffice Transport Combination - Zone 3 | | 3 | UNCNX | U1L2X | 37.95 | 108.76 | 35.47 | 72.94 | 10.86 | | | 20.35 | 21.09 | | |
| | | Additional 2-wire ISDN COCI (BRITE) - in combination- per month | | | UNCNX | UC1CA | 3.24 | 5.70 | 4.42 | | | | | | | | |
| | | Nonrecurring Currently Combined Network Elements Switch -As-Is Charge | | | UNC1X | UNCCC | | 52.73 | 24.62 | 9.12 | 9.12 | | | 20.35 | 21.09 | | |
| | EXTENDED 4-WIRE DS1 DIGITAL EXTENDED LOOP WITH DEDICATED STS-1 INTEROFFICE TRANSPORT | | | | | | | | | | | | | | | | |
| | | First DS1 Loop Combination - Zone 1 | | 1 | UNC1X | USLXX | 57.73 | 228.40 | 161.74 | 79.87 | 24.88 | | | 20.35 | 21.09 | | |
| | | First DS1 Loop Combination - Zone 2 | | 2 | UNC1X | USLXX | 75.40 | 228.40 | 161.74 | 79.87 | 24.88 | | | 20.35 | 21.09 | | |
| | | First DS1 Loop Combination - Zone 3 | | 3 | UNC1X | USLXX | 98.59 | 228.40 | 161.74 | 79.87 | 24.88 | | | 20.35 | 21.09 | | |
| | | Interoffice Transport - Dedicated - STS-1 combination - Per Mile Per Month | | | UNCSX | 1L5XX | 2.34 | | | | | | | | | | |
| | | Interoffice Transport - Dedicated - STS-1 combination - Facility Termination per month | | | UNCSX | U1TFS | 849.30 | 482.01 | 153.81 | 64.43 | 35.43 | | | 36.84 | 36.84 | | |
| | | 3/1 Channel System in combination per month | | | UNCSX | MQ3 | 222.98 | 156.02 | 49.41 | 17.12 | 6.77 | | | | | | |
| | | DS1 COCI in combination per month | | | UNC1X | UC1D1 | 17.58 | 5.70 | 4.42 | | | | | | | | |
| | | Additional DS1Loop in the same STS-1 Interoffice Transport Combination - Zone 1 | | 1 | UNC1X | USLXX | 57.73 | 228.40 | 161.74 | 79.87 | 24.88 | | | 20.35 | 21.09 | | |
| | | Additional DS1Loop in the same STS-1 Interoffice Transport Combination - Zone 2 | | 2 | UNC1X | USLXX | 75.40 | 228.40 | 161.74 | 79.87 | 24.88 | | | 20.35 | 21.09 | | |
| | | Additional DS1Loop in the same STS-1 Interoffice Transport Combination - Zone 3 | | 3 | UNC1X | USLXX | 98.59 | 228.40 | 161.74 | 79.87 | 24.88 | | | 20.35 | 21.09 | | |
| | | DS1 COCI in combination per month | | | UNC1X | UC1D1 | 17.58 | 5.70 | 4.42 | | | | | | | | |
| | | Nonrecurring Currently Combined Network Elements Switch -As-Is Charge | | | UNCSX | UNCCC | | 52.73 | 24.62 | 9.12 | 9.12 | | | 36.84 | 36.84 | | |
| | EXTENDED 4-WIRE 56 KBPS DIGITAL EXTENDED LOOP WITH 56 KBPS INTEROFFICE TRANSPORT | | | | | | | | | | | | | | | | |
| | | 4-wire 56 kbps Local Loop in combination - Zone 1 | | 1 | UNCDX | UDL56 | 31.10 | 108.76 | 35.47 | 72.94 | 10.86 | | | | | | |
| | | 4-wire 56 kbps Local Loop in combination - Zone 2 | | 2 | UNCDX | UDL56 | 40.61 | 108.76 | 35.47 | 72.94 | 10.86 | | | | | | |
| | | 4-wire 56 kbps Local Loop in combination - Zone 3 | | 3 | UNCDX | UDL56 | 53.11 | 108.76 | 35.47 | 72.94 | 10.86 | | | | | | |
| | | Interoffice Transport - Dedicated - 4-wire 56 kbps combination - Per Mile per month | | | UNCDX | 1L5XX | 0.0174 | | | | | | | | | | |

| UNBUNDLED NETWORK ELEMENTS - Tennessee | | | | | | | | | | | | | | Attachment: 2 | | Exhibit: A | |
|---|---|---|---|---|---|---|---|---|---|---|---|---|---|---|---|---|---|
| CATEGORY | | RATE ELEMENTS | Interim | Zone | BCS | USOC | RATES ($) | | | | | Svc Order Submitted Elec per LSR | Svc Order Submitted Manually per LSR | Incremental Charge - Manual Svc Order vs. Electronic-1st | Incremental Charge - Manual Svc Order vs. Electronic-Add'l | Incremental Charge - Manual Svc Order vs. Electronic-Disc 1st | Incremental Charge - Manual Svc Order vs. Electronic-Disc Add'l |
| | | | | | | | Rec | Nonrecurring | | Nonrecurring Disconnect | | OSS Rates ($) | | | | | |
| | | | | | | | | First | Add'l | First | Add'l | SOMEC | SOMAN | SOMAN | SOMAN | SOMAN | SOMAN |
| | | Interoffice Transport - Dedicated - 4-wire 56 kbps combination - Facility Termination per month | | | UNCDX | U1TD5 | 21.19 | 79.83 | 44.08 | 69.32 | 31.00 | | | 20.35 | 21.09 | | |
| | | Nonrecurring Currently Combined Network Elements Switch -As-Is Charge | | | UNCDX | UNCCC | | 52.73 | 24.62 | 9.12 | 9.12 | | | 20.35 | 21.09 | | |
| | EXTENDED 4-WIRE 64 KBPS DIGITAL EXTENDED LOOP WITH 64 KBPS INTEROFFICE TRANSPORT | | | | | | | | | | | | | | | | |
| | | 4-wire 64 kbps Lcoal Loop in Combination - Zone 1 | | 1 | UNCDX | UDL64 | 31.10 | 108.76 | 35.47 | 72.94 | 10.86 | | | | | | |
| | | 4-wire 64 kbps Lcoal Loop in Combination - Zone 2 | | 2 | UNCDX | UDL64 | 40.61 | 108.76 | 35.47 | 72.94 | 10.86 | | | | | | |
| | | 4-wire 64 kbps Lcoal Loop in Combination - Zone 3 | | 3 | UNCDX | UDL64 | 53.11 | 108.76 | 35.47 | 72.94 | 10.86 | | | | | | |
| | | Interoffice Transport - Dedicated - 4-wire 64 kbps combination - Per Mile per month | | | UNCDX | 1L5XX | 0.0174 | | | | | | | | | | |
| | | Interoffice Transport - Dedicated - 4-wire 64 kbps combination - Facility Termination per month | | | UNCDX | U1TD6 | 21.19 | 79.83 | 44.08 | 69.32 | 31.00 | | | 20.35 | 21.09 | | |
| | | Nonrecurring Currently Combined Network Elements Switch -As-Is Charge | | | UNCDX | UNCCC | | 52.73 | 24.62 | 9.12 | 9.12 | | | 20.35 | 21.09 | | |
| | EXTENDED 2-WIRE VOICE GRADE LOOP WITH DS1 INTEROFFICE TRANSPORT w/ 3/1 MUX | | | | | | | | | | | | | | | | |
| | | First 2-wire VG Loop (SL2) in Combination - Zone 1 | | 1 | UNCVX | UEAL2 | 16.56 | 108.76 | 35.47 | 72.94 | 10.86 | | | 20.35 | 21.09 | | |
| | | First 2-wire VG Loop (SL2) in Combination - Zone 2 | | 2 | UNCVX | UEAL2 | 21.63 | 108.76 | 35.47 | 72.94 | 10.86 | | | 20.35 | 21.09 | | |
| | | First 2-wire VG Loop (SL2) in Combination - Zone 3 | | 3 | UNCVX | UEAL2 | 28.28 | 108.76 | 35.47 | 72.94 | 10.86 | | | 20.35 | 21.09 | | |
| | | First Interoffice Transport - Dedicated - DS1 combination - Per Mile | | | UNC1X | 1L5XX | 0.3562 | | | | | | | | | | |
| | | First Interoffice Transport - Dedicated - DS1 combination - Facility Termination per month | | | UNC1X | U1TF1 | 77.86 | 171.24 | 113.12 | 70.07 | 30.90 | | | 20.35 | 21.09 | | |
| | | Per each DS1 Channellzation System Per Month | | | UNC1X | MQ1 | 80.77 | 105.76 | 14.48 | 3.04 | 2.74 | | | | | | |
| | | Per each Voice Grade COCI - Per Month per month | | | UNCVX | 1D1VG | 0.91 | 5.70 | 4.42 | | | | | | | | |
| | | 3/1 Channel System in combination per month | | | UNC3X | MQ3 | 222.98 | 156.02 | 49.41 | 17.12 | 6.77 | | | 36.84 | 36.84 | | |
| | | Per each DS1 COCI in combination per month | | | UNC1X | UC1D1 | 17.58 | 5.70 | 4.42 | | | | | | | | |
| | | Each Additional 2-Wire VG Loop(SL 2) in the same DS1 Interoffice Transport Combination - Zone 1 | | 1 | UNCVX | UEAL2 | 16.56 | 108.76 | 35.47 | 72.94 | 10.86 | | | 20.35 | 21.09 | | |
| | | Each Additional 2-Wire VG Loop(SL2) in the same DS1 Interoffice Transport Combination - Zone 2 | | 2 | UNCVX | UEAL2 | 21.63 | 108.76 | 35.47 | 72.94 | 10.86 | | | 20.35 | 21.09 | | |
| | | Each Additional 2-Wire VG Loop(SL2) in the same DS1 Interoffice Transport Combination - Zone 3 | | 3 | UNCVX | UEAL2 | 28.28 | 108.76 | 35.47 | 72.94 | 10.86 | | | 20.35 | 21.09 | | |
| | | Each Additional Voice Grade COCI in combination - per month | | | UNCVX | 1D1VG | 0.91 | 5.70 | 4.42 | | | | | | | | |
| | | Each Additional DS1 Interoffice Channel per mile in same 3/1 Channel System per month | | | UNC1X | 1L5XX | 0.3562 | | | | | | | | | | |
| | | Each Additional DS1 Interoffice Channel Facility Termination in same 3/1 Channel System per month | | | UNC1X | U1TF1 | 77.86 | 171.24 | 113.12 | 70.07 | 30.90 | | | 20.35 | 21.09 | | |
| | | Each Additional DS1 COCI combination per month | | | UNC1X | UC1D1 | 17.58 | 5.70 | 4.42 | | | | | | | | |
| | | Nonrecurring Currently Combined Network Elements Switch -As-Is Charge | | | UNC1X | UNCCC | | 52.73 | 24.62 | 9.12 | 9.12 | | | 20.35 | 21.09 | | |
| | EXTENDED 4-WIRE VOICE GRADE LOOP WITH DEDICATED DS1 INTEROFFICE TRANSPORT w/ 3/1 MUX | | | | | | | | | | | | | | | | |
| | | First 4-Wire Analog Voice Grade Local Loop in Combination - Zone 1 | | 1 | UNCVX | UEAL4 | 24.70 | 108.76 | 35.47 | 72.94 | 10.86 | | | 20.35 | 21.09 | | |
| | | First 4-Wire Analog Voice Grade Local Loop in Combination - Zone 2 | | 2 | UNCVX | UEAL4 | 32.26 | 108.76 | 35.47 | 72.94 | 10.86 | | | 20.35 | 21.09 | | |
| | | First 4-Wire Analog Voice Grade Local Loop in Combination - Zone 3 | | 3 | UNCVX | UEAL4 | 42.18 | 108.76 | 35.47 | 72.94 | 10.86 | | | 20.35 | 21.09 | | |
| | | First Interoffice Transport - Dedicated - DS1 combination - Per Mile Per Month | | | UNC1X | 1L5XX | 0.3562 | | | | | | | | | | |
| | | First Interoffice Transport - Dedicated - DS1 - Facility Termination Per Month | | | UNC1X | U1TF1 | 77.86 | 171.24 | 113.12 | 70.07 | 30.90 | | | 20.35 | 21.09 | | |
| | | Per each 1/0 Channel System in combination Per Month | | | UNC1X | MQ1 | 80.77 | 105.76 | 14.48 | 3.04 | 2.74 | | | | | | |
| | | Per each Voice Grade COCI in combination - per month | | | UNCVX | 1D1VG | 0.91 | 5.70 | 4.42 | | | | | | | | |
| | | 3/1 Channel System in combination per month | | | UNC3X | MQ3 | 222.98 | 156.02 | 49.41 | 17.12 | 6.77 | | | 36.84 | 36.84 | | |
| | | Per each DS1 COCI in combination per month | | | UNC1X | UC1D1 | 17.58 | 5.70 | 4.42 | | | | | | | | |
| | | Additional 4-Wire Analog Voice Grade Loop in same DS1 Interoffice Transport Combination - Zone 1 | | 1 | UNCVX | UEAL4 | 24.70 | 108.76 | 35.47 | 72.94 | 10.86 | | | 20.35 | 21.09 | | |
| | | Additional 4-Wire Analog Voice Grade Loop in same DS1 Interoffice Transport Combination - Zone 2 | | 2 | UNCVX | UEAL4 | 32.26 | 108.76 | 35.47 | 72.94 | 10.86 | | | 20.35 | 21.09 | | |

## UNBUNDLED NETWORK ELEMENTS - Tennessee

| CATEGORY | | RATE ELEMENTS | Interim | Zone | BCS | USOC | RATES ($) | | | | | Svc Order Submitted Elec per LSR | Svc Order Submitted Manually per LSR | Attachment: 2 Incremental Charge - Manual Svc Order vs. Electronic-1st | Attachment: 2 Incremental Charge - Manual Svc Order vs. Electronic-Add'l | Exhibit: A Incremental Charge - Manual Svc Order vs. Electronic-Disc 1st | Exhibit: A Incremental Charge - Manual Svc Order vs. Electronic-Disc Add'l |
|---|---|---|---|---|---|---|---|---|---|---|---|---|---|---|---|---|---|
| | | | | | | | Rec | Nonrecurring | | Nonrecurring Disconnect | | OSS Rates ($) | | | | | |
| | | | | | | | | First | Add'l | First | Add'l | SOMEC | SOMAN | SOMAN | SOMAN | SOMAN | SOMAN |
| | | Additional 4-Wire Analog Voice Grade Loop in same DS1 Interoffice Transport Combination - Zone 3 | | 3 | UNCVX | UEAL4 | 42.18 | 108.76 | 35.47 | 72.94 | 10.86 | | | 20.35 | 21.09 | | |
| | | Each Additional DS1 Interoffice Channel per mile in same 3/1 Channel System per month | | | UNC1X | 1L5XX | 0.3562 | | | | | | | | | | |
| | | Each Additional DS1 Interoffice Channel Facility Termination in same 3/1 Channel System per month | | | UNC1X | U1TF1 | 77.86 | 171.24 | 113.12 | 70.07 | 30.90 | | | 20.35 | 21.09 | | |
| | | Additional Voice Grade COCI - in combination - per month | | | UNCVX | 1D1VG | 0.91 | 5.70 | 4.42 | | | | | | | | |
| | | Nonrecurring Currently Combined Network Elements Switch -As-Is Charge | | | UNC1X | UNCCC | | 52.73 | 24.62 | 9.12 | 9.12 | | | 20.35 | 21.09 | | |
| | | **EXTENDED 4-WIRE 56 KBPS DIGITAL LOOP WITH DEDICATED DS1 INTEROFFICE TRANSPORT w/ 3/1 MUX** | | | | | | | | | | | | | | | |
| | | First 4-Wire 56Kbps Digital Grade Local Loop in Combination - Zone 1 | | 1 | UNCDX | UDL56 | 31.10 | 108.76 | 35.47 | 72.94 | 10.86 | | | 20.35 | 21.09 | | |
| | | First 4-Wire 56Kbps Digital Grade Local Loop in Combination - Zone 2 | | 2 | UNCDX | UDL56 | 40.61 | 108.76 | 35.47 | 72.94 | 10.86 | | | 20.35 | 21.09 | | |
| | | First 4-Wire 56Kbps Digital Grade Local Loop in Combination - Zone 3 | | 3 | UNCDX | UDL56 | 53.11 | 108.76 | 35.47 | 72.94 | 10.86 | | | 20.35 | 21.09 | | |
| | | First Interoffice Transport - Dedicated - DS1 combination - Per Mile Per Month | | | UNC1X | 1L5XX | 0.3562 | | | | | | | | | | |
| | | First Interoffice Transport - Dedicated - DS1 - combination Facility Termination Per Month | | | UNC1X | U1TF1 | 77.86 | 171.24 | 113.12 | 70.07 | 30.90 | | | 20.35 | 21.09 | | |
| | | Per each 1/0 Channel System in combination Per Month | | | UNC1X | MQ1 | 80.77 | 105.76 | 14.48 | 3.04 | 2.74 | | | | | | |
| | | Per each OCU-DP COCI (data) COCI per month (2.4-64kbs) | | | UNCDX | 1D1DD | 0.91 | 5.70 | 4.42 | | | | | | | | |
| | | 3/1 Channel System in combination per month | | | UNC3X | MQ3 | 222.98 | 156.02 | 49.41 | 17.12 | 6.77 | | | 36.84 | 36.84 | | |
| | | Per each DS1 COCI in combination per month | | | UNC1X | UC1D1 | 17.58 | 5.70 | 4.42 | | | | | | | | |
| | | Additional 4-Wire 56Kbps Digital Grade Loop in same DS1 Interoffice Transport Combination - Zone 1 | | 1 | UNCDX | UDL56 | 31.10 | 108.76 | 35.47 | 72.94 | 10.86 | | | 20.35 | 21.09 | | |
| | | Additional 4-Wire 56Kbps Digital Grade Loop in same DS1 Interoffice Transport Combination - Zone 2 | | 2 | UNCDX | UDL56 | 40.61 | 108.76 | 35.47 | 72.94 | 10.86 | | | 20.35 | 21.09 | | |
| | | Additional 4-Wire 56Kbps Digital Grade Loop in same DS1 Interoffice Transport Combination - Zone 3 | | 3 | UNCDX | UDL56 | 53.11 | 108.76 | 35.47 | 72.94 | 10.86 | | | 20.35 | 21.09 | | |
| | | OCU-DP COCI (data) COCI in combination per month (2.4-64kbs) | | | UNCDX | 1D1DD | 0.91 | 5.70 | 4.42 | | | | | | | | |
| | | Each Additional DS1 Interoffice Channel per mile in same 3/1 Channel System per month | | | UNC1X | 1L5XX | 0.3562 | | | | | | | | | | |
| | | Each Additional DS1 Interoffice Channel Facility Termination in same 3/1 Channel System per month | | | UNC1X | U1TF1 | 77.86 | 171.24 | 113.12 | 70.07 | 30.90 | | | 20.35 | 21.09 | | |
| | | Each Additional DS1 COCI in the same 3/1 channel system combination per month | | | UNC1X | UC1D1 | 17.58 | 5.70 | 4.42 | | | | | | | | |
| | | Nonrecurring Currently Combined Network Elements Switch -As-Is Charge | | | UNC1X | UNCCC | | 52.73 | 24.62 | 9.12 | 9.12 | | | 20.35 | 21.09 | | |
| | | **EXTENDED 4-WIRE 64 KBPS DIGITAL LOOP WITH DEDICATED DS1 INTEROFFICE TRANSPORT w/ 3/1 MUX** | | | | | | | | | | | | | | | |
| | | First 4-Wire 64Kbps Digital Grade Loop in a DS1 Interoffice Transport Combination - Zone 1 | | 1 | UNCDX | UDL64 | 31.10 | 108.76 | 35.47 | 72.94 | 10.86 | | | 20.35 | 21.09 | | |
| | | First 4-Wire 64Kbps Digital Grade Loop in a DS1 Interoffice Transport Combination - Zone 2 | | 2 | UNCDX | UDL64 | 40.61 | 108.76 | 35.47 | 72.94 | 10.86 | | | 20.35 | 21.09 | | |
| | | First 4-Wire 64Kbps Digital Grade Loop in a DS1 Interoffice Transport Combination - Zone 3 | | 3 | UNCDX | UDL64 | 53.11 | 108.76 | 35.47 | 72.94 | 10.86 | | | 20.35 | 21.09 | | |
| | | First Interoffice Transport - Dedicated - DS1 combination - Per Mile Per Month | | | UNC1X | 1L5XX | 0.3562 | | | | | | | | | | |
| | | First Interoffice Transport - Dedicated - DS1 combination - Facility Termination Per Month | | | UNC1X | U1TF1 | 77.86 | 171.24 | 113.12 | 70.07 | 30.90 | | | 20.35 | 21.09 | | |
| | | Per each Channel System 1/0 in combination Per Month | | | UNC1X | MQ1 | 80.77 | 105.76 | 14.48 | 3.04 | 2.74 | | | | | | |
| | | Per each OCU-DP COCI (data) in combination - per month (2.4-64kbs) | | | UNCDX | 1D1DD | 0.91 | 5.70 | 4.42 | | | | | | | | |
| | | 3/1 Channel System in combination per month | | | UNC3X | MQ3 | 222.98 | 156.02 | 49.41 | 17.12 | 6.77 | | | 36.84 | 36.84 | | |
| | | Per each DS1 COCI in combination per month | | | UNC1X | UC1D1 | 17.58 | 5.70 | 4.42 | | | | | | | | |
| | | Additional 4-Wire 64Kbps Digital Grade Loop in same DS1 Interoffice Transport Combination - Zone 1 | | 1 | UNCDX | UDL64 | 31.10 | 108.76 | 35.47 | 72.94 | 10.86 | | | 20.35 | 21.09 | | |

| UNBUNDLED NETWORK ELEMENTS - Tennessee | | | | | | | | | | | | | | Attachment: 2 | | Exhibit: A | |
|---|---|---|---|---|---|---|---|---|---|---|---|---|---|---|---|---|---|
| CATEGORY | | RATE ELEMENTS | Interim | Zone | BCS | USOC | RATES ($) | | | | | Svc Order Submitted Elec per LSR | Svc Order Submitted Manually per LSR | Incremental Charge - Manual Svc Order vs. Electronic-1st | Incremental Charge - Manual Svc Order vs. Electronic-Add'l | Incremental Charge - Manual Svc Order vs. Electronic-Disc 1st | Incremental Charge - Manual Svc Order vs. Electronic-Disc Add'l |
| | | | | | | | Rec | Nonrecurring | | Nonrecurring Disconnect | | OSS Rates ($) | | | | | |
| | | | | | | | | First | Add'l | First | Add'l | SOMEC | SOMAN | SOMAN | SOMAN | SOMAN | SOMAN |
| | | Additional 4-Wire 64Kbps Digital Grade Loop in same DS1 Interoffice Transport Combination - Zone 2 | | 2 | UNCDX | UDL64 | 40.61 | 108.76 | 35.47 | 72.94 | 10.86 | | | 20.35 | 21.09 | | |
| | | Additional 4-Wire 64Kbps Digital Grade Loop in same DS1 Interoffice Transport Combination - Zone 3 | | 3 | UNCDX | UDL64 | 53.11 | 108.76 | 35.47 | 72.94 | 10.86 | | | 20.35 | 21.09 | | |
| | | Additional OCU-DP COCI (data) - DS1 to DS0 Channel System combination - per month (2.4-64kbs) | | | UNCDX | 1D1DD | 0.91 | 5.70 | 4.42 | | | | | | | | |
| | | Each Additional DS1 Interoffice Channel per mile in same 3/1 Channel System per month | | | UNC1X | 1L5XX | 0.3562 | | | | | | | | | | |
| | | Each Additional DS1 Interoffice Channel Facility Termination in same 3/1 Channel System per month | | | UNC1X | U1TF1 | 77.86 | 171.24 | 113.12 | 70.07 | 30.90 | | | 20.35 | 21.09 | | |
| | | Each Additional DS1 COCI in the same 3/1 channel system combination per month | | | UNC1X | UC1D1 | 17.58 | 5.70 | 4.42 | | | | | | | | |
| | | Nonrecurring Currently Combined Network Elements Switch -As-Is Charge | | | UNC1X | UNCCC | | 52.73 | 24.62 | 9.12 | 9.12 | | | 20.35 | 21.09 | | |
| | | EXTENDED 2-WIRE ISDN LOOP WITH DS1 INTEROFFICE TRANSPORT w/ 3/1 MUX | | | | | | | | | | | | | | | |
| | | First 2-Wire ISDN Loop in a DS1 Interoffice Combination Transport - Zone 1 | | 1 | UNCNX | U1L2X | 22.22 | 108.76 | 35.47 | 72.94 | 10.86 | | | 20.35 | 21.09 | | |
| | | First 2-Wire ISDN Loop in a DS1 Interoffice Combination Transport - Zone 2 | | 2 | UNCNX | U1L2X | 29.02 | 108.76 | 35.47 | 72.94 | 10.86 | | | 20.35 | 21.09 | | |
| | | First 2-Wire ISDN Loop in a DS1 Interoffice Combination Transport - Zone 3 | | 3 | UNCNX | U1L2X | 37.95 | 108.76 | 35.47 | 72.94 | 10.86 | | | 20.35 | 21.09 | | |
| | | First Interoffice Transport - Dedicated - DS1 combination - Per Mile per month | | | UNC1X | 1L5XX | 0.3562 | | | | | | | | | | |
| | | First Interoffice Transport - Dedicated - DS1 combination - Facility Termination per month | | | UNC1X | U1TF1 | 77.86 | 171.24 | 113.12 | 70.07 | 30.90 | | | 20.35 | 21.09 | | |
| | | Per each Channel System 1/0 in combination - per month | | | UNC1X | MQ1 | 80.77 | 105.76 | 14.48 | 3.04 | 2.74 | | | | | | |
| | | Per each 2-wire ISDN COCI (BRITE) in combination - per month | | | UNCNX | UC1CA | 3.24 | 5.70 | 4.42 | | | | | | | | |
| | | 3/1 Channel System in combination per month | | | UNC3X | MQ3 | 222.98 | 156.02 | 49.41 | 17.12 | 6.77 | | | 36.84 | 36.84 | | |
| | | Per each DS1 COCI in combination per month | | | UNC1X | UC1D1 | 17.58 | 5.70 | 4.42 | | | | | | | | |
| | | Additional 2-wire ISDN Loop in same DS1Interoffice Transport Combination - Zone 1 | | 1 | UNCNX | U1L2X | 22.22 | 108.76 | 35.47 | 72.94 | 10.86 | | | 20.35 | 21.09 | | |
| | | Additional 2-wire ISDN Loop in same DS1Interoffice Transport Combination - Zone 2 | | 2 | UNCNX | U1L2X | 29.02 | 108.76 | 35.47 | 72.94 | 10.86 | | | 20.35 | 21.09 | | |
| | | Additional 2-wire ISDN Loop in same DS1Interoffice Transport Combination - Zone 3 | | 3 | UNCNX | U1L2X | 37.95 | 108.76 | 35.47 | 72.94 | 10.86 | | | 20.35 | 21.09 | | |
| | | Additional 2-wire ISDN COCI (BRITE) in same 1/0 channel system combination- per month | | | UNCNX | UC1CA | 3.24 | 5.70 | 4.42 | | | | | | | | |
| | | Each Additional DS1 Interoffice Channel per mile in same 3/1 Channel System per month | | | UNC1X | 1L5XX | 0.3562 | | | | | | | | | | |
| | | Each Additional DS1 Interoffice Channel Facility Termination in same 3/1 Channel System per month | | | UNC1X | U1TF1 | 77.86 | 171.24 | 113.12 | 70.07 | 30.90 | | | 20.35 | 21.09 | | |
| | | Each Additional DS1 COCI in the same 3/1 channel system combination per month | | | UNC1X | UC1D1 | 17.58 | 5.70 | 4.42 | | | | | | | | |
| | | Nonrecurring Currently Combined Network Elements Switch -As-Is Charge | | | UNC1X | UNCCC | | 52.73 | 24.62 | 9.12 | 9.12 | | | 20.35 | 21.09 | | |
| | | EXTENDED 4-WIRE DS1 LOOP WITH DEDICATED DS1 INTEROFFICE TRANSPORT w/ 3/1 MUX | | | | | | | | | | | | | | | |
| | | First 4-wire DS1 Digital Lcoal Loop in Combination - Zone 1 | | 1 | UNC1X | USLXX | 57.73 | 228.40 | 161.74 | 79.87 | 24.88 | | | | | | |
| | | First 4-wire DS1 Digital Lcoal Loop in Combination - Zone 2 | | 2 | UNC1X | USLXX | 75.40 | 228.40 | 161.74 | 79.87 | 24.88 | | | | | | |
| | | First 4-wire DS1 Digital Lcoal Loop in Combination - Zone 3 | | 3 | UNC1X | USLXX | 98.59 | 228.40 | 161.74 | 79.87 | 24.88 | | | | | | |
| | | First Interoffice Transport - Dedicated - DS1 combination - Per Mile Per Month | | | UNC1X | 1L5XX | 0.3562 | | | | | | | | | | |
| | | First Interoffice Transport - Dedicated - DS1 combination - Facility Termination Per Month | | | UNC1X | U1TF1 | 77.86 | 171.24 | 113.12 | 70.07 | 30.90 | | | 20.35 | 21.09 | | |
| | | 3/1 Channel System in combination per month | | | UNC3X | MQ3 | 222.98 | 156.02 | 49.41 | 17.12 | 6.77 | | | 36.84 | 36.84 | | |
| | | Per each DS1 COCI combination per month | | | UNC1X | UC1D1 | 17.58 | 5.70 | 4.42 | | | | | | | | |
| | | Each Additional DS1 Interoffice Channel per mile in same 3/1 Channel System per month | | | UNC1X | 1L5XX | 0.3562 | | | | | | | | | | |

## UNBUNDLED NETWORK ELEMENTS - Tennessee

| CATEGORY | | RATE ELEMENTS | Interim | Zone | BCS | USOC | RATES ($) | | | | | Svc Order Submitted Elec per LSR | Svc Order Submitted Manually per LSR | Attachment: 2 Incremental Charge - Manual Svc Order vs. Electronic-1st | Attachment: 2 Incremental Charge - Manual Svc Order vs. Electronic-Add'l | Exhibit: A Incremental Charge - Manual Svc Order vs. Electronic-Disc 1st | Exhibit: A Incremental Charge - Manual Svc Order vs. Electronic-Disc Add'l |
|---|---|---|---|---|---|---|---|---|---|---|---|---|---|---|---|---|---|
| | | | | | | | Rec | Nonrecurring | | Nonrecurring Disconnect | | OSS Rates ($) | | | | | |
| | | | | | | | | First | Add'l | First | Add'l | SOMEC | SOMAN | SOMAN | SOMAN | SOMAN | SOMAN |
| | | Each Additional DS1 Interoffice Channel Facility Termination in same 3/1 Channel System per month | | | UNC1X | U1TF1 | 77.86 | 171.24 | 113.12 | 70.07 | 30.90 | | | 20.35 | 21.09 | | |
| | | Each Additional DS1 COCI in the same 3/1 channel system combination per month | | | UNC1X | UC1D1 | 17.58 | 5.70 | 4.42 | | | | | | | | |
| | | Additional 4-Wire DS1 Digital Local Loop in Combination - Zone 1 | | 1 | UNC1X | USLXX | 57.73 | 228.40 | 161.74 | 79.87 | 24.88 | | | | | | |
| | | Additional 4-Wire DS1 Digital Local Loop in Combination - Zone 2 | | 2 | UNC1X | USLXX | 75.40 | 228.40 | 161.74 | 79.87 | 24.88 | | | | | | |
| | | Additional 4-Wire DS1 Digital Local Loop in Combination - Zone 3 | | 3 | UNC1X | USLXX | 98.59 | 228.40 | 161.74 | 79.87 | 24.88 | | | | | | |
| | | Nonrecurring Currently Combined Network Elements Switch -As-Is Charge | | | UNC1X | UNCCC | | 52.73 | 24.62 | 9.12 | 9.12 | | | 20.35 | 21.09 | | |
| | **EXTENDED 4-WIRE 56 KBPS DIGITAL EXTENDED LOOP WITH DS0 INTEROFFICE TRANSPORT** | | | | | | | | | | | | | | | | |
| | | First 4-wire 56 kbps Local Loop in combination - Zone 1 | | 1 | UNCDX | UDL56 | 31.10 | 108.76 | 35.47 | 72.94 | 10.86 | | | | | | |
| | | First 4-wire 56 kbps Local Loop in combination - Zone 2 | | 2 | UNCDX | UDL56 | 40.61 | 108.76 | 35.47 | 72.94 | 10.86 | | | | | | |
| | | First 4-wire 56 kbps Local Loop in combination - Zone 3 | | 3 | UNCDX | UDL56 | 53.11 | 108.76 | 35.47 | 72.94 | 10.86 | | | | | | |
| | | First 4-wiree 56 kbps Interoffice Transport - Dedicated - Per Mile per month | | | UNCDX | 1L5XX | 0.0174 | | | | | | | | | | |
| | | First 4-wire 56 kbps Interoffice Transport - Dedicated - Facility Termination per month | | | UNCDX | U1TD5 | 21.19 | 79.83 | 44.08 | 69.32 | 31.00 | | | 20.35 | 21.09 | | |
| | | Nonrecurring Currently Combined Network Elements Switch -As-Is Charge | | | UNCDX | UNCCC | | 52.73 | 24.62 | 9.12 | 9.12 | | | 20.35 | 21.09 | | |
| | **EXTENDED 4-WIRE 64 KBPS DIGITAL EXTENDED LOOP WITH DS0 INTEROFFICE TRANSPORT** | | | | | | | | | | | | | | | | |
| | | First 4-wire 64 kbps Local Loop in combination - Zone 1 | | 1 | UNCDX | UDL64 | 31.10 | 108.76 | 35.47 | 72.94 | 10.86 | | | | | | |
| | | First 4-wire 64 kbps Local Loop in combination - Zone 2 | | 2 | UNCDX | UDL64 | 40.61 | 108.76 | 35.47 | 72.94 | 10.86 | | | | | | |
| | | First 4-wire 64 kbps Local Loop in combination - Zone 3 | | 3 | UNCDX | UDL64 | 53.11 | 108.76 | 35.47 | 72.94 | 10.86 | | | | | | |
| | | First I4-wire 65 kbps Interoffice Transport - Dedicated - Per Mile per month | | | UNCDX | 1L5XX | 0.0174 | | | | | | | | | | |
| | | First 4-wire 64 kbps Interoffice Transport - Dedicated - Facility Termination per month | | | UNCDX | U1TD6 | 21.19 | 79.83 | 44.08 | 69.32 | 31.00 | | | 20.35 | 21.09 | | |
| | | Nonrecurring Currently Combined Network Elements Switch -As-Is Charge | | | UNCDX | UNCCC | | 52.73 | 24.62 | 9.12 | 9.12 | | | 20.35 | 10.54 | | |
| **ADDITIONAL NETWORK ELEMENTS** | | | | | | | | | | | | | | | | | |
| | **When used as a part of a currently combined facility, the non-recurrng charges do not apply, but a Switch As Is charge does apply.** | | | | | | | | | | | | | | | | |
| | **When used as ordinarily combined network elements in All States, the non-recurring charges apply and the Switch As Is Charge does not.** | | | | | | | | | | | | | | | | |
| | **Nonrecurring Currently Combined Network Elements "Switch As Is" Charge (One applies to each combination)** | | | | | | | | | | | | | | | | |
| | | Nonrecurring Currently Combined Network Elements Switch -As-Is Charge - 2 wire/4-Wire VG | | | UNCVX | UNCCC | | 52.73 | 24.62 | 9.12 | 9.12 | | | 53.73 | 24.62 | | |
| | | Nonrecurring Currently Combined Network Elements Switch -As-Is Charge - 56/64 kbps | | | UNCDX | UNCCC | | 52.73 | 24.62 | 9.12 | 9.12 | | | 20.35 | 10.54 | | |
| | | Nonrecurring Currently Combined Network Elements Switch -As-Is Charge - DS1 | | | UNC1X | UNCCC | | 52.73 | 24.62 | 9.12 | 9.12 | | | 53.73 | 24.62 | | |
| | | Nonrecurring Currently Combined Network Elements Switch -As-Is Charge - DS3 | | | UNC3X | UNCCC | | 52.73 | 24.62 | 9.12 | 9.12 | | | 53.73 | 24.62 | | |
| | | Nonrecurring Currently Combined Network Elements Switch -As-Is Charge - STS1 | | | UNCSX | UNCCC | | 52.73 | 24.62 | 9.12 | 9.12 | | | 53.73 | 24.62 | | |
| | **Optional Features & Functions:** | | | | | | | | | | | | | | | | |
| | | Clear Channel Capability Extended Frame Option - per DS1 | I | | U1TD1, ULDD1,UNC1X | CCOEF | | 0I | 0I | 0I | 0I | | | | | | |
| | | Clear Channel Capability Super FrameOption - per DS1 | I | | U1TD1, ULDD1,UNC1X | CCOSF | | 0I | 0I | 0I | 0I | | | | | | |
| | | Clear Channel Capability (SF/ESF) Option - Subsequent Activity - per DS1 | I | | ULDD1, U1TD1, UNC1X, USL | NRCCC | | 185.16S | 23.85S | 2.03S | 0.79S | | | 45.68 | 1.76 | | |
| | | C-bit Parity Option - Subsequent Activity - per DS3 | I | | U1TD3, ULDD3, UE3, UNC3X | NRCC3 | | 219.46S | 7.68S | .7637S | OS | | | 45.68 | 1.76 | | |
| | **MULTIPLEXERS** | | | | | | | | | | | | | | | | |
| | | DS1 to DS0 Channel System per month | | | UNC1X | MQ1 | 80.77 | 105.76 | 14.48 | 3.04 | 2.74 | | | 20.35 | 9.80 | | |
| | | OCU-DP COCI (data) - DS1 to DS0 Channel System - per month (2.4-64kbs) used for a Local Loop | | | UDL | 1D1DD | 1.82 | 6.07 | 4.66 | | | | | | 9.80 | | |

| UNBUNDLED NETWORK ELEMENTS - Tennessee | | | | | | | | | | | | | | Attachment: 2 | | Exhibit: A | |
|---|---|---|---|---|---|---|---|---|---|---|---|---|---|---|---|---|---|
| CATEGORY | | RATE ELEMENTS | Interl m | Zone | BCS | USOC | RATES ($) | | | | | Svc Order Submitted Elec per LSR | Svc Order Submitted Manually per LSR | Incremental Charge - Manual Svc Order vs. Electronic-1st | Incremental Charge - Manual Svc Order vs. Electronic-Add'l | Incremental Charge - Manual Svc Order vs. Electronic-Disc 1st | Incremental Charge - Manual Svc Order vs. Electronic-Disc Add'l |
| | | | | | | | Rec | Nonrecurring | | Nonrecurring Disconnect | | OSS Rates ($) | | | | | |
| | | | | | | | | First | Add'l | First | Add'l | SOMEC | SOMAN | SOMAN | SOMAN | SOMAN | SOMAN |
| | | OCU-DP COCI (data) - DS1 to DS0 Channel System - per month (2.4-64kbs) used for connection to a channelized DS1 Local Channel in the same SWC as collocation | | | U1TUD | 1D1DD | 1.82 | 6.07 | 4.66 | | | | | | | | |
| | | 2-wire ISDN COCI (BRITE) - DS1 to DS0 Channel Systsem - per month for a Local Loop | | | UDN | UC1CA | 3.10 | 6.07 | 4.66 | | | | | | | | |
| | | 2-wire ISDN COCI (BRITE) - DS1 to DS0 Channel Systsem - per month used for connection to a channelized DS1 Local Channel in the same SWC as collocation | | | U1TUB | UC1CA | 3.10 | 6.07 | 4.66 | | | | | | | | |
| | | Voice Grade COCI - DS1 to DS0 Channel System - per month used for a Local Loop | | | UEA | 1D1VG | 0.91 | 6.07 | 4.66 | | | | | | | | |
| | | Voice Grade COCI - DS1 to DS0 Channel System - per month used for connection to a channelized DS1 Local Channel in the same SWC as collocation | | | U1TUC | 1D1VG | 0.91 | 6.07 | 4.66 | | | | | | | | |
| | | DS3 to DS1 Channel System per month | | | UNC3X | MQ3 | 222.98 | 156.02 | 49.41 | 17.12 | 6.77 | | | 20.35 | 9.80 | | |
| | | STS-1 to DS1 Channel System per month | | | UNCSX | MQ3 | 222.98 | 156.02 | 49.41 | 17.12 | 6.77 | | | 20.35 | 9.80 | | |
| | | DS1 COCI used with Loop per month | | | USL | UC1D1 | 17.58 | 6.07 | 4.66 | | | | | | | | |
| | | DS1 COCI (used for connection to a channelized DS1 Local Channel in the same SWC as collocation) per month | | | U1TUA | UC1D1 | 17.58 | 6.07 | 4.66 | | | | | | | | |
| | | DS1 COCI used with Interoffice Channel per month | | | U1TD1 | UC1D1 | 17.58 | 6.07 | 4.66 | | | | | | | | |
| | | DS3 Interface Unit (DS1 COCI) used with Local Channel per month | | | ULDD1 | UC1D1 | 17.58 | 6.07 | 4.66 | | | | | | | | |
| **UNBUNDLED LOCAL EXCHANGE SWITCHING(PORTS)** | | | | | | | | | | | | | | | | | |
| | **Exchange Ports** | | | | | | | | | | | | | | | | |
| | **NOTE: Although the Port Rate includes all available features in GA, KY, LA & TN, the desired features will need to be ordered using retail USOCs** | | | | | | | | | | | | | | | | |
| | **2-WIRE VOICE GRADE LINE PORT RATES (RES)** | | | | | | | | | | | | | | | | |
| | | Exchange Ports - 2-Wire Analog Line Port- Res. | | | UEPSR | UEPRL | 1.89 | 9.93 | 9.19 | 3.66 | 2.92 | | | 20.35 | 10.54 | 13.32 | 1.40 |
| | | Exchange Ports - 2-Wire Analog Line Port with Caller ID - Res. | | | UEPSR | UEPRC | 1.89 | 9.93 | 9.19 | 3.66 | 2.92 | | | 20.35 | 10.54 | 13.32 | 1.40 |
| | | Exchange Ports - 2-Wire Analog Line Port outgoing only - Res. | | | UEPSR | UEPRO | 1.89 | 9.93 | 9.19 | 3.66 | 2.92 | | | 20.35 | 10.54 | 13.32 | 1.40 |
| | | Exchange Ports - 2-Wire VG unbundled TN extended local dialing parity Port with Caller ID - Res. | | | UEPSR | UEPAQ | 1.89 | 9.93 | 9.19 | 3.66 | 2.92 | | | 20.35 | 10.54 | 13.32 | 1.40 |
| | | Exchange Ports - 2-Wire VG unbundled Tennessee Area Plus with Caller ID - Res (AC7) | | | UEPSR | UEPAH | 1.89 | 9.93 | 9.19 | 3.66 | 2.92 | | | 20.35 | 10.54 | 13.32 | 1.40 |
| | | Exchange Ports - 2-Wire VG unbundled Tennessee Area Calling port with Caller ID - Res (F2R) | | | UEPSR | UEPAK | 1.89 | 9.93 | 9.19 | 3.66 | 2.92 | | | 20.35 | 10.54 | 13.32 | 1.40 |
| | | Exchange Ports - 2-Wire VG unbundled Tennessee Area Calling port with Caller ID - Res (TACER) | | | UEPSR | UEPAL | 1.89 | 9.93 | 9.19 | 3.66 | 2.92 | | | 20.35 | 10.54 | 13.32 | 1.40 |
| | | Exchange Ports - 2-Wire VG unbundled Tennessee Area Calling port with Caller ID - Res (TACSR) | | | UEPSR | UEPAM | 1.89 | 9.93 | 9.19 | 3.66 | 2.92 | | | 20.35 | 10.54 | 13.32 | 1.40 |
| | | Exchange Ports - 2-Wire VG unbundled Tennessee Area Calling port with Caller ID - Res (1MF2X) | | | UEPSR | UEPAN | 1.89 | 9.93 | 9.19 | 3.66 | 2.92 | | | 20.35 | 10.54 | 13.32 | 1.40 |
| | | Exchange Ports - 2-Wire VG unbundled Tennessee Area Calling port with Caller ID - Res (2MR) | | | UEPSR | UEPAO | 1.89 | 9.93 | 9.19 | 3.66 | 2.92 | | | 20.35 | 10.54 | 13.32 | 1.40 |
| | | Exchange Ports - 2-Wire VG unbundled res, low usage line port with Caller ID (LUM) | | | UEPSR | UEPAP | 1.89 | 9.93 | 9.19 | 3.66 | 2.92 | | | 20.35 | 10.54 | 13.32 | 1.40 |
| | | Exchange Port - 2-Wire VG Tennessee Residence Dialing Plan without Caller ID | | | UEPSR | UEPWN | 1.89 | 9.93 | 9.19 | 3.66 | 2.92 | | | 20.35 | 10.54 | 13.32 | 1.40 |
| | | Exchange Port - 2-Wire VG Tennessee Residence Area Plus without Caller ID | | | UEPSR | UEPRR | 1.89 | 9.93 | 9.19 | 3.66 | 2.92 | | | 20.35 | 10.54 | 13.32 | 1.40 |
| | | 2-Wire voice unbundled Low Usage Line Port without Caller ID Capability | | | UEPSR | UEPRT | 1.89 | 9.93 | 9.19 | 3.66 | 2.92 | | | 20.35 | 10.54 | 13.32 | 1.40 |
| | | Subsequent Activity | | | UEPSR | USASC | 0.00 | 0.00 | 0.00 | | | | | 20.35 | 10.54 | 13.32 | 1.40 |
| | **FEATURES** | | | | | | | | | | | | | | | | |
| | | All Available Vertical Features | | | UEPSR | UEPVF | 0.00 | 0.00 | 0.00 | | | | | 20.35 | 10.54 | 13.32 | 1.40 |
| | **2-WIRE VOICE GRADE LINE PORT RATES (BUS)** | | | | | | | | | | | | | | | | |
| | | Exchange Ports - 2-Wire Analog Line Port without Caller ID - Bus | | | UEPSB | UEPBL | 1.89 | 9.93 | 9.19 | 3.66 | 2.92 | | | 20.35 | 10.54 | 13.32 | 1.40 |

## UNBUNDLED NETWORK ELEMENTS - Tennessee

| CATEGORY | | RATE ELEMENTS | Interim | Zone | BCS | USOC | RATES ($) | | | | | Svc Order Submitted Elec per LSR | Svc Order Submitted Manually per LSR | Attachment: 2 Incremental Charge - Manual Svc Order vs. Electronic-1st | Attachment: 2 Incremental Charge - Manual Svc Order vs. Electronic-Add'l | Exhibit: A Incremental Charge - Manual Svc Order vs. Electronic-Disc 1st | Exhibit: A Incremental Charge - Manual Svc Order vs. Electronic-Disc Add'l |
|---|---|---|---|---|---|---|---|---|---|---|---|---|---|---|---|---|---|
| | | | | | | | Rec | Nonrecurring | | Nonrecurring Disconnect | | OSS Rates ($) | | | | | |
| | | | | | | | | First | Add'l | First | Add'l | SOMEC | SOMAN | SOMAN | SOMAN | SOMAN | SOMAN |
| | | Exchange Ports - 2-Wire VG unbundled Line Port with unbundled port with Caller+E484 ID - Bus. | | | UEPSB | UEPBC | 1.89 | 9.93 | 9.19 | 3.66 | 2.92 | | | 20.35 | 10.54 | 13.32 | 1.40 |
| | | Exchange Ports - 2-Wire Analog Line Port outgoing only - Bus. | | | UEPSB | UEPBO | 1.89 | 9.93 | 9.19 | 3.66 | 2.92 | | | 20.35 | 10.54 | 13.32 | 1.40 |
| | | Exchange Ports - 2-Wire VG unbundled TN extended local dialing parity Port with Caller ID - Bus. | | | UEPSB | UEPAV | 1.89 | 9.93 | 9.19 | 3.66 | 2.92 | | | 20.35 | 10.54 | 13.32 | 1.40 |
| | | Exhange Ports - 2-Wire VG unbundled incoming only port with Caller ID - Bus | | | UEPSB | UEPB1 | 1.89 | 9.93 | 9.19 | 3.66 | 2.92 | | | 20.35 | 10.54 | 13.32 | 1.40 |
| | | Exchange Ports - 2-Wire VG unbundled TN Bus 2-Way Area Calling Port Economy Option - Bus (TACC1) | | | UEPSB | UEPAC | 1.89 | 9.93 | 9.19 | 3.66 | 2.92 | | | 20.35 | 10.54 | 13.32 | 1.40 |
| | | Exchange Ports - 2-Wire VG unbundled TN Bus 2-Way Area Calling Port Standard Option - Bus (TACC2) | | | UEPSB | UEPAD | 1.89 | 9.93 | 9.19 | 3.66 | 2.92 | | | 20.35 | 10.54 | 13.32 | 1.40 |
| | | Exchange Ports - 2-W VG unbundled TN Bus 2-Way Collierville & Memphis Local Calling Port - Bus (B2F) | | | UEPSB | UEPAE | 1.89 | 9.93 | 9.19 | 3.66 | 2.92 | | | 20.35 | 10.54 | 13.32 | 1.40 |
| | | Exchange Ports - 2-W VG unbundled TN Bus 2-Way Collierville & Memphis Local Calling Port | | | UEPSB | UEPB2 | 1.89 | 9.93 | 9.19 | 3.66 | 2.92 | | | 20.35 | 10.54 | 13.32 | 1.40 |
| | | Exchange Ports - 2-W VG unbundled TN, Business Line Inward, Collierville & Memphis Local Calling Plan | | | UEPSB | UEPB3 | 1.89 | 9.93 | 9.19 | 3.66 | 2.92 | | | 20.35 | 10.54 | 13.32 | 1.40 |
| | | Exchange Ports - 2-Wire Voice Tennessee Business Dialing Plan without Caller ID | | | UEPSB | UEPWO | 1.89 | 9.93 | 9.19 | 3.66 | 2.92 | | | 20.35 | 10.54 | 13.32 | 1.40 |
| | | 2-Wire voice unbundled Incoming Only Port without Caller ID Capability | | | UEPSB | UEPBE | 1.89 | 9.93 | 9.19 | 3.66 | 2.92 | | | 20.35 | 10.54 | 13.32 | 1.40 |
| | | Subsequent Activity | | | UEPSB | USASC | 0.00 | 0.00 | 0.00 | | | | | 20.35 | 10.54 | 13.32 | 1.40 |
| | **FEATURES** | | | | | | | | | | | | | | | | |
| | | All Available Vertical Features | | | UEPSB | UEPVF | 0.00 | 0.00 | 0.00 | | | | | 20.35 | 10.54 | 13.32 | 1.40 |
| | **EXCHANGE PORT RATES (DID & PBX)** | | | | | | | | | | | | | | | | |
| | | 2-Wire VG Unbundled 2-Way PBX Trunk - Res | | | UEPSE | UEPRD | 1.79 | 9.93 | 9.19 | 3.66 | 2.92 | | | 20.35 | 10.54 | 13.32 | 1.40 |
| | | 2-Wire VG Line Side Unbundled 2-Way PBX Trunk - Bus | | | UEPSP | UEPPC | 1.79 | 9.93 | 9.19 | 3.66 | 2.92 | | | 20.35 | 10.54 | 13.32 | 1.40 |
| | | 2-Wire VG Line Side Unbundled Outward PBX Trunk - Bus | | | UEPSP | UEPPO | 1.79 | 9.93 | 9.19 | 3.66 | 2.92 | | | 20.35 | 10.54 | 13.32 | 1.40 |
| | | 2-Wire VG Line Side Unbundled Incoming PBX Trunk - Bus | | | UEPSP | UEPP1 | 1.79 | 9.93 | 9.19 | 3.66 | 2.92 | | | 20.35 | 10.54 | 13.32 | 1.40 |
| | | 2-Wire Analog Long Distance Terminal PBX Trunk - Bus | | | UEPSP | UEPLD | 1.79 | 9.93 | 9.19 | 3.66 | 2.92 | | | 20.35 | 10.54 | 13.32 | 1.40 |
| | | 2-Wire Analog TN 2-Way Calling Plan PBX Trunk - Bus | | | UEPSP | UEPT2 | 1.79 | 9.93 | 9.19 | 3.66 | 2.92 | | | 20.35 | 10.54 | 13.32 | 1.40 |
| | | 2-Wire TN Outward Calling Plan PBX Trunk - Bus | | | UEPSP | UEPTO | 1.79 | 9.93 | 9.19 | 3.66 | 2.92 | | | 20.35 | 10.54 | 13.32 | 1.40 |
| | | 2-Wire Voice Unbundled PBX LD Terminal Ports | | | UEPSP | UEPLD | 1.79 | 9.93 | 9.19 | 3.66 | 2.92 | | | 20.35 | 10.54 | 13.32 | 1.40 |
| | | 2-Wire Voice Unbundled 2-Way PBX Tennessee Calling Port | | | UEPSP | UEPT2 | 1.79 | 9.93 | 9.19 | 3.66 | 2.92 | | | 20.35 | 10.54 | 13.32 | 1.40 |
| | | 2-Wire Voice Unbundled 1-Way Outgoing PBX Tennessee Calling Port | | | UEPSP | UEPTO | 1.79 | 9.93 | 9.19 | 3.66 | 2.92 | | | 20.35 | 10.54 | 13.32 | 1.40 |
| | | 2-Wire Vice Unbundled 2-Way PBX Usage Port | | | UEPSP | UEPXA | 1.79 | 9.93 | 9.19 | 3.66 | 2.92 | | | 20.35 | 10.54 | 13.32 | 1.40 |
| | | 2-Wire Voice Unbundled PBX Toll Terminal Hotel Ports | | | UEPSP | UEPXB | 1.79 | 9.93 | 9.19 | 3.66 | 2.92 | | | 20.35 | 10.54 | 13.32 | 1.40 |
| | | 2-Wire Voice Unbundled PBX LD DDD Terminals Port | | | UEPSP | UEPXC | 1.79 | 9.93 | 9.19 | 3.66 | 2.92 | | | 20.35 | 10.54 | 13.32 | 1.40 |
| | | 2-Wire Voice Unbundled PBX LD Terminal Switchboard Port | | | UEPSP | UEPXD | 1.79 | 9.93 | 9.19 | 3.66 | 2.92 | | | 20.35 | 10.54 | 13.32 | 1.40 |
| | | 2-Wire Voice Unbundled PBX LD Terminal Switchboard IDD Capable Port | | | UEPSP | UEPXE | 1.79 | 9.93 | 9.19 | 3.66 | 2.92 | | | 20.35 | 10.54 | 13.32 | 1.40 |
| | | 2-Wire Voice Unbundled 2-Way PBX Hotel/Hospital Economy Administrative Calling Port | | | UEPSP | UEPXL | 1.79 | 9.93 | 9.19 | 3.66 | 2.92 | | | 20.35 | 10.54 | 13.32 | 1.40 |
| | | 2-Wire Voice Unbundled 2-Way PBX Hotel/Hospital Economy Room Calling Port | | | UEPSP | UEPXM | 1.79 | 9.93 | 9.19 | 3.66 | 2.92 | | | 20.35 | 10.54 | 13.32 | 1.40 |
| | | 2-W Voice Unbundled 1-Way Out PBX Hotel/Hospital Economy Administrative Calling Port TN Calling Port | | | UEPSP | UEPXN | 1.79 | 9.93 | 9.19 | 3.66 | 2.92 | | | 20.35 | 10.54 | 13.32 | 1.40 |
| | | 2-Wire Voice Unbundled 1-Way Outgoing PBX Hotel/Hospital Discount Room Calling Port | | | UEPSP | UEPXO | 1.79 | 9.93 | 9.19 | 3.66 | 2.92 | | | 20.35 | 10.54 | 13.32 | 1.40 |
| | | Unbundled Exchange Ports, PBX Trunk Combination, Collierville and Memphis Local Calling Plan | | | UEPSP | UEPA6 | 1.79 | 9.93 | 9.19 | 3.66 | 2.92 | | | 20.35 | 10.54 | 13.32 | 1.40 |
| | | Unbundled Exchange Ports, PBX Trunk Combination, first trunk, Collierville and Memphis Local Calling Plan | | | UEPSP | UEPA7 | 1.79 | 9.93 | 9.19 | 3.66 | 2.92 | | | 20.35 | 10.54 | 13.32 | 1.40 |
| | | 2-Wire Voice Unbundled 1-Way Outgoing PBX Measured Port | | | UEPSP | UEPXS | 1.79 | 9.93 | 9.19 | 3.66 | 2.92 | | | 20.35 | 10.54 | 13.32 | 1.40 |
| | | 2-Wire Voice Unbundled PBX Collierville and Memphis Calling Port | | | UEPSP | UEPXU | 1.79 | 9.93 | 9.19 | 3.66 | 2.92 | | | 20.35 | 10.54 | 13.32 | 1.40 |

| UNBUNDLED NETWORK ELEMENTS - Tennessee | | | | | | | | | | | | | | Attachment: 2 | | Exhibit: A | |
|---|---|---|---|---|---|---|---|---|---|---|---|---|---|---|---|---|---|
| CATEGORY | RATE ELEMENTS | Interim | Zone | BCS | USOC | RATES ($) | | | | | Svc Order Submitted Elec per LSR | Svc Order Submitted Manually per LSR | Incremental Charge - Manual Svc Order vs. Electronic-1st | Incremental Charge - Manual Svc Order vs. Electronic-Add'l | Incremental Charge - Manual Svc Order vs. Electronic-Disc 1st | Incremental Charge - Manual Svc Order vs. Electronic-Disc Add'l |
| | | | | | | Rec | Nonrecurring | | Nonrecurring Disconnect | | OSS Rates ($) | | | | | |
| | | | | | | | First | Add'l | First | Add'l | SOMEC | SOMAN | SOMAN | SOMAN | SOMAN | SOMAN |
| | 2-Wire Voice Unbundled 2-Way PBX Tennessee RegionServ Calling Port | | | UEPSP | UEPXV | 1.79 | 9.93 | 9.19 | 3.66 | 2.92 | | | 20.35 | 10.54 | 13.32 | 1.40 |
| | Subsequent Activity | | | UEPSP | USASC | 0.00 | 0.00 | 0.00 | | | | | 20.35 | 10.54 | 13.32 | 1.40 |
| FEATURES | | | | | | | | | | | | | | | | |
| | All Available Vertical Features | | | UEPSP UEPSE | UEPVF | 0.00 | 0.00 | 0.00 | | | | | 20.35 | 10.54 | 13.32 | 1.40 |
| EXCHANGE PORT RATES (COIN) | | | | | | | | | | | | | | | | |
| | Exchange Ports - Coin Port | | | | | 2.11 | 9.93 | 9.19 | 3.66 | 2.92 | | | 20.35 | 10.54 | 13.32 | 1.40 |
| NOTE: Transmission/usage charges associated with POTS circuit switched usage will also apply to circuit switched voice and/or circuit switched data transmission by B-Channels associated with 2-wire ISDN ports. | | | | | | | | | | | | | | | | |
| NOTE: Access to B Channel or D Channel Packet capabilities will be available only through BFR/New Business Request Process. Rates for the packet capabilities will be determined via the Bona Fide Request/New Business Request Process. | | | | | | | | | | | | | | | | |
| UNBUNDLED LOCAL EXCHANGE SWITCHING(PORTS) | | | | | | | | | | | | | | | | |
| EXCHANGE PORT RATES | | | | | | | | | | | | | | | | |
| The DS1 Port rates below for 4-Wire DDITS Trunk Port and 4-Wire ISDN Port in this rate exhibit apply to the embedded base in place as of 10/2/03 until 4/1/04. After 4/1/04 these rates shall revert to tariff rates or a separate agreement. | | | | | | | | | | | | | | | | |
| Requests for 4-Wire DDITS Trunk Ports with 4-Wire ISDN DS1 Ports after the effective date of this amendment shall be provided pursuant to a separate agreement or tariff at BellSouth's discretion. | | | | | | | | | | | | | | | | |
| | Exchange Ports - 2-Wire DID Port | | | UEPEX | UEPP2 | 8.97 | 47.75 | 47.01 | 9.21 | 8.47 | | | 20.35 | 10.54 | 13.32 | 1.40 |
| | Exchange Ports - DDITS Port - 4-Wire DS1 Port with DID capability (E:4/1/2004) | | | UEPDD | UEPDD | 35.74 | 75.93 | 38.15 | 8.77 | 8.04 | | | 20.35 | 10.54 | 13.32 | 1.40 |
| | Exchange Ports - 2-Wire ISDN Port (See Notes below.) | | | UEPTX, UEPSX | U1PMA | 16.26 | 30.23 | 29.49 | 4.10 | 4.10 | | | 20.35 | 10.54 | 13.32 | 1.40 |
| | All Features Offered | | | UEPTX, UEPSX | UEPVF | 0.00 | 0.00 | 0.00 | | | | | | | | |
| | Exchange Ports - 2-Wire ISDN Port -- Channel Profiles | | | UEPTX, UEPSX | U1UMA | 0.00 | 0.00 | 0.00 | | | | | | | | |
| NOTE: Transmission/usage charges associated with POTS circuit switched usage will also apply to circuit switched voice and/or circuit switched data transmission by B-Channels associated with 2-wire ISDN ports. | | | | | | | | | | | | | | | | |
| NOTE: Access to B Channel or D Channel Packet capabilities will be available only through BFR/New Business Request Process. Rates for the packet capabilities will be determined via the Bona Fide Request/New Business Request Process. | | | | | | | | | | | | | | | | |
| EXCHANGE PORT RATES (continued) | | | | | | | | | | | | | | | | |
| | Exchange Ports - 4-Wire ISDN DS1 Port with Detailed E911 Locator Capability (E:4/1/2004) | | | UEPEX | UEPEX | 75.04 | 148.66 | 147.18 | 38.46 | 36.98 | | | 20.35 | 10.54 | 13.32 | 1.40 |
| | Exchange Ports - 4-Wire ISDN DS1 Port (E:4/1/2004) | | | UEPDX | UEPDX | 75.04 | 148.66 | 147.18 | 38.46 | 36.98 | | | 20.35 | 10.54 | | |
| | Physical Collocation - DS1 Cross-Connects | | | UEPEX UEPDX | PE1P1 | 1.51 | 53.27 | 40.16 | | | | | | | | |
| | Virtual collocation - Special Access & UNE, cross-connect per DS1 | | | UEPEX UEPDX | CNC1X | 1.32 | 32.22 | 17.76 | 10.46 | 8.75 | | | | | | |
| Detailed E911 with Locator Capability (required with UEPEX port) | | | | | | | | | | | | | | | | |
| | Unbundled Exchange Ports, 4-Wire ISDN DS1 Port - E911 Locator Capability - Initial Profile Establishment per CLEC per State | | | UEPEX | UEP1A | 0.00 | 1,699.00 | | 147.00 | | | | 20.35 | 10.54 | | |
| | Unbundled Exchange Ports, 4-Wire ISDN DS1 Port - E911 Locator Capability - Subsequent Profile Changes, Additions, Deletions | | | UEPEX | UEP1B | 0.00 | 164.94 | | | | | | 20.35 | 10.54 | | |
| New or Additional PRI Telephone Numbers | | | | | | | | | | | | | | | | |
| | Unbundled Exchange Ports, 4-Wire ISDN DS1 Port - E911 Locator Capability 2-way Telephone Numbers, per number in E911 profile [New or Additional] | | | UEPEX | UEP1C | 0.0755 | 0.94 | | | | | | 20.35 | 10.54 | | |
| | Unbundled Exchange Ports, 4-Wire ISDN DS1 Port - E911 Locator Capability - Outdial Telephone Numbers, per number in E911 profile [New or Additional] | | | UEPEX | UEP1D | 0.0755 | 22.36 | 22.36 | | | | | 20.35 | 10.54 | | |
| | Unbundled Exchange Ports, 4-Wire ISDN DS1 Port - Inward Telephone Numbers - Inward Data Only Option [New or Additional] | | | UEPDX | UEP1E | 0.00 | 0.94 | | | | | | 20.35 | 10.54 | | |
| | Exchange Ports - 4-Wire ISDN DS1 Port - Subsequent [New] Inward Tel Numbers [Customer Testing Purposes] | | | UEPEX | PR7ZT | 0.00 | 44.71 | 44.70 | | | | | 20.35 | 10.54 | | |
| LOCAL NUMBER PORTABILITY | | | | | | | | | | | | | | | | |
| | Local Number Portability (1 per port) | | | UEPEX UEPDX | LNPCN | 1.75 | | | | | | | 20.35 | 10.54 | | |
| INTERFACE (Provsioning Only) | | | | | | | | | | | | | | | | |
| | Voice/Data | | | UEPEX | PR71V | 0.00 | 0.00 | 0.00 | | | | | 20.35 | 10.54 | | |
| | Digital Data | | | UEPEX | PR71D | 0.00 | 0.00 | 0.00 | | | | | 20.35 | 10.54 | | |
| | Inward Data | | | UEPDX | PR71E | 0.00 | 0.00 | 0.00 | | | | | 20.35 | 10.54 | | |
| New or Additional Channel | | | | | | | | | | | | | | | | |
| | New or Additional - Voice/Data "B" Channel | | | UEPEX | PR7BV | 0.00 | 28.39 | | | | | | 20.35 | 10.54 | | |
| | New or Additional - Digital Data "B" Channel | | | UEPEX | PR7BF | 0.00 | 29.11 | | | | | | 20.35 | 10.54 | | |
| | New or Additional Inward Data "B" Channel | | | UEPDX | PR7BD | 0.00 | 29.39 | | | | | | 20.35 | 10.54 | | |
| | New or Additional Useage Sensitive Voice Data "B" Channel | | | UEPEX | PR7BS | 0.00 | 29.39 | | | | | | 20.35 | 10.54 | | |
| | New or Additional Useage Sensitive Digital Data "B" Channel | | | UEPEX | PR7BU | 0.00 | 29.39 | | | | | | 20.35 | 10.54 | | |

| UNBUNDLED NETWORK ELEMENTS - Tennessee | | | | | | | | | | | | | | Attachment: 2 | | Exhibit: A | |
|---|---|---|---|---|---|---|---|---|---|---|---|---|---|---|---|---|---|
| CATEGORY | RATE ELEMENTS | Interim | Zone | BCS | USOC | RATES ($) | | | | | Svc Order Submitted Elec per LSR | Svc Order Submitted Manually per LSR | Incremental Charge - Manual Svc Order vs. Electronic-1st | Incremental Charge - Manual Svc Order vs. Electronic-Add'l | Incremental Charge - Manual Svc Order vs. Electronic-Disc 1st | Incremental Charge - Manual Svc Order vs. Electronic-Disc Add'l |
| | | | | | | Rec | Nonrecurring | | Nonrecurring Disconnect | | OSS Rates ($) | | | | | |
| | | | | | | | First | Add'l | First | Add'l | SOMEC | SOMAN | SOMAN | SOMAN | SOMAN | SOMAN |
| | New or Additional PRI "D" Channel | | | UEPEX | PR7EX | 0.00 | 29.39 | | | | | | 20.35 | 10.54 | | |
| CALL TYPES | | | | | | | | | | | | | | | | |
| | Inward | | | UEPEX UEPDX | PR7C1 | 0.00 | 0.00 | 0.00 | | | | | | | | |
| | Outward | | | UEPEX | PR7CO | 0.00 | 0.00 | 0.00 | | | | | | | | |
| | Two-way | | | UEPEX | PR7CC | 0.00 | 0.00 | 0.00 | | | | | | | | |
| UNBUNDLED PORT with REMOTE CALL FORWARDING CAPABILITY | | | | | | | | | | | | | | | | |
| UNBUNDLED REMOTE CALL FORWARDING SERVICE - RESIDENCE | | | | | | | | | | | | | | | | |
| | Unbundled Remote Call Forwarding Service, Area Calling, Res | | | UEPVR | UERAC | 1.89 | 9.93 | 9.19 | 3.66 | 2.92 | | | 20.35 | 10.54 | 13.32 | 1.40 |
| | Unbundled Remote Call Forwarding Service, Local Calling - Res | | | UEPVR | UERLC | 1.89 | 9.93 | 9.19 | 3.66 | 2.92 | | | 20.35 | 10.54 | 13.32 | 1.40 |
| | Unbundled Remote Call Forwarding Service, InterLATA - Res | | | UEPVR | UERTE | 1.89 | 9.93 | 9.19 | 3.66 | 2.92 | | | 20.35 | 10.54 | 13.32 | 1.40 |
| | Unbundled Remote Call Forwarding Service, IntraLATA - Res | | | UEPVR | UERTR | 1.89 | 9.93 | 9.19 | 3.66 | 2.92 | | | 20.35 | 10.54 | 13.32 | 1.40 |
| Non-Recurring | | | | | | | | | | | | | | | | |
| | Unbundled Remote Call Forwarding Service - Conversion - Switch-as-is | | | UEPVR | USAC2 | | 1.03 | 0.29 | | | | | 20.35 | 10.54 | 13.32 | 1.40 |
| | Unbundled Remote Call Forwarding Service - Conversion with allowed change (PIC and LPIC) | | | UEPVR | USACC | | 1.03 | 0.29 | | | | | | | | |
| UNBUNDLED REMOTE CALL FORWARDING - Bus | | | | | | | | | | | | | | | | |
| | Unbundled Remote Call Forwarding Service, Area Calling - Bus | | | UEPVB | UERAC | 1.89 | 9.93 | 9.19 | 3.66 | 2.92 | | | 20.35 | 10.54 | 13.32 | 1.40 |
| | Unbundled Remote Call Forwarding Service, Local Calling - Bus | | | UEPVB | UERLC | 1.89 | 9.93 | 9.19 | 3.66 | 2.92 | | | 20.35 | 10.54 | 13.32 | 1.40 |
| | Unbundled Remote Call Forwarding Service, InterLATA - Bus | | | UEPVB | UERTE | 1.89 | 9.93 | 9.19 | 3.66 | 2.92 | | | 20.35 | 10.54 | 13.32 | 1.40 |
| | Unbundled Remote Call Forwarding Service, IntraLATA - Bus | | | UEPVB | UERTR | 1.89 | 9.93 | 9.19 | 3.66 | 2.92 | | | 20.35 | 10.54 | 13.32 | 1.40 |
| | Unbundled Remote Call Forwarding Service Expanded and Exception Local Calling | | | UEPVB | UERVJ | 1.89 | 9.93 | 9.19 | 3.66 | 2.92 | | | 20.35 | 10.54 | 13.32 | 1.40 |
| Non-Recurring | | | | | | | | | | | | | | | | |
| | Unbundled Remote Call Forwarding Service - Conversion - Switch-as-is | | | UEPVB | USAC2 | | 1.03 | 0.29 | | | | | 20.35 | 10.54 | 13.32 | 1.40 |
| | Unbundled Remote Call Forwarding Service - Conversion with allowed change (PIC and LPIC) | | | UEPVB | USACC | | 1.03 | 0.29 | | | | | | | | |
| UNBUNDLED LOCAL SWITCHING, PORT USAGE | | | | | | | | | | | | | | | | |
| End Office Switching (Port Usage) | | | | | | | | | | | | | | | | |
| | End Office Switching Function, Per MOU | | | | | 0.0008041 | | | | | | | | | | |
| Tandem Switching (Port Usage) (Local or Access Tandem) | | | | | | | | | | | | | | | | |
| | Tandem Switching Function Per MOU | | | | | 0.0009778 | | | | | | | | | | |
| | Tandem Switching Function Per MOU (Melded) | | | | | 0.000380364 | | | | | | | | | | |
| | Melded Factor: 38.90% of the Tandem Rate | | | | | | | | | | | | | | | |
| Common Transport | | | | | | | | | | | | | | | | |
| | Common Transport - Per Mile, Per MOU | | | | | 0.0000064 | | | | | | | | | | |
| | Common Transport - Facilities Termination Per MOU | | | | | 0.0003871 | | | | | | | | | | |
| UNBUNDLED PORT/LOOP COMBINATIONS - COST BASED RATES | | | | | | | | | | | | | | | | |
| Cost Based Rates are applied where BellSouth is required by FCC and/or State Commission rule to provide Unbundled Local Switching or Switch Ports. | | | | | | | | | | | | | | | | |
| Features shall apply to the Unbundled Port/Loop Combination - Cost Based Rate section in the same manner as they are applied to the Stand-Alone Unbundled Port section of this Rate Exhibit. | | | | | | | | | | | | | | | | |
| End Office and Tandem Switching Usage and Common Transport Usage rates in the Port section of this rate exhibit shall apply to all combinations of loop/port network elements except for UNE Coin Port/Loop Combinations. | | | | | | | | | | | | | | | | |
| The first and additional Port nonrecurring charges apply to Not Currently Combined Combos. For Currently Combined Combos the nonrecurring charges shall be those identified in the Nonrecurring - Currently Combined sections. | | | | | | | | | | | | | | | | |
| 2-WIRE VOICE GRADE LOOP WITH 2-WIRE LINE PORT (RES) | | | | | | | | | | | | | | | | |
| UNE Port/Loop Combination Rates | | | | | | | | | | | | | | | | |
| | 2-Wire VG Loop/Port Combo - Zone 1 | | 1 | | | 14.18 | | | | | | | | | | |
| | 2-Wire VG Loop/Port Combo - Zone 2 | | 2 | | | 18.01 | | | | | | | | | | |
| | 2-Wire VG Loop/Port Combo - Zone 3 | | 3 | | | 23.02 | | | | | | | | | | |
| UNE Loop Rates | | | | | | | | | | | | | | | | |
| | 2-Wire Voice Grade Loop (SL1) - Zone 1 | | 1 | UEPRX | UEPLX | 12.48 | | | | | | | | | | |
| | 2-Wire Voice Grade Loop (SL1) - Zone 2 | | 2 | UEPRX | UEPLX | 16.31 | | | | | | | | | | |
| | 2-Wire Voice Grade Loop (SL1) - Zone 3 | | 3 | UEPRX | UEPLX | 21.32 | | | | | | | | | | |
| 2-Wire Voice Grade Line Port Rates (Res) | | | | | | | | | | | | | | | | |
| | 2-Wire voice unbundled port - residence | | | UEPRX | UEPRL | 1.70 | 22.14 | 15.25 | 8.45 | 3.91 | | 15.69 | | | | |
| | 2-Wire voice unbundled port with Caller ID - res | | | UEPRX | UEPRC | 1.70 | 22.14 | 15.25 | 8.45 | 3.91 | | 15.69 | | | | |
| | 2-Wire voice unbundled port outgoing only - res | | | UEPRX | UEPRO | 1.70 | 22.14 | 15.25 | 8.45 | 3.91 | | 15.69 | | | | |

## UNBUNDLED NETWORK ELEMENTS - Tennessee

| CATEGORY | RATE ELEMENTS | Interim | Zone | BCS | USOC | RATES ($) | | | | | Svc Order Submitted Elec per LSR | Svc Order Submitted Manually per LSR | Attachment: 2 | | Exhibit: A | |
|---|---|---|---|---|---|---|---|---|---|---|---|---|---|---|---|---|
| | | | | | | | | | | | | | Incremental Charge - Manual Svc Order vs. Electronic-1st | Incremental Charge - Manual Svc Order vs. Electronic-Add'l | Incremental Charge - Manual Svc Order vs. Electronic-Disc 1st | Incremental Charge - Manual Svc Order vs. Electronic-Disc Add'l |
| | | | | | | Rec | Nonrecurring | | Nonrecurring Disconnect | | OSS Rates ($) | | | | | |
| | | | | | | | First | Add'l | First | Add'l | SOMEC | SOMAN | SOMAN | SOMAN | SOMAN | SOMAN |
| | 2-Wire voice Grade unbundled Tennessee extended local dialing parity port with Caller ID - res | | | UEPRX | UEPAQ | 1.70 | 22.14 | 15.25 | 8.45 | 3.91 | | 15.69 | | | | |
| | 2-Wire voice unbundled Tennessee Area Plus with Caller ID - res (AC7) | | | UEPRX | UEPAH | 1.70 | 22.14 | 15.25 | 8.45 | 3.91 | | 15.69 | | | | |
| | 2-Wire voice unbundled Tennessee Area Calling port with Caller ID - res (F2R) | | | UEPRX | UEPAK | 1.70 | 22.14 | 15.25 | 8.45 | 3.91 | | 15.69 | | | | |
| | 2-Wire voice unbundled Tennessee Area Calling port with Caller ID - res (TACER) | | | UEPRX | UEPAL | 1.70 | 22.14 | 15.25 | 8.45 | 3.91 | | 15.69 | | | | |
| | 2-Wire voice unbundled Tennessee Area Calling port with Caller ID - res (TACSR) | | | UEPRX | UEPAM | 1.70 | 22.14 | 15.25 | 8.45 | 3.91 | | 15.69 | | | | |
| | 2-Wire voice unbundled Tennessee Area Calling port with Caller ID - res (1MF2X) | | | UEPRX | UEPAN | 1.70 | 22.14 | 15.25 | 8.45 | 3.91 | | 15.69 | | | | |
| | 2-Wire voice unbundled Tennessee Area Calling port with Caller ID - res (2MR) | | | UEPRX | UEPAO | 1.70 | 22.14 | 15.25 | 8.45 | 3.91 | | 15.69 | | | | |
| | 2-Wire voice unbundles res, low usage line port with Caller ID (LUM) | | | UEPRX | UEPAP | 1.70 | 22.14 | 15.25 | 8.45 | 3.91 | | 15.69 | | | | |
| | 2-Wire Voice Unbundled Tennessee Residence Dialing Plan without Caller ID | | | UEPRX | UEPWN | 1.70 | 22.14 | 15.25 | 8.45 | 3.91 | | 15.69 | | | | |
| | 2-Wire voice unbundled Tennessee Area Plus Port without Caller ID Capability | | | UEPRX | UEPRR | 1.70 | 22.14 | 15.25 | 8.45 | 3.91 | | 15.69 | | | | |
| | 2-Wire voice unbundled Low Usage Line Port without Caller ID Capability | | | UEPRX | UEPRT | 1.70 | 22.14 | 15.25 | 8.45 | 3.91 | | 15.69 | | | | |
| **FEATURES** | | | | | | | | | | | | | | | | |
| | All Features Offered | | | UEPRX | UEPVF | 0.00 | 0.00 | 0.00 | | | | 15.69 | | | | |
| **LOCAL NUMBER PORTABILITY** | | | | | | | | | | | | | | | | |
| | Local Number Portability (1 per port) | | | UEPRX | LNPCX | 0.35 | | | | | | | | | | |
| **NONRECURRING CHARGES (NRCs) - CURRENTLY COMBINED** | | | | | | | | | | | | | | | | |
| | 2-Wire Voice Grade Loop / Line Port Combination - Conversion - Switch-as-is | | | UEPRX | USAC2 | | 1.03 | 0.29 | | | | 15.69 | | | | |
| | 2-Wire Voice Grade Loop / Line Port Combination - Conversion - Switch with change | | | UEPRX | USACC | | 1.03 | 0.29 | | | | 15.69 | | | | |
| | 2-Wire Voice Grade Loop / Line Port Combination - Conversion - Subsequent Database Update | | | | | | 0.76 | | | | | 15.69 | | | | |
| **ADDITIONAL NRCs** | | | | | | | | | | | | | | | | |
| | 2-Wire Voice Grade Loop/Line Port Combination - Subsequent Activity | | | UEPRX | USAS2 | 0.00 | 0.00 | 0.00 | | | | 15.69 | | | | |
| | Unbundled Miscellaneous Rate Element, Tag Loop at End User Premise | | | UEPRX | URETL | | 8.33 | 0.83 | | | | | 20.35 | 10.54 | 13.32 | 13.32 |
| **OFF/ON PREMISES EXTENSION CHANNELS** | | | | | | | | | | | | | | | | |
| | 2 Wire Analog Voice Grade Extension Loop – Non-Design | | 1 | UEPRX | UEAEN | 13.19 | 31.99 | 20.02 | 10.65 | 1.41 | | | 20.35 | 10.54 | 13.32 | 13.32 |
| | 2 Wire Analog Voice Grade Extension Loop – Non-Design | | 2 | UEPRX | UEAEN | 17.23 | 31.99 | 20.02 | 10.65 | 1.41 | | | 20.35 | 10.54 | 13.32 | 13.32 |
| | 2 Wire Analog Voice Grade Extension Loop – Non-Design | | 3 | UEPRX | UEAEN | 22.53 | 31.99 | 20.02 | 10.65 | 1.41 | | | 20.35 | 10.54 | 13.32 | 13.32 |
| | 2 Wire Analog Voice Grade Extension Loop – Design | | 1 | UEPRX | UEAED | 16.56 | 75.06 | 48.20 | 28.70 | 17.64 | | | 20.35 | 10.54 | 13.32 | 13.32 |
| | 2 Wire Analog Voice Grade Extension Loop – Design | | 2 | UEPRX | UEAED | 21.63 | 75.06 | 48.20 | 28.70 | 17.64 | | | 20.35 | 10.54 | 13.32 | 13.32 |
| | 2 Wire Analog Voice Grade Extension Loop – Design | | 3 | UEPRX | UEAED | 28.28 | 75.06 | 48.20 | 28.70 | 17.64 | | | 20.35 | 10.54 | 13.32 | 13.32 |
| **INTEROFFICE TRANSPORT** | | | | | | | | | | | | | | | | |
| | Interoffice Transport - Dedicated - 2 Wire Voice Grade - Facility Termination | | | UEPRX | U1TV2 | 18.58 | 55.39 | 17.37 | 27.96 | 3.51 | | | | | | |
| | Interoffice Transport - Dedicated - 2 Wire Voice Grade - Per Mile or Fraction Mile | | | UEPRX | U1TVM | 0.0174 | 0.00 | 0.00 | | | | | | | | |
| **2-WIRE VOICE GRADE LOOP WITH 2-WIRE LINE PORT (BUS)** | | | | | | | | | | | | | | | | |
| **UNE Port/Loop Combination Rates** | | | | | | | | | | | | | | | | |
| | 2-Wire VG Loop/Port Combo - Zone 1 | | 1 | | | 14.18 | | | | | | | | | | |
| | 2-Wire VG Loop/Port Combo - Zone 2 | | 2 | | | 18.01 | | | | | | | | | | |
| | 2-Wire VG Loop/Port Combo - Zone 3 | | 3 | | | 23.02 | | | | | | | | | | |
| **UNE Loop Rates** | | | | | | | | | | | | | | | | |
| | 2-Wire Voice Grade Loop (SL1) - Zone 1 | | 1 | UEPBX | UEPLX | 12.48 | | | | | | | | | | |
| | 2-Wire Voice Grade Loop (SL1) - Zone 2 | | 2 | UEPBX | UEPLX | 16.31 | | | | | | | | | | |
| | 2-Wire Voice Grade Loop (SL1) - Zone 3 | | 3 | UEPBX | UEPLX | 21.32 | | | | | | | | | | |

| UNBUNDLED NETWORK ELEMENTS - Tennessee | | | | | | | | | | | | | | Attachment: 2 | | Exhibit: A | |
|---|---|---|---|---|---|---|---|---|---|---|---|---|---|---|---|---|---|
| CATEGORY | RATE ELEMENTS | Interim | Zone | BCS | USOC | RATES ($) | | | | | Svc Order Submitted Elec per LSR | Svc Order Submitted Manually per LSR | Incremental Charge - Manual Svc Order vs. Electronic-1st | Incremental Charge - Manual Svc Order vs. Electronic-Add'l | Incremental Charge - Manual Svc Order vs. Electronic-Disc 1st | Incremental Charge - Manual Svc Order vs. Electronic-Disc Add'l |
| | | | | | | Rec | Nonrecurring | | Nonrecurring Disconnect | | OSS Rates ($) | | | | | |
| | | | | | | | First | Add'l | First | Add'l | SOMEC | SOMAN | SOMAN | SOMAN | SOMAN | SOMAN |
| 2-Wire Voice Grade Line Port (Bus) | | | | | | | | | | | | | | | | |
| | 2-Wire voice unbundled port without Caller ID - bus | | | UEPBX | UEPBL | 1.70 | 22.14 | 15.25 | 8.45 | 3.91 | | 15.69 | | | | |
| | 2-Wire voice unbundled port with Caller + E484 ID - bus | | | UEPBX | UEPBC | 1.70 | 22.14 | 15.25 | 8.45 | 3.91 | | 15.69 | | | | |
| | 2-Wire voice unbundled port outgoing only - bus | | | UEPBX | UEPBO | 1.70 | 22.14 | 15.25 | 8.45 | 3.91 | | 15.69 | | | | |
| | 2-Wire voice Grade unbundled Tennessee extended local dialing parity port with Caller ID - bus | | | UEPBX | UEPAV | 1.70 | 22.14 | 15.25 | 8.45 | 3.91 | | 15.69 | | | | |
| | 2-Wire voice unbundled incoming only port with Caller ID - Bus | | | UEPBX | UEPB1 | 1.70 | 22.14 | 15.25 | 8.45 | 3.91 | | 15.69 | | | | |
| | 2-Wire voice unbundled Tennessee Bus 2-Way Area Calling Port Economy Option (TACC1) | | | UEPBX | UEPAC | 1.70 | 22.14 | 15.25 | 8.45 | 3.91 | | 15.69 | | | | |
| | 2-Wire voice unbundled Tennessee Bus 2-Way Area Calling Port Standard Option (TACC2) | | | UEPBX | UEPAD | 1.70 | 22.14 | 15.25 | 8.45 | 3.91 | | 15.69 | | | | |
| | 2-Wire voice unbundled Tennessee Bus 2-Way Collierville and Memphis Local Calling Port (B2F) | | | UEPBX | UEPAE | 1.70 | 22.14 | 15.25 | 8.45 | 3.91 | | 15.69 | | | | |
| | 2-Wire Voice Unbundled Tennessee Business Dialing Plan without Caller ID | | | UEPBX | UEPWO | 1.70 | 22.14 | 15.25 | 8.45 | 3.91 | | 15.69 | | | | |
| | Tennessee Inward Collierville and Memphis Local Calling Plan (BUS) | | | UEPBX | UEPB2 | 1.70 | 22.14 | 15.25 | 8.45 | 3.91 | | 15.69 | | | | |
| | Tennessee 2-Way Collierville and Memphis Local Calling Plan (BUS) | | | UEPBX | UEPB3 | 1.70 | 22.14 | 15.25 | 8.45 | 3.91 | | 15.69 | | | | |
| | 2-Wire voice unbundled Incoming Only Port without Caller ID Capability | | | UEPBX | UEPBE | 1.70 | 22.14 | 15.25 | 8.45 | 3.91 | | 15.69 | | | | |
| LOCAL NUMBER PORTABILITY | | | | | | | | | | | | | | | | |
| | Local Number Portability (1 per port) | | | UEPBX | LNPCX | 0.35 | | | | | | | | | | |
| FEATURES | | | | | | | | | | | | | | | | |
| | All Features Offered | | | UEPBX | UEPVF | 0.00 | 0.00 | 0.00 | | | | 15.69 | | | | |
| NONRECURRING CHARGES (NRCs) - CURRENTLY COMBINED | | | | | | | | | | | | | | | | |
| | 2-Wire Voice Grade Loop / Line Port Combination - Conversion - Switch-as-is | | | UEPBX | USAC2 | | 1.03 | 0.29 | | | | 15.69 | | | | |
| | 2-Wire Voice Grade Loop / Line Port Combination - Conversion - Switch with change | | | UEPBX | USACC | | 1.03 | 0.29 | | | | 15.69 | | | | |
| | 2-Wire Voice Grade Loop / Line Port Combination - Conversion - Subsequent Database Update | | | | | | 0.76 | | | | | 15.69 | | | | |
| ADDITIONAL NRCs | | | | | | | | | | | | | | | | |
| | 2-Wire Voice Grade Loop/Line Port Combination - Subsequent Activity | | | UEPBX | USAS2 | 0.00 | 0.00 | 0.00 | | | | 15.69 | | | | |
| | Unbundled Miscellaneous Rate Element, Tag Loop at End User Premise | | | UEPBX | URETL | | 8.33 | 0.83 | | | | | 20.35 | 10.54 | 13.32 | 13.32 |
| OFF/ON PREMISES EXTENSION CHANNELS | | | | | | | | | | | | | | | | |
| | 2 Wire Analog Voice Grade Extension Loop – Non-Design | | 1 | UEPBX | UEAEN | 13.19 | 31.99 | 20.02 | 10.65 | 1.41 | | | 20.35 | 10.54 | 13.32 | 13.32 |
| | 2 Wire Analog Voice Grade Extension Loop – Non-Design | | 2 | UEPBX | UEAEN | 17.23 | 31.99 | 20.02 | 10.65 | 1.41 | | | 20.35 | 10.54 | 13.32 | 13.32 |
| | 2 Wire Analog Voice Grade Extension Loop – Non-Design | | 3 | UEPBX | UEAEN | 22.53 | 31.99 | 20.02 | 10.65 | 1.41 | | | 20.35 | 10.54 | 13.32 | 13.32 |
| | 2 Wire Analog Voice Grade Extension Loop – Design | | 1 | UEPBX | UEAED | 16.56 | 75.06 | 48.20 | 28.70 | 17.64 | | | 20.35 | 10.54 | 13.32 | 13.32 |
| | 2 Wire Analog Voice Grade Extension Loop – Design | | 2 | UEPBX | UEAED | 21.63 | 75.06 | 48.20 | 28.70 | 17.64 | | | 20.35 | 10.54 | 13.32 | 13.32 |
| | 2 Wire Analog Voice Grade Extension Loop – Design | | 3 | UEPBX | UEAED | 28.28 | 75.06 | 48.20 | 28.70 | 17.64 | | | 20.35 | 10.54 | 13.32 | 13.32 |
| INTEROFFICE TRANSPORT | | | | | | | | | | | | | | | | |
| | Interoffice Transport - Dedicated - 2 Wire Voice Grade - Facility Termination | | | UEPBX | U1TV2 | 18.58 | 55.39 | 17.37 | 27.96 | 3.51 | | | | | | |
| | Interoffice Transport - Dedicated - 2 Wire Voice Grade - Per Mile or Fraction Mile | | | UEPBX | U1TVM | 0.0174 | 0.00 | 0.00 | | | | | | | | |
| 2-WIRE VOICE GRADE LOOP WITH 2-WIRE LINE PORT (RES - PBX) | | | | | | | | | | | | | | | | |
| UNE Port/Loop Combination Rates | | | | | | | | | | | | | | | | |
| | 2-Wire VG Loop/Port Combo - Zone 1 | | 1 | | | 14.18 | | | | | | | | | | |
| | 2-Wire VG Loop/Port Combo - Zone 2 | | 2 | | | 18.01 | | | | | | | | | | |
| | 2-Wire VG Loop/Port Combo - Zone 3 | | 3 | | | 23.02 | | | | | | | | | | |
| | 2-Wire Voice Grade Loop (SL 1) - Zone 1 | | 1 | UEPRG | UEPLX | 12.48 | | | | | | | | | | |
| | 2-Wire Voice Grade Loop (SL 1) - Zone 2 | | 2 | UEPRG | UEPLX | 16.31 | | | | | | | | | | |
| | 2-Wire Voice Grade Loop (SL 1) - Zone 3 | | 3 | UEPRG | UEPLX | 21.32 | | | | | | | | | | |
| 2-Wire Voice Grade Line Port Rates (RES - PBX) | | | | | | | | | | | | | | | | |

| UNBUNDLED NETWORK ELEMENTS - Tennessee | | | | | | | | | | | | | | Attachment: 2 | | Exhibit: A | |
|---|---|---|---|---|---|---|---|---|---|---|---|---|---|---|---|---|---|
| CATEGORY | RATE ELEMENTS | Interim | Zone | BCS | USOC | RATES ($) | | | | | Svc Order Submitted Elec per LSR | Svc Order Submitted Manually per LSR | Incremental Charge - Manual Svc Order vs. Electronic- 1st | Incremental Charge - Manual Svc Order vs. Electronic- Add'l | Incremental Charge - Manual Svc Order vs. Electronic- Disc 1st | Incremental Charge - Manual Svc Order vs. Electronic- Disc Add'l |
| | | | | | | Rec | Nonrecurring | | Nonrecurring Disconnect | | OSS Rates ($) | | | | | |
| | | | | | | | First | Add'l | First | Add'l | SOMEC | SOMAN | SOMAN | SOMAN | SOMAN | SOMAN |
| | 2-Wire VG Unbundled Combination 2-Way PBX Trunk Port - Res | | | UEPRG | UEPRD | 1.70 | 22.14 | 15.25 | 8.45 | 3.91 | | 15.69 | | | | |
| LOCAL NUMBER PORTABILITY | | | | | | | | | | | | | | | | |
| | Local Number Portability (1 per port) | | | UEPRG | LNPCP | 3.15 | 0.00 | 0.00 | | | | 15.69 | | | | |
| FEATURES | | | | | | | | | | | | | | | | |
| | All Features Offered | | | UEPRG | UEPVF | 0.00 | 0.00 | 0.00 | | | | 15.69 | | | | |
| NONRECURRING CHARGES (NRCs) - CURRENTLY COMBINED | | | | | | | | | | | | | | | | |
| | 2-Wire Voice Grade Loop/ Line Port Combination (PBX) - Conversion - Switch-As-Is | | | UEPRG | USAC2 | | 1.03 | 0.29 | | | | 15.69 | | | | |
| | 2-Wire Voice Grade Loop/ Line Port Combination (PBX) - Conversion - Switch with Change | | | UEPRG | USACC | | 1.03 | 0.29 | | | | 15.69 | | | | |
| | 2-Wire Voice Grade Loop / Line Port Combination - Conversion - Subsequent Database Update | | | | | | 0.76 | | | | | 15.69 | | | | |
| ADDITIONAL NRCs | | | | | | | | | | | | | | | | |
| | 2-Wire Voice Grade Loop/ Line Port Combination (PBX) - Subsequent Activity | | | UEPRG | USAS2 | 0.00 | 0.00 | 0.00 | | | | 15.69 | | | | |
| | PBX Subsequent Activity - Change/Rearrange Multiline Hunt Group | | | | | | 14.64 | 14.64 | | | | 15.69 | | | | |
| | Unbundled Miscellaneous Rate Element, Tag Loop at End User Premise | | | UEPRG | URETL | | 8.33 | 0.83 | | | | | 20.35 | 10.54 | 13.32 | 13.32 |
| OFF/ON PREMISES EXTENSION CHANNELS | | | | | | | | | | | | | | | | |
| | Local Channel Voice grade, per termination | | 1 | UEPRG | P2JHX | 16.56 | 75.06 | 48.20 | 28.70 | 17.64 | | | 20.35 | 10.54 | 13.32 | 13.32 |
| | Local Channel Voice grade, per termination | | 2 | UEPRG | P2JHX | 21.63 | 75.06 | 48.20 | 28.70 | 17.64 | | | 20.35 | 10.54 | 13.32 | 13.32 |
| | Local Channel Voice grade, per termination | | 3 | UEPRG | P2JHX | 28.28 | 75.06 | 48.20 | 28.70 | 17.64 | | | 20.35 | 10.54 | 13.32 | 13.32 |
| | Non-Wire Direct Serve Channel Voice Grade | | SW | UEPRG | SDD2X | 10.02 | 148.84 | 112.34 | 73.14 | 36.65 | | | 20.35 | 10.54 | 13.32 | 13.32 |
| INTEROFFICE TRANSPORT | | | | | | | | | | | | | | | | |
| | Interoffice Transport - Dedicated - 2 Wire Voice Grade - Facility Termination | | | UEPRG | U1TV2 | 18.58 | 55.39 | 17.37 | 27.96 | 3.51 | | | | | | |
| | Interoffice Transport - Dedicated - 2 Wire Voice Grade - Per Mile or Fraction Mile | | | UEPRG | U1TVM | 0.0174 | 0.00 | 0.00 | | | | | | | | |
| 2-WIRE VOICE GRADE LOOP WITH 2-WIRE LINE PORT (BUS - PBX) | | | | | | | | | | | | | | | | |
| UNE Port/Loop Combination Rates | | | | | | | | | | | | | | | | |
| | 2-Wire VG Loop/Port Combo - Zone 1 | | 1 | | | 14.18 | | | | | | | | | | |
| | 2-Wire VG Loop/Port Combo - Zone 2 | | 2 | | | 18.01 | | | | | | | | | | |
| | 2-Wire VG Loop/Port Combo - Zone 3 | | 3 | | | 23.02 | | | | | | | | | | |
| UNE Loop Rates | | | | | | | | | | | | | | | | |
| | 2-Wire Voice Grade Loop (SL 1) - Zone 1 | | 1 | UEPPX | UEPLX | 12.48 | | | | | | | | | | |
| | 2-Wire Voice Grade Loop (SL 1) - Zone 2 | | 2 | UEPPX | UEPLX | 16.31 | | | | | | | | | | |
| | 2-Wire Voice Grade Loop (SL 1) - Zone 3 | | 3 | UEPPX | UEPLX | 21.32 | | | | | | | | | | |
| 2-Wire Voice Grade Line Port Rates (BUS - PBX) | | | | | | | | | | | | | | | | |
| | Line Side Unbundled Combination 2-Way PBX Trunk Port - Bus | | | UEPPX | UEPPC | 1.70 | 22.14 | 15.25 | 8.45 | 3.91 | | 15.69 | | | | |
| | Line Side Unbundled Outward PBX Trunk Port - Bus | | | UEPPX | UEPPO | 1.70 | 22.14 | 15.25 | 8.45 | 3.91 | | 15.69 | | | | |
| | Line Side Unbundled Incoming PBX Trunk Port - Bus | | | UEPPX | UEPP1 | 1.70 | 22.14 | 15.25 | 8.45 | 3.91 | | 15.69 | | | | |
| | 2-Wire Voice Unbundled PBX LD Terminal Ports | | | UEPPX | UEPLD | 1.70 | 22.14 | 15.25 | 8.45 | 3.91 | | 15.69 | | | | |
| | 2-Wire Voice Unbundled 2-Way Combination PBX Tennessee Calling Port | | | UEPPX | UEPT2 | 1.70 | 22.14 | 15.25 | 8.45 | 3.91 | | 15.69 | | | | |
| | 2-Wire Voice Unbundled 1-Way Outgoing PBX Tennessee Calling Port | | | UEPPX | UEPTO | 1.70 | 22.14 | 15.25 | 8.45 | 3.91 | | 15.69 | | | | |
| | 2-Wire Voice Unbundled 2-Way Combination PBX Usage Port | | | UEPPX | UEPXA | 1.70 | 22.14 | 15.25 | 8.45 | 3.91 | | 15.69 | | | | |
| | 2-Wire Voice Unbundled PBX Toll Terminal Hotel Ports | | | UEPPX | UEPXB | 1.70 | 22.14 | 15.25 | 8.45 | 3.91 | | 15.69 | | | | |
| | 2-Wire Voice Unbundled PBX LD DDD Terminals Port | | | UEPPX | UEPXC | 1.70 | 22.14 | 15.25 | 8.45 | 3.91 | | 15.69 | | | | |
| | 2-Wire Voice Unbundled PBX LD Terminal Switchboard Port | | | UEPPX | UEPXD | 1.70 | 22.14 | 15.25 | 8.45 | 3.91 | | 15.69 | | | | |
| | 2-Wire Voice Unbundled PBX LD Terminal Switchboard IDD Capable Port | | | UEPPX | UEPXE | 1.70 | 22.14 | 15.25 | 8.45 | 3.91 | | 15.69 | | | | |
| | 2-Wire Voice Unbundled 2-Way PBX Hotel/Hospital Economy Administrative Calling Port | | | UEPPX | UEPXL | 1.70 | 22.14 | 15.25 | 8.45 | 3.91 | | 15.69 | | | | |
| | 2-Wire Voice Unbundled 2-Way PBX Hotel/Hospital Economy Room Calling Port | | | UEPPX | UEPXM | 1.70 | 22.14 | 15.25 | 8.45 | 3.91 | | 15.69 | | | | |

## UNBUNDLED NETWORK ELEMENTS - Tennessee

| CATEGORY | RATE ELEMENTS | Interim | Zone | BCS | USOC | RATES ($) | | | | | Svc Order Submitted Elec per LSR | Svc Order Submitted Manually per LSR | Attachment: 2 Incremental Charge - Manual Svc Order vs. Electronic- 1st | Attachment: 2 Incremental Charge - Manual Svc Order vs. Electronic- Add'l | Exhibit: A Incremental Charge - Manual Svc Order vs. Electronic- Disc 1st | Exhibit: A Incremental Charge - Manual Svc Order vs. Electronic- Disc Add'l |
|---|---|---|---|---|---|---|---|---|---|---|---|---|---|---|---|---|
| | | | | | | Rec | Nonrecurring | | Nonrecurring Disconnect | | | | OSS Rates ($) | | | |
| | | | | | | | First | Add'l | First | Add'l | SOMEC | SOMAN | SOMAN | SOMAN | SOMAN | SOMAN |
| | 2-Wire Voice Unbundled 1W Out PBX Hotel/Hospital Economy Administrative Calling Port TN Calling Port | | | UEPPX | UEPXN | 1.70 | 22.14 | 15.25 | 8.45 | 3.91 | | 15.69 | | | | |
| | 2-Wire Voice Unbundled 1-Way Outgoing PBX Hotel/Hospital Discount Room Calling Port | | | UEPPX | UEPXO | 1.70 | 22.14 | 15.25 | 8.45 | 3.91 | | 15.69 | | | | |
| | 2-Wire Voice Unbundled 1-Way Outgoing PBX Measured Port | | | UEPPX | UEPXS | 1.70 | 22.14 | 15.25 | 8.45 | 3.91 | | 15.69 | | | | |
| | 2-Wire Voice Unbundled PBX Collierville and Memphis Calling Port | | | UEPPX | UEPXU | 1.70 | 22.14 | 15.25 | 8.45 | 3.91 | | 15.69 | | | | |
| | 2-Wire Voice Unbundled 2-Way PBX Tennessee RegionServ Callling Port | | | UEPPX | UEPXV | 1.70 | 22.14 | 15.25 | 8.45 | 3.91 | | 15.69 | | | | |
| | Tennessee PBX 2-Way Combo Each Additional Trunk Collierville and Memphis Local Calling Plan | | | UEPPX | UEPA6 | 1.70 | 22.14 | 15.25 | 8.45 | 3.91 | | 15.69 | | | | |
| | Tennessee PBX 2-Way Combo First Trunk Collierville and Memphis Local Calling Plan | | | UEPPX | UEPA7 | 1.70 | 22.14 | 15.25 | 8.45 | 3.91 | | 15.69 | | | | |
| **LOCAL NUMBER PORTABILITY** | | | | | | | | | | | | | | | | |
| | Local Number Portability (1 per port) | | | UEPPX | LNPCP | 3.15 | 0.00 | 0.00 | | | | 15.69 | | | | |
| **FEATURES** | | | | | | | | | | | | | | | | |
| | All Features Offered | | | UEPPX | UEPVF | 0.00 | 0.00 | 0.00 | | | | 15.69 | | | | |
| **NONRECURRING CHARGES (NRCs) - CURRENTLY COMBINED** | | | | | | | | | | | | | | | | |
| | 2-Wire Voice Grade Loop/ Line Port Combination (PBX) - Conversion - Switch-As-Is | | | UEPPX | USAC2 | | 1.03 | 0.29 | | | | 15.69 | | | | |
| | 2-Wire Voice Grade Loop/ Line Port Combination (PBX) - Conversion - Switch with Change | | | UEPPX | USACC | | 1.03 | 0.29 | | | | 15.69 | | | | |
| | 2-Wire Voice Grade Loop / Line Port Combination - Conversion - Subsequent Database Update | | | | | | 0.76 | | | | | 15.69 | | | | |
| **ADDITIONAL NRCs** | | | | | | | | | | | | | | | | |
| | 2-Wire Voice Grade Loop/ Line Port Combination (PBX) - Subsequent Activity | | | UEPPX | USAS2 | 0.00 | 0.00 | 0.00 | | | | 15.69 | | | | |
| | PBX Subsequent Activity - Change/Rearrange Multiline Hunt Group | | | | | | 14.64 | 14.64 | | | | 15.69 | | | | |
| | Unbundled Miscellaneous Rate Element, Tag Loop at End User Premise | | | UEPPX | URETL | | 8.33 | 0.83 | | | | | 20.35 | 10.54 | 13.32 | 13.32 |
| **OFF/ON PREMISES EXTENSION CHANNELS** | | | | | | | | | | | | | | | | |
| | Local Channel Voice grade, per termination | | 1 | UEPPX | P2JHX | 16.56 | 75.06 | 48.20 | 28.70 | 17.64 | | | 20.35 | 10.54 | 13.32 | 13.32 |
| | Local Channel Voice grade, per termination | | 2 | UEPPX | P2JHX | 21.63 | 75.06 | 48.20 | 28.70 | 17.64 | | | 20.35 | 10.54 | 13.32 | 13.32 |
| | Local Channel Voice grade, per termination | | 3 | UEPPX | P2JHX | 28.28 | 75.06 | 48.20 | 28.70 | 17.64 | | | 20.35 | 10.54 | 13.32 | 13.32 |
| | Non-Wire Direct Serve Channel Voice Grade | | SW | UEPPX | SDD2X | 10.02 | 148.84 | 112.34 | 73.14 | 36.65 | | | 20.35 | 10.54 | 13.32 | 13.32 |
| **INTEROFFICE TRANSPORT** | | | | | | | | | | | | | | | | |
| | Interoffice Transport - Dedicated - 2 Wire Voice Grade - Facility Termination | | | UEPPX | U1TV2 | 18.58 | 55.39 | 17.37 | 27.96 | 3.51 | | | | | | |
| | Interoffice Transport - Dedicated - 2 Wire Voice Grade - Per Mile or Fraction Mile | | | UEPPX | U1TVM | 0.0174 | 0.00 | 0.00 | | | | | | | | |
| **UNE Port/Loop Combination Rates** | | | | | | | | | | | | | | | | |
| | 2-Wire VG Coin Port/Loop Combo – Zone 1 | | 1 | | | 14.18 | | | | | | | | | | |
| | 2-Wire VG Coin Port/Loop Combo – Zone 2 | | 2 | | | 18.01 | | | | | | | | | | |
| | 2-Wire VG Coin Port/Loop Combo – Zone 3 | | 3 | | | 23.02 | | | | | | | | | | |
| **UNE Loop Rates** | | | | | | | | | | | | | | | | |
| | 2-Wire Voice Grade Loop (SL1) - Zone 1 | | 1 | UEPCO | UEPLX | 12.48 | | | | | | | | | | |
| | 2-Wire Voice Grade Loop (SL1) - Zone 2 | | 2 | UEPCO | UEPLX | 16.31 | | | | | | | | | | |
| | 2-Wire Voice Grade Loop (SL1) - Zone 3 | | 3 | UEPCO | UEPLX | 21.32 | | | | | | | | | | |
| **2-Wire Voice Grade Line Ports (COIN)** | | | | | | | | | | | | | | | | |
| | 2-Wire Coin 2-Way without Operator Screening and without Blocking (TN) | | | UEPCO | UEPTB | 1.70 | 22.14 | 15.25 | 8.45 | 3.91 | | 15.69 | | | | |
| | 2-Wire Coin 2-Way with Operator Screening and Blocking: 011, 900/976, 1+DDD (NC, TN) | | | UEPCO | UEPRP | 1.70 | 22.14 | 15.25 | 8.45 | 3.91 | | 15.69 | | | | |
| | 2-Wire Coin 2-Way with Operator Screening and 011 Blocking (TN) | | | UEPCO | UEPTA | 1.70 | 22.14 | 15.25 | 8.45 | 3.91 | | 15.69 | | | | |
| | 2-Wire Coin 2-Way with Operator Screening: 900 Blocking: 900/976, 1+DDD, 011+, and Local (NC, TN) | | | UEPCO | UEPCA | 1.70 | 22.14 | 15.25 | 8.45 | 3.91 | | 15.69 | | | | |

## UNBUNDLED NETWORK ELEMENTS - Tennessee

| CATEGORY | RATE ELEMENTS | Interim | Zone | BCS | USOC | RATES ($) | | | | | Svc Order Submitted Elec per LSR | Svc Order Submitted Manually per LSR | Attachment: 2 Incremental Charge - Manual Svc Order vs. Electronic-1st | Attachment: 2 Incremental Charge - Manual Svc Order vs. Electronic-Add'l | Exhibit: A Incremental Charge - Manual Svc Order vs. Electronic-Disc 1st | Exhibit: A Incremental Charge - Manual Svc Order vs. Electronic-Disc Add'l |
|---|---|---|---|---|---|---|---|---|---|---|---|---|---|---|---|---|
| | | | | | | Rec | Nonrecurring | | Nonrecurring Disconnect | | OSS Rates ($) | | | | | |
| | | | | | | | First | Add'l | First | Add'l | SOMEC | SOMAN | SOMAN | SOMAN | SOMAN | SOMAN |
| | 2-Wire Coin Outward with Operator Screening and 011 Blocking (TN) | | | UEPCO | UEPTC | 1.70 | 22.14 | 15.25 | 8.45 | 3.91 | | 15.69 | | | | |
| | 2-Wire Coin Outward with Operator Screening and Blocking: 900/976, 1+DDD, 011+, and Local (TN) | | | UEPCO | UEPOT | 1.70 | 22.14 | 15.25 | 8.45 | 3.91 | | 15.69 | | | | |
| | 2-Wire 2-Way Smartline with 900/976 (all states except LA) | | | UEPCO | UEPCK | 1.88 | | | | | | 15.69 | | | | |
| | 2-Wire Coin Outward Smartline with 900/976 (all states except LA) | | | UEPCO | UEPCR | 1.88 | | | | | | 15.69 | | | | |
| **ADDITIONAL UNE COIN PORT/LOOP (RC)** | | | | | | | | | | | | | | | | |
| | UNE Coin Port/Loop Combo Usage (Flat Rate) | | | UEPCO | URECU | 3.45 | 0.00 | 0.00 | 0.00 | 0.00 | | 15.69 | | | | |
| | Local Number Portability (1 per port) | | | UEPCO | LNPCX | 0.35 | | | | | | | | | | |
| | 2-Wire Voice Grade Loop / Line Port Combination - Conversion - Switch-as-is | | | UEPCO | USAC2 | | 1.03 | 0.29 | | | | 15.69 | | | | |
| | 2-Wire Voice Grade Loop / Line Port Combination - Conversion - Switch with change | | | UEPCO | USACC | | 1.03 | 0.29 | | | | 15.69 | | | | |
| | 2-Wire Voice Grade Loop/Line Port Combination - Subsequent Activity | | | UEPCO | USAS2 | 0.00 | 0.00 | 0.00 | | | | 15.69 | | | | |
| | Unbundled Miscellaneous Rate Element, Tag Loop at End User Premise | | | UEPCO | URETL | | 8.33 | 0.83 | | | | | 20.35 | 10.54 | 13.32 | 13.32 |
| **2-WIRE VOICE LOOP/ 2WIRE VOICE GRADE IO TRANSPORT/ 2-WIRE LINE PORT (RES)** | | | | | | | | | | | | | | | | |
| **UNE Port/Loop Combination Rates** | | | | | | | | | | | | | | | | |
| | 2-Wire VG Loop/IO Tranport/Port Combo - Zone 1 | | 1 | | | 18.45 | | | | | | | | | | |
| | 2-Wire VG Loop/IO Tranport/Port Combo - Zone 2 | | 2 | | | 23.52 | | | | | | | | | | |
| | 2-Wire VG Loop/IO Tranport/Port Combo - Zone 3 | | 3 | | | 30.17 | | | | | | | | | | |
| **UNE Loop Rates** | | | | | | | | | | | | | | | | |
| | 2-Wire Voice Grade Loop (SL2) - Zone 1 | | 1 | UEPFR | UECF2 | 16.56 | | | | | | | | | | |
| | 2-Wire Voice Grade Loop (SL2) - Zone 2 | | 2 | UEPFR | UECF2 | 21.63 | | | | | | | | | | |
| | 2-Wire Voice Grade Loop (SL2) - Zone 3 | | 3 | UEPFR | UECF2 | 28.28 | | | | | | | | | | |
| **2-Wire Voice Grade Line Port Rates (Res)** | | | | | | | | | | | | | | | | |
| | 2-Wire voice unbundled port - residence | | | UEPFR | UEPRL | 1.89 | 84.99 | 57.39 | 32.36 | 20.56 | | 15.69 | | | | |
| | 2-Wire voice unbundled port with Caller ID - res | | | UEPFR | UEPRC | 1.89 | 84.99 | 57.39 | 32.36 | 20.56 | | 15.69 | | | | |
| | 2-Wire voice unbundled port outgoing only - res | | | UEPFR | UEPRO | 1.89 | 84.99 | 57.39 | 32.36 | 20.56 | | 15.69 | | | | |
| | 2-Wire voice Grade unbundled Tennessee extended local dialing parity port with Caller ID - res | | | UEPFR | UEPAQ | 1.89 | 84.99 | 57.39 | 32.36 | 20.56 | | 15.69 | | | | |
| | 2-Wire voice unbundled Tennessee Area Plus with Caller ID - res (AC7) | | | UEPFR | UEPAH | 1.89 | 84.99 | 57.39 | 32.36 | 20.56 | | 15.69 | | | | |
| | 2-Wire voice unbundled Tennessee Area Calling port with Caller ID - res (F2R) | | | UEPFR | UEPAK | 1.89 | 84.99 | 57.39 | 32.36 | 20.56 | | 15.69 | | | | |
| | 2-Wire voice unbundled Tennessee Area Calling port with Caller ID - res (TACER) | | | UEPFR | UEPAL | 1.89 | 84.99 | 57.39 | 32.36 | 20.56 | | 15.69 | | | | |
| | 2-Wire voice unbundled Tennessee Area Calling port with Caller ID - res (TACSR) | | | UEPFR | UEPAM | 1.89 | 84.99 | 57.39 | 32.36 | 20.56 | | 15.69 | | | | |
| | 2-Wire voice unbundled Tennessee Area Calling port with Caller ID - res (1MF2X) | | | UEPFR | UEPAN | 1.89 | 84.99 | 57.39 | 32.36 | 20.56 | | 15.69 | | | | |
| | 2-Wire voice unbundled Tennessee Area Calling port with Caller ID - res (2MR) | | | UEPFR | UEPAO | 1.89 | 84.99 | 57.39 | 32.36 | 20.56 | | 15.69 | | | | |
| | 2-Wire voice unbundles res, low usage line port with Caller ID (LUM) | | | UEPFR | UEPAP | 1.89 | 84.99 | 57.39 | 32.36 | 20.56 | | 15.69 | | | | |
| | 2-Wire Voice Unbundled Tennessee Residence Dialing Plan without Caller ID | | | UEPFR | UEPWN | 1.89 | 84.99 | 57.39 | 32.36 | 20.56 | | 15.69 | | | | |
| **INTEROFFICE TRANSPORT** | | | | | | | | | | | | | | | | |
| | Interoffice Transport - Dedicated - 2 Wire Voice Grade - Facility Termination | | | UEPFR | U1TV2 | 18.58 | 55.39 | 17.37 | 27.96 | 3.51 | | | | | | |
| | Interoffice Transport - Dedicated - 2 Wire Voice Grade - Per Mile or Fraction Mile | | | UEPFR | 1L5XX | 0.0174 | | | | | | | | | | |
| **FEATURES** | | | | | | | | | | | | | | | | |
| | All Features Offered | | | UEPFR | UEPVF | 0.00 | 0.00 | 0.00 | | | | 15.69 | | | | |
| **LOCAL NUMBER PORTABILITY** | | | | | | | | | | | | | | | | |
| | Local Number Portability (1 per port) | | | UEPFR | LNPCX | 0.35 | | | | | | | | | | |
| **NONRECURRING CHARGES (NRCs) - CURRENTLY COMBINED** | | | | | | | | | | | | | | | | |

| UNBUNDLED NETWORK ELEMENTS - Tennessee | | | | | | | | | | | | | | Attachment: 2 | | Exhibit: A | |
|---|---|---|---|---|---|---|---|---|---|---|---|---|---|---|---|---|---|
| CATEGORY | RATE ELEMENTS | Interim | Zone | BCS | USOC | RATES ($) | | | | | Svc Order Submitted Elec per LSR | Svc Order Submitted Manually per LSR | Incremental Charge - Manual Svc Order vs. Electronic-1st | Incremental Charge - Manual Svc Order vs. Electronic-Add'l | Incremental Charge - Manual Svc Order vs. Electronic-Disc 1st | Incremental Charge - Manual Svc Order vs. Electronic-Disc Add'l |
| | | | | | | Rec | Nonrecurring | | Nonrecurring Disconnect | | OSS Rates ($) | | | | | |
| | | | | | | | First | Add'l | First | Add'l | SOMEC | SOMAN | SOMAN | SOMAN | SOMAN | SOMAN |
| | 2-Wire Loop / Dedicated IO Transport / 2 Wire Line Port Combination - Conversion - Switch-as-is | | | UEPFR | USAC2 | | 16.94 | 3.72 | | | | 15.69 | | | | |
| | 2-Wire Loop / Dedicated IO Transport / 2 Wire Line Port Combination - Conversion - Switch-With-Change | | | UEPFR | USACC | | 16.94 | 3.72 | | | | 15.69 | | | | |
| | Unbundled Miscellaneous Rate Element, Tag Designed Loop at End User Premise | | | UEPFR | URETN | | 11.23 | 1.10 | | | | | 20.35 | 10.54 | 13.32 | 13.32 |
| **2-WIRE VOICE LOOP/ 2WIRE VOICE GRADE IO TRANSPORT/ 2-WIRE LINE PORT (BUS)** | | | | | | | | | | | | | | | | |
| **UNE Port/Loop Combination Rates** | | | | | | | | | | | | | | | | |
| | 2-Wire VG Loop/IO Tranport/Port Combo - Zone 1 | | 1 | | | 18.45 | | | | | | | | | | |
| | 2-Wire VG Loop/IO Tranport/Port Combo - Zone 2 | | 2 | | | 23.52 | | | | | | | | | | |
| | 2-Wire VG Loop/IO Tranport/Port Combo - Zone 3 | | 3 | | | 30.17 | | | | | | | | | | |
| **UNE Loop Rates** | | | | | | | | | | | | | | | | |
| | 2-Wire Voice Grade Loop (SL2) - Zone 1 | | 1 | UEPFB | UECF2 | 16.56 | | | | | | | | | | |
| | 2-Wire Voice Grade Loop (SL2) - Zone 2 | | 2 | UEPFB | UECF2 | 21.63 | | | | | | | | | | |
| | 2-Wire Voice Grade Loop (SL2) - Zone 3 | | 3 | UEPFB | UECF2 | 28.28 | | | | | | | | | | |
| **2-Wire Voice Grade Line Port (Bus)** | | | | | | | | | | | | | | | | |
| | 2-Wire voice unbundled port without Caller ID - bus | | | UEPFB | UEPBL | 1.89 | 84.99 | 57.39 | 32.36 | 20.56 | | 15.69 | | | | |
| | 2-Wire voice unbundled port with Caller + E484 ID - bus | | | UEPFB | UEPBC | 1.89 | 84.99 | 57.39 | 32.36 | 20.56 | | 15.69 | | | | |
| | 2-Wire voice unbundled port outgoing only - bus | | | UEPFB | UEPBO | 1.89 | 84.99 | 57.39 | 32.36 | 20.56 | | 15.69 | | | | |
| | 2-Wire voice Grade unbundled Tennessee extended local dialing parity port with Caller ID - bus | | | UEPFB | UEPAV | 1.89 | 84.99 | 57.39 | 32.36 | 20.56 | | 15.69 | | | | |
| | 2-Wire voice unbundled incoming only port with Caller ID - Bus | | | UEPFB | UEPB1 | 1.89 | 84.99 | 57.39 | 32.36 | 20.56 | | 15.69 | | | | |
| | 2-Wire voice unbundled Tennessee Bus 2-Way Area Calling Port Economy Option (TACC1) | | | UEPFB | UEPAC | 1.89 | 84.99 | 57.39 | 32.36 | 20.56 | | 15.69 | | | | |
| | 2-Wire voice unbundled Tennessee Bus 2-Way Area Calling Port Standard Option (TACC2) | | | UEPFB | UEPAD | 1.89 | 84.99 | 57.39 | 32.36 | 20.56 | | 15.69 | | | | |
| | 2-Wire voice unbundled Tennessee Bus 2-Way Collierville and Memphis Local Calling Port (B2F) | | | UEPFB | UEPAE | 1.89 | 84.99 | 57.39 | 32.36 | 20.56 | | 15.69 | | | | |
| | 2-Wire Voice Unbundled Tennessee Business Dialing Plan without Caller ID | | | UEPFB | UEPWO | 1.89 | 84.99 | 57.39 | 32.36 | 20.56 | | 15.69 | | | | |
| | Tennessee Inward Collierville and Memphis Local Calling Plan (BUS) | | | UEPFB | UEPB2 | 1.89 | 84.99 | 57.39 | 32.36 | 20.56 | | 15.69 | | | | |
| | Tennessee 2-Way Collierville and Memphis Local Calling Plan (BUS) | | | UEPFB | UEPB3 | 1.89 | 84.99 | 57.39 | 32.36 | 20.56 | | 15.69 | | | | |
| **LOCAL NUMBER PORTABILITY** | | | | | | | | | | | | | | | | |
| | Local Number Portability (1 per port) | | | UEPFB | LNPCX | 0.35 | | | | | | | | | | |
| **INTEROFFICE TRANSPORT** | | | | | | | | | | | | | | | | |
| | Interoffice Transport - Dedicated - 2 Wire Voice Grade - Facility Termination | | | UEPFB | U1TV2 | 18.58 | 55.39 | 17.37 | 27.96 | 3.51 | | | | | | |
| | Interoffice Transport - Dedicated - 2 Wire Voice Grade - Per Mile or Fraction Mile | | | UEPFB | 1L5XX | 0.0174 | | | | | | | | | | |
| **FEATURES** | | | | | | | | | | | | | | | | |
| | All Features Offered | | | UEPFB | UEPVF | 0.00 | 0.00 | 0.00 | | | | 15.69 | | | | |
| **NONRECURRING CHARGES (NRCs) - CURRENTLY COMBINED** | | | | | | | | | | | | | | | | |
| | 2-Wire Loop / Dedicated IO Transport / 2 Wire Line Port Combination - Conversion - Switch-as-is | | | UEPFB | USAC2 | | 16.94 | 3.72 | | | | 15.69 | | | | |
| | 2-Wire Loop / Dedicated IO Transport / 2 Wire Line Port Combination - Conversion - Switch with change | | | UEPFB | USACC | | 16.94 | 3.72 | | | | 15.69 | | | | |
| | Unbundled Miscellaneous Rate Element, Tag Designed Loop at End User Premise | | | UEPFB | URETN | | 11.23 | 1.10 | | | | | 20.35 | 10.54 | 13.32 | 13.32 |
| **2-WIRE VOICE LOOP/ 2WIRE VOICE GRADE IO TRANSPORT/ 2-WIRE LINE PORT (PBX)** | | | | | | | | | | | | | | | | |
| **UNE Port/Loop Combination Rates** | | | | | | | | | | | | | | | | |
| | 2-Wire VG Loop/IO Tranport/Port Combo - Zone 1 | | 1 | | | 18.45 | | | | | | | | | | |
| | 2-Wire VG Loop/IO Tranport/Port Combo - Zone 2 | | 2 | | | 23.52 | | | | | | | | | | |
| | 2-Wire VG Loop/IO Tranport/Port Combo - Zone 3 | | 3 | | | 30.17 | | | | | | | | | | |
| **UNE Loop Rates** | | | | | | | | | | | | | | | | |
| | 2-Wire Voice Grade Loop (SL2) - Zone 1 | | 1 | UEPFP | UECF2 | 16.56 | | | | | | | | | | |
| | 2-Wire Voice Grade Loop (SL2) - Zone 2 | | 2 | UEPFP | UECF2 | 21.63 | | | | | | | | | | |
| | 2-Wire Voice Grade Loop (SL2) - Zone 3 | | 3 | UEPFP | UECF2 | 28.28 | | | | | | | | | | |

| UNBUNDLED NETWORK ELEMENTS - Tennessee | | | | | | | | | | | | | | Attachment: 2 | | Exhibit: A | |
|---|---|---|---|---|---|---|---|---|---|---|---|---|---|---|---|---|---|
| CATEGORY | RATE ELEMENTS | Interim | Zone | BCS | USOC | RATES ($) | | | | | Svc Order Submitted Elec per LSR | Svc Order Submitted Manually per LSR | Incremental Charge - Manual Svc Order vs. Electronic-1st | Incremental Charge - Manual Svc Order vs. Electronic-Add'l | Incremental Charge - Manual Svc Order vs. Electronic-Disc 1st | Incremental Charge - Manual Svc Order vs. Electronic-Disc Add'l |
| | | | | | | Rec | Nonrecurring | | Nonrecurring Disconnect | | OSS Rates ($) | | | | | |
| | | | | | | | First | Add'l | First | Add'l | SOMEC | SOMAN | SOMAN | SOMAN | SOMAN | SOMAN |
| 2-Wire Voice Grade Line Port Rates (BUS - PBX) | | | | | | | | | | | | | | | | |
| | Line Side Unbundled Combination 2-Way PBX Trunk Port - Bus | | | UEPFP | UEPPC | 1.79 | 106.40 | 63.08 | 42.67 | 18.54 | | 15.69 | | | | |
| | Line Side Unbundled Outward PBX Trunk Port - Bus | | | UEPFP | UEPPO | 1.79 | 106.40 | 63.08 | 42.67 | 18.54 | | 15.69 | | | | |
| | Line Side Unbundled Incoming PBX Trunk Port - Bus | | | UEPFP | UEPP1 | 1.79 | 106.40 | 63.08 | 42.67 | 18.54 | | 15.69 | | | | |
| | 2-Wire Voice Unbundled PBX LD Terminal Ports | | | UEPFP | UEPLD | 1.79 | 106.40 | 63.08 | 42.67 | 18.54 | | 15.69 | | | | |
| | 2-Wire Voice Unbundled 2-Way Combination PBX Tennessee Calling Port | | | UEPFP | UEPT2 | 1.79 | 106.40 | 63.08 | 42.67 | 18.54 | | 15.69 | | | | |
| | 2-Wire Voice Unbundled 1-Way Outgoing PBX Tennessee Calling Port | | | UEPFP | UEPTO | 1.79 | 106.40 | 63.08 | 42.67 | 18.54 | | 15.69 | | | | |
| | 2-Wire Voice Unbundled 2-Way Combination PBX Usage Port | | | UEPFP | UEPXA | 1.79 | 106.40 | 63.08 | 42.67 | 18.54 | | 15.69 | | | | |
| | 2-Wire Voice Unbundled PBX Toll Terminal Hotel Ports | | | UEPFP | UEPXB | 1.79 | 106.40 | 63.08 | 42.67 | 18.54 | | 15.69 | | | | |
| | 2-Wire Voice Unbundled PBX LD DDD Terminals Port | | | UEPFP | UEPXC | 1.79 | 106.40 | 63.08 | 42.67 | 18.54 | | 15.69 | | | | |
| | 2-Wire Voice Unbundled PBX LD Terminal Switchboard Port | | | UEPFP | UEPXD | 1.79 | 106.40 | 63.08 | 42.67 | 18.54 | | 15.69 | | | | |
| | 2-Wire Voice Unbundled PBX LD Terminal Switchboard IDD Capable Port | | | UEPFP | UEPXE | 1.79 | 106.40 | 63.08 | 42.67 | 18.54 | | 15.69 | | | | |
| | 2-Wire Voice Unbundled 2-Way PBX Hotel/Hospital Economy Administrative Calling Port | | | UEPFP | UEPXL | 1.79 | 106.40 | 63.08 | 42.67 | 18.54 | | 15.69 | | | | |
| | 2-Wire Voice Unbundled 2-Way PBX Hotel/Hospital Economy Room Calling Port | | | UEPFP | UEPXM | 1.79 | 106.40 | 63.08 | 42.67 | 18.54 | | 15.69 | | | | |
| | 2-Wire Voice Unbundled 1W Out PBX Hotel/Hospital Economy Administrative Calling Port TN Calling Port | | | UEPFP | UEPXN | 1.79 | 106.40 | 63.08 | 42.67 | 18.54 | | 15.69 | | | | |
| | 2-Wire Voice Unbundled 1-Way Outgoing PBX Hotel/Hospital Discount Room Calling Port | | | UEPFP | UEPXO | 1.79 | 106.40 | 63.08 | 42.67 | 18.54 | | 15.69 | | | | |
| | 2-Wire Voice Unbundled 1-Way Outgoing PBX Measured Port | | | UEPFP | UEPXS | 1.79 | 106.40 | 63.08 | 42.67 | 18.54 | | 15.69 | | | | |
| | 2-Wire Voice Unbundled PBX Collierville and Memphis Calling Port | | | UEPFP | UEPXU | 1.79 | 106.40 | 63.08 | 42.67 | 18.54 | | 15.69 | | | | |
| | 2-Wire Voice Unbundled 2-Way PBX Tennessee RegionServ Callling Port | | | UEPFP | UEPXV | 1.79 | 106.40 | 63.08 | 42.67 | 18.54 | | 15.69 | | | | |
| LOCAL NUMBER PORTABILITY | | | | | | | | | | | | | | | | |
| | Local Number Portability (1 per port) | | | UEPFP | LNPCP | 3.15 | 0.00 | 0.00 | | | | 15.69 | | | | |
| INTEROFFICE TRANSPORT | | | | | | | | | | | | | | | | |
| | Interoffice Transport - Dedicated - 2 Wire Voice Grade - Facility Termination | | | UEPFP | U1TV2 | 18.58 | 55.39 | 17.37 | 27.96 | 3.51 | | | | | | |
| | Interoffice Transport - Dedicated - 2 Wire Voice Grade - Per Mile or Fraction Mile | | | UEPFP | 1L5XX | 0.0174 | | | | | | | | | | |
| FEATURES | | | | | | | | | | | | | | | | |
| | All Features Offered | | | UEPFP | UEPVF | 0.00 | 0.00 | 0.00 | | | | 15.69 | | | | |
| NONRECURRING CHARGES (NRCs) - CURRENTLY COMBINED | | | | | | | | | | | | | | | | |
| | 2-Wire Loop / Dedicated IO Transport / 2 Wire Line Port Combination - Conversion - Switch-as-is | | | UEPFP | USAC2 | | 16.94 | 3.72 | | | | 15.69 | | | | |
| | 2-Wire Loop / Dedicated IO Transport / 2 Wire Line Port Combination - Conversion - Switch with change | | | UEPFP | USACC | | 16.94 | 3.72 | | | | 15.69 | | | | |
| | Unbundled Miscellaneous Rate Element, Tag Designed Loop at End User Premise | | | UEPFP | URETN | | 11.23 | 1.10 | | | | | 20.35 | 10.54 | 13.32 | 13.32 |
| UNBUNDLED PORT/LOOP COMBINATIONS - COST BASED RATES | | | | | | | | | | | | | | | | |
| 2-WIRE VOICE GRADE LOOP- BUS ONLY - WITH 2-WIRE DID TRUNK PORT | | | | | | | | | | | | | | | | |
| UNE Port/Loop Combination Rates | | | | | | | | | | | | | | | | |
| | 2-Wire VG Loop/2-Wire DID Trunk Port Combo - UNE Zone 1 | | 1 | | | 18.38 | | | | | | | | | | |
| | 2-Wire VG Loop/2-Wire DID Trunk Port Combo - UNE Zone 2 | | 2 | | | 19.87 | | | | | | | | | | |
| | 2-Wire VG Loop/2-Wire DID Trunk Port Combo - UNE Zone 3 | | 3 | | | 24.78 | | | | | | | | | | |
| UNE Loop Rates | | | | | | | | | | | | | | | | |
| | 2-Wire Analog Voice Grade Loop - (SL2) - UNE Zone 1 | | 1 | UEPPX | UECD1 | 9.60 | | | | | | | | | | |
| | 2-Wire Analog Voice Grade Loop - (SL2) - UNE Zone 2 | | 2 | UEPPX | UECD1 | 11.09 | | | | | | | | | | |
| | 2-Wire Analog Voice Grade Loop - (SL2) - UNE Zone 3 | | 3 | UEPPX | UECD1 | 16.00 | | | | | | | | | | |
| UNE Port Rate | | | | | | | | | | | | | | | | |
| | Exchange Ports - 2-Wire DID Port | | | UEPPX | UEPD1 | 8.78 | 45.44 | 29.94 | 8.45 | 3.91 | | | 30.89 | 7.03 | | |
| NONRECURRING CHARGES - CURRENTLY COMBINED | | | | | | | | | | | | | | | | |

## UNBUNDLED NETWORK ELEMENTS - Tennessee

| CATEGORY | RATE ELEMENTS | Interim | Zone | BCS | USOC | RATES ($) | | | | | Svc Order Submitted Elec per LSR | Svc Order Submitted Manually per LSR | Attachment: 2 Incremental Charge - Manual Svc Order vs. Electronic-1st | Attachment: 2 Incremental Charge - Manual Svc Order vs. Electronic-Add'l | Exhibit: A Incremental Charge - Manual Svc Order vs. Electronic-Disc 1st | Exhibit: A Incremental Charge - Manual Svc Order vs. Electronic-Disc Add'l |
|---|---|---|---|---|---|---|---|---|---|---|---|---|---|---|---|---|
| | | | | | | Rec | Nonrecurring | | Nonrecurring Disconnect | | OSS Rates ($) | | | | | |
| | | | | | | | First | Add'l | First | Add'l | SOMEC | SOMAN | SOMAN | SOMAN | SOMAN | SOMAN |
| | 2-Wire Voice Grade Loop / 2-Wire DID Trunk Port Combination - Switch-as-is | | | UEPPX | USAC1 | | 8.76 | 5.75 | | | | | 30.89 | 7.03 | | |
| | 2-Wire Voice Grade Loop / 2-Wire DID Trunk Port Conversion with BellSouth Allowable Changes | | | UEPPX | USA1C | | 8.76 | 5.75 | | | | | 30.89 | 7.03 | | |
| | Unbundled Miscellaneous Rate Element, Tag Designed Loop at End User Premise | | | UEPPX | URETN | | 11.23 | 1.10 | | | | | | | | |
| | **Telephone Number/Trunk Group Establisment Charges** | | | | | | | | | | | | | | | |
| | DID Trunk Termination (One Per Port) | | | UEPPX | NDT | 0.00 | 0.00 | 0.00 | | | | | | | | |
| | Additional DID Numbers for each Group of 20 DID Numbers | | | UEPPX | ND4 | 0.00 | 0.00 | 0.00 | | | | | | | | |
| | DID Numbers, Non- consecutive DID Numbers , Per Number | | | UEPPX | ND5 | 0.00 | 0.00 | 0.00 | | | | | | | | |
| | Reserve Non-Consecutive DID numbers | | | UEPPX | ND6 | 0.00 | 0.00 | 0.00 | | | | | | | | |
| | Reserve DID Numbers | | | UEPPX | NDV | 0.00 | 0.00 | 0.00 | | | | | | | | |
| | **LOCAL NUMBER PORTABILITY** | | | | | | | | | | | | | | | |
| | Local Number Portability (1 per port) | | | UEPPX | LNPCP | 3.15 | 0.00 | 0.00 | | | | | | | | |
| | **2-WIRE ISDN DIGITAL GRADE LOOP WITH 2-WIRE ISDN DIGITAL LINE SIDE PORT** | | | | | | | | | | | | | | | |
| | **UNE Port/Loop Combination Rates** | | | | | | | | | | | | | | | |
| | 2W ISDN Digital Grade Loop/2W ISDN Digital Line Side Port - UNE Zone 1 | | 1 | UEPPB UEPPR | | 32.27 | | | | | | | | | | |
| | 2W ISDN Digital Grade Loop/2W ISDN Digital Line Side Port - UNE Zone 2 | | 2 | UEPPB UEPPR | | 34.78 | | | | | | | | | | |
| | 2W ISDN Digital Grade Loop/2W ISDN Digital Line Side Port - UNE Zone 3 | | 3 | UEPPB UEPPR | | 44.32 | | | | | | | | | | |
| | **UNE Loop Rates** | | | | | | | | | | | | | | | |
| | 2-Wire ISDN Digital Grade Loop - UNE Zone 1 | | 1 | UEPPB UEPPR | USL2X | 16.20 | | | | | | | | | | |
| | 2-Wire ISDN Digital Grade Loop - UNE Zone 2 | | 2 | UEPPB UEPPR | USL2X | 18.71 | | | | | | | | | | |
| | 2-Wire ISDN Digital Grade Loop - UNE Zone 3 | | 3 | UEPPB UEPPR | USL2X | 28.25 | | | | | | | | | | |
| | **UNE Port Rate** | | | | | | | | | | | | | | | |
| | Exchange Port - 2-Wire ISDN Line Side Port | | | UEPPB UEPPR | UEPPB | 16.07 | 141.75 | 118.37 | 49.20 | 43.26 | | | 19.99 | 19.99 | | |
| | **NONRECURRING CHARGES - CURRENTLY COMBINED** | | | | | | | | | | | | | | | |
| | 2-Wire ISDN Digital Grade Loop / 2-Wire ISDN Line Side Port Combination - Conversion | | | UEPPB UEPPR | USACB | 0.00 | 117.23 | 117.23 | | | | | 19.99 | 19.99 | | |
| | **ADDITIONAL NRCs** | | | | | | | | | | | | | | | |
| | 2-Wire ISDN Loop / 2-Wire ISDN Port Combination - Sub Actvy - Non Feature/Add Trunk | | | UEPPB UEPPR | USASB | | 212.88 | | | | | | 19.99 | 19.99 | | |
| | Unbundled Miscellaneous Rate Element, Tag Designed Loop at End User Premise | | | UEPPB UEPPR | URETN | | 11.23 | 1.10 | | | | | | | | |
| | Unbundled Miscellaneous Rate Element, Tag Loop at End User Premise | | | UEPPB UEPPR | URETL | | 8.33 | 0.83 | | | | | | | | |
| | **LOCAL NUMBER PORTABILITY** | | | | | | | | | | | | | | | |
| | Local Number Portability (1 per port) | | | UEPPB UEPPR | LNPCX | 0.35 | 0.00 | 0.00 | | | | | | | | |
| | **B-CHANNEL USER PROFILE ACCESS:** | | | | | | | | | | | | | | | |
| | CVS/CSD (DMS/5ESS) | | | UEPPB UEPPR | U1UCA | 0.00 | 0.00 | 0.00 | | | | | | | | |
| | CVS (EWSD) | | | UEPPB UEPPR | U1UCB | 0.00 | 0.00 | 0.00 | | | | | | | | |
| | CSD | | | UEPPB UEPPR | U1UCC | 0.00 | 0.00 | 0.00 | | | | | | | | |
| | **B-CHANNEL AREA PLUS USER PROFILE ACCESS: (AL,KY,LA,MS SC,MS, & TN)** | | | | | | | | | | | | | | | |
| | CVS/CSD (DMS/5ESS) | | | UEPPB UEPPR | U1UCD | 0.00 | 0.00 | 0.00 | | | | | | | | |
| | CVS (EWSD) | | | UEPPB UEPPR | U1UCE | 0.00 | 0.00 | 0.00 | | | | | | | | |
| | CSD | | | UEPPB UEPPR | U1UCF | 0.00 | 0.00 | 0.00 | | | | | | | | |
| | **USER TERMINAL PROFILE** | | | | | | | | | | | | | | | |
| | User Terminal Profile (EWSD only) | | | UEPPB UEPPR | U1UMA | 0.00 | 0.00 | 0.00 | | | | | | | | |
| | **VERTICAL FEATURES** | | | | | | | | | | | | | | | |
| | All Vertical Features - One per Channel B User Profile | | | UEPPB UEPPR | UEPVF | 0.00 | 0.00 | 0.00 | | | | | | | | |
| | **INTEROFFICE CHANNEL MILEAGE** | | | | | | | | | | | | | | | |
| | Interoffice Channel mileage each, including first mile and facilities termination | | | UEPPB UEPPR | M1GNC | 17.91 | 53.99 | 17.37 | | | | | 19.99 | 19.99 | | |
| | Interoffice Channel mileage each, additional mile | | | UEPPB UEPPR | M1GNM | 0.173 | 0.00 | 0.00 | | | | | | | | |
| | **4-WIRE DS1 DIGITAL LOOP WITH 4-WIRE ISDN DS1 DIGITAL TRUNK PORT** | | | | | | | | | | | | | | | |
| | **The UNE-P DS1 combination rates below for in this rate exhibit apply to the embedded base in place as of 10/2/03 until 4/1/04. After 4/1/04 these rates shall revert to tariff rates or a separate commercial agreement.** | | | | | | | | | | | | | | | |

| UNBUNDLED NETWORK ELEMENTS - Tennessee | | | | | | | | | | | | | | Attachment: 2 | | Exhibit: A | |
|---|---|---|---|---|---|---|---|---|---|---|---|---|---|---|---|---|---|
| CATEGORY | RATE ELEMENTS | Interim | Zone | BCS | USOC | RATES ($) | | | | | Svc Order Submitted Elec per LSR | Svc Order Submitted Manually per LSR | Incremental Charge - Manual Svc Order vs. Electronic-1st | Incremental Charge - Manual Svc Order vs. Electronic-Add'l | Incremental Charge - Manual Svc Order vs. Electronic-Disc 1st | Incremental Charge - Manual Svc Order vs. Electronic-Disc Add'l |
| | | | | | | Rec | Nonrecurring | | Nonrecurring Disconnect | | OSS Rates ($) | | | | | |
| | | | | | | | First | Add'l | First | Add'l | SOMEC | SOMAN | SOMAN | SOMAN | SOMAN | SOMAN |
| | Requests for 4-Wire DS1 Digital Loop with 4-Wire ISDN DS1 Digital Trunk Port after the effective date of this amendment shall be provided pursuant to a separate agreement or tariff at BellSouth's discretion. | | | | | | | | | | | | | | | |
| | UNE Port/Loop Combination Rates | | | | | | | | | | | | | | | |
| | 4W DS1 Digital Loop/4W ISDN DS1 Digital Trunk Port - UNE Zone 1 | | 1 | UEPPP | | 132.58 | | | | | | | | | | |
| | 4W DS1 Digital Loop/4W ISDN DS1 Digital Trunk Port - UNE Zone 2 | | 2 | UEPPP | | 150.25 | | | | | | | | | | |
| | 4W DS1 Digital Loop/4W ISDN DS1 Digital Trunk Port - UNE Zone 3 | | 3 | UEPPP | | 173.44 | | | | | | | | | | |
| | UNE Loop Rates | | | | | | | | | | | | | | | |
| | 4-Wire DS1 Digital Loop - UNE Zone 1 | | 1 | UEPPP | USL4P | 57.73 | | | | | | | | | | |
| | 4-Wire DS1 Digital Loop - UNE Zone 2 | | 2 | UEPPP | USL4P | 75.40 | | | | | | | | | | |
| | 4-Wire DS1 Digital Loop - UNE Zone 3 | | 3 | UEPPP | USL4P | 98.59 | | | | | | | | | | |
| | UNE Port Rate | | | | | | | | | | | | | | | |
| | Exchange Ports - 4-Wire ISDN DS1 Port (E:4/1/2004) | | | UEPPP | UEPPP | 74.85 | 415.53 | 366.90 | 89.28 | 77.43 | | | 19.99 | 19.99 | | |
| | NONRECURRING CHARGES - CURRENTLY COMBINED | | | | | | | | | | | | | | | |
| | 4-Wire DS1 Digital Loop / 4-Wire ISDN DS1 Digital Trunk Port Combination - Conversion -Switch-as-is (E:4/1/2004) | | | UEPPP | USACP | 0.00 | 328.53 | 328.53 | | | | | 19.99 | 19.99 | | |
| | ADDITIONAL NRCs | | | | | | | | | | | | | | | |
| | 4-Wire DS1 Loop/4-W ISDN Digtl Trk Port - Subsqt Actvy-Inward/two way Tel Nos. (except NC) | | | UEPPP | PR7TF | | 0.94 | | | | | | 19.99 | 19.99 | | |
| | 4-Wire DS1 Loop / 4-Wire ISDN DS1 Digital Trunk Port - Outward Tel Numbers (All States except NC) | | | UEPPP | PR7TO | | 22.36 | 22.36 | | | | | 19.99 | 19.99 | | |
| | 4-Wire DS1 Loop / 4-Wire ISDN DS1 Digital Trk Port - Subsequent Inward Tel Numbers | | | UEPPP | PR7ZT | | 44.71 | 44.70 | | | | | 19.99 | 19.99 | | |
| | LOCAL NUMBER PORTABILITY | | | | | | | | | | | | | | | |
| | Local Number Portability (1 per port) | | | UEPPP | LNPCN | 1.75 | | | | | | | | | | |
| | INTERFACE (Provsioning Only) | | | | | | | | | | | | | | | |
| | Voice/Data | | | UEPPP | PR71V | 0.00 | 0.00 | 0.00 | | | | | | | | |
| | Digital Data | | | UEPPP | PR71D | 0.00 | 0.00 | 0.00 | | | | | | | | |
| | Inward Data | | | UEPPP | PR71E | 0.00 | 0.00 | 0.00 | | | | | | | | |
| | New or Additional "B" Channel | | | | | | | | | | | | | | | |
| | New or Additional - Voice/Data B Channel | | | UEPPP | PR7BV | 0.00 | 28.39 | | | | | | 19.99 | 19.99 | | |
| | New or Additional - Digital Data B Channel | | | UEPPP | PR7BF | 0.00 | 29.11 | | | | | | 19.99 | 19.99 | | |
| | New or Additional Inward Data B Channel | | | UEPPP | PR7BD | 0.00 | 29.39 | | | | | | 19.99 | 19.99 | | |
| | CALL TYPES | | | | | | | | | | | | | | | |
| | Inward | | | UEPPP | PR7C1 | 0.00 | 0.00 | 0.00 | | | | | | | | |
| | Outward | | | UEPPP | PR7CO | 0.00 | 0.00 | 0.00 | | | | | | | | |
| | Two-way | | | UEPPP | PR7CC | 0.00 | 0.00 | 0.00 | | | | | | | | |
| | Interoffice Channel Mileage | | | | | | | | | | | | | | | |
| | Fixed Each Including First Mile | | | UEPPP | 1LN1A | 76.1825 | 145.98 | 109.85 | 19.55 | | | | 19.99 | 19.99 | | |
| | Each Airline-Fractional Additional Mile | | | UEPPP | 1LN1B | 0.3525 | | | | | | | | | | |
| | 4-WIRE DS1 DIGITAL LOOP WITH 4-WIRE DDITS TRUNK PORT | | | | | | | | | | | | | | | |
| | The UNE-P DS1 combination rates below for in this rate exhibit apply to the embedded base in place as of 10/2/03 until 4/1/04. After 4/1/04 these rates shall revert to tariff rates or a separate commercial agreement. | | | | | | | | | | | | | | | |
| | Requests for 4-Wire DS1 Digital Loop with 4-Wire DDITS after the effective date of this amendment shall be provided pursuant to a separate agreement or tariff at BellSouth's discretion. | | | | | | | | | | | | | | | |
| | UNE Port/Loop Combination Rates | | | | | | | | | | | | | | | |
| | 4W DS1 Digital Loop/4W DDITS Trunk Port - UNE Zone 1 | | 1 | UEPDC | | 93.28 | | | | | | | 19.99 | 19.99 | | |
| | 4W DS1 Digital Loop/4W DDITS Trunk Port - UNE Zone 2 | | 2 | UEPDC | | 110.95 | | | | | | | 19.99 | 19.99 | | |
| | 4W DS1 Digital Loop/4W DDITS Trunk Port - UNE Zone 3 | | 3 | UEPDC | | 134.14 | | | | | | | 19.99 | 19.99 | | |
| | UNE Loop Rates | | | | | | | | | | | | | | | |
| | 4-Wire DS1 Digital Loop - UNE Zone 1 | | 1 | UEPDC | USLDC | 57.53 | | | | | | | | | | |
| | 4-Wire DS1 Digital Loop - UNE Zone 2 | | 2 | UEPDC | USLDC | 75.40 | | | | | | | | | | |
| | 4-Wire DS1 Digital Loop - UNE Zone 3 | | 3 | UEPDC | USLDC | 98.59 | | | | | | | | | | |
| | UNE Port Rate | | | | | | | | | | | | | | | |
| | 4-Wire DDITS Digital Trunk Port (E:4/1/2004) | | | UEPDC | UDD1T | 35.55 | 342.80 | 257.87 | 61.41 | 48.49 | | | 19.99 | 19.99 | | |
| | NONRECURRING CHARGES - CURRENTLY COMBINED | | | | | | | | | | | | | | | |
| | 4-Wire DS1 Digital Loop / 4-Wire DDITS Trunk Port Combination - Switch-as-is (E:4/1/2004) | | | UEPDC | USAC4 | | 312.91 | 312.91 | | | | | 19.99 | 19.99 | | |
| | 4-Wire DS1 Digital Loop / 4-Wire DDITS Trunk Port Combination - Conversion with DS1 Changes (E:4/1/2004) | | | UEPDC | USAWA | | 312.91 | 312.91 | | | | | 19.99 | 19.99 | | |

| UNBUNDLED NETWORK ELEMENTS - Tennessee | | | | | | | | | | | | | | Attachment: 2 | | Exhibit: A | |
|---|---|---|---|---|---|---|---|---|---|---|---|---|---|---|---|---|---|
| CATEGORY | | RATE ELEMENTS | Interim | Zone | BCS | USOC | RATES ($) | | | | | Svc Order Submitted Elec per LSR | Svc Order Submitted Manually per LSR | Incremental Charge - Manual Svc Order vs. Electronic-1st | Incremental Charge - Manual Svc Order vs. Electronic-Add'l | Incremental Charge - Manual Svc Order vs. Electronic-Disc 1st | Incremental Charge - Manual Svc Order vs. Electronic-Disc Add'l |
| | | | | | | | Rec | Nonrecurring | | Nonrecurring Disconnect | | OSS Rates ($) | | | | | |
| | | | | | | | | First | Add'l | First | Add'l | SOMEC | SOMAN | SOMAN | SOMAN | SOMAN | SOMAN |
| | | 4-Wire DS1 Digital Loop / 4-Wire DDITS Trunk Port Combination - Conversion with Change - Trunk (E:4/1/2004) | | | UEPDC | USAWB | | 312.91 | 312.91 | | | | | 19.99 | 19.99 | | |
| | ADDITIONAL NRCs | | | | | | | | | | | | | | | | |
| | | 4-Wire DS1 Loop / 4-Wire DDITS Trunk Port - Subsequent Service Activity Per Service Order | | | UEPDC | USAS4 | | 94.88 | 94.88 | | | | | | | | |
| | | 4-Wire DS1 Loop / 4-Wire DDITS Trunk Port - NRC - Subsequent Channel Activation/Chan - 2-Way Trunk | | | UEPDC | UDTTA | | 108.67 | 108.67 | | | | | 19.99 | 19.99 | | |
| | | 4-Wire DS1 Loop / 4-Wire DDITS Trunk Port - Subsequent Channel Activation/Chan - 1-Way Outward Trunk | | | UEPDC | UDTTB | | 108.67 | 108.67 | | | | | 19.99 | 19.99 | | |
| | | 4-Wire DS1 Loop / 4-Wire DDITS Trunk Port - Subsqnt Channel Activation/Chan Inward Trunk w/out DID | | | UEPDC | UDTTC | | 108.67 | 108.67 | | | | | 19.99 | 19.99 | | |
| | | 4-Wire DS1 Loop / 4-Wire DDITS Trunk Port - Subsqnt Chan Activation Per Chan - Inward Trunk with DID | | | UEPDC | UDTTD | | 108.67 | 108.67 | | | | | 19.99 | 19.99 | | |
| | | 4-Wire DS1 Loop / 4-Wire DDITS Trunk Port - Subsqnt Chan Activation / Chan - 2-Way DID w User Trans | | | UEPDC | UDTTE | | 108.67 | 108.67 | | | | | 19.99 | 19.99 | | |
| | BIPOLAR 8 ZERO SUBSTITUTION | | | | | | | | | | | | | | | | |
| | | B8ZS -Superframe Format | | | UEPDC | CCOSF | | 0.00i | 590.00s | | | | | 19.99 | 19.99 | | |
| | | B8ZS - Extended Superframe Format | | | UEPDC | CCOEF | | 0.00i | 590.00s | | | | | 19.99 | 19.99 | | |
| | Alternate Mark Inversion | | | | | | | | | | | | | | | | |
| | | AMI -Superframe Format | | | UEPDC | MCOSF | | 0.00 | 0.00 | | | | | | | | |
| | | AMI - Extended SuperFrame Format | | | UEPDC | MCOPO | | 0.00 | 0.00 | | | | | | | | |
| | Telephone Number/Trunk Group Establisment Charges | | | | | | | | | | | | | | | | |
| | | Telephone Number for 2-Way Trunk Group | | | UEPDC | UDTGX | 0.00 | | | | | | | 19.99 | 19.99 | | |
| | | Telephone Number for 1-Way Outward Trunk Group | | | UEPDC | UDTGY | 0.00 | | | | | | | 19.99 | 19.99 | | |
| | | Telephone Number for 1-Way Inward Trunk Group Without DID | | | UEPDC | UDTGZ | 0.00 | | | | | | | 19.99 | 19.99 | | |
| | | DID Numbers for each Group of 20 DID Numbers | | | UEPDC | ND4 | 0.00 | | | | | | | 19.99 | 19.99 | | |
| | | DID Numbers, Non- consecutive DID Numbers , Per Number | | | UEPDC | ND5 | 0.00 | | | | | | | 19.99 | 19.99 | | |
| | | Reserve Non-Consecutive DID Nos. | | | UEPDC | ND6 | 0.00 | 0.00 | 0.00 | | | | | | | | |
| | | Reserve DID Numbers | | | UEPDC | NDV | 0.00 | 0.00 | 0.00 | | | | | | | | |
| | Dedicated DS1 (Interoffice Channel Mileage) - FX/FCO for 4-Wire DS1 Digital Loop with 4-Wire DDITS Trunk Port | | | | | | | | | | | | | | | | |
| | | Interoffice Channel Mileage - Fixed rate 0-8 miles (Facilities Termination) | | | UEPDC | 1LNO1 | 75.83 | 145.98 | 109.85 | 19.66 | 14.99 | | | | | | |
| | | Interoffice Channel Mileage - Additional rate per mile - 0-8 miles | | | UEPDC | 1LNOA | 0.3525 | 0.00 | 0.00 | | | | | | | | |
| | | Interoffice Channel Mileage - Fixed rate 9-25 miles (Facilities Termination) | | | UEPDC | 1LNO2 | 0.00 | 0.00 | 0.00 | | | | | | | | |
| | | Interoffice Channel Mileage - Additional rate per mile - 9-25 miles | | | UEPDC | 1LNOB | 0.3525 | 0.00 | 0.00 | | | | | | | | |
| | | Interoffice Channel Mileage - Fixed rate 25+ miles (Facilities Termination) | | | UEPDC | 1LNO3 | 0.00 | 0.00 | 0.00 | | | | | | | | |
| | | Interoffice Channel Mileage - Additional rate per mile - 25+ miles | | | UEPDC | 1LNOC | 0.3525 | 0.00 | 0.00 | | | | | | | | |
| | | Local Number Portability, per DS0 Activated | | | UEPDC | LNPCP | 3.15 | 0.00 | 0.00 | | | | | | | | |
| | | Central Office Termininating Point | | | UEPDC | CTG | 0.00 | | | | | | | | | | |
| | 4-WIRE DS1 LOOP WITH CHANNELIZATION WITH PORT | | | | | | | | | | | | | | | | |
| | System is 1 DS1 Loop, 1 D4 Channel Bank, and up to 24 Feature Activations | | | | | | | | | | | | | | | | |
| | Each System can have up to 24 combinations of rates depending on type and number of ports used | | | | | | | | | | | | | | | | |
| | The UNE-P DS1 combination rates below for 4-Wire DS1 Loop with Channelization with Port in this rate exhibit apply to the embedded base in place as of 10/2/03 until 4/1/04. After 4/1/04 these rates shall revert to tariff rates or a separate agreement. | | | | | | | | | | | | | | | | |
| | Requests for 4-Wire DS1 Loop with Channelization with Port after the effective date of this amendment shall be provided pursuant to a separate agreement or tariff at BellSouth's discretion. | | | | | | | | | | | | | | | | |
| | UNE DS1 Loop | | | | | | | | | | | | | | | | |
| | | 4-Wire DS1 Loop - UNE Zone 1 | | 1 | UEPMG | USLDC | 57.73 | 0.00 | 0.00 | | | | | | | | |
| | | 4-Wire DS1 Loop - UNE Zone 2 | | 2 | UEPMG | USLDC | 75.40 | 0.00 | 0.00 | | | | | | | | |
| | | 4-Wire DS1 Loop - UNE Zone 3 | | 3 | UEPMG | USLDC | 98.59 | 0.00 | 0.00 | | | | | | | | |
| | UNE DSO Channelization Capacities (D4 Channel Bank Configurations) | | | | | | | | | | | | | | | | |
| | | 24 DSO Channel Capacity - 1 per DS1 | | | UEPMG | VUM24 | 131.87 | 0.00 | 0.00 | | | | | 19.99 | 19.99 | | |
| | | 48 DSO Channel Capacity - 1 per 2 DS1s | | | UEPMG | VUM48 | 263.74 | 0.00 | 0.00 | | | | | 19.99 | 19.99 | | |
| | | 96 DSO Channel Capacity -1per 4 DS1s | | | UEPMG | VUM96 | 527.48 | 0.00 | 0.00 | | | | | 19.99 | 19.99 | | |
| | | 144 DS0 Channel Capacity - 1 per 6 DS1s | | | UEPMG | VUM14 | 791.42 | 0.00 | 0.00 | | | | | 19.99 | 19.99 | | |
| | | 192 DS0 Channel Capacity -1 per 8 DS1s | | | UEPMG | VUM19 | 827.76 | 0.00 | 0.00 | | | | | 19.99 | 19.99 | | |

| UNBUNDLED NETWORK ELEMENTS - Tennessee | | | | | | | | | | | | | | Attachment: 2 | | Exhibit: A | |
|---|---|---|---|---|---|---|---|---|---|---|---|---|---|---|---|---|---|
| CATEGORY | RATE ELEMENTS | Interim | Zone | BCS | USOC | RATES ($) | | | | | Svc Order Submitted Elec per LSR | Svc Order Submitted Manually per LSR | Incremental Charge - Manual Svc Order vs. Electronic-1st | Incremental Charge - Manual Svc Order vs. Electronic-Add'l | Incremental Charge - Manual Svc Order vs. Electronic-Disc 1st | Incremental Charge - Manual Svc Order vs. Electronic-Disc Add'l |
| | | | | | | Rec | Nonrecurring First | Nonrecurring Add'l | Nonrecurring Disconnect First | Nonrecurring Disconnect Add'l | OSS Rates ($) SOMEC | SOMAN | SOMAN | SOMAN | SOMAN | SOMAN |
| | 240 DS0 Channel Capacity - 1 per 10 DS1s | | | UEPMG | VUM2O | 1,318.70 | 0.00 | 0.00 | | | | | 19.99 | 19.99 | | |
| | 288 DS0 Channel Capacity - 1 per 12 DS1s | | | UEPMG | VUM28 | 1,582.44 | 0.00 | 0.00 | | | | | 19.99 | 19.99 | | |
| | 384 DS0 Channel Capacity - 1 per 16 DS1s | | | UEPMG | VUM38 | 2,109.92 | 0.00 | 0.00 | | | | | 19.99 | 19.99 | | |
| | 480 DS0 Channel Capacity - 1 per 20 DS1s | | | UEPMG | VUM4O | 2,637.40 | 0.00 | 0.00 | | | | | 19.99 | 19.99 | | |
| | 576 DS0 Channel Capacity -1 per 24 DS1s | | | UEPMG | VUM57 | 3,164.88 | 0.00 | 0.00 | | | | | 19.99 | 19.99 | | |
| | 672 DS0 Channel Capacity - 1 per 28 DS1s | | | UEPMG | VUM67 | 3,692.36 | 0.00 | 0.00 | | | | | 19.99 | 19.99 | | |
| | **Non-Recurring Charges (NRC) Associated with 4-Wire DS1 Loop with Channeliztion with Port - Conversion Charge Based on a System** | | | | | | | | | | | | | | | |
| | **A Minimum System configuration is One (1) DS1, One (1) D4 Channel Bank, and Up To 24 DSO Ports with Feature Activations.** | | | | | | | | | | | | | | | |
| | **Multiples of this configuration functioning as one are considered Add'l after the minimum system configuration is counted.** | | | | | | | | | | | | | | | |
| | NRC - Conversion (Currently Combined) with or without BellSouth Allowed Changes | | | UEPMG | USAC4 | 0.00 | 303.61 | 15.74 | | | | | 19.99 | 19.99 | | |
| | **System Additions at End User Locations Where 4-Wire DS1 Loop with Channelization with Port Combination Currently Exists and** | | | | | | | | | | | | | | | |
| | **New (Not Currently Combined) in all states, except in Density Zone 1 of Top 8 MSA's** | | | | | | | | | | | | | | | |
| | 1 DS1/D4 Channel Bank - Additionally Add NRC for each Port and Assoc Fea Activation (E:4/1/2004) | | | UEPMG | VUMD4 | 0.00 | 704.68 | 441.48 | 138.36 | 16.41 | | | 19.99 | | | |
| | **Bipolar 8 Zero Substitution** | | | | | | | | | | | | | | | |
| | Clear Channel Capability Format, superframe - Subsequent Activity Only | | | UEPMG | CCOSF | 0.00 | 0.00i | 590.00s | | | | | | | | |
| | Clear Channel Capability Format - Extended Superframe - Subsequent Activity Only | | | UEPMG | CCOEF | 0.00 | 0.00i | 590.00s | | | | | | | | |
| | **Alternate Mark Inversion (AMI)** | | | | | | | | | | | | | | | |
| | Superframe Format | | | UEPMG | MCOSF | 0.00 | 0.00 | 0.00 | | | | | | | | |
| | Extended Superframe Format | | | UEPMG | MCOPO | 0.00 | 0.00 | 0.00 | | | | | | | | |
| | **Exchange Ports Associated with 4-Wire DS1 Loop with Channelization with Port** | | | | | | | | | | | | | | | |
| | **Exchange Ports** | | | | | | | | | | | | | | | |
| | Line Side Combination Channelized PBX Trunk Port - Business (E:4/1/2004) | | | UEPPX | UEPCX | 1.70 | 0.00 | 0.00 | 0.00 | 0.00 | | | 30.89 | 7.03 | | |
| | Line Side Outward Channelized PBX Trunk Port - Business (E:4/1/2004) | | | UEPPX | UEPOX | 1.70 | 0.00 | 0.00 | 0.00 | 0.00 | | | 30.89 | 7.03 | | |
| | Line Side Inward Only Channelized PBX Trunk Port without DID (E:4/1/2004) | | | UEPPX | UEP1X | 1.70 | 0.00 | 0.00 | 0.00 | 0.00 | | | 30.89 | 7.03 | | |
| | 2-Wire Trunk Side Unbundled Channelized DID Trunk Port (E:4/1/2004) | | | UEPPX | UEPDM | 8.97 | 0.00 | 0.00 | 0.00 | 0.00 | | | 30.89 | 7.03 | | |
| | Unbundled Exchange Ports, 2-Wire Channelized – Outdial – (AL, KY, LA, MS, & TN)(Conversion from Network Access Service) (E:4/1/2004) | | | UEPPX | UEPCY | 1.70 | 0.00 | 0.00 | 0.00 | 0.00 | | | 30.89 | 7.03 | | |
| | Unbundled Exchange Ports, 2-Wire Channelized – Combination (AL, KY, LA, MS, & TN) (Conversion from Network Access Service) (E:4/1/2004) | | | UEPPX | UEPCT | 1.70 | 0.00 | 0.00 | 0.00 | 0.00 | | | 30.89 | 7.03 | | |
| | Unbundled Exchange Ports, 2-Wire Channelized – Outdial – Tennessee Only – Calling Plan - Regionserv (E:4/1/2004) | | | UEPPX | UEPCZ | 1.70 | 0.00 | 0.00 | 0.00 | 0.00 | | | 30.89 | 7.03 | | |
| | Unbundled Exchange Ports, 2-Wire Channelized – Two Way - Tennessee Only – Calling Plan - Regionserv (E:4/1/2004) | | | UEPPX | UEPC6 | 1.70 | 0.00 | 0.00 | 0.00 | 0.00 | | | 30.89 | 7.03 | | |
| | **Feature Activations - Unbundled Loop Concentration** | | | | | | | | | | | | | | | |
| | Feature (Service) Activation for each Line Port Terminated in D4 Bank (includes Q.1.4, P50.1, P.50.498) | | | UEPPX | 1PQWM | 2.02 | 23.94 | 12.64 | 3.82 | 3.80 | | | 30.89 | 7.03 | | |
| | Feature (Service) Activation for each Trunk Port Terminated in D4 Bank (includes Q.1.4, P50.1, P.50.498) | | | UEPPX | 1PQWU | 2.02 | 73.67 | 17.37 | 54.09 | 10.57 | | | 30.89 | 7.03 | | |
| | **Telephone Number/ Group Establishment Charges for DID Service** | | | | | | | | | | | | | | | |
| | DID Trunk Termination (1 per Port) | | | UEPPX | NDT | 0.00 | 0.00 | 0.00 | | | | | | | | |
| | DID Numbers - groups of 20 - Valid all States | | | UEPPX | ND4 | 0.00 | 0.00 | 0.00 | | | | | | | | |
| | Non-Consecutive DID Numbers - per number | | | UEPPX | ND5 | 0.00 | 0.00 | 0.00 | | | | | | | | |
| | Reserve Non-Consecutive DID Numbers | | | UEPPX | ND6 | 0.00 | 0.00 | 0.00 | | | | | | | | |
| | Reserve DID Numbers | | | UEPPX | NDV | 0.00 | 0.00 | 0.00 | | | | | | | | |
| | **Local Number Portability** | | | | | | | | | | | | | | | |
| | Local Number Portability - 1 per port | | | UEPPX | LNPCP | 3.15 | 0.00 | 0.00 | | | | | | | | |
| | **FEATURES - Vertical and Optional** | | | | | | | | | | | | | | | |
| | **Local Switching Features Offered with Line Side Ports Only** | | | | | | | | | | | | | | | |
| | All Features Available | | | UEPPX | UEPVF | 0.00 | 0.00 | 0.00 | | | | | | | | |

| UNBUNDLED NETWORK ELEMENTS - Tennessee | | | | | | | | | | | | | | Attachment: 2 | | Exhibit: A | |
|---|---|---|---|---|---|---|---|---|---|---|---|---|---|---|---|---|---|
| CATEGORY | RATE ELEMENTS | Interim | Zone | BCS | USOC | RATES ($) | | | | | Svc Order Submitted Elec per LSR | Svc Order Submitted Manually per LSR | Incremental Charge - Manual Svc Order vs. Electronic-1st | Incremental Charge - Manual Svc Order vs. Electronic-Add'l | Incremental Charge - Manual Svc Order vs. Electronic-Disc 1st | Incremental Charge - Manual Svc Order vs. Electronic-Disc Add'l |
| | | | | | | Rec | Nonrecurring First | Nonrecurring Add'l | Nonrecurring Disconnect First | Nonrecurring Disconnect Add'l | OSS Rates ($) SOMEC | OSS Rates ($) SOMAN | OSS Rates ($) SOMAN | OSS Rates ($) SOMAN | OSS Rates ($) SOMAN | OSS Rates ($) SOMAN |
| UNBUNDLED CENTREX PORT/LOOP COMBINATIONS - COST BASED RATES | | | | | | | | | | | | | | | | | |
| | 1. Cost Based Rates are applied where BellSouth is required by FCC and/or State Commission rule to provide Unbundled Local Switching or Switch Ports. | | | | | | | | | | | | | | | | |
| | 2. Features shall apply to the Unbundled Port/Loop Combination - Cost Based Rate section in the same manner as they are applied to the Stand-Alone Unbundled Port section of this Rate Exhibit. | | | | | | | | | | | | | | | | |
| | 3. End Office and Tandem Switching Usage and Common Transport Usage rates in the Port section of this rate exhibit shall apply to all combinations of loop/port network elements except for UNE Coin Port/Loop Combinations. | | | | | | | | | | | | | | | | |
| | 4. The first and additional Port nonrecurring charges apply to Not Currently Combined Combos. For Currently Combined Combos, the nonrecurring charges shall be those identified in the Nonrecurring - Currently Combined sections. Additional NRCs may apply also and are categorized accordingly. | | | | | | | | | | | | | | | | |
| | 5. Market Rates for Unbundled Centrex Port/Loop Combination will be negotiated on an Individual Case Basis, until further notice. | | | | | | | | | | | | | | | | |
| | UNE-P CENTREX - 1AESS - (Valid in AL,FL,GA,KY,LA,MS,&TN only) | | | | | | | | | | | | | | | | |
| | 2-Wire VG Loop/2-Wire Voice Grade Port (Centrex) Combo | | | | | | | | | | | | | | | | |
| | UNE Port/Loop Combination Rates (Non-Design) | | | | | | | | | | | | | | | | |
| | 2-Wire VG Loop/2-Wire Voice Grade Port (Centrex) Port Combo - Non-Design | | 1 | UEP91 | | 14.18 | | | | | | | | | | | |
| | 2-Wire VG Loop/2-Wire Voice Grade Port (Centrex)Port Combo - Non-Design | | 2 | UEP91 | | 18.01 | | | | | | | | | | | |
| | 2-Wire VG Loop/2-Wire Voice Grade Port (Centrex)Port Combo - Non-Design | | 3 | UEP91 | | 23.02 | | | | | | | | | | | |
| | UNE Port/Loop Combination Rates (Design) | | | | | | | | | | | | | | | | |
| | 2-Wire VG Loop/2-Wire Voice Grade Port (Centrex) Port Combo - Design | | 1 | UEP91 | | 18.26 | | | | | | | | | | | |
| | 2-Wire VG Loop/2-Wire Voice Grade Port (Centrex)Port Combo - Design | | 2 | UEP91 | | 23.33 | | | | | | | | | | | |
| | 2-Wire VG Loop/2-Wire Voice Grade Port (Centrex)Port Combo - Design | | 3 | UEP91 | | 29.98 | | | | | | | | | | | |
| | UNE Loop Rate | | | | | | | | | | | | | | | | |
| | 2-Wire Voice Grade Loop (SL 1) - Zone 1 | | 1 | UEP91 | UECS1 | 12.48 | | | | | | | | | | | |
| | 2-Wire Voice Grade Loop (SL 1) - Zone 2 | | 2 | UEP91 | UECS1 | 16.31 | | | | | | | | | | | |
| | 2-Wire Voice Grade Loop (SL 1) - Zone 3 | | 3 | UEP91 | UECS1 | 21.32 | | | | | | | | | | | |
| | 2-Wire Voice Grade Loop (SL 2) - Zone 1 | | 1 | UEP91 | UECS2 | 16.56 | | | | | | | | | | | |
| | 2-Wire Voice Grade Loop (SL 2) - Zone 2 | | 2 | UEP91 | UECS2 | 21.63 | | | | | | | | | | | |
| | 2-Wire Voice Grade Loop (SL 2) - Zone 3 | | 3 | UEP91 | UECS2 | 28.28 | | | | | | | | | | | |
| | UNE Ports | | | | | | | | | | | | | | | | |
| | All States (Except North Carolina and Sout Carolina) | | | | | | | | | | | | | | | | |
| | 2-Wire Voice Grade Port (Centrex ) Basic Local Area | | | UEP91 | UEPYA | 1.70 | 22.14 | 15.25 | 8.45 | 3.91 | | 30.89 | 7.03 | | | | |
| | 2-Wire Voice Grade Port (Centrex 800 termination)Basic Local Area | | | UEP91 | UEPYB | 1.70 | 22.14 | 15.25 | 8.45 | 3.91 | | 30.89 | 7.03 | | | | |
| | 2-Wire Voice Grade Port (Centrex with Caller ID)Note1 Basic Local Area | | | UEP91 | UEPYH | 1.70 | 22.14 | 15.25 | 8.45 | 3.91 | | 30.89 | 7.03 | | | | |
| | 2-Wire Voice Grade Port (Centrex from diff Serving Wire Center) Note 2, 3 Basic Local Area | | | UEP91 | UEPYM | 1.70 | 22.14 | 15.25 | 8.45 | 3.91 | | 30.89 | 7.03 | | | | |
| | 2-Wire Voice Grade Port, Diff Serving Wire Center - 800 Service Term - Basic Local Area | | | UEP91 | UEPYZ | 1.70 | 22.14 | 15.25 | 8.45 | 3.91 | | 30.89 | 7.03 | | | | |
| | 2-Wire Voice Grade Port terminated in on Megalink or equivalent - Basic Local Area | | | UEP91 | UEPY9 | 1.70 | 22.14 | 15.25 | 8.45 | 3.91 | | 30.89 | 7.03 | | | | |
| | 2-Wire Voice Grade Port Terminated on 800 Service Term - Basic Local Area | | | UEP91 | UEPY2 | 1.70 | 22.14 | 15.25 | 8.45 | 3.91 | | 30.89 | 7.03 | | | | |
| | AL, KY, LA, MS, & TN Only | | | | | | | | | | | | | | | | |
| | 2-Wire Voice Grade Port (Centrex ) | | | UEP91 | UEPQA | 1.70 | 22.14 | 15.25 | 8.45 | 3.91 | | 30.89 | 7.03 | | | | |
| | 2-Wire Voice Grade Port (Centrex 800 termination) | | | UEP91 | UEPQB | 1.70 | 22.14 | 15.25 | 8.45 | 3.91 | | 30.89 | 7.03 | | | | |
| | 2-Wire Voice Grade Port (Centrex with Caller ID)1 | | | UEP91 | UEPQH | 1.70 | 22.14 | 15.25 | 8.45 | 3.91 | | 30.89 | 7.03 | | | | |
| | 2-Wire Voice Grade Port (Centrex from diff Serving Wire Center)2,3 | | | UEP91 | UEPQM | 1.70 | 22.14 | 15.25 | 8.45 | 3.91 | | 30.89 | 7.03 | | | | |
| | 2-Wire Voice Grade Port, Diff Serving Wire Center - 2,3 - 800 Service Term | | | UEP91 | UEPQZ | 1.70 | 22.14 | 15.25 | 8.45 | 3.91 | | 30.89 | 7.03 | | | | |
| | 2-Wire Voice Grade Port terminated in on Megalink or equivalent | | | UEP91 | UEPQ9 | 1.70 | 22.14 | 15.25 | 8.45 | 3.91 | | 30.89 | 7.03 | | | | |
| | 2-Wire Voice Grade Port Terminated on 800 Service Term | | | UEP91 | UEPQ2 | 1.70 | 22.14 | 15.25 | 8.45 | 3.91 | | 30.89 | 7.03 | | | | |
| | Local Switching | | | | | | | | | | | | | | | | |
| | Centrex Intercom Funtionality, per port | | | UEP91 | URECS | 0.6381 | | | | | | | | | | | |
| | Local Number Portability | | | | | | | | | | | | | | | | |

CCCS 464 of 1253

## UNBUNDLED NETWORK ELEMENTS - Tennessee

| CATEGORY | RATE ELEMENTS | Interim | Zone | BCS | USOC | RATES ($) | | | | | Svc Order Submitted Elec per LSR | Svc Order Submitted Manually per LSR | Attachment: 2 Incremental Charge - Manual Svc Order vs. Electronic- 1st | Attachment: 2 Incremental Charge - Manual Svc Order vs. Electronic- Add'l | Exhibit: A Incremental Charge - Manual Svc Order vs. Electronic- Disc 1st | Exhibit: A Incremental Charge - Manual Svc Order vs. Electronic- Disc Add'l |
|---|---|---|---|---|---|---|---|---|---|---|---|---|---|---|---|---|
| | | | | | | Rec | Nonrecurring | | Nonrecurring Disconnect | | OSS Rates ($) | | | | | |
| | | | | | | | First | Add'l | First | Add'l | SOMEC | SOMAN | SOMAN | SOMAN | SOMAN | SOMAN |
| | Local Number Portability (1 per port) | | | UEP91 | LNPCC | 0.35 | | | | | | | | | | |
| **Features** | | | | | | | | | | | | | | | | |
| | All Standard Features Offered, per port | | | UEP91 | UEPVF | 0.00 | | | | | | 30.89 | 7.03 | | | |
| | All Select Features Offered, per port | | | UEP91 | UEPVS | 0.00 | 433.78 | | | | | 30.89 | 7.03 | | | |
| | All Centrex Control Features Offered, per port | | | UEP91 | UEPVC | 0.00 | | | | | | 30.89 | 7.03 | | | |
| **NARS** | | | | | | | | | | | | | | | | |
| | Unbundled Network Access Register - Combination | | | UEP91 | UARCX | 0.00 | 0.00 | 0.00 | 0.00 | 0.00 | | 0.00 | 7.03 | | | |
| | Unbundled Network Access Register - Indial | | | UEP91 | UAR1X | 0.00 | 0.00 | 0.00 | 0.00 | 0.00 | | 0.00 | 7.03 | | | |
| | Unbundled Network Access Register - Outdial | | | UEP91 | UAROX | 0.00 | 0.00 | 0.00 | 0.00 | 0.00 | | 0.00 | 7.03 | | | |
| **Miscellaneous Terminations** | | | | | | | | | | | | | | | | |
| **2-Wire Trunk Side** | | | | | | | | | | | | | | | | |
| | Trunk Side Terminations, each | | | UEP91 | CENA6 | 8.78 | 22.14 | 15.25 | 8.45 | 3.91 | | 30.89 | 7.03 | | | |
| **Interoffice Channel Mileage - 2-Wire** | | | | | | | | | | | | | | | | |
| | Interoffice Channel Facilities Termination - Voice Grade | | | UEP91 | M1GBC | 18.58 | 22.14 | 15.25 | 8.45 | 3.91 | | 30.89 | 7.03 | | | |
| | Interoffice Channel mileage, per mile or fraction of mile | | | UEP91 | M1GBM | 0.0174 | | | | | | | | | | |
| **Feature Activations (DS0) Centrex Loops on Channelized DS1 Service** | | | | | | | | | | | | | | | | |
| **D4 Channel Bank Feature Activations** | | | | | | | | | | | | | | | | |
| | Feature Activation on D-4 Channel Bank Centrex Loop Slot | | | UEP91 | 1PQWS | 0.66 | | | | | | | | | | |
| | Feature Activation on D-4 Channel Bank FX line Side Loop Slot | | | UEP91 | 1PQW6 | 0.66 | | | | | | | | | | |
| | Feature Activation on D-4 Channel Bank FX Trunk Side Loop Slot | | | UEP91 | 1PQW7 | 0.66 | | | | | | | | | | |
| | Feature Activation on D-4 Channel Bank Centrex Loop Slot - Different Wire Center | | | UEP91 | 1PQWP | 0.66 | | | | | | | | | | |
| | Feature Activation on D-4 Channel Bank Private Line Loop Slot | | | UEP91 | 1PQWV | 0.66 | | | | | | | | | | |
| | Feature Activation on D-4 Channel Bank Tjie Line/Trunk Loop Slot | | | UEP91 | 1PQWQ | 0.66 | | | | | | | | | | |
| | Feature Activation on D-4 Channel Bank WATS Loop Slot | | | UEP91 | 1PQWA | 0.66 | | | | | | | | | | |
| **Non-Recurring Charges (NRC) Associated with UNE-P Centrex** | | | | | | | | | | | | | | | | |
| | Conversion - Currently Combined Switch-As-Is with allowed changes, per port | | | UEP91 | USAC2 | | 1.03 | 0.29 | | | | 30.89 | 7.03 | | | |
| | New Centrex Standard Common Block | | | UEP91 | M1ACS | 0.00 | 658.60 | | | | | 30.89 | 7.03 | | | |
| | New Centrex Customized Common Block | | | UEP91 | M1ACC | 0.00 | 658.60 | | | | | 30.89 | 7.03 | | | |
| | Secondary Block, per Block | | | UEP91 | M2CC1 | 0.00 | 73.55 | | | | | 30.89 | 7.03 | | | |
| | NAR Establishment Charge, Per Occasion | | | UEP91 | URECA | | 68.57 | | | | | 30.89 | 7.03 | | | |
| **Additional Non-Recurring Charges (NRC)** | | | | | | | | | | | | | | | | |
| | Unbundled Miscellaneous Rate Element, Tag Loop at End Use Premise | | | UEP91 | URETL | | 8.33 | 0.83 | | | | | | | | |
| | Unbundled Miscellaneous Rate Element, Tag Design Loop at End Use Premise | | | UEP91 | URETN | | 11.23 | 1.10 | | | | | | | | |
| **UNE-P CENTREX - 5ESS (Valid in All States)** | | | | | | | | | | | | | | | | |
| **2-Wire VG Loop/2-Wire Voice Grade Port (Centrex) Combo** | | | | | | | | | | | | | | | | |
| **UNE Port/Loop Combination Rates (Non-Design)** | | | | | | | | | | | | | | | | |
| | 2-Wire VG Loop/2-Wire Voice Grade Port (Centrex) Port Combo - Non-Design | | 1 | UEP95 | | 14.18 | | | | | | | | | | |
| | 2-Wire VG Loop/2-Wire Voice Grade Port (Centrex)Port Combo - Non-Design | | 2 | UEP95 | | 18.01 | | | | | | | | | | |
| | 2-Wire VG Loop/2-Wire Voice Grade Port (Centrex)Port Combo - Non-Design | | 3 | UEP95 | | 23.02 | | | | | | | | | | |
| **UNE Port/Loop Combination Rates (Design)** | | | | | | | | | | | | | | | | |
| | 2-Wire VG Loop/2-Wire Voice Grade Port (Centrex) Port Combo - Design | | 1 | UEP95 | | 18.26 | | | | | | | | | | |
| | 2-Wire VG Loop/2-Wire Voice Grade Port (Centrex)Port Combo - Design | | 2 | UEP95 | | 23.33 | | | | | | | | | | |
| | 2-Wire VG Loop/2-Wire Voice Grade Port (Centrex)Port Combo - Design | | 3 | UEP95 | | 29.98 | | | | | | | | | | |
| **UNE Loop Rate** | | | | | | | | | | | | | | | | |
| | 2-Wire Voice Grade Loop (SL 1) - Zone 1 | | 1 | UEP95 | UECS1 | 12.48 | | | | | | | | | | |

| UNBUNDLED NETWORK ELEMENTS - Tennessee | | | | | | | | | | | | | | Attachment: 2 | | Exhibit: A | |
|---|---|---|---|---|---|---|---|---|---|---|---|---|---|---|---|---|---|
| CATEGORY | | RATE ELEMENTS | Interim | Zone | BCS | USOC | RATES ($) | | | | | Svc Order Submitted Elec per LSR | Svc Order Submitted Manually per LSR | Incremental Charge - Manual Svc Order vs. Electronic-1st | Incremental Charge - Manual Svc Order vs. Electronic-Add'l | Incremental Charge - Manual Svc Order vs. Electronic-Disc 1st | Incremental Charge - Manual Svc Order vs. Electronic-Disc Add'l |
| | | | | | | | Rec | Nonrecurring | | Nonrecurring Disconnect | | OSS Rates ($) | | | | | |
| | | | | | | | | First | Add'l | First | Add'l | SOMEC | SOMAN | SOMAN | SOMAN | SOMAN | SOMAN |
| | | 2-Wire Voice Grade Loop (SL 1) - Zone 2 | | 2 | UEP95 | UECS1 | 16.31 | | | | | | | | | | |
| | | 2-Wire Voice Grade Loop (SL 1) - Zone 3 | | 3 | UEP95 | UECS1 | 21.32 | | | | | | | | | | |
| | | 2-Wire Voice Grade Loop (SL 2) - Zone 1 | | 1 | UEP95 | UECS2 | 16.56 | | | | | | | | | | |
| | | 2-Wire Voice Grade Loop (SL 2) - Zone 2 | | 2 | UEP95 | UECS2 | 21.63 | | | | | | | | | | |
| | | 2-Wire Voice Grade Loop (SL 2) - Zone 3 | | 3 | UEP95 | UECS2 | 28.28 | | | | | | | | | | |
| | **UNE Port Rate** | | | | | | | | | | | | | | | | |
| | **All States** | | | | | | | | | | | | | | | | |
| | | 2-Wire Voice Grade Port (Centrex ) Basic Local Area | | | UEP95 | UEPYA | 1.70 | 22.14 | 15.25 | 8.45 | 3.91 | | 30.89 | 7.03 | | | |
| | | 2-Wire Voice Grade Port (Centrex 800 termination) | | | UEP95 | UEPYB | 1.70 | 22.14 | 15.25 | 8.45 | 3.91 | | 30.89 | 7.03 | | | |
| | | 2-Wire Voice Grade Port (Centrex with Caller ID)1Basic Local Area | | | UEP95 | UEPYH | 1.70 | 22.14 | 15.25 | 8.45 | 3.91 | | 30.89 | 7.03 | | | |
| | | 2-Wire Voice Grade Port (Centrex from diff Serving Wire Center)2,3 Basic Local Area | | | UEP95 | UEPYM | 1.70 | 22.14 | 15.25 | 8.45 | 3.91 | | 30.89 | 7.03 | | | |
| | | 2-Wire Voice Grade Port, Diff Serving Wire Center 2,3 - 800 Service Term - Basic Local Area | | | UEP95 | UEPYZ | 1.70 | 22.14 | 15.25 | 8.45 | 3.91 | | 30.89 | 7.03 | | | |
| | | 2-Wire Voice Grade Port terminated in on Megalink or equivalent - Basic Local Area | | | UEP95 | UEPY9 | 1.70 | 22.14 | 15.25 | 8.45 | 3.91 | | 30.89 | 7.03 | | | |
| | | 2-Wire Voice Grade Port Terminated on 800 Service Term - Basic Local Area | | | UEP95 | UEPY2 | 1.70 | 22.14 | 15.25 | 8.45 | 3.91 | | 30.89 | 7.03 | | | |
| | **AL, KY, LA, MS, SC, & TN Only** | | | | | | | | | | | | | | | | |
| | | 2-Wire Voice Grade Port (Centrex ) | | | UEP95 | UEPQA | 1.70 | 22.14 | 15.25 | 8.45 | 3.91 | | 30.89 | 7.03 | | | |
| | | 2-Wire Voice Grade Port (Centrex 800 termination) | | | UEP95 | UEPQB | 1.70 | 22.14 | 15.25 | 8.45 | 3.91 | | 30.89 | 7.03 | | | |
| | | 2-Wire Voice Grade Port (Centrex with Caller ID)1 | | | UEP95 | UEPQH | 1.70 | 22.14 | 15.25 | 8.45 | 3.91 | | 30.89 | 7.03 | | | |
| | | 2-Wire Voice Grade Port (Centrex from diff Serving Wire Center)2,3 | | | UEP95 | UEPQM | 1.70 | 22.14 | 15.25 | 8.45 | 3.91 | | 30.89 | 7.03 | | | |
| | | 2-Wire Voice Grade Port, Diff Serving Wire Center - 800 Service Term 2,3 | | | UEP95 | UEPQZ | 1.70 | 22.14 | 15.25 | 8.45 | 3.91 | | 30.89 | 7.03 | | | |
| | | 2-Wire Voice Grade Port terminated in on Megalink or equivalent | | | UEP95 | UEPQ9 | 1.70 | 22.14 | 15.25 | 8.45 | 3.91 | | 30.89 | 7.03 | | | |
| | | 2-Wire Voice Grade Port Terminated on 800 Service Term | | | UEP95 | UEPQ2 | 1.70 | 22.14 | 15.25 | 8.45 | 3.91 | | 30.89 | 7.03 | | | |
| | **FL & GA Only** | | | | | | | | | | | | | | | | |
| | **Local Switching** | | | | | | | | | | | | | | | | |
| | | Centrex Intercom Funtionality, per port | | | UEP95 | URECS | 0.6381 | | | | | | | | | | |
| | **Local Number Portability** | | | | | | | | | | | | | | | | |
| | | Local Number Portability (1 per port) | | | UEP95 | LNPCC | 0.35 | | | | | | | | | | |
| | **Features** | | | | | | | | | | | | | | | | |
| | | All Standard Features Offered, per port | | | UEP95 | UEPVF | 0.00 | | | | | | 30.89 | 7.03 | | | |
| | | All Select Features Offered, per port | | | UEP95 | UEPVS | 0.00 | 433.78 | | | | | 30.89 | 7.03 | | | |
| | | All Centrex Control Features Offered, per port | | | UEP95 | UEPVC | 0.00 | | | | | | 30.89 | 7.03 | | | |
| | **NARS** | | | | | | | | | | | | | | | | |
| | | Unbundled Network Access Register - Combination | | | UEP95 | UARCX | 0.00 | 0.00 | 0.00 | 0.00 | 0.00 | | 0.00 | 7.03 | | | |
| | | Unbundled Network Access Register - Indial | | | UEP95 | UAR1X | 0.00 | 0.00 | 0.00 | 0.00 | 0.00 | | 0.00 | 7.03 | | | |
| | | Unbundled Network Access Register - Outdial | | | UEP95 | UAROX | 0.00 | 0.00 | 0.00 | 0.00 | 0.00 | | 0.00 | 7.03 | | | |
| | **Miscellaneous Terminations** | | | | | | | | | | | | | | | | |
| | **2-Wire Trunk Side** | | | | | | | | | | | | | | | | |
| | | Trunk Side Terminations, each | | | UEP95 | CEND6 | 8.78 | 47.75 | 47.01 | 9.21 | 8.47 | | 30.89 | 7.03 | | | |
| | **4-Wire Digital (1.544 Megabits)** | | | | | | | | | | | | | | | | |
| | | DS1 Circuit Terminations, each | | | UEP95 | M1HD1 | 35.55 | 75.93 | 38.15 | | | | 30.89 | 7.03 | | | |
| | | DS0 Channels Activated, each | | | UEP95 | M1HDO | 0.00 | 108.67 | | | | | 30.89 | 7.03 | | | |
| | **Interoffice Channel Mileage - 2-Wire** | | | | | | | | | | | | | | | | |
| | | Interoffice Channel Facilities Termination | | | UEP95 | M1GBC | 18.58 | 22.14 | 15.25 | 8.45 | 3.91 | | 30.89 | 7.03 | | | |
| | | Interoffice Channel mileage, per mile or fraction of mile | | | UEP95 | M1GBM | 0.0174 | | | | | | | | | | |
| | **Feature Activations (DS0) Centrex Loops on Channelized DS1 Service** | | | | | | | | | | | | | | | | |
| | **D4 Channel Bank Feature Activations** | | | | | | | | | | | | | | | | |
| | | Feature Activation on D-4 Channel Bank Centrex Loop Slot | | | UEP95 | 1PQWS | 0.66 | | | | | | | | | | |
| | | Feature Activation on D-4 Channel Bank FX line Side Loop Slot | | | UEP95 | 1PQW6 | 0.66 | | | | | | | | | | |
| | | Feature Activation on D-4 Channel Bank FX Trunk Side Loop Slot | | | UEP95 | 1PQW7 | 0.66 | | | | | | | | | | |

## UNBUNDLED NETWORK ELEMENTS - Tennessee

| CATEGORY | RATE ELEMENTS | Interim | Zone | BCS | USOC | RATES ($) | | | | | Svc Order Submitted Elec per LSR | Svc Order Submitted Manually per LSR | Attachment: 2 Incremental Charge - Manual Svc Order vs. Electronic-1st | Attachment: 2 Incremental Charge - Manual Svc Order vs. Electronic-Add'l | Exhibit: A Incremental Charge - Manual Svc Order vs. Electronic-Disc 1st | Exhibit: A Incremental Charge - Manual Svc Order vs. Electronic-Disc Add'l |
|---|---|---|---|---|---|---|---|---|---|---|---|---|---|---|---|---|
| | | | | | | Rec | Nonrecurring | | Nonrecurring Disconnect | | OSS Rates ($) | | | | | |
| | | | | | | | First | Add'l | First | Add'l | SOMEC | SOMAN | SOMAN | SOMAN | SOMAN | SOMAN |
| | Feature Activation on D-4 Channel Bank Centrex Loop Slot - Different Wire Center | | | UEP95 | 1PQWP | 0.66 | | | | | | | | | | |
| | Feature Activation on D-4 Channel Bank Private Line Loop Slot | | | UEP95 | 1PQWV | 0.66 | | | | | | | | | | |
| | Feature Activation on D-4 Channel Bank Tjie Line/Trunk Loop Slot | | | UEP95 | 1PQWQ | 0.66 | | | | | | | | | | |
| | Feature Activation on D-4 Channel Bank WATS Loop Slot | | | UEP95 | 1PQWA | 0.66 | | | | | | | | | | |
| **Non-Recurring Charges (NRC) Associated with UNE-P Centrex** | | | | | | | | | | | | | | | | |
| | NRC Conversion Currently Combined Switch-As-Is with allowed changes, per port | | | UEP95 | USAC2 | | 1.03 | 0.29 | | | | 30.89 | 7.03 | | | |
| | New Centrex Standard Common Block | | | UEP95 | M1ACS | 0.00 | 658.60 | | | | | 30.89 | 7.03 | | | |
| | New Centrex Customized Common Block | | | UEP95 | M1ACC | 0.00 | 658.60 | | | | | 30.89 | 7.03 | | | |
| | NAR Establishment Charge, Per Occasion | | | UEP95 | URECA | 0.00 | 68.57 | | | | | 30.89 | 7.03 | | | |
| **Additional Non-Recurring Charges (NRC)** | | | | | | | | | | | | | | | | |
| | Unbundled Miscellaneous Rate Element, Tag Loop at End Use Premise | | | UEP95 | URETL | | 8.33 | 0.83 | | | | | | | | |
| | Unbundled Miscellaneous Rate Element, Tag Design Loop at End Use Premise | | | UEP95 | URETN | | 11.23 | 1.10 | | | | | | | | |
| **UNE-P CENTREX - DMS100 (Valid in All States)** | | | | | | | | | | | | | | | | |
| **2-Wire VG Loop/2-Wire Voice Grade Port (Centrex) Combo** | | | | | | | | | | | | | | | | |
| **UNE Port/Loop Combination Rates (Non-Design)** | | | | | | | | | | | | | | | | |
| | 2-Wire VG Loop/2-Wire Voice Grade Port (Centrex) Port Combo - Non-Design | | 1 | UEP9D | | 14.18 | | | | | | | | | | |
| | 2-Wire VG Loop/2-Wire Voice Grade Port (Centrex)Port Combo - Non-Design | | 2 | UEP9D | | 18.01 | | | | | | | | | | |
| | 2-Wire VG Loop/2-Wire Voice Grade Port (Centrex)Port Combo - Non-Design | | 3 | UEP9D | | 23.02 | | | | | | | | | | |
| **UNE Port/Loop Combination Rates (Design)** | | | | | | | | | | | | | | | | |
| | 2-Wire VG Loop/2-Wire Voice Grade Port (Centrex) Port Combo - Design | | 1 | UEP9D | | 18.26 | | | | | | | | | | |
| | 2-Wire VG Loop/2-Wire Voice Grade Port (Centrex)Port Combo - Design | | 2 | UEP9D | | 23.33 | | | | | | | | | | |
| | 2-Wire VG Loop/2-Wire Voice Grade Port (Centrex)Port Combo - Design | | 3 | UEP9D | | 29.98 | | | | | | | | | | |
| **UNE Loop Rate** | | | | | | | | | | | | | | | | |
| | 2-Wire Voice Grade Loop (SL 1) - Zone 1 | | 1 | UEP9D | UECS1 | 12.48 | | | | | | | | | | |
| | 2-Wire Voice Grade Loop (SL 1) - Zone 2 | | 2 | UEP9D | UECS1 | 16.31 | | | | | | | | | | |
| | 2-Wire Voice Grade Loop (SL 1) - Zone 3 | | 3 | UEP9D | UECS1 | 21.32 | | | | | | | | | | |
| | 2-Wire Voice Grade Loop (SL 2) - Zone 1 | | 1 | UEP9D | UECS2 | 16.56 | | | | | | | | | | |
| | 2-Wire Voice Grade Loop (SL 2) - Zone 2 | | 2 | UEP9D | UECS2 | 21.63 | | | | | | | | | | |
| | 2-Wire Voice Grade Loop (SL 2) - Zone 3 | | 3 | UEP9D | UECS2 | 28.28 | | | | | | | | | | |
| **UNE Port Rate** | | | | | | | | | | | | | | | | |
| **ALL STATES** | | | | | | | | | | | | | | | | |
| | 2-Wire Voice Grade Port (Centrex ) Basic Local Area | | | UEP9D | UEPYA | 1.70 | 22.14 | 15.25 | 8.45 | 3.91 | | 30.89 | 7.03 | | | |
| | 2-Wire Voice Grade Port (Centrex 800 termination)Basic Local Area | | | UEP9D | UEPYB | 1.70 | 22.14 | 15.25 | 8.45 | 3.91 | | 30.89 | 7.03 | | | |
| | 2-Wire Voice Grade Port (Centrex / EBS-PSET)3Basic Local Area | | | UEP9D | UEPYC | 1.70 | 22.14 | 15.25 | 8.45 | 3.91 | | 30.89 | 7.03 | | | |
| | 2-Wire Voice Grade Port (Centrex / EBS-M5009)3Basic Local Area | | | UEP9D | UEPYD | 1.70 | 22.14 | 15.25 | 8.45 | 3.91 | | 30.89 | 7.03 | | | |
| | 2-Wire Voice Grade Port (Centrex / EBS-M5209))3 Basic Local Area | | | UEP9D | UEPYE | 1.70 | 22.14 | 15.25 | 8.45 | 3.91 | | 30.89 | 7.03 | | | |
| | 2-Wire Voice Grade Port (Centrex / EBS-M5112))3 Basic Local Area | | | UEP9D | UEPYF | 1.70 | 22.14 | 15.25 | 8.45 | 3.91 | | 30.89 | 7.03 | | | |
| | 2-Wire Voice Grade Port (Centrex / EBS-M5312))3Basic Local Area | | | UEP9D | UEPYG | 1.70 | 22.14 | 15.25 | 8.45 | 3.91 | | 30.89 | 7.03 | | | |
| | 2-Wire Voice Grade Port (Centrex / EBS-M5008))3 Basic Local Area | | | UEP9D | UEPYT | 1.70 | 22.14 | 15.25 | 8.45 | 3.91 | | 30.89 | 7.03 | | | |

| UNBUNDLED NETWORK ELEMENTS - Tennessee | | | | | | | | | | | | | | Attachment: 2 | | Exhibit: A | |
|---|---|---|---|---|---|---|---|---|---|---|---|---|---|---|---|---|---|
| CATEGORY | | RATE ELEMENTS | Interim | Zone | BCS | USOC | RATES ($) | | | | | Svc Order Submitted Elec per LSR | Svc Order Submitted Manually per LSR | Incremental Charge - Manual Svc Order vs. Electronic-1st | Incremental Charge - Manual Svc Order vs. Electronic-Add'l | Incremental Charge - Manual Svc Order vs. Electronic-Disc 1st | Incremental Charge - Manual Svc Order vs. Electronic-Disc Add'l |
| | | | | | | | Rec | Nonrecurring | | Nonrecurring Disconnect | | OSS Rates ($) | | | | | |
| | | | | | | | | First | Add'l | First | Add'l | SOMEC | SOMAN | SOMAN | SOMAN | SOMAN | SOMAN |
| | | 2-Wire Voice Grade Port (Centrex / EBS-M5208))3 Basic Local Area | | | UEP9D | UEPYU | 1.70 | 22.14 | 15.25 | 8.45 | 3.91 | | 30.89 | 7.03 | | | |
| | | 2-Wire Voice Grade Port (Centrex / EBS-M5216))3 Basic Local Area | | | UEP9D | UEPYV | 1.70 | 22.14 | 15.25 | 8.45 | 3.91 | | 30.89 | 7.03 | | | |
| | | 2-Wire Voice Grade Port (Centrex / EBS-M5316))3 Basic Local Area | | | UEP9D | UEPY3 | 1.70 | 22.14 | 15.25 | 8.45 | 3.91 | | 30.89 | 7.03 | | | |
| | | 2-Wire Voice Grade Port (Centrex with Caller ID) Basic Local Area | | | UEP9D | UEPYH | 1.70 | 22.14 | 15.25 | 8.45 | 3.91 | | 30.89 | 7.03 | | | |
| | | 2-Wire Voice Grade Port (Centrex/Caller ID/Msg Wtg Lamp Indication))4 Basic Local Area | | | UEP9D | UEPYW | 1.70 | 22.14 | 15.25 | 8.45 | 3.91 | | 30.89 | 7.03 | | | |
| | | 2-Wire Voice Grade Port (Centrex/Msg Wtg Lamp Indication))4 Basic Local Area | | | UEP9D | UEPYJ | 1.70 | 22.14 | 15.25 | 8.45 | 3.91 | | 30.89 | 7.03 | | | |
| | | 2-Wire Voice Grade Port (Centrex from diff Serving Wire Center) 2,3-Basic Local Area | | | UEP9D | UEPYM | 1.70 | 22.14 | 15.25 | 8.45 | 3.91 | | 30.89 | 7.03 | | | |
| | | 2-Wire Voice Grade Port (Centrex/differ SWC /EBS-PSET)2,3,4 Basic Local Area | | | UEP9D | UEPYO | 1.70 | 22.14 | 15.25 | 8.45 | 3.91 | | 30.89 | 7.03 | | | |
| | | 2-Wire Voice Grade Port (Centrex/differ SWC /EBS-M5009)2,3,4 Basic Local Area | | | UEP9D | UEPYP | 1.70 | 22.14 | 15.25 | 8.45 | 3.91 | | 30.89 | 7.03 | | | |
| | | 2-Wire Voice Grade Port (Centrex/differ SWC /EBS-5209)2,3,4 Basic Local Area | | | UEP9D | UEPYQ | 1.70 | 22.14 | 15.25 | 8.45 | 3.91 | | 30.89 | 7.03 | | | |
| | | 2-Wire Voice Grade Port (Centrex/differ SWC /EBS-M5112)2,3,4 Basic Local Area | | | UEP9D | UEPYR | 1.70 | 22.14 | 15.25 | 8.45 | 3.91 | | 30.89 | 7.03 | | | |
| | | 2-Wire Voice Grade Port (Centrex/differ SWC /EBS-M5312)2,3,4 Basic Local Area | | | UEP9D | UEPYS | 1.70 | 22.14 | 15.25 | 8.45 | 3.91 | | 30.89 | 7.03 | | | |
| | | 2-Wire Voice Grade Port (Centrex/differ SWC /EBS-M5008)2,3,4 Basic Local Area | | | UEP9D | UEPY4 | 1.70 | 22.14 | 15.25 | 8.45 | 3.91 | | 30.89 | 7.03 | | | |
| | | 2-Wire Voice Grade Port (Centrex/differ SWC /EBS-M5208)2, 3 Basic Local Area | | | UEP9D | UEPY5 | 1.70 | 22.14 | 15.25 | 8.45 | 3.91 | | 30.89 | 7.03 | | | |
| | | 2-Wire Voice Grade Port (Centrex/differ SWC /EBS-M5216)2,3,4 Basic Local Area | | | UEP9D | UEPY6 | 1.70 | 22.14 | 15.25 | 8.45 | 3.91 | | 30.89 | 7.03 | | | |
| | | 2-Wire Voice Grade Port (Centrex/differ SWC /EBS-M5316)2,3,4 Basic Local Area | | | UEP9D | UEPY7 | 1.70 | 22.14 | 15.25 | 8.45 | 3.91 | | 30.89 | 7.03 | | | |
| | | 2-Wire Voice Grade Port, Diff Serving Wire Center - 800 Service Term 2,3 | | | UEP9D | UEPYZ | 1.70 | 22.14 | 15.25 | 8.45 | 3.91 | | 30.89 | 7.03 | | | |
| | | 2-Wire Voice Grade Port terminated in on Megalink or equivalent Basic Local Area | | | UEP9D | UEPY9 | 1.70 | 22.14 | 15.25 | 8.45 | 3.91 | | 30.89 | 7.03 | | | |
| | | 2-Wire Voice Grade Port Terminated on 800 Service Term Basic Local Area | | | UEP9D | UEPY2 | 1.70 | 22.14 | 15.25 | 8.45 | 3.91 | | 30.89 | 7.03 | | | |
| | AL, KY, LA, MS, SC, & TN Only | | | | | | | | | | | | | | | | |
| | | 2-Wire Voice Grade Port (Centrex) | | | UEP9D | UEPQA | 1.70 | 22.14 | 15.25 | 8.45 | 3.91 | | 30.89 | 7.03 | | | |
| | | 2-Wire Voice Grade Port (Centrex 800 termination) | | | UEP9D | UEPQB | 1.70 | 22.14 | 15.25 | 8.45 | 3.91 | | 30.89 | 7.03 | | | |
| | | 2-Wire Voice Grade Port (Centrex / EBS-PSET)4 | | | UEP9D | UEPQC | 1.70 | 22.14 | 15.25 | 8.45 | 3.91 | | 30.89 | 7.03 | | | |
| | | 2-Wire Voice Grade Port (Centrex / EBS-M5009)4 | | | UEP9D | UEPQD | 1.70 | 22.14 | 15.25 | 8.45 | 3.91 | | 30.89 | 7.03 | | | |
| | | 2-Wire Voice Grade Port (Centrex / EBS-M5209)4 | | | UEP9D | UEPQE | 1.70 | 22.14 | 15.25 | 8.45 | 3.91 | | 30.89 | 7.03 | | | |
| | | 2-Wire Voice Grade Port (Centrex / EBS-M5112)4 | | | UEP9D | UEPQF | 1.70 | 22.14 | 15.25 | 8.45 | 3.91 | | 30.89 | 7.03 | | | |
| | | 2-Wire Voice Grade Port (Centrex / EBS-M5312)4 | | | UEP9D | UEPQG | 1.70 | 22.14 | 15.25 | 8.45 | 3.91 | | 30.89 | 7.03 | | | |
| | | 2-Wire Voice Grade Port (Centrex / EBS-M5008)4 | | | UEP9D | UEPQT | 1.70 | 22.14 | 15.25 | 8.45 | 3.91 | | 30.89 | 7.03 | | | |
| | | 2-Wire Voice Grade Port (Centrex / EBS-M5208)4 | | | UEP9D | UEPQU | 1.70 | 22.14 | 15.25 | 8.45 | 3.91 | | 30.89 | 7.03 | | | |
| | | 2-Wire Voice Grade Port (Centrex / EBS-M5216)4 | | | UEP9D | UEPQV | 1.70 | 22.14 | 15.25 | 8.45 | 3.91 | | 30.89 | 7.03 | | | |
| | | 2-Wire Voice Grade Port (Centrex / EBS-M5316)4 | | | UEP9D | UEPQ3 | 1.70 | 22.14 | 15.25 | 8.45 | 3.91 | | 30.89 | 7.03 | | | |
| | | 2-Wire Voice Grade Port (Centrex with Caller ID) | | | UEP9D | UEPQH | 1.70 | 22.14 | 15.25 | 8.45 | 3.91 | | 30.89 | 7.03 | | | |
| | | 2-Wire Voice Grade Port (Centrex/Caller ID/Msg Wtg Lamp Indication)4 | | | UEP9D | UEPQW | 1.70 | 22.14 | 15.25 | 8.45 | 3.91 | | 30.89 | 7.03 | | | |
| | | 2-Wire Voice Grade Port (Centrex/Msg Wtg Lamp Indication)4 | | | UEP9D | UEPQJ | 1.70 | 22.14 | 15.25 | 8.45 | 3.91 | | 30.89 | 7.03 | | | |
| | | 2-Wire Voice Grade Port (Centrex from diff Serving Wire Center) 2,3 | | | UEP9D | UEPQM | 1.70 | 22.14 | 15.25 | 8.45 | 3.91 | | 30.89 | 7.03 | | | |
| | | 2-Wire Voice Grade Port (Centrex/differ SWC /EBS-PSET)2,3,4 | | | UEP9D | UEPQO | 1.70 | 22.14 | 15.25 | 8.45 | 3.91 | | 30.89 | 7.03 | | | |

| UNBUNDLED NETWORK ELEMENTS - Tennessee | | | | | | | | | | | | | | Attachment: 2 | | Exhibit: A | |
|---|---|---|---|---|---|---|---|---|---|---|---|---|---|---|---|---|---|
| CATEGORY | RATE ELEMENTS | Interim | Zone | BCS | USOC | RATES ($) | | | | | Svc Order Submitted Elec per LSR | Svc Order Submitted Manually per LSR | Incremental Charge - Manual Svc Order vs. Electronic-1st | Incremental Charge - Manual Svc Order vs. Electronic-Add'l | Incremental Charge - Manual Svc Order vs. Electronic-Disc 1st | Incremental Charge - Manual Svc Order vs. Electronic-Disc Add'l |
| | | | | | | Rec | Nonrecurring | | Nonrecurring Disconnect | | OSS Rates ($) | | | | | |
| | | | | | | | First | Add'l | First | Add'l | SOMEC | SOMAN | SOMAN | SOMAN | SOMAN | SOMAN |
| | 2-Wire Voice Grade Port (Centrex/differ SWC /EBS-M5009)2,3,4 | | | UEP9D | UEPQP | 1.70 | 22.14 | 15.25 | 8.45 | 3.91 | | 30.89 | 7.03 | | | |
| | 2-Wire Voice Grade Port (Centrex/differ SWC /EBS-5209)2,3,4 | | | UEP9D | UEPQQ | 1.70 | 22.14 | 15.25 | 8.45 | 3.91 | | 30.89 | 7.03 | | | |
| | 2-Wire Voice Grade Port (Centrex/differ SWC /EBS-M5112)2,3,4 | | | UEP9D | UEPQR | 1.70 | 22.14 | 15.25 | 8.45 | 3.91 | | 30.89 | 7.03 | | | |
| | 2-Wire Voice Grade Port (Centrex/differ SWC /EBS-M5312)2,3,4 | | | UEP9D | UEPQS | 1.70 | 22.14 | 15.25 | 8.45 | 3.91 | | 30.89 | 7.03 | | | |
| | 2-Wire Voice Grade Port (Centrex/differ SWC /EBS-M5008)2,3,4 | | | UEP9D | UEPQ4 | 1.70 | 22.14 | 15.25 | 8.45 | 3.91 | | 30.89 | 7.03 | | | |
| | 2-Wire Voice Grade Port (Centrex/differ SWC /EBS-M5208)2,3,4 | | | UEP9D | UEPQ5 | 1.70 | 22.14 | 15.25 | 8.45 | 3.91 | | 30.89 | 7.03 | | | |
| | 2-Wire Voice Grade Port (Centrex/differ SWC /EBS-M5216)2,3,4 | | | UEP9D | UEPQ6 | 1.70 | 22.14 | 15.25 | 8.45 | 3.91 | | 30.89 | 7.03 | | | |
| | 2-Wire Voice Grade Port (Centrex/differ SWC /EBS-M5316)2,3,4 | | | UEP9D | UEPQ7 | 1.70 | 22.14 | 15.25 | 8.45 | 3.91 | | 30.89 | 7.03 | | | |
| | 2-Wire Voice Grade Port, Diff Serving Wire Center - 800 Service Term 2,3 | | | UEP9D | UEPQZ | 1.70 | 22.14 | 15.25 | 8.45 | 3.91 | | 30.89 | 7.03 | | | |
| | 2-Wire Voice Grade Port terminated in on Megalink or equivalent | | | UEP9D | UEPQ9 | 1.70 | 22.14 | 15.25 | 8.45 | 3.91 | | 30.89 | 7.03 | | | |
| | 2-Wire Voice Grade Port Terminated on 800 Service Term | | | UEP9D | UEPQ2 | 1.70 | 22.14 | 15.25 | 8.45 | 3.91 | | 30.89 | 7.03 | | | |
| **Local Switching** | | | | | | | | | | | | | | | | | |
| | Centrex Intercom Funtionality, per port | | | UEP9D | URECS | 0.6381 | | | | | | | | | | | |
| **Local Number Portability** | | | | | | | | | | | | | | | | | |
| | Local Number Portability (1 per port) | | | UEP9D | LNPCC | 0.35 | | | | | | | | | | | |
| **Features** | | | | | | | | | | | | | | | | | |
| | All Standard Features Offered, per port | | | UEP9D | UEPVF | 0.00 | | | | | | 30.89 | 7.03 | | | | |
| | All Select Features Offered, per port | | | UEP9D | UEPVS | 0.00 | 433.78 | | | | | 30.89 | 7.03 | | | | |
| | All Centrex Control Features Offered, per port | | | UEP9D | UEPVC | 0.00 | | | | | | 30.89 | 7.03 | | | | |
| **NARS** | | | | | | | | | | | | | | | | | |
| | Unbundled Network Access Register - Combination | | | UEP9D | UARCX | 0.00 | 0.00 | 0.00 | 0.00 | 0.00 | | 0.00 | 7.03 | | | | |
| | Unbundled Network Access Register - Inward | | | UEP9D | UAR1X | 0.00 | 0.00 | 0.00 | 0.00 | 0.00 | | 0.00 | 7.03 | | | | |
| | Unbundled Network Access Register - Outdial | | | UEP9D | UAROX | 0.00 | 0.00 | 0.00 | 0.00 | 0.00 | | 0.00 | 7.03 | | | | |
| **Miscellaneous Terminations** | | | | | | | | | | | | | | | | | |
| **2-Wire Trunk Side** | | | | | | | | | | | | | | | | | |
| | Trunk Side Terminations, each | | | UEP9D | CEND6 | 8.78 | 22.14 | 15.25 | 8.45 | 3.91 | | 30.89 | 7.03 | | | | |
| **4-Wire Digital (1.544 Megabits)** | | | | | | | | | | | | | | | | | |
| | DS1 Circuit Terminations, each | | | UEP9D | M1HD1 | 35.55 | 75.93 | 38.15 | | | | 30.89 | 7.03 | | | | |
| | DS0 Channels Activiated per Channel | | | UEP9D | M1HDO | 0.00 | 108.67 | | | | | 30.89 | 7.03 | | | | |
| **Interoffice Channel Mileage - 2-Wire** | | | | | | | | | | | | | | | | | |
| | Interoffice Channel Facilities Termination | | | UEP9D | M1GBC | 18.58 | 22.14 | 15.25 | 8.45 | 3.91 | | 30.89 | 7.03 | | | | |
| | Interoffice Channel mileage, per mile or fraction of mile | | | UEP9D | M1GBM | 0.0174 | | | | | | | | | | | |
| **Feature Activations (DS0) Centrex Loops on Channelized DS1 Service** | | | | | | | | | | | | | | | | | |
| **D4 Channel Bank Feature Activations** | | | | | | | | | | | | | | | | | |
| | Feature Activation on D-4 Channel Bank Centrex Loop Slot | | | UEP9D | 1PQWS | 0.66 | | | | | | | | | | | |
| | Feature Activation on D-4 Channel Bank FX line Side Loop Slot | | | UEP9D | 1PQW6 | 0.66 | | | | | | | | | | | |
| | Feature Activation on D-4 Channel Bank FX Trunk Side Loop Slot | | | UEP9D | 1PQW7 | 0.66 | | | | | | | | | | | |
| | Feature Activation on D-4 Channel Bank Centrex Loop Slot - Different Wire Center | | | UEP9D | 1PQWP | 0.66 | | | | | | | | | | | |
| | Feature Activation on D-4 Channel Bank Private Line Loop Slot | | | UEP9D | 1PQWV | 0.66 | | | | | | | | | | | |
| | Feature Activation on D-4 Channel Bank Tjie Line/Trunk Loop Slot | | | UEP9D | 1PQWQ | 0.66 | | | | | | | | | | | |
| | Feature Activation on D-4 Channel Bank WATS Loop Slot | | | UEP9D | 1PQWA | 0.66 | | | | | | | | | | | |
| **Non-Recurring Charges (NRC) Associated with UNE-P Centrex** | | | | | | | | | | | | | | | | | |
| | NRC Conversion Currently Combined Switch-As-Is with allowed changes, per port | | | UEP9D | USAC2 | | 1.03 | 0.29 | | | | 30.89 | 7.03 | | | | |

## UNBUNDLED NETWORK ELEMENTS - Tennessee

| CATEGORY | RATE ELEMENTS | Interim | Zone | BCS | USOC | RATES ($) | | | | | Svc Order Submitted Elec per LSR | Svc Order Submitted Manually per LSR | Attachment: 2 | | Exhibit: A | |
|---|---|---|---|---|---|---|---|---|---|---|---|---|---|---|---|---|
| | | | | | | | | | | | | | Incremental Charge - Manual Svc Order vs. Electronic-1st | Incremental Charge - Manual Svc Order vs. Electronic-Add'l | Incremental Charge - Manual Svc Order vs. Electronic-Disc 1st | Incremental Charge - Manual Svc Order vs. Electronic-Disc Add'l |
| | | | | | | Rec | Nonrecurring | | Nonrecurring Disconnect | | OSS Rates ($) | | | | | |
| | | | | | | | First | Add'l | First | Add'l | SOMEC | SOMAN | SOMAN | SOMAN | SOMAN | SOMAN |
| | New Centrex Standard Common Block | | | UEP9D | M1ACS | 0.00 | 658.60 | | | | | 30.89 | 7.03 | | | |
| | New Centrex Customized Common Block | | | UEP9D | M1ACC | 0.00 | 658.60 | | | | | 30.89 | 7.03 | | | |
| | NAR Establishment Charge, Per Occasion | | | UEP9D | URECA | | 68.57 | | | | | 30.89 | 7.03 | | | |
| **Additional Non-Recurring Charges (NRC)** | | | | | | | | | | | | | | | | |
| | Unbundled Miscellaneous Rate Element, Tag Loop at End Use Premise | | | UEP9D | URETL | | 8.33 | 0.83 | | | | | | | | |
| | Unbundled Miscellaneous Rate Element, Tag Design Loop at End Use Premise | | | UEP9D | URETN | | 11.23 | 1.10 | | | | | | | | |
| **UNE-P CENTREX - EWSD (Valid in AL, FL, KY, LA, MS & TN)** | | | | | | | | | | | | | | | | |
| **2-Wire VG Loop/2-Wire Voice Grade Port (Centrex) Combo** | | | | | | | | | | | | | | | | |
| **UNE Port/Loop Combination Rates (Non-Design)** | | | | | | | | | | | | | | | | |
| | 2-Wire VG Loop/2-Wire Voice Grade Port (Centrex) Port Combo - Non-Design | | 1 | UEP9E | | 14.18 | | | | | | | | | | |
| | 2-Wire VG Loop/2-Wire Voice Grade Port (Centrex)Port Combo - Non-Design | | 2 | UEP9E | | 18.01 | | | | | | | | | | |
| | 2-Wire VG Loop/2-Wire Voice Grade Port (Centrex)Port Combo - Non-Design | | 3 | UEP9E | | 23.02 | | | | | | | | | | |
| **UNE Port/Loop Combination Rates (Design)** | | | | | | | | | | | | | | | | |
| | 2-Wire VG Loop/2-Wire Voice Grade Port (Centrex) Port Combo - Design | | 1 | UEP9E | | 18.26 | | | | | | | | | | |
| | 2-Wire VG Loop/2-Wire Voice Grade Port (Centrex)Port Combo - Design | | 2 | UEP9E | | 23.33 | | | | | | | | | | |
| | 2-Wire VG Loop/2-Wire Voice Grade Port (Centrex)Port Combo - Design | | 3 | UEP9E | | 29.98 | | | | | | | | | | |
| **UNE Loop Rate** | | | | | | | | | | | | | | | | |
| | 2-Wire Voice Grade Loop (SL 1) - Zone 1 | | 1 | UEP9E | UECS1 | 12.48 | | | | | | | | | | |
| | 2-Wire Voice Grade Loop (SL 1) - Zone 2 | | 2 | UEP9E | UECS1 | 16.31 | | | | | | | | | | |
| | 2-Wire Voice Grade Loop (SL 1) - Zone 3 | | 3 | UEP9E | UECS1 | 21.32 | | | | | | | | | | |
| | 2-Wire Voice Grade Loop (SL 2) - Zone 1 | | 1 | UEP9E | UECS2 | 16.56 | | | | | | | | | | |
| | 2-Wire Voice Grade Loop (SL 2) - Zone 2 | | 2 | UEP9E | UECS2 | 21.63 | | | | | | | | | | |
| | 2-Wire Voice Grade Loop (SL 2) - Zone 3 | | 3 | UEP9E | UECS2 | 28.28 | | | | | | | | | | |
| **UNE Port Rate** | | | | | | | | | | | | | | | | |
| **AL, FL, KY, LA, MS, & TN only** | | | | | | | | | | | | | | | | |
| | 2-Wire Voice Grade Port (Centrex ) Basic Local Area | | | UEP9E | UEPYA | 1.70 | 22.14 | 15.25 | 8.45 | 3.91 | | 30.89 | 7.03 | | | |
| | 2-Wire Voice Grade Port (Centrex 800 termination)Basic Local Area | | | UEP9E | UEPYB | 1.70 | 22.14 | 15.25 | 8.45 | 3.91 | | 30.89 | 7.03 | | | |
| | 2-Wire Voice Grade Port (Centrex with Caller ID)1Basic Local Area | | | UEP9E | UEPYH | 1.70 | 22.14 | 15.25 | 8.45 | 3.91 | | 30.89 | 7.03 | | | |
| | 2-Wire Voice Grade Port (Centrex from diff Serving Wire Center)2,3 Basic Local Area | | | UEP9E | UEPYM | 1.70 | 22.14 | 15.25 | 8.45 | 3.91 | | 30.89 | 7.03 | | | |
| | 2-Wire Voice Grade Port, Diff Serving Wire Center 2,3 - 800 Service Term - Basic Local Area | | | UEP9E | UEPYZ | 1.70 | 22.14 | 15.25 | 8.45 | 3.91 | | 30.89 | 7.03 | | | |
| | 2-Wire Voice Grade Port terminated in on Megalink or equivalent - Basic Local Area | | | UEP9E | UEPY9 | 1.70 | 22.14 | 15.25 | 8.45 | 3.91 | | 30.89 | 7.03 | | | |
| | 2-Wire Voice Grade Port Terminated on 800 Service Term - Basic Local Area | | | UEP9E | UEPY2 | 1.70 | 22.14 | 15.25 | 8.45 | 3.91 | | 30.89 | 7.03 | | | |
| **AL, KY, LA, MS, & TN Only** | | | | | | | | | | | | | | | | |
| | 2-Wire Voice Grade Port (Centrex ) | | | UEP9E | UEPQA | 1.70 | 22.14 | 15.25 | 8.45 | 3.91 | | 30.89 | 7.03 | | | |
| | 2-Wire Voice Grade Port (Centrex 800 termination) | | | UEP9E | UEPQB | 1.70 | 22.14 | 15.25 | 8.45 | 3.91 | | 30.89 | 7.03 | | | |
| | 2-Wire Voice Grade Port (Centrex with Caller ID)1 | | | UEP9E | UEPQH | 1.70 | 22.14 | 15.25 | 8.45 | 3.91 | | 30.89 | 7.03 | | | |
| | 2-Wire Voice Grade Port (Centrex from diff Serving Wire Center)2,3 | | | UEP9E | UEPQM | 1.70 | 22.14 | 15.25 | 8.45 | 3.91 | | 30.89 | 7.03 | | | |
| | 2-Wire Voice Grade Port, Diff Serving Wire Center 2,3 - 800 Service Term | | | UEP9E | UEPQZ | 1.70 | 22.14 | 15.25 | 8.45 | 3.91 | | 30.89 | 7.03 | | | |
| | 2-Wire Voice Grade Port terminated in on Megalink or equivalent | | | UEP9E | UEPQ9 | 1.70 | 22.14 | 15.25 | 8.45 | 3.91 | | 30.89 | 7.03 | | | |
| | 2-Wire Voice Grade Port Terminated on 800 Service Term | | | UEP9E | UEPQ2 | 1.70 | 22.14 | 15.25 | 8.45 | 3.91 | | 30.89 | 7.03 | | | |
| **Local Switching** | | | | | | | | | | | | | | | | |
| | Centrex Intercom Funtionality, per port | | | UEP9E | URECS | 0.6381 | | | | | | | | | | |

## UNBUNDLED NETWORK ELEMENTS - Tennessee

| CATEGORY | RATE ELEMENTS | Interim | Zone | BCS | USOC | RATES ($) | | | | | Svc Order Submitted Elec per LSR | Svc Order Submitted Manually per LSR | Attachment: 2 | | Exhibit: A | |
|---|---|---|---|---|---|---|---|---|---|---|---|---|---|---|---|---|
| | | | | | | | | | | | | | Incremental Charge - Manual Svc Order vs. Electronic-1st | Incremental Charge - Manual Svc Order vs. Electronic-Add'l | Incremental Charge - Manual Svc Order vs. Electronic-Disc 1st | Incremental Charge - Manual Svc Order vs. Electronic-Disc Add'l |
| | | | | | | Rec | Nonrecurring | | Nonrecurring Disconnect | | OSS Rates ($) | | | | | |
| | | | | | | | First | Add'l | First | Add'l | SOMEC | SOMAN | SOMAN | SOMAN | SOMAN | SOMAN |
| **Local Number Portability** | | | | | | | | | | | | | | | | |
| | Local Number Portability (1 per port) | | | UEP9E | LNPCC | 0.35 | | | | | | | | | | |
| **Features** | | | | | | | | | | | | | | | | |
| | All Standard Features Offered, per port | | | UEP9E | UEPVF | 0.00 | | | | | | 30.89 | 7.03 | | | |
| | All Select Features Offered, per port | | | UEP9E | UEPVS | 0.00 | 433.78 | | | | | 30.89 | 7.03 | | | |
| | All Centrex Control Features Offered, per port | | | UEP9E | UEPVC | 0.00 | | | | | | 30.89 | 7.03 | | | |
| **NARS** | | | | | | | | | | | | | | | | |
| | Unbundled Network Access Register - Combination | | | UEP9E | UARCX | 0.00 | 0.00 | 0.00 | 0.00 | 0.00 | | 0.00 | 7.03 | | | |
| | Unbundled Network Access Register - Indial | | | UEP9E | UAR1X | 0.00 | 0.00 | 0.00 | 0.00 | 0.00 | | 0.00 | 7.03 | | | |
| | Unbundled Network Access Register - Outdial | | | UEP9E | UAROX | 0.00 | 0.00 | 0.00 | 0.00 | 0.00 | | 0.00 | 7.03 | | | |
| **Miscellaneous Terminations** | | | | | | | | | | | | | | | | |
| **2-Wire Trunk Side** | | | | | | | | | | | | | | | | |
| | Trunk Side Terminations, each | | | UEP9E | CEND6 | 8.78 | 22.14 | 15.25 | 8.45 | 3.91 | | 30.89 | 7.03 | | | |
| **4-Wire Digital (1.544 Megabits)** | | | | | | | | | | | | | | | | |
| | DS1 Circuit Terminations, each | | | UEP9E | M1HD1 | 35.55 | 75.93 | 38.15 | | | | 30.89 | 7.03 | | | |
| | DS0 Channel Activated Per Channel | | | UEP9E | M1HDO | 0.00 | 108.67 | | | | | 30.89 | 7.03 | | | |
| **Interoffice Channel Mileage - 2-Wire** | | | | | | | | | | | | | | | | |
| | Interoffice Channel Facilities Termination | | | UEP9E | M1GBC | 18.58 | 22.14 | 15.25 | 8.45 | 3.91 | | 30.89 | 7.03 | | | |
| | Interoffice Channel mileage, per mile or fraction of mile | | | UEP9E | M1GBM | 0.0174 | | | | | | | | | | |
| **Feature Activations (DS0) Centrex Loops on Channelized DS1 Service** | | | | | | | | | | | | | | | | |
| **D4 Channel Bank Feature Activations** | | | | | | | | | | | | | | | | |
| | Feature Activation on D-4 Channel Bank Centrex Loop Slot | | | UEP9E | 1PQWS | 0.66 | | | | | | | | | | |
| | Feature Activation on D-4 Channel Bank FX line Side Loop Slot | | | UEP9E | 1PQW6 | 0.66 | | | | | | | | | | |
| | Feature Activation on D-4 Channel Bank FX Trunk Side Loop Slot | | | UEP9E | 1PQW7 | 0.66 | | | | | | | | | | |
| | Feature Activation on D-4 Channel Bank Centrex Loop Slot - Different Wire Center | | | UEP9E | 1PQWP | 0.66 | | | | | | | | | | |
| | Feature Activation on D-4 Channel Bank Private Line Loop Slot | | | UEP9E | 1PQWV | 0.66 | | | | | | | | | | |
| | Feature Activation on D-4 Channel Bank Tjie Line/Trunk Loop Slot | | | UEP9E | 1PQWQ | 0.66 | | | | | | | | | | |
| | Feature Activation on D-4 Channel Bank WATS Loop Slot | | | UEP9E | 1PQWA | 0.66 | | | | | | | | | | |
| **Non-Recurring Charges (NRC) Associated with UNE-P Centrex** | | | | | | | | | | | | | | | | |
| | NRC Conversion Currently Combined Switch-As-Is with allowed changes, per port | | | UEP9E | USAC2 | | 1.03 | 0.29 | | | | 30.89 | 7.03 | | | |
| | New Centrex Standard Common Block | | | UEP9E | M1ACS | 0.00 | 658.60 | | | | | 30.89 | 7.03 | | | |
| | New Centrex Customized Common Block | | | UEP9E | M1ACC | 0.00 | 658.60 | | | | | 30.89 | 7.03 | | | |
| | NAR Establishment Charge, Per Occasion | | | UEP9E | URECA | 0.00 | 68.57 | | | | | 30.89 | 7.03 | | | |
| **Additional Non-Recurring Charges (NRC)** | | | | | | | | | | | | | | | | |
| | Unbundled Miscellaneous Rate Element, Tag Loop at End Use Premise | | | UEP9E | URETL | | 8.33 | 0.83 | | | | | | | | |
| | Unbundled Miscellaneous Rate Element, Tag Design Loop at End Use Premise | | | UEP9E | URETN | | 11.23 | 1.10 | | | | | | | | |
| **UNE-P CENTREX - DCO - Valid in AL, KY, LA, MS, & TN)** | | | | | | | | | | | | | | | | |
| **2-Wire VG Loop/2-Wire Voice Grade Port (Centrex) Combo** | | | | | | | | | | | | | | | | |
| **UNE Port/Loop Combination Rates (Non-Design)** | | | | | | | | | | | | | | | | |
| | 2-Wire VG Loop/2-Wire Voice Grade Port (Centrex) Port Combo - Non-Design | | 1 | UEP93 | | 14.18 | | | | | | | | | | |
| | 2-Wire VG Loop/2-Wire Voice Grade Port (Centrex)Port Combo - Non-Design | | 2 | UEP93 | | 18.01 | | | | | | | | | | |
| | 2-Wire VG Loop/2-Wire Voice Grade Port (Centrex)Port Combo - Non-Design | | 3 | UEP93 | | 23.02 | | | | | | | | | | |
| **UNE Port/Loop Combination Rates (Design)** | | | | | | | | | | | | | | | | |
| | 2-Wire VG Loop/2-Wire Voice Grade Port (Centrex) Port Combo - Design | | 1 | UEP93 | | 18.26 | | | | | | | | | | |
| | 2-Wire VG Loop/2-Wire Voice Grade Port (Centrex)Port Combo - Design | | 2 | UEP93 | | 23.33 | | | | | | | | | | |

## UNBUNDLED NETWORK ELEMENTS - Tennessee

| CATEGORY | RATE ELEMENTS | Interim | Zone | BCS | USOC | RATES ($) | | | | | Svc Order Submitted Elec per LSR | Svc Order Submitted Manually per LSR | Attachment: 2 | | Exhibit: A | |
|---|---|---|---|---|---|---|---|---|---|---|---|---|---|---|---|---|
| | | | | | | | | | | | | | Incremental Charge - Manual Svc Order vs. Electronic-1st | Incremental Charge - Manual Svc Order vs. Electronic-Add'l | Incremental Charge - Manual Svc Order vs. Electronic-Disc 1st | Incremental Charge - Manual Svc Order vs. Electronic-Disc Add'l |
| | | | | | | | Nonrecurring | | Nonrecurring Disconnect | | OSS Rates ($) | | | | | |
| | | | | | | Rec | First | Add'l | First | Add'l | SOMEC | SOMAN | SOMAN | SOMAN | SOMAN | SOMAN |
| | 2-Wire VG Loop/2-Wire Voice Grade Port (Centrex)Port Combo - Design | | 3 | UEP93 | | 29.98 | | | | | | | | | | |
| **UNE Loop Rate** | | | | | | | | | | | | | | | | |
| | 2-Wire Voice Grade Loop (SL 1) - Zone 1 | | 1 | UEP93 | UECS1 | 12.48 | | | | | | | | | | |
| | 2-Wire Voice Grade Loop (SL 1) - Zone 2 | | 2 | UEP93 | UECS1 | 16.31 | | | | | | | | | | |
| | 2-Wire Voice Grade Loop (SL 1) - Zone 3 | | 3 | UEP93 | UECS1 | 21.32 | | | | | | | | | | |
| | 2-Wire Voice Grade Loop (SL 2) - Zone 1 | | 1 | UEP93 | UECS2 | 16.56 | | | | | | | | | | |
| | 2-Wire Voice Grade Loop (SL 2) - Zone 2 | | 2 | UEP93 | UECS2 | 21.63 | | | | | | | | | | |
| | 2-Wire Voice Grade Loop (SL 2) - Zone 3 | | 3 | UEP93 | UECS2 | 28.28 | | | | | | | | | | |
| **UNE Port Rate** | | | | | | | | | | | | | | | | |
| **AL, KY, LA, MS, & TN only** | | | | | | | | | | | | | | | | |
| | 2-Wire Voice Grade Port (Centrex ) Basic Local Area | | | UEP93 | UEPYA | 1.70 | 22.14 | 15.25 | 8.45 | 3.91 | | 30.89 | 7.03 | | | |
| | 2-Wire Voice Grade Port (Centrex 800 termination)Basic Local Area | | | UEP93 | UEPYB | 1.70 | 22.14 | 15.25 | 8.45 | 3.91 | | 30.89 | 7.03 | | | |
| | 2-Wire Voice Grade Port (Centrex with Caller ID)1Basic Local Area | | | UEP93 | UEPYH | 1.70 | 22.14 | 15.25 | 8.45 | 3.91 | | 30.89 | 7.03 | | | |
| | 2-Wire Voice Grade Port (Centrex from diff Serving Wire Center)2,3 Basic Local Area | | | UEP93 | UEPYM | 1.70 | 22.14 | 15.25 | 8.45 | 3.91 | | 30.89 | 7.03 | | | |
| | 2-Wire Voice Grade Port, Diff Serving Wire Center - 2,3 - 800 Service Term - Basic Local Area | | | UEP93 | UEPYZ | 1.70 | 22.14 | 15.25 | 8.45 | 3.91 | | 30.89 | 7.03 | | | |
| | 2-Wire Voice Grade Port terminated in on Megalink or equivalent - Basic Local Area | | | UEP93 | UEPY9 | 1.70 | 22.14 | 15.25 | 8.45 | 3.91 | | 30.89 | 7.03 | | | |
| | 2-Wire Voice Grade Port Terminated on 800 Service Term - Basic Local Area | | | UEP93 | UEPY2 | 1.70 | 22.14 | 15.25 | 8.45 | 3.91 | | 30.89 | 7.03 | | | |
| | 2-Wire Voice Grade Port (Centrex ) | | | UEP93 | UEPQA | 1.70 | 22.14 | 15.25 | 8.45 | 3.91 | | 30.89 | 7.03 | | | |
| | 2-Wire Voice Grade Port (Centrex 800 termination) | | | UEP93 | UEPQB | 1.70 | 22.14 | 15.25 | 8.45 | 3.91 | | 30.89 | 7.03 | | | |
| | 2-Wire Voice Grade Port (Centrex with Caller ID)1 | | | UEP93 | UEPQH | 1.70 | 22.14 | 15.25 | 8.45 | 3.91 | | 30.89 | 7.03 | | | |
| | 2-Wire Voice Grade Port (Centrex from diff Serving Wire Center)2,3 | | | UEP93 | UEPQM | 1.70 | 22.14 | 15.25 | 8.45 | 3.91 | | 30.89 | 7.03 | | | |
| | 2-Wire Voice Grade Port, Diff Serving Wire Center - 2,3 -800 Service Term | | | UEP93 | UEPQZ | 1.70 | 22.14 | 15.25 | 8.45 | 3.91 | | 30.89 | 7.03 | | | |
| | 2-Wire Voice Grade Port terminated in on Megalink or equivalent | | | UEP93 | UEPQ9 | 1.70 | 22.14 | 15.25 | 8.45 | 3.91 | | 30.89 | 7.03 | | | |
| | 2-Wire Voice Grade Port Terminated on 800 Service Term | | | UEP93 | UEPQ2 | 1.70 | 22.14 | 15.25 | 8.45 | 3.91 | | 30.89 | 7.03 | | | |
| **Local Switching** | | | | | | | | | | | | | | | | |
| | Centrex Intercom Funtionality, per port | | | UEP93 | URECS | 0.6381 | | | | | | | | | | |
| **Local Number Portability** | | | | | | | | | | | | | | | | |
| | Local Number Portability (1 per port) | | | UEP93 | LNPCC | 0.35 | | | | | | | | | | |
| **Features** | | | | | | | | | | | | | | | | |
| | All Standard Features Offered, per port | | | UEP93 | UEPVF | 0.00 | | | | | | | | | | |
| | All Centrex Control Features Offered, per port | | | UEP93 | UEPVC | 0.00 | | | | | | | | | | |
| **NARS** | | | | | | | | | | | | | | | | |
| | Unbundled Network Access Register - Combination | | | UEP93 | UARCX | 0.00 | 0.00 | 0.00 | 0.00 | 0.00 | | 0.00 | 7.03 | | | |
| | Unbundled Network Access Register - Indial | | | UEP93 | UAR1X | 0.00 | 0.00 | 0.00 | 0.00 | 0.00 | | 0.00 | 7.03 | | | |
| | Unbundled Network Access Register - Outdial | | | UEP93 | UAROX | 0.00 | 0.00 | 0.00 | 0.00 | 0.00 | | 0.00 | 7.03 | | | |
| **Miscellaneous Terminations** | | | | | | | | | | | | | | | | |
| **2-Wire Trunk Side** | | | | | | | | | | | | | | | | |
| | Trunk Side Terminations, each | | | UEP93 | CEND6 | 8.78 | 22.14 | 15.25 | 8.45 | 3.91 | | 30.89 | 7.03 | | | |
| **4-Wire Digital (1.544 Megabits)** | | | | | | | | | | | | | | | | |
| | DS1 Circuit Terminations, each | | | UEP93 | M1HD1 | 35.55 | 75.93 | 38.15 | | | | 30.89 | 7.03 | | | |
| | DS0 Channels Activated, Per Channel | | | UEP93 | M1HDO | 0.00 | 108.67 | | | | | 30.89 | 7.03 | | | |
| **Interoffice Channel Mileage - 2-Wire** | | | | | | | | | | | | | | | | |
| | Interoffice Channel Facilities Termination | | | UEP93 | M1GBC | 18.58 | 22.14 | 15.25 | 8.45 | 3.91 | | 30.89 | 7.03 | | | |
| | Interoffice Channel mileage, per mile or fraction of mile | | | UEP93 | M1GBM | 0.0174 | | | | | | | | | | |
| **Feature Activations (DS0) Centrex Loops on Channelized DS1 Service** | | | | | | | | | | | | | | | | |
| **D4 Channel Bank Feature Activations** | | | | | | | | | | | | | | | | |
| | Feature Activation on D-4 Channel Bank Centrex Loop Slot | | | UEP93 | 1PQWS | 0.66 | | | | | | | | | | |
| | Feature Activation on D-4 Channel Bank FX Line Side Loop Slot | | | UEP93 | 1PQW6 | 0.66 | | | | | | | | | | |

| UNBUNDLED NETWORK ELEMENTS - Tennessee | | | | | | | | | | | | | | Attachment: 2 | | Exhibit: A | |
|---|---|---|---|---|---|---|---|---|---|---|---|---|---|---|---|---|---|
| CATEGORY | | RATE ELEMENTS | Interim | Zone | BCS | USOC | RATES ($) | | | | | Svc Order Submitted Elec per LSR | Svc Order Submitted Manually per LSR | Incremental Charge - Manual Svc Order vs. Electronic-1st | Incremental Charge - Manual Svc Order vs. Electronic-Add'l | Incremental Charge - Manual Svc Order vs. Electronic-Disc 1st | Incremental Charge - Manual Svc Order vs. Electronic-Disc Add'l |
| | | | | | | | Rec | Nonrecurring | | Nonrecurring Disconnect | | OSS Rates ($) | | | | | |
| | | | | | | | | First | Add'l | First | Add'l | SOMEC | SOMAN | SOMAN | SOMAN | SOMAN | SOMAN |
| | | Feature Activation on D-4 Channel Bank FX Trunk Side Loop Slot | | | UEP93 | 1PQW7 | 0.66 | | | | | | | | | | |
| | | Feature Activation on D-4 Channel Bank Centrex Loop Slot - Different Wire Center | | | UEP93 | 1PQWP | 0.66 | | | | | | | | | | |
| | | Feature Activation on D-4 Channel Bank Private Line Loop Slot | | | UEP93 | 1PQWV | 0.66 | | | | | | | | | | |
| | | Feature Activation on D-4 Channel Bank Tie Line/Trunk Loop Slot | | | UEP93 | 1PQWQ | 0.66 | | | | | | | | | | |
| | | Feature Activation on D-4 Channel Bank WATS Loop Slot | | | UEP93 | 1PQWA | 0.66 | | | | | | | | | | |
| | **Non-Recurring Charges (NRC) Associated with UNE-P Centrex** | | | | | | | | | | | | | | | | |
| | | NRC Conversion Currently Combined Switch-As-Is with allowed changes, per port | | | UEP93 | USAC2 | | 1.03 | 0.29 | | | | 30.89 | 7.03 | | | |
| | | New Centrex Standard Common Block | | | UEP93 | M1ACS | 0.00 | 658.60 | | | | | 30.89 | 7.03 | | | |
| | | New Centrex Customized Common Block | | | UEP93 | M1ACC | 0.00 | 658.60 | | | | | 30.89 | 7.03 | | | |
| | | NAR Establishment Charge, Per Occasion | | | UEP93 | URECA | | 68.57 | | | | | 30.89 | 7.03 | | | |
| | **Additional Non-Recurring Charges (NRC)** | | | | | | | | | | | | | | | | |
| | | Unbundled Miscellaneous Rate Element, Tag Loop at End Use Premise | | | UEP93 | URETL | | 8.33 | 0.83 | | | | | | | | |
| | | Unbundled Miscellaneous Rate Element, Tag Design Loop at End Use Premise | | | UEP93 | URETN | | 11.23 | 1.10 | | | | | | | | |
| | **Note 1 - Required Port for Centrex Control in 1AESS, 5ESS & EWSD** | | | | | | | | | | | | | | | | |
| | **Note 2 - Requres Interoffice Channel Mileage** | | | | | | | | | | | | | | | | |
| | **Note 3 - Installation is combination of Installation charge for SL2 Loop and Port** | | | | | | | | | | | | | | | | |
| | **Note 4 - Requires Specific Customer Premises Equipment** | | | | | | | | | | | | | | | | |
| | **Note: Rates displaying an "R" in Interim column are interim and subject to rate true-up as set forth in General Terms and Conditions.** | | | | | | | | | | | | | | | | |

# Attachment 3

# Network Interconnection

# TABLE OF CONTENTS

1. GENERAL ..... 3

2. DEFINITIONS: (FOR THE PURPOSE OF THIS ATTACHMENT) ..... 3

3. NETWORK INTERCONNECTION ..... 4

4. INTERCONNECTION TRUNK GROUP ARCHITECTURES ..... 7

5. NETWORK DESIGN AND MANAGEMENT FOR INTERCONNECTION ..... 15

6. LOCAL DIALING PARITY ..... 18

7. INTERCONNECTION COMPENSATION ..... 18

| | |
|---|---|
| Rates | Exhibit A |
| Basic Architecture | Exhibit B |
| One Way Architecture | Exhibit C |
| Two Way Architecture | Exhibit D |
| Supergroup Architecture | Exhibit E |
| BellSouth Jurisdictional Factors Reporting Guide | Exhibit F |

# NETWORK INTERCONNECTION

## 1. GENERAL

1.1.1 The Parties shall provide interconnection with each other's networks for the transmission and routing of telephone exchange service (Local Traffic), ISP-bound Traffic, and exchange access (Switched Access Traffic) on the following terms:

1.1.2 To the extent BellSouth orders local interconnection from, or exchanges traffic with Level 3 under this Attachment 3, the provisions of Section 1.2.2 "Payment responsibility", Section 1.3 "Payment Due", Section 1.6 "Late Payment", and Section 2 "Billing Disputes" of Attachment 7 will apply on a reciprocal basis to BellSouth.

## 2. DEFINITIONS: (FOR THE PURPOSE OF THIS ATTACHMENT)

2.1 For purposes of this attachment only, the following terms shall have the definitions set forth below:

2.1.1 **Call Termination** has the meaning set forth for "termination" in 47CFR § 51.701(d).

2.1.2 **Call Transport** has the meaning set forth for "transport" in 47 CFR § 51.701(c).

2.1.3 **Call Transport and Termination** is used collectively to mean the switching and transport functions from the Interconnection Point to the last point of switching.

2.1.4 **Common (Shared) Transport** is defined as the transport of the originating Party's traffic by the terminating Party over the terminating Party's common (shared) facilities between (1) the terminating Party's tandem switch and end office switch, (2) between the terminating Party's tandem switches, and/or (3) between the terminating Party's host and remote end office switches. All switches referred herein must be entered into the Local Exchange Routing Guide (LERG).

2.1.5 **Dedicated Interoffice Facility** is defined as a switch transport facility between a Party's Serving Wire Center and the first point of switching within the LATA on the other Party's network

2.1.6 **End Office Switching** is defined as the function that establishes a communications path between the trunk side and line side of the End Office switch.

2.1.7 **Fiber Meet** is an interconnection arrangement whereby the Parties physically interconnect their networks via an optical fiber interface at which one Party's facilities, provisioning, and maintenance responsibility begins and the other Party's responsibility ends.

2.1.8 **Final Trunk Group** is defined as the trunk group that does not carry overflow traffic.

2.1.9 **Interconnection Point (IP)** is the physical telecommunications equipment interface that interconnects the networks of BellSouth and Level 3.

2.1.10 **ISP-bound Traffic** is as defined in Section 7 of this Attachment.

2.1.11 **Local Channel** is defined as a switched transport facility between a Party's Interconnection Point and the IP's Serving Wire Center, where the IP is not located within the IP's Serving Wire Center.

2.1.12 **Local Traffic** is as defined in Section 7 of this Attachment.

2.1.13 **BellSouth Trunk Group (also known as a "Reciprocal Trunk Group")** is defined as a one-way trunk group carrying BellSouth originated traffic to be terminated by Level 3.

2.1.14 **Serving Wire Center** is defined as the wire center owned by one Party from which the other Party would normally obtain dial tone for its IP.

2.1.15 **Tandem Switching** is defined as the function that establishes a communications path between two switching offices through a third switching office through the provision of trunk side to trunk side switching.

2.1.16 **Transit Traffic** is traffic originating on one Party's network that is switched and/or transported by the other Party and delivered to a third party's network, or traffic originating on a third party's network that is switched and/or transported by one Party and delivered to the other Party's network.

## 3. NETWORK INTERCONNECTION

3.1 This Attachment pertains only to the provision of network interconnection where Level 3 owns, leases from a third party or otherwise provides its own switch(es).

3.2 Network interconnection may be provided by the Parties at any technically feasible point within BellSouth's network. Requests to BellSouth for interconnection at points other than as set forth in this Attachment may be made through the Bona Fide Request/New Business Request (BFR/NBR) process set out in this Agreement. The IP must be located within BellSouth's serving territory in the LATA in which traffic is originating. The IP determines the point at which the originating Party shall pay the terminating Party for the Call Transport and Termination of Local Traffic, ISP-bound Traffic and IntraLATA Toll Traffic

3.2.1 An initial IP shall be established in each LATA in which Level 3 originates, terminates, or exchanges Local Traffic or ISP-bound Traffic and interconnects with BellSouth. Pursuant to the provisions of this Attachment, the location of the initial IP in a given LATA shall be established by mutual agreement of the Parties. If the Parties are unable to agree to a mutual initial IP, each Party, as originating Party, may establish a single IP in the LATA for the delivery of its originated Local Traffic, ISP-bound Traffic, and IntraLATA Toll Traffic to the other Party for Call Transport and Termination by the terminating Party. When the Parties mutually agree to utilize two-way interconnection trunk groups for the exchange of Local Traffic, ISP-bound Traffic and IntraLATA Toll Traffic between each other, the Parties shall mutually agree to the location of IP(s).

3.2.2 Additional Interconnection Points in a particular LATA will be established by mutual agreement of the Parties. Absent mutual agreement, in order to establish additional interconnection points within a LATA either:

i) Level 3 at its sole option will establish a physical POI at each access or local tandem in the LATA in which Level 3 originates, terminates, or exchanges Local Traffic or ISP-bound Traffic, and each end office where Level 3 maintains a physical collocation arrangement (but only for those trunk groups associated with that end office), or

ii) The Parties will establish an additional IP where the traffic at the proposed additional Interconnection Point(s) in a particular LATA has exceeded 8.9 million minutes of Local Traffic, and/or ISP-bound Traffic per month for three consecutive months. Additionally, any end office to be designated as an Interconnection Point must be more than 20 miles from an existing Interconnection Point. BellSouth will not designate an Interconnection Point where physical or virtual collocation space or BellSouth fiber connectivity is not available, and BellSouth will not designate more than one Interconnection Point per Local Calling area unless such local calling area exceeds sixty (60) miles in one direction, in which case additional Interconnection Points may only be established in that local calling area pursuant to the other criteria set forth in this section. Upon written notification from the Party requesting the establishment of an additional Interconnection Point, the receiving Party has 45 calendar days to analyze, respond to, and negotiate in good faith the establishment of a location of such Interconnection Point. Should the Parties disagree that the traffic volumes justify an additional Interconnection Point, the Parties shall follow the Dispute Resolution process under this Agreement to determine whether and how the additional Interconnection Point should be established.

3.3 **Interconnection via Dedicated Facilities**

3.3.1 With the exception of Transit Traffic, the Parties shall institute a "bill and keep" compensation plan under which neither Party will charge the other Party recurring, nonrecurring or proportional use charges for trunks (one-way or two-way) and associated dedicated facilities for the exchange of Local Traffic (non-transit) and/or ISP-bound Traffic. Each Party has the obligation to install the appropriate trunks and associated facilities on its respective side of the Interconnection Point and is responsible for bearing its own costs on its side of the Interconnection Point.

3.3.1.1 Both Parties, as appropriate, shall be compensated for the ordering of trunks and facilities used exclusively for transit traffic and for ancillary traffic types including, but not limited to, 911 and OS/DA. The Parties agree that charges for such trunks and facilities are as set forth in Exhibit A to this Attachment. The Parties agree that charges for such trunks and facilities are as set forth in Exhibit A to this Attachment. In the event that a Party chooses to lease facilities from the other Party in lieu of installing facilities on its side of the Interconnection Point as required by Section 1.1.1.1 and this Section 1.2.1, such facilities are not subject to "bill and keep," but shall be purchased in accordance with 1.2.2 and 1.2.3. Nothing in this Section affects either Party's obligation set forth in Section 5.1.

3.3.2 In lieu of providing facilities on its side of Interconnection Point, either Party may purchase Local Channel facilities from the other Party. The portion of Local Channel facilities utilized for Local Traffic and ISP-bound Traffic shall be determined based upon the application of the Percent Local Facility (PLF) Factor as defined in this Attachment. Additionally, the charges applied to the portion of the Local Channel used for Local Traffic and ISP-bound Traffic as determined by the PLF are as set forth in Exhibit A to this Attachment. This factor shall be reported in addition to the switched dedicated transport jurisdictional factors specified in the BellSouth intrastate and interstate switched access tariffs.

3.3.3 Additionally, in lieu of providing facilities on its side of the Interconnection Point, either Party may purchase, Dedicated Interoffice Transport facilities. The portion of Dedicated Interoffice Transport facilities utilized for Local Traffic and ISP-bound Traffic shall be determined based upon the application of the Percent Local Facility (PLF) Factor as defined in this Attachment. Additionally, the charges applied to the portion of the Dedicated Interoffice Transport used for Local Traffic and ISP-bound Traffic as determined by the PLF are as set forth in Exhibit A to this Attachment. This factor shall be reported in addition to the switched dedicated transport jurisdictional factors specified in the BellSouth intrastate and interstate switched access tariffs.

3.4 **Fiber Meet**

3.4.1 Notwithstanding Section 3.2.1, and 3.2.2 above, if Level 3 elects to establish interconnection with BellSouth pursuant to a Fiber Meet Local Channel, Level 3 and BellSouth shall jointly engineer, operate and maintain a Synchronous Optical

Network (SONET) transmission system by which they shall interconnect their transmission and routing of Local Traffic and ISP-Bound Traffic via a Local Channel at either the DS1 or DS3 level. The Parties shall work jointly to determine the specific transmission system. However, Level 3's SONET transmission system must be compatible with BellSouth's equipment, and the Data Communications Channel (DCC) must be turned off.

3.4.2 Each Party, at its own expense, shall procure, install and maintain the agreed upon SONET transmission system in its network.

3.4.3 The Parties shall agree to a Fiber Meet point between the BellSouth Serving Wire Center and the Level 3 Serving Wire Center. The Parties shall deliver their fiber optic facilities to the Fiber Meet point with sufficient spare length to reach the fusion splice point for the Fiber Meet Point. BellSouth shall, at its own expense, provide and maintain the fusion splice point for the Fiber Meet. A building type Common Language Location Identification (CLLI) code will be established for each Fiber Meet point. All orders for interconnection facilities from the Fiber Meet point shall indicate the Fiber Meet point as the originating point for the facility.

3.4.4 Upon verbal request by Level 3, BellSouth shall allow Level 3 access to the fusion splice point for the Fiber Meet point for maintenance purposes on Level 3's side of the Fiber Meet point.

3.4.5 Neither Party shall charge the other for its Local Channel portion of the Fiber Meet facility used exclusively for Local Traffic and ISP-Bound Traffic. All other appropriate charges will apply. Level 3 shall be billed for a mixed use of the Local Channel using the actual traffic Level 3 elects to transmit over the facility and the rates from this Agreement and the appropriate tariff(s). Charges for switched and special access services shall be billed in accordance with the applicable access service tariff.

## 4. INTERCONNECTION TRUNK GROUP ARCHITECTURES

4.1 BellSouth and Level 3 shall establish interconnecting trunk groups and trunk group configurations between networks, including the use of one-way or two-way trunks in accordance with the following provisions set forth in this Agreement. For trunking purposes, traffic will be routed based on the digits dialed by the originating End User and in accordance with the LERG.

4.2 Subject to the requirements of section 3.2.1 and 3.2.2 above, Level 3 shall establish an interconnection trunk group(s) to at least one BellSouth access tandem within the LATA for the delivery of Level 3's originated Local Traffic, ISP-bound Traffic and IntraLATA Toll Traffic and for the receipt and delivery of Transit Traffic. To the extent Level 3 desires to deliver Local Traffic, ISP-bound Traffic,

IntraLATA Toll Traffic and/or Transit Traffic to BellSouth access tandems within the LATA, other than the tandems(s) to which Level 3 has established interconnection trunk groups, Level 3 shall order Multiple Tandem Access, as described in this Attachment."

4.3 Notwithstanding the forgoing, Level 3 shall establish an interconnection trunk group(s) to all BellSouth access and local tandems in the LATA where Level 3 has homed (i.e. assigned) its NPA/NXXs. Level 3 shall home its NPA/NXXs on the BellSouth tandems that serve the exchange rate center areas to which the NPA/NXXs are assigned. The specified exchange rate center assigned to each BellSouth tandem is defined in the LERG. Level 3 shall enter its NPA/NXX access and/or local tandem homing arrangements into the LERG.

4.4 Switched access traffic will be delivered to and from Interexchange Carriers (IXCs) based on Level 3's NXX access tandem homing arrangement as specified by Level 3 in the LERG.

4.5 Level 3 interconnection request that (1) deviates from the interconnection trunk group architectures as described in this Agreement, or (2) requires special BellSouth switch translations and other network modifications will require Level 3 to submit a BFR/NBR via the BFR/NBR Process as set forth in Attachment 11 of this Agreement.

4.6 Subject to the IP requirements and financial responsibility for IPs as set forth in Section 3 preceding, recurring and nonrecurring rates associated with interconnecting trunk groups for that carry an originating party's traffic on the terminating party's network between BellSouth and Level 3 are set forth in Exhibit A. To the extent a rate associated with the interconnecting trunk group is not set forth in Exhibit A, the rate shall be as set forth in the appropriate party's tariff for switched access services as filed and effective with the FCC or Commission.

4.7 Where BellSouth provides the transiting service, Level 3 shall be responsible for ordering and paying for any two-way trunks carrying Transit Traffic.

4.8 All trunk groups will be provisioned as Signaling System 7 (SS7) capable where technically feasible. If SS7 is not technically feasible multi-frequency (MF) protocol signaling shall be used.

4.9 In cases where Level 3 desires to route Level 3's originated Switched Access Traffic (i.e., where a BST end user is using Level 3 as their long distance carrier) over Level 3's local interconnection trunk groups, Level 3 may make such a request, via submission of an NBR in accordance with Attachment 11 of this Agreement. .

4.10 Each Party shall order interconnection trunks and trunk group including trunk and trunk group augmentations via the ASR process. A Firm Order Confirmation (FOC) shall be returned to the ordering Party, after receipt of a valid, error free ASR, within the timeframes set forth in each state's applicable Performance Measures. Notwithstanding the foregoing, blocking situations and projects shall be managed through BellSouth's Carrier Interconnection Switching Center (CISC) Project Management Group and Level 3's equivalent trunking group, and FOCs for such orders shall be returned in the timeframes applicable to the project. A project is defined as (1) a new trunk group or (2) a request for more than 96 trunks on a single or multiple group(s) in a given BellSouth local calling area.

4.12 **Interconnection Trunk Groups for Exchange of Local Traffic and ISP-Bound Traffic and Transit Traffic**

4.13 Upon mutual agreement of the Parties in a joint planning meeting, the Parties' shall exchange Local Traffic and ISP-Bound Traffic on two-way interconnection trunk group(s) with the quantity of trunks being mutually determined and the provisioning being jointly coordinated. Furthermore, the Parties shall agree upon the IP(s) for two-way interconnection trunk groups transporting both Parties' Local Traffic, ISP-bound Traffic and IntraLATA Toll Traffic. Level 3 shall order such two-way trunks via the Access Service Request (ASR) process. BellSouth will use the Trunk Group Service Request (TGSR) to request changes in trunking. Furthermore, the Parties shall jointly review trunk performance and forecasts on a periodic basis. The Parties' use of two-way interconnection trunk groups for the transport of Local Traffic, ISP-bound Traffic and IntraLATA Toll Traffic between the Parties does not preclude either Party from establishing, pursuant to the terms of this Attachment, additional one-way interconnection trunks for the delivery of its originated Local Traffic, ISP-bound Traffic and IntraLATA Toll Traffic to the other Party, provided that in no event shall Level 3 be required to terminate BellSouth traffic through more than one IP in a LATA. The Parties recognize that one-way interconnection trunks may exist. Where the parties have mutually agreed to utilize two-way interconnection trunk groups for the exchange of Local Traffic, ISP-bound Traffic and IntraLATA Toll Traffic between each other and have agreed as to the appropriate location of the IP for such two-way interconnection trunk groups, the Parties agree to negotiate a transition plan to migrate the existing one-way trunks to two-way trunks on a trunk group basis. The Parties will coordinate any such migration, trunk group prioritization, and implementation schedule. The Parties will mutually develop a reasonable transition plan and reasonably project manage the transition

4.13.1 **BellSouth Access Tandem Interconnection**

BellSouth access tandem interconnection at a single access tandem provides access to those end offices subtending that access tandem (Intratandem Access). Access tandem interconnection is available for any of the following access tandem architectures

4.13.1.1 **Basic Architecture**

In the basic architecture, Level 3's originating Local Traffic, ISP-bound Traffic and IntraLATA Toll Traffic and originating and terminating Transit Traffic is transported on a single two-way trunk group between Level 3 and BellSouth access tandem(s) within a LATA to provide Intratandem Access. This trunk group carries Transit Traffic between Level 3 and Independent Companies, Interexchange Carriers, other CLECs, CMRS providers that have a Meet Point Billing arrangement with BellSouth, and other network providers with which Level 3 desires to exchange traffic. This trunk group also carries Level 3 originated Transit Traffic transiting a single BellSouth access tandem destined to third party tandems such as an Independent Company tandem or other CLEC tandem. BellSouth originated Local Traffic, ISP-bound Traffic and IntraLATA Toll Traffic is transported on a separate single one-way trunk group terminating to Level 3. Other trunk groups for operator services, directory assistance, emergency services and intercept must be established pursuant to the applicable BellSouth tariff if service is requested. The LERG contains current routing and tandem serving arrangements. The basic Architecture is illustrated in Exhibit B.

4.13.1.2 **One-Way Trunk Group Architecture**

In one-way trunk group architecture, the Parties interconnect using three separate trunk groups. A one-way trunk group provides Intratandem Access for Level 3-originated Local Traffic, ISP-bound Traffic and IntraLATA Toll Traffic destined for BellSouth End Users. A second one-way trunk group carries BellSouth-originated Local Traffic, ISP-bound Traffic and IntraLATA Toll Traffic destined for Level 3 End-Users. A two-way trunk group provides Intratandem Access for Level 3's originating and terminating Transit Traffic. This trunk group carries Transit Traffic between Level 3 and Independent Companies, Interexchange Carriers, other CLECs, CMRS providers that have a Meet Point Billing arrangement with BellSouth, and other network providers with which Level 3 desires to exchange traffic. This trunk group also carries Level 3 originated Transit Traffic transiting a single BellSouth access tandem destined to third party tandems such as an Independent Company tandem or other CLEC tandem. BellSouth originated Local Traffic, ISP-bound Traffic and IntraLATA Toll Traffic is transported on a separate single one-way trunk group terminating to Level 3. Other trunk groups for operator services, directory assistance, emergency services and intercept must be established pursuant to the applicable BellSouth tariff if service is requested. The LERG contains current routing and tandem serving arrangements. The one-way trunk group architecture is illustrated in Exhibit C

4.13.1.3 **Two-Way Trunk Group Architecture**

The two-way trunk group Architecture establishes one two-way trunk group to provide Intratandem Access for the exchange of Local Traffic, ISP-bound Traffic

and IntraLATA Toll Traffic between Level 3 and BellSouth. In addition, a separate two-way transit trunk group must be established for Level 3's originating and terminating Transit Traffic. This trunk group carries Transit Traffic between Level 3 and Independent Companies, Interexchange Carriers, other CLECs, CMRS providers that have a Meet Point Billing arrangement with BellSouth, and other network providers with which Level 3 desires to exchange traffic. This trunk group also carries Level 3 originated Transit Traffic transiting a single BellSouth access tandem destined to third party tandems such as an Independent Company tandem or other CLEC tandem. BellSouth originated traffic may, in order to prevent or remedy traffic blocking situations, be transported on a separate single one-way trunk group terminating to Level 3. However, where Level 3 is responsive in a timely manner to BellSouth's transport needs for its originated traffic, BellSouth originating traffic will be placed on the two-way Local Traffic trunk group carrying ISP-bound Traffic and IntraLATA Toll Traffic. Other trunk groups for operator services, directory assistance, emergency services and intercept must be established pursuant to the applicable BellSouth tariff if service is requested. The LERG contains current routing and tandem serving arrangements. The two-way trunk group architecture is illustrated in Exhibit

D.

4.13.1.4 **Supergroup Architecture**

In the supergroup architecture, the Parties' Local Traffic, ISP-bound Traffic and IntraLATA Toll Traffic and Level 3's Transit Traffic are exchanged on a single two-way trunk group between Level 3 and BellSouth to provide Intratandem Access to Level 3. This trunk group carries Transit Traffic between Level 3 and Independent Companies, Interexchange Carriers, other CLECs, CMRS providers that have a Meet Point Billing arrangement with BellSouth, and other network providers with which Level 3 desires to exchange traffic. This trunk group also carries Level 3 originated Transit Traffic transiting a single BellSouth access tandem destined to third party tandems such as an Independent Company tandem or other CLEC tandem. BellSouth originated traffic may, in order to prevent or remedy traffic blocking situations, be transported on a separate single one-way trunk group terminating to Level 3. However, where Level 3 is responsive in a timely manner to BellSouth's transport needs for its originated traffic, BellSouth originating traffic will be placed on the Supergroup. Other trunk groups for operator services, directory assistance, emergency services and intercept must be established pursuant to the applicable BellSouth tariff if service is requested. The LERG contains current routing and tandem serving arrangements. The supergroup architecture is illustrated in Exhibit E

4.13.1.5 **Multiple Tandem Access Interconnection**

4.13.1.5.1 Where Level 3 does not choose access tandem interconnection at every BellSouth access tandem within a LATA, Level 3 may utilize BellSouth's multiple tandem

access interconnection (MTA) for , Local Traffic and ISP-bound Traffic traffic originated from Level 3. To utilize MTA Level 3 must establish an interconnection trunk group(s) at a BellSouth access tandem through multiple BellSouth access tandems within the LATA as required. BellSouth will route Level 3's originated Local Traffic, ISP-bound Traffic and IntraLATA Toll Traffic for LATA wide transport and termination. Level 3 must also establish an interconnection trunk group(s) at all BellSouth access tandems where Level 3 NXXs are homed as described in Section 4.3 above. If Level 3 does not have NXXs homed at any particular BellSouth access tandem within a LATA and elects not to establish an interconnection trunk group(s) at such BellSouth access tandem, Level 3 can order MTA in each BellSouth access tandem within the LATA where it does have an interconnection trunk group(s) and BellSouth will terminate Level 3's Local Traffic, ISP-bound Traffic and IntraLATA Toll Traffic to End-Users served through those BellSouth access tandems where Level 3 does not have an interconnection trunk group(s). MTA shall be provisioned in accordance with BellSouth's Ordering Guidelines

4.13.1.5.2 Level 3 may also utilize MTA to route its originated Transit Traffic; provided, however, that MTA may not be utilized to route switched access traffic that transits the BellSouth network to an Interexchange Carrier (IXC). Switched access traffic originated by or terminated to Level 3 will be delivered to and from IXCs based on Level 3's NXX access tandem homing arrangement as specified by Level 3 in the LERG.

4.13.1.5.3 Level 3 shall compensate BellSouth for MTA used to switch and transport Level 3's originating traffic at the applicable tandem switching and transport charges specified in Exhibit A to this Attachment. These charges shall be billed in addition to any Call Transport and Termination charges. BellSouth shall not charge for MTA used to switch and transport BellSouth's originating traffic.

4.13.1.5.4 To the extent Level 3 does not purchase MTA in a LATA served by multiple access tandems, Level 3 must establish an interconnection trunk group(s) to every access tandem in the LATA to serve the entire LATA. To the extent Level 3 routes its traffic in such a way that utilizes BellSouth's MTA service without properly ordering MTA, Level 3 shall pay BellSouth the associated MTA charges, but only with respect to Level 3 originated traffic.

4.13.2 **Local Tandem Interconnection**

4.13.2.1.1 Local Tandem Interconnection arrangement allows Level 3 to establish an interconnection trunk group(s) at BellSouth local tandems for: (1) the delivery of Level 3-originated Local Traffic, ISP-bound Traffic and IntraLATA Toll Traffic transported and terminated by BellSouth to BellSouth end offices served by those BellSouth local tandems, and (2) for local Transit Traffic transported by BellSouth for third party network providers who have also established an interconnection trunk group(s) at those BellSouth local tandems.

4.13.2.1.2 When a specified local calling area is served by more than one BellSouth local tandem, Level 3 must designate a "home" local tandem for each of its assigned NPA/NXXs and establish trunk connections to such local tandems. Additionally, Level 3 may choose to establish an interconnection trunk group(s) at the BellSouth local tandems where it has no codes homing but is not required to do so. Level 3 may deliver Local Traffic, ISP-bound Traffic and IntraLATA Toll Traffic to a "home" BellSouth local tandem that is destined for other BellSouth or third party network provider end offices subtending other BellSouth local tandems in the same local calling area where Level 3 does not choose to establish an interconnection trunk group(s). It is Level 3's responsibility to enter its own NPA/NXX local tandem homing arrangements into the LERG either directly or via a vendor in order for other third party network providers to determine appropriate traffic routing to Level 3's codes. Likewise, Level 3 shall obtain its routing information from the LERG

4.13.2.2 Notwithstanding establishing an interconnection trunk group(s) to BellSouth's local tandems, Level 3 must also establish an interconnection trunk group(s) to BellSouth access tandems within the LATA on which Level 3 has NPA/NXXs homed for the delivery of Interexchange Carrier Switched Access (SWA) and toll traffic, and traffic to Type 2A CMRS connections located at the access tandems. BellSouth shall not switch SWA traffic through more than one BellSouth access tandem. SWA, Type 2A CMRS or toll traffic routed to the local tandem in error will not be backhauled to the BellSouth access tandem for completion. (Type 2A CMRS interconnection is defined in BellSouth's A35 General Subscriber Services Tariff).

4.13.2.3 BellSouth's provisioning of Local Tandem Interconnection assumes that Level 3 has executed the necessary local interconnection agreements with the other third party network providers subtending those local tandems to the extent required by the Act.

4.13.3 **Direct End Office-to-End Office Interconnection**

4.13.3.1.1 Direct End Office-to-End Office one-way or two-way interconnection trunk groups allow for the delivery of a Party's originating Local Traffic, ISP-bound Traffic and IntraLATA Toll Traffic to the terminating Party on a direct end office-to-end office basis

4.13.3.2 The Parties shall utilize direct end office-to-end office trunk groups subject to the requirements with respect to establishment of and responsibility for IPs as set forth herein, under any one of the following conditions:

4.13.3.2.1 Tandem Exhaust - If a tandem through which the Parties are interconnected is unable to, or is forecasted to be unable to support additional traffic loads for any period of time, the Parties will mutually agree on an end office trunking plan that

will alleviate the tandem capacity shortage and ensure completion of traffic between Level 3 and BellSouth.

4.13.3.2.2 Traffic Volume –To the extent either Party has the capability to measure the amount of traffic between Level 3's switch and a BellSouth end office and where such traffic exceeds or is forecasted to exceed a single DS1 of traffic per month for three consecutive months, then the Parties shall install and retain direct end office trunking sufficient to handle such traffic volumes. Either Party will install additional capacity between such points when overflow traffic exceeds or is forecasted to exceed a single DS1 of traffic per month. In the case of one-way trunking, additional trunking shall only be required by the Party whose trunking has achieved the preceding usage threshold.

4.13.3.2.3 Mutual Agreement - The Parties may install direct end office trunking upon mutual agreement in the absence of conditions (1) or (2) above.

4.13.4 **Transit Traffic Trunk Group**

Transit Traffic trunks can either be two-way trunks or two one-way trunks ordered by Level 3 to deliver and receive Transit Traffic. Establishing Transit Traffic trunks at BellSouth access and local tandems provides intratandem access to the third parties also interconnected at those tandems.

4.13.4.1 **Toll Free Traffic**

4.13.4.1.1 If Level 3 chooses BellSouth to perform the Service Switching Point (SSP) Function (i.e., handle Toll Free database queries) from BellSouth's switches, all Level 3 originating Toll Free traffic will be routed over the Transit Traffic Trunk Group and shall be delivered using GR-394 format. Carrier Code "0110" and Circuit Code (to be determined for each LATA) shall be used for all such calls.

4.13.4.1.2 Either Party may choose to perform its own Toll Free database queries from its switch. In such cases, the originating party will determine the nature (local/intraLATA/interLATA) of the Toll Free call (local/IntraLATA/InterLATA) based on the response from the database. If the call is a local or intraLATA Toll Free call between the Parties, the originating Party will route the post-query local or IntraLATA converted ten-digit local number to the other Party over the local or intraLATA trunk group. If the call is a local or intraLATA Toll Free call destined for a third party (ICO, IXC, CMRS or other CLEC), , the originating party will route the post-query local or intraLATA converted ten-digit local number to the transiting party over the Transit Traffic Trunk Group and the originating party shall provide to the transiting party a Toll Free billing record when appropriate. If the query reveals the call is an interLATA Toll Free call, the originating party will route the post-query interLATA Toll Free call (1) directly from its switch for carriers interconnected with its network or (2) over the Transit Traffic Trunk Group to carriers that are not directly connected to the originating party's network but that are connected to the transiting party's access tandem.

4.13.5 All post-query Toll Free calls for which Level 3 performs the SSP function, if delivered to BellSouth, shall be delivered using GR-394 format for calls destined to IXCs, and GR-317 format for calls destined to end offices that directly subtend a BellSouth access tandem within the LATA.

## 5. NETWORK DESIGN AND MANAGEMENT FOR INTERCONNECTION

5.1 Network Management and Changes. The Parties will exchange toll-free maintenance contact numbers and escalation procedures. The Parties will provide public notice of network changes in accordance with applicable federal and state rules and regulations.

5.2 Interconnection Technical Standards. The interconnection of all networks will be based upon accepted industry/national guidelines for transmission standards and traffic blocking criteria. Interconnecting facilities shall conform, at a minimum, to the telecommunications industry standard of DS-1 pursuant to Telcordia Standard No. TR-NWT-00499. Where Level 3 chooses to utilize Signaling System 7 signaling, also known as Common Channel Signaling (SS7), SS7 connectivity is required between the Level 3 switch and the BellSouth Signaling Transfer Point (STP). BellSouth will provide SS7 signaling using Common Channel Signaling Access Capability in accordance with the technical specifications set forth in the BellSouth Guidelines to Technical Publication, TR-TSV-000905. Facilities of each Party shall provide the necessary on-hook, off-hook answer and disconnect supervision and shall provide calling number ID (Calling Party Number) when technically feasible. At such time as Level 3 has definite plans to directly interconnect its signaling network with BellSouth's signaling network, upon Level 3's written request, the Parties agree to meet to negotiate the appropriate compensation methodology for such local signal messaging.

5.3 Quality of Interconnection. The local interconnection for the transmission and routing of telephone exchange service and exchange access that each Party provides to each other will be nondiscriminatory in nature in accordance with applicable federal and state law, and will be at least equal in quality to what it provides to itself and any subsidiary or affiliate, where technically feasible, or to any other Party to which each Party provides local interconnection.

5.4 Network Management Controls. Both Parties will work cooperatively to apply sound network management principles by invoking appropriate network management controls (e.g., call gapping) to alleviate or prevent network congestion.

5.5 SS7 Signaling. Both Parties will utilize LEC-to-LEC SS7 Signaling, where available, in conjunction with all traffic in order to enable full interoperability of CLASS features and functions except for call return. All SS7 signaling parameters will be provided, including but not limited to automatic number identification (ANI), originating line information (OLI) calling company category and charge

number. All privacy indicators will be honored, and the Parties will exchange Transactional Capabilities Application Part (TCAP) messages to facilitate full interoperability of SS7-based features between the respective networks. Neither Party shall alter the SS7 parameters, or be a party to altering such parameters, or knowingly pass SS7 parameters that have been altered in order to circumvent appropriate interconnection charges.

5.6 Signaling Call Information. BellSouth and Level 3 will send and receive 10 digits for Local Traffic and ISP- Bound Traffic . Additionally, BellSouth and Level 3 will exchange the proper call information, i.e. originated call company number and destination call company number, CIC, and OZZ, including all proper translations for routing between networks and any information necessary for billing

5.7 **Forecasting for Trunk Provisioning**

5.7.1 Within six (6) months after execution of this Agreement, Level 3 shall provide an initial interconnection trunk group forecast for each LATA in which it plans to provide service within BellSouth's region. Upon receipt of Level 3's forecast, the Parties shall conduct a joint planning meeting to develop a joint interconnection trunk group forecast. Each forecast provided under this Section shall be deemed "Confidential Information" under the General Terms and Conditions of this Agreement.

5.8 At a minimum, the forecast shall include the projected quantity of Transit Trunks, Level 3-to-BellSouth one-way trunks (Level 3 Trunks), BellSouth-to-Level 3 one-way trunks (BellSouth Trunk Groups) and/or two-way interconnection trunks, if the Parties have agreed to interconnect using two-way trunking to transport the Parties' Local Traffic, ISP-Bound Traffic, and IntraLATA Toll Traffic. The quantities shall be projected for a minimum of six months and shall include an estimate of the current year plus the next two years total forecasted quantities. The Parties shall mutually develop BellSouth Trunk Groups and/or two-way interconnection trunk forecast quantities

5.8.1.1 All forecasts shall include, at a minimum, Access Carrier Terminal Location (ACTL), trunk group type (local/intraLATA toll, Transit, Operator Services, 911, etc.), A location/Z location (CLLI codes for Level 3 location and BellSouth location where the trunks shall terminate), interface type (e.g., DS1), Direction of Signaling, Trunk Group Number, if known, (commonly referred to as the 2-6 code) and forecasted trunks in service each year (cumulative).

5.8.2 Once initial interconnection trunk forecasts have been developed, Level 3 shall continue to provide interconnection trunk forecasts on a semiannual basis or at otherwise mutually agreeable intervals. Level 3 shall use commercially reasonable efforts to make the forecasts as accurate as possible based on reasonable engineering criteria and prior operating history between the companies, where

applicable. The Parties shall continue to develop BellSouth Trunk Group and/or two-way interconnection trunk forecasts as described in Section 5.7.1.1.

5.8.3 The submitting and development of interconnection trunk forecasts shall not replace the ordering process for local interconnection trunks. Each Party shall exercise its best efforts to provide the quantity of interconnection trunks mutually forecasted. However, the provision of the forecasted quantity of interconnection trunks is subject to trunk terminations and facility capacity existing at the time the trunk order is submitted. Furthermore, the receipt and development of trunk forecasts does not imply any liability for failure to perform if capacity (trunk terminations or facilities) is not available for use at the forecasted time.

5.9 **Trunk Utilization**

5.9.1 For the BellSouth Trunk Groups that are Final Trunk Groups (BellSouth Final Trunk Groups), BellSouth and Level 3 shall monitor traffic on each interconnection BellSouth Final Trunk Group that is ordered and installed. The Parties agree that the BellSouth Final Trunk Groups will be utilized at 60 percent (60%) of the time consistent busy hour utilization level within 90 days of installation. The Parties agree that the BellSouth Final Trunk Groups will be utilized at eighty percent (80%) of the time consistent busy hour utilization level within 180 days of installation. Any BellSouth Final Trunk Group not meeting the minimum thresholds set forth in this Section are defined as "Under-utilized" trunks. Pursuant to the process set forth in Section 5.8.1.1 following, BellSouth may disconnect any Under-utilized BellSouth Final Trunk Groups and Level 3 shall refund to BellSouth the associated nonrecurring and recurring trunk and facility charges paid by BellSouth, if any.

5.9.1.1 BellSouth's CISC will notify Level 3 of any under-utilized Reciprocal Trunk Groups and the number of such trunk groups that BellSouth wishes to disconnect. BellSouth will provide supporting information either by email or facsimile to the designated Level 3 interface. Level 3 will provide concurrence with the disconnection in seven (7) business days or will provide specific information supporting why the trunks should not be disconnected. Such supporting information should include expected traffic volumes (including traffic volumes generated due to Local Number Portability) and the timeframes within which Level 3 expects to need such trunks. BellSouth's CISC Project Manager and Circuit Capacity Manager will discuss the information with Level 3 to determine if agreement can be reached on the number of BellSouth Final Trunk Groups to be removed. If no agreement can be reached, the Parties will utilize the Dispute Resolution process set forth in this Agreement.

5.9.2 For the two-way trunk groups, BellSouth and Level 3 shall monitor traffic on each interconnection trunk group that is ordered and installed. The Parties agree that within 90 days of the installation of the BellSouth two-way trunk or trunks, the trunks will be utilized at 60 percent (60%) of the time consistent busy hour

utilization level. The Parties agree that within 180 days of the installation of a trunk or trunks, the trunks will be utilized at eighty percent (80%) of the time consistent busy hour utilization level. Any trunk or trunks not meeting the minimum thresholds set forth in this Section are defined as "Under-utilized" trunks. Pursuant to the process set forth in Section 5.8.3.1 following, BellSouth will request the disconnection of any Under-utilized two-way trunk(s) and Level 3 shall refund to BellSouth the associated nonrecurring and recurring trunk and facility charges paid by BellSouth, if any.

5.9.2.1 BellSouth's LISC will notify Level 3 of any under-utilized two-way trunk groups and the number of trunks that BellSouth wishes to disconnect. BellSouth will provide supporting information either by email or facsimile to the designated Level 3 interface. Level 3 will provide concurrence with the disconnection in seven (7) business days or will provide specific information supporting why the two-way trunks should not be disconnected. Such supporting information should include expected traffic volumes (including traffic volumes generated due to Local Number Portability) and the timeframes within which Level 3 expects to need such trunks. BellSouth's CISC Project Manager and Circuit Capacity Manager will discuss the information with Level 3 to determine if agreement can be reached on the number of trunks to be removed. If no agreement can be reached, the Parties will utilize the Dispute Resolution process set forth in this Agreement

5.8.3.2 To the extent that any interconnection trunk group is utilized at a time-consistent busy hour of greater than eighty percent (80%), unless otherwise mutually agreed, the Parties shall augment the trunk groups as soon as commercially reasonable in order to bring the utilization to eighty percent (80%).

## 6. LOCAL DIALING PARITY

6.1 BellSouth and Level 3 shall provide local and toll dialing parity, as defined in FCC rules and regulations, with no unreasonable dialing delays. Dialing parity shall be provided for all originating telecommunications services that require dialing to route a call.

## 7. INTERCONNECTION COMPENSATION

### 7.1 Compensation for Call Transportation and Termination for Local Traffic, ISP-bound Traffic, and IntraLATA Toll Traffic.

7.1.1 For purposes of this Attachment and for intercarrier compensation between the Parties Local Traffic is defined as any call that originates in one exchange and terminates in either the same exchange, or other local calling area associated with the originating exchange as defined and specified in Section A3 of BellSouth's General Subscriber Service Tariff.

7.1.1.1 Additionally, Local Traffic includes any cross boundary, voice-to-voice intrastate, interLATA or interstate, interLATA calls established as a local call by the ruling regulatory body.

7.1.2 ISP-bound Traffic is defined as calls to an information service provider or Internet service provider (ISP) that are dialed by using a local dialing pattern (7 or 10 digits)

7.1.3 Notwithstanding the definitions of Local Traffic and ISP-bound traffic above, and pursuant to the FCC's Order on Remand and Report and Order in CC Docket 99-68 released April 27, 2001 (ISP Order on Remand), BellSouth and Level 3 agree to the rebuttable presumption that all combined circuit switched Local and ISP-bound Traffic delivered to BellSouth or Level 3 that exceeds a 3:1 ratio of terminating to originating traffic on a statewide basis shall be considered ISP-bound traffic for compensation purposes. BellSouth and Level 3 further agree to the rebuttable presumption that all combined circuit switched Local and ISP-bound Traffic delivered to BellSouth or Level 3 that does not exceed a 3:1 ratio of terminating to originating traffic on a statewide basis shall be considered Local Traffic for compensation purposes.

7.2 The Parties shall compensate each other for the Call Transport and Termination of Local Traffic and ISP-Bound Traffic at the rate of $0.0007 per minute of use. For ISP-bound Traffic exchanged from the Effective Date of this Agreement until the expiration date of this Agreement, the Parties agree to apply the growth caps set forth in the FCC's ISP Order on Remand or as otherwise mutually agreed.

7.2.1 Any ISP-bound Traffic that exceeds the minute of use caps described above shall be exchanged on a bill and keep basis, and no compensation shall be paid to the terminating Party therefore for minutes of use.

7.2.2 Except as otherwise stated in this Agreement, nothing shall prevent Level 3 from purchasing, acquiring or otherwise obtaining and integrating the Local Traffic and ISP-bound Traffic switching operations or accounts of a third party telecommunications carrier into Level 3's business. BellSouth shall not be responsible for paying any more, and BellSouth reserves its right to argue that it should pay less, than the reciprocal compensation BellSouth may have otherwise been billed for with respect to such telecommunications carrier prior to the transaction by Level 3.

7.2.3 The appropriate elemental rates set forth in Exhibit A of this Attachment shall apply for Transit Traffic as described in Sections and below and to Multiple Tandem Access as described in Section above.

7.2.4 The Parties have been unable to agree as to the appropriate compensation for calls which originate in a LATA and terminate to a physical location outside of that LATA but to a number assigned to a rate center within that LATA. However,

without prejudice to either Party's position concerning the application of reciprocal compensation or access charges to such traffic, the Parties agree for purposes of this Agreement only and on an interim basis until the FCC issues an Order addressing this issue, neither Party shall bill the other for any compensation in connection with the exchange of any traffic as described in the first sentence of this paragraph. Once the FCC issues an Effective Order addressing this issue, the Parties agree to amend this Interconnection Agreement to comply with the Order on a prospective basis only within 30 days of either Party's written request to amend the Agreement. No "true-up" shall be required in connection with such an Effective Order. Nothing in this Section 7.2.4 affects the obligations imposed on the Parties to compensate each other for Local Traffic and ISP-bound Traffic as those terms are defined in this Attachment. In the event of a conflict between this Section and the BellSouth Jurisdictional Factors Guide attached hereto, this Section controls

7.3 **Jurisdictional Reporting**

7.3.1 **Percent Local Use.** Each Party shall report to the other a Percent Local Usage (PLU) factor. The application of the PLU will determine the amount of local or ISP-bound minutes to be billed to the other Party. Each Party shall update its PLU on the first of January, April, July and October of the year and shall send it to the other Party to be received no later than 30 days after the first of each such month based on local and ISP-bound usage for the past three months ending the last day of December, March, June and September, respectively. Requirements associated with PLU calculation and reporting shall be as set forth in BellSouth's Jurisdictional Factors Reporting Guide attached hereto as Exhibit F, as it is amended from time to time as mutually agreed by the Parties.

7.3.1.1 **Percent Local Facility.** Each Party shall report to the other a Percent Local Facility (PLF) factor. The application of the PLF will determine the portion of switched dedicated transport to be billed per the local jurisdiction rates. The PLF shall be applied to Multiplexing, Local Channel and Interoffice Channel Switched Dedicated Transport utilized in the provision of local interconnection trunks. Each Party shall update its PLF on the first of January, April, July and October of the year and shall send it to the other Party to be received no later than 30 days after the first of each such month to be effective the first bill period the following month, respectively. Requirements associated with PLU and PLF calculation and reporting shall be as set forth in BellSouth's Jurisdictional Factors Reporting Guide, attached hereto as Exhibit F, as it is amended from time to time as mutually agreed by the Parties.

7.3.2 **Percent Interstate Usage**. Each Party shall report to the other the projected Percent Interstate Usage (PIU) factor. Requirements associated with PIU calculation and reporting shall be as set forth in BellSouth's Jurisdictional Factors Reporting Guide, attached hereto as Exhibit F as it is amended from time to time

as mutually agreed by the Parties. After interstate and intrastate traffic percentages have been determined by use of PIU procedures, the PLU and PLF factors will be used for application and billing of local interconnection. Each Party shall update its PIUs on the first of January, April, July and October of the year and shall send it to the other Party to be received no later than 30 days after the first of each such month, for all services showing the percentages of use for the past three months ending the last day of December, March, June and September.

7.3.3 Notwithstanding the provisions in Section 7.3.1, 7.3.2, and 7.3.3 above, where the terminating Party has message recording technology that identifies the jurisdiction of traffic terminated as defined in this Agreement, such information shall, at the terminating Party's option, be utilized to determine the appropriate jurisdictional reporting factors (PLU, PIU, and/or PLF), in lieu of those provided by the originating Party. In the event that the terminating Party opts to utilize its own data to determine jurisdictional reporting factors, such terminating Party shall notify the originating Party at least 15 days prior to the beginning of the calendar quarter in which the terminating Party will begin to utilize its own data. Such factors shall subject to the Dispute Resolution provisions in this Agreement, as well as the Audit provisions set forth in 7.3.5 below.

7.3.4 **Audits.** On thirty (30) days written notice, each Party must provide the other the ability and opportunity to conduct an annual audit to ensure the proper billing of traffic. BellSouth and Level 3 shall retain records of call detail for a minimum of nine months from which the PLU, PLF and/or PIU can be ascertained. The audit shall be conducted during normal business hours at an office designated by the Party being audited. Audit requests shall not be submitted more frequently than one (1) time per calendar year. Audits shall be performed by a mutually acceptable independent auditor paid for by the Party requesting the audit. The PLF, PLU and/or PIU shall be adjusted based upon the audit results and shall apply for the quarter the audit was completed, for the quarter prior to the completion of the audit, and for the two quarters following the completion of the audit. If, as a result of an audit, either Party is found to have overstated the PLF, PLU and/or PIU by twenty percentage points (20%) or more, that Party shall reimburse the auditing Party for the cost of the audit.

7.4 **Compensation for 8XX Traffic**

7.4.1 The parties have been unable to agree as to the appropriate compensation to be paid for 8YY calls bearing translated NPA-NXX codes to NPA-NXX codes that are local to the point where the traffic is handed off will be rated as Local Traffic . Accordingly, each Party reserves its rights to dispute through the Billing Dispute process in Attachment 7, Section 2 of this Agreement whether the appropriate compensation to be paid for 8YY calls bearing translated NPA-NXX codes to NPA-NXX codes that are local to the point where the traffic is handed off should

be rated as Local Traffic. Notwithstanding the foregoing, each Party will pay the other Party the database query charge as set forth in the applicable Party's intrastate or interstate switched access tariffs as applicable, as filed and effective with the FCC or Commission

7.4.2 Records for 8XX Billing. Each Party will provide to the other the appropriate records necessary for billing 8XX customers. The records provided will be in a standard EMI format.

7.4.3 8XX Access Screening. BellSouth's provision of 8XX Toll Free Dialing (TFD) to Level 3 requires interconnection from Level 3 to BellSouth's 8XX Signal Channel Point (SCP). Such interconnections shall be established pursuant to BellSouth's Common Channel Signaling Interconnection Guidelines and Telcordia's CCS Network Interface Specification document, TR-TSV-000905. Level 3 shall establish SS7 interconnection at the BellSouth Local Signal Transfer Points serving the BellSouth 8XX SCPs that Level 3 desires to query. The terms and conditions for 8XX TFD are set out in BellSouth's Intrastate Access Services Tariff.

7.5 **Mutual Provision of Switched Access Service**

7.5.1 Switched Access Traffic Switched Access Traffic is defined as telephone calls requiring local transmission and switching services for the purpose of the origination or termination of Telephone Toll Service. Switched Access Traffic includes the following types of traffic: Feature Group A, Feature Group B, Feature Group C, Feature Group D, toll free access (e.g., 800/877/888), 900 access, and their successors or similar Switched Exchange Access Services.

7.5.1.1 The Parties agree that phone-to-phone calls that utilize Voice-Over-Internet Protocol ("VOIP") and which calls originate and terminate on the circuit switched telephone network -i.e., originate and terminate in time division multiplexing format (TDM) format - in different local calling areas, but which is transported using Internet protocol between those points, constitutes telecommunications traffic and is Switched Access Traffic and properly subject to the effective intrastate and interstate switched access tariffs of the originating and terminating carriers.

7.5.1.2 The Parties have been unable to agree as to whether computer-to-phone and phone-to-computer -VOIP transmissions which cross different local calling area boundaries constitute Switched Access Traffic ("Disputed VoIP"). Notwithstanding the foregoing, and without waiving any rights with respect to either Party's position as to the jurisdictional nature of Disputed VOIP, the Parties agree to abide by any effective and applicable FCC rules and orders regarding the

nature of such traffic and the compensation payable by the Parties for such traffic, if any.

7.5.1.3 The Parties agree that this section 7.5.1, shall expire six months after the Effective Date of this Agreement. During the period between the Effective Date of the Agreement and the expiration of this section 7.5.1, the Parties will continue to negotiate how intercarrier compensation for Disputed VoIP will be treated to reach a mutually agreeable resolution. If, as of the expiration of this section, the Parties have not yet reached such a resolution then a request for negotiation pursuant to Section 252(b)(1) as to the subject matter of this section 7.5.1 will be deemed to have been automatically provided by BellSouth one hundred and thirty-five days prior to the expiration of this section. Both Parties have the period between the one hundred and thirty-fifth day and the one hundred and sixtieth day (inclusive) to file a timely petition with the respective state public service commission. This section shall continue in effect for the period from the one hundred and thirty-fifth day and the one hundred and sixtieth day (inclusive) in order to file a timely petition with the respective state public service commission. Nothing in the section 7.5.1 shall be interpreted to prevent the Parties from mutually agreeing to extend the termination date for expiration of this section and the concomitant automatic date of the request for negotiations.

7.5.1.4 Except as otherwise provided in this agreement, during the effective time and after the expiration of this Section, 7.2.4, neither Party will take any action to disconnect, impair, block, fail to provision, fail to support or otherwise degrade the quality of Disputed VoIP.

7.5.2 If the BellSouth End User chooses Level 3 as their presubscribed interexchange carrier, or if the BellSouth End User uses Level 3 as an interexchange carrier on a 101XXXX basis, BellSouth will charge Level 3 the appropriate BellSouth tariff charges for originating switched access services.

7.5.3 Where the originating Party delivers a call to the terminating Party over switched access facilities, the originating Party will pay the terminating Party terminating, switched access charges as set forth in the terminating Party's FCC or Commission filed and effective Access Services Tariff, as appropriate.

7.5.4 When Level 3's end office switch provides an access service connection to or from an interexchange carrier (IXC) by a direct trunk group to the IXC utilizing BellSouth facilities, each Party will provide its own access services to the IXC and bill on a multi-bill, multi-tariff meet-point basis. Each Party will bill its own access services rates to the IXC with the exception of the interconnection charge. The interconnection charge will be billed by Level 3 as the Party providing the end office function. Each party will use the Multiple Exchange Carrier Access Billing (MECAB) guidelines to establish meet point billing for all applicable traffic. The Parties shall utilize a thirty (30) day billing period.

7.5.4.1 When Level 3's end office subtends the BellSouth Access Tandem switch for receipt or delivery of switched access traffic and provides an access service connection to or from an IXC via BellSouth's Access Tandem switch, BellSouth, as the tandem company agrees to provide to Level 3, as the End Office Company, as defined in MECAB, at no charge, all the switched access detail usage data, recorded at the access tandem, within no more than sixty (60) days after the recording date. Each Party will notify the other when it is not feasible to meet these requirements. As business requirements change, data reporting requirements may be modified as necessary.

7.5.5 BellSouth, as the tandem provider company, will retain for a minimum period of sixty (60) days, access message detail sufficient to recreate any data that is lost or damaged by the tandem provider company or any third party involved in processing or transporting data.

7.5.6 BellSouth, as the tandem provider company, agrees to recreate the lost or damaged data within forty-eight (48) hours of notification by the other or by an authorized third party handling the data.

7.5.7 Any claims against BellSouth, as the tandem provider company, for unbillable or uncollectible revenue should be filed with the tandem provider company within 120 days of the usage date.

7.5.8 BellSouth, as the tandem provider company shall keep records of its billing activities relating to jointly-provided Intrastate and Interstate access services in sufficient detail to permit the Subsequent Billing Party to, by formal or informal review or audit, to verify the accuracy and reasonableness of the jointly-provided access billing data provided by the Initial Billing Party. Each Party agrees to cooperate in such formal or informal reviews or audits and further agrees to jointly review the findings of such reviews or audits in order to resolve any differences concerning the findings thereof.

7.6 **Transit Traffic**

7.6.1 BellSouth shall provide tandem switching and transport services for Level 3's Transit Traffic. Rates for local Transit Traffic and ISP-bound Transit Traffic shall be the applicable Call Transport and Termination charges as set forth in Exhibit A to this Attachment. Rates for Switched Access Transit Traffic shall be the applicable charges as set forth in the applicable BellSouth Switched Access tariff. Billing associated with all Transit Traffic shall be pursuant to MECAB guidelines. Traffic between Level 3 and Wireless Type 1 third parties shall not be treated as Transit Traffic from a routing or billing perspective. Traffic originated by a Wireless Type 1 third party or a third party CLEC utilizing BellSouth switching (including resellers and UNE-P providers) shall be treated as BellSouth-originated traffic and BellSouth shall compensate Level 3 for transport and termination of such traffic in accordance with the terms of this Attachment. Traffic between Level

3 and Wireless Type 2A or a third party CLEC utilizing BellSouth switching shall not be treated as Transit Traffic from a routing or billing perspective until BellSouth and the Wireless Type 2A carrier or a third party CLEC utilizing BellSouth switching have the capability to properly meet-point-bill in accordance with MECAB guidelines. Until such time as such meet point billing is established, traffic originated by Wireless Type 2A third parties or a third party CLEC utilizing BellSouth switching shall be treated as BellSouth-originated traffic and BellSouth shall compensate Level 3 for transport and termination of such traffic in accordance with the terms of this Attachment.

7.6.2 The delivery of traffic that transits the BellSouth network and is transported to another carrier's network is excluded from any BellSouth billing guarantees. BellSouth agrees to deliver Transit Traffic to the terminating carrier; provided, however, that Level 3 is solely responsible for negotiating and executing any appropriate contractual agreements with the terminating carrier for the exchange of Transit Traffic through the BellSouth network. BellSouth will not be liable for any compensation to the terminating carrier or to Level 3, subject to Section 7.5.1 above. In the event that the terminating third party carrier imposes on BellSouth any charges or costs for the delivery of Level 3-originated Transit Traffic, Level 3 shall reimburse BellSouth for such costs. Additionally, the Parties agree that any billing to a third party or other telecommunications carrier under this section shall be pursuant to MECAB procedures.

7.6.3 If and when Level 3 acts as a transit carrier for BellSouth's Transit Traffic, this Section shall apply. Level 3 shall provide tandem switching and transport services for BellSouth's Transit Traffic. Rates for Local Transit Traffic and ISP-bound Transit Traffic shall be the applicable Call Transport and Termination charges as set forth in Exhibit A to this Attachment. Rates for Switched Access Transit Traffic shall be the applicable charges as set forth in the applicable Level 3's Switched Access tariff, as filed and effective with the FCC or Commission. Level 3 agrees to deliver Transit Traffic to the terminating carrier; provided, however, that BellSouth is solely responsible for negotiating and executing any appropriate contractual agreements with the terminating carrier for the exchange of Transit Traffic through the Level 3 network. Level 3 will not be liable for any compensation to the terminating carrier or to BellSouth, In the event that the terminating third party carrier imposes on Level 3 any charges or costs for the delivery of BellSouth-originated Transit Traffic, BellSouth shall reimburse Level 3 for such costs. Additionally, the Parties agree that any billing to a third party or other telecommunications carrier under this section shall be pursuant to MECAB procedures

Exhibit B

# Basic Architecture

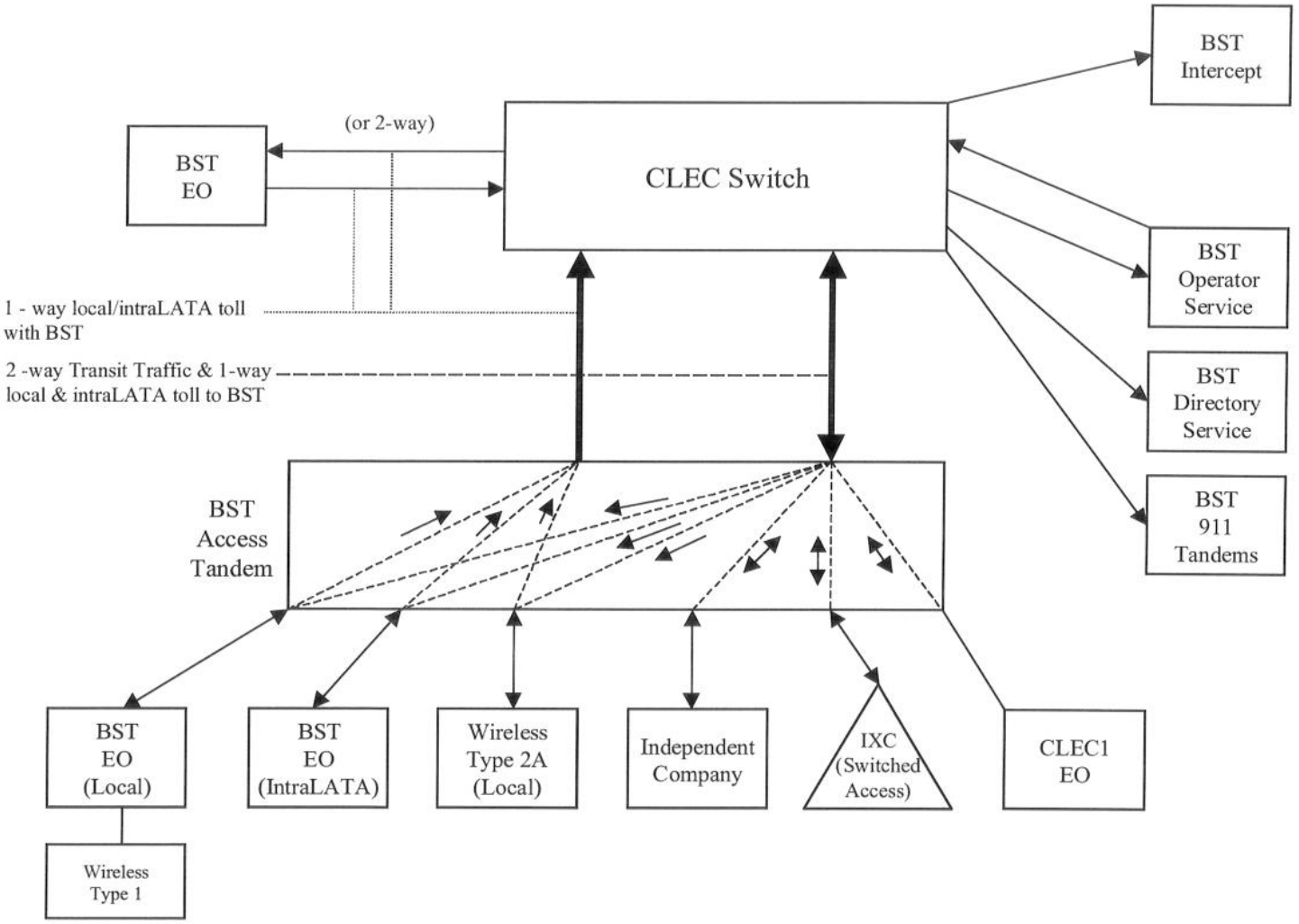

Exhibit C

# One-Way Architecture

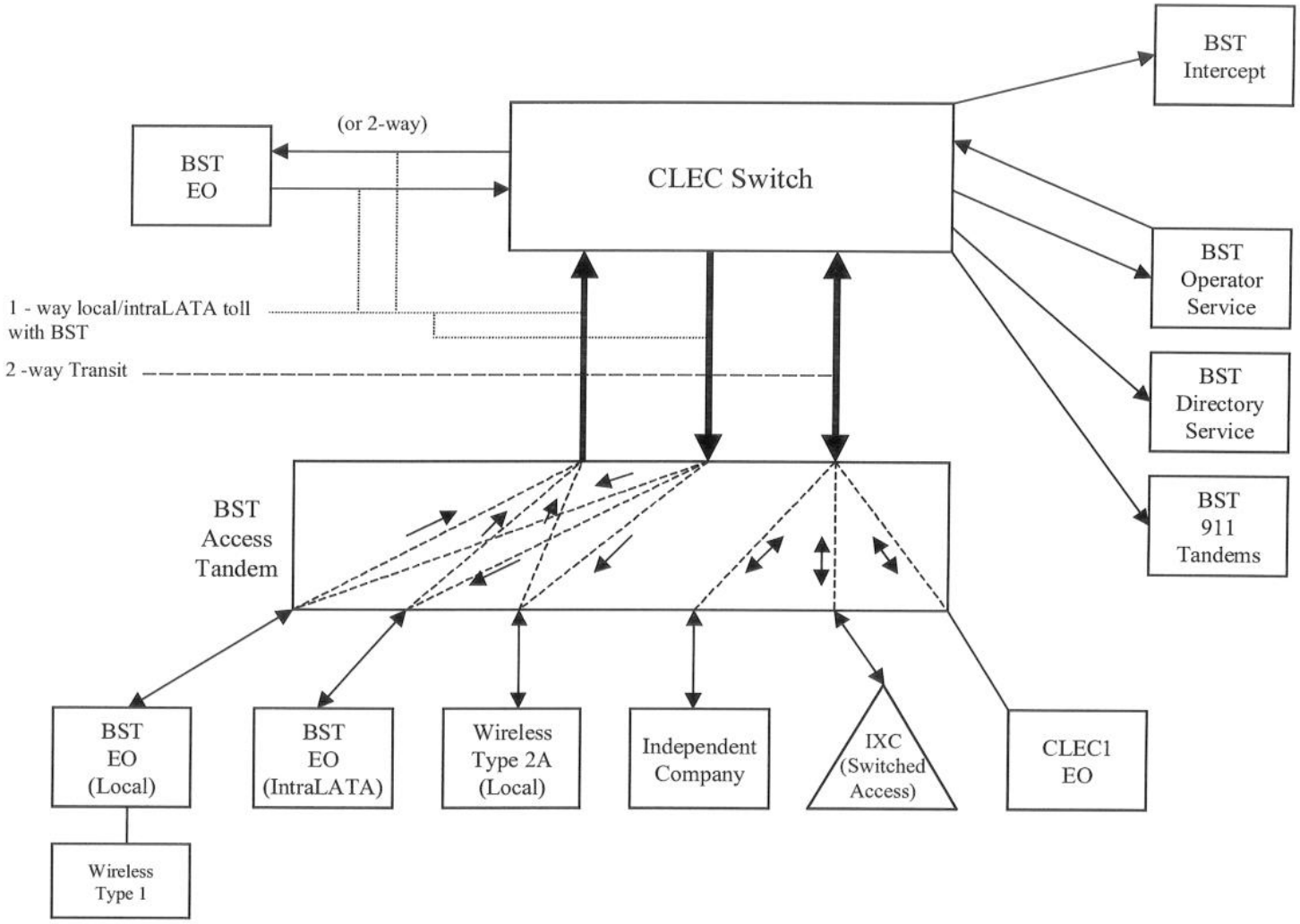

Exhibit D

# Two-Way Architecture

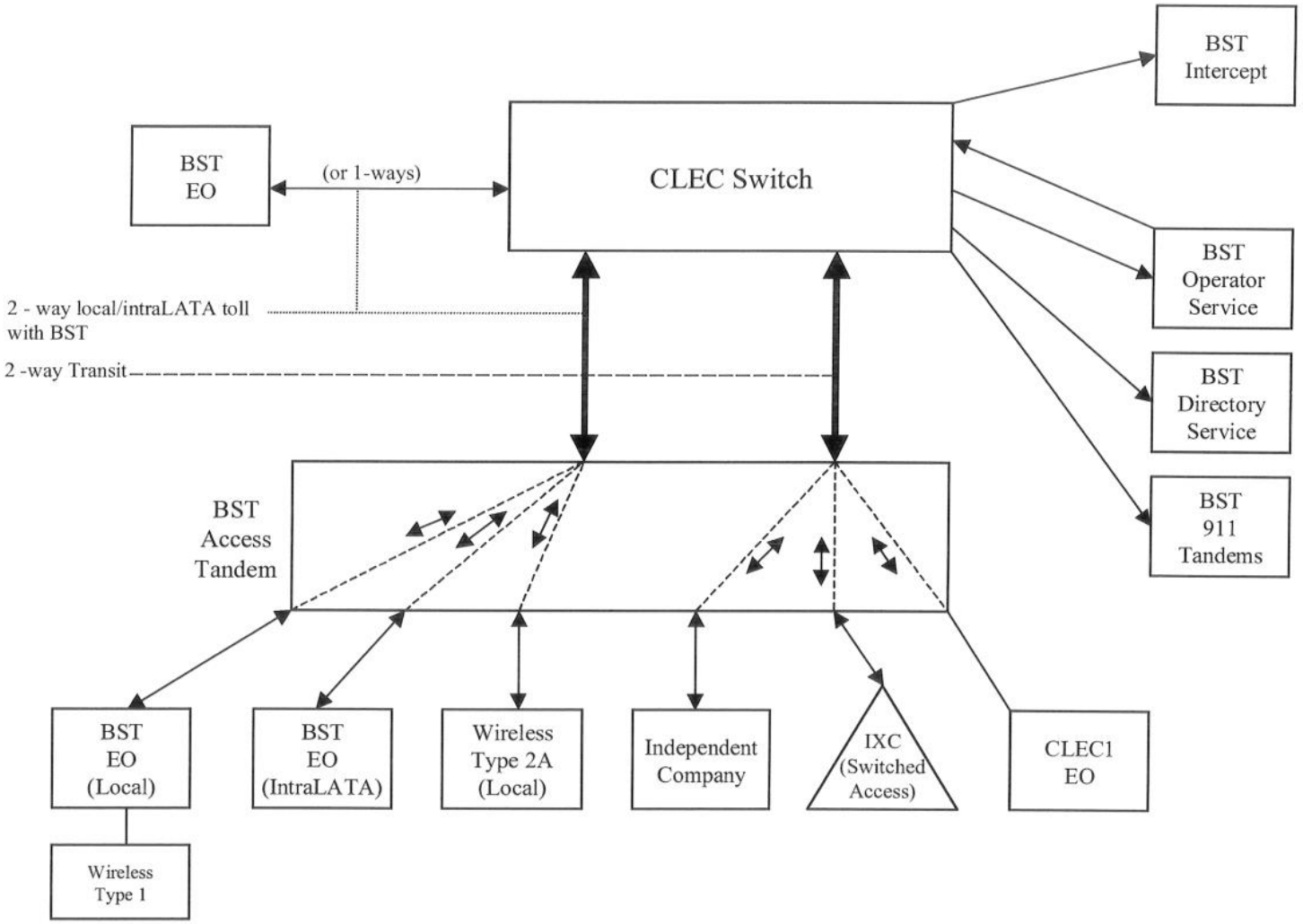

Exhibit E

# Supergroup Architecture

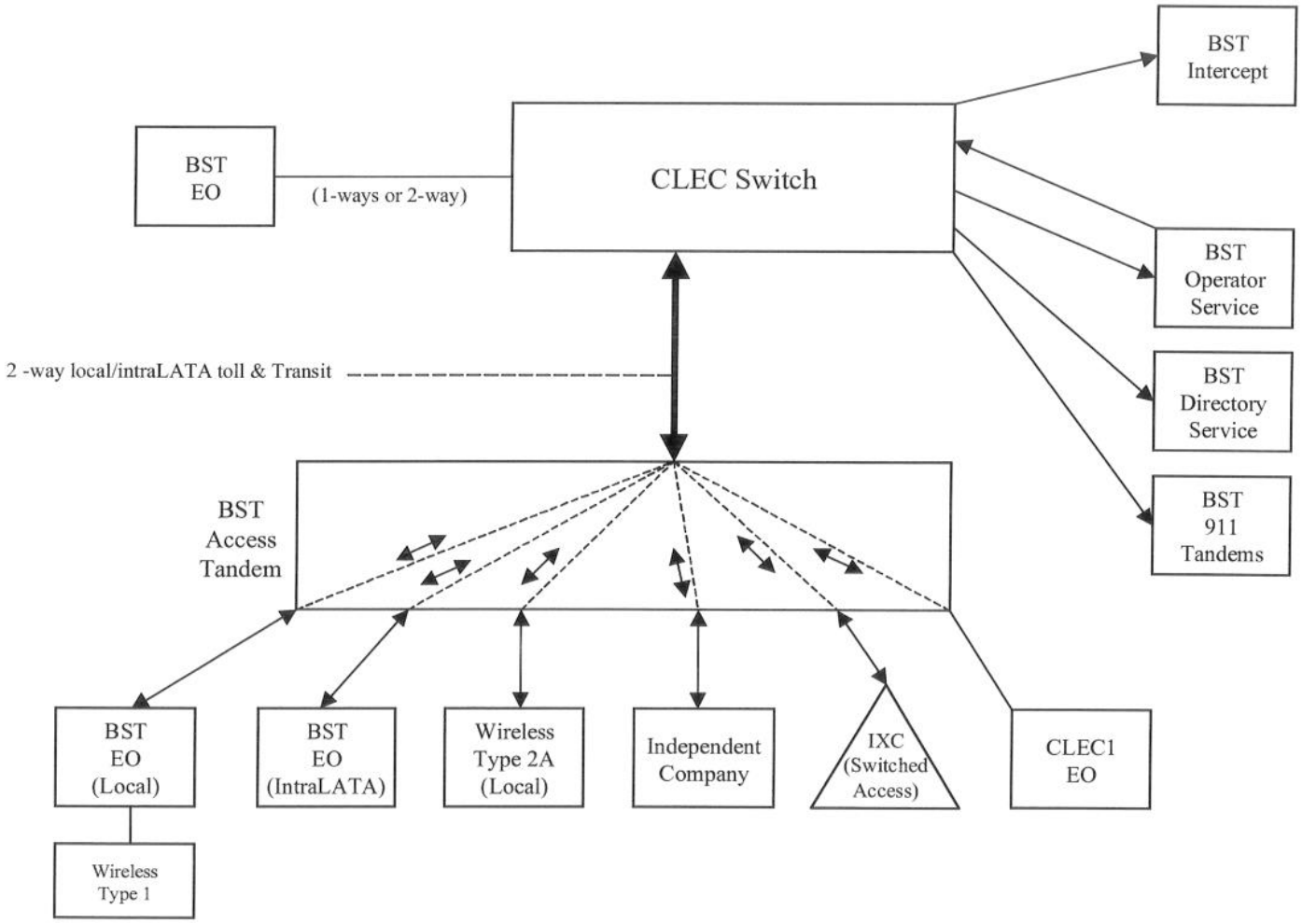

BELLSOUTH

# BellSouth Jurisdictional Factors Reporting Guide

## Issue 5.0

## December 3, 2003

BELLSOUTH

# Table of Contents


Revisions..... 3

1.0 Introduction..... 4
2.0 Jurisdictions..... 4
3.0 Factors..... 5
3.1 General..... 5
3.2 PIU - Percent Interstate Usage..... 6
3.3 PLU - Percent Local Usage..... 7
3.4 PLF - Percent Local Facility..... 7
4.0 Service Reporting Requirements..... 8
4.1 BellSouth Switched Access (SWA) Feature Group A (FGA) PIU (PIUA)... 8
4.2 BellSouth SWA FGB PIU (PIUB)..... 9
4.3 BellSouth SWA FGD & Local Terminating PIU (TPIU)..... 9
4.4 BellSouth Local Interconnection PLU..... 9
4.5 BellSouth SWA 500 PIU (ZP15)..... 10
4.6 BellSouth SWA 700 Access Service (ZP17)..... 10
4.7 BellSouth SWA 8XX Toll Free Dialing Ten Digit Screening (ZP18)..... 10
4.8 BellSouth SWA 900 Service (ZP19)..... 10
4.9 BellSouth SWA Transport PIUE..... 10
4.10 BellSouth Local Interconnection Transport PLF..... 11
4.11 BellSouth CCS7 Access Arrangements SPIU/SPLU..... 11
4.12 BellSouth Line Information Data Base Service LIDB..... 12
5.0 Report Process..... 12
6.0 Frequency of Reporting..... 13
7.0 Audits..... 14
7.1 Audit Request..... 14
7.2 Audit Compliance..... 14
8.0 Ordering..... 15

# Revisions

**Issue 1.0**

The initial version of the *BellSouth Jurisdictional Factors Reporting Guide* was issued on August 15, 2001.

**Issue 2.0**

Incorporated references to *RF-3995 Jurisdictional Factor Report Form* – issued on December 21, 2001.

**Issue 3.0**

Added minor clarification concerning value to be used if PLF or PLU factors are not reported – issued on August 2, 2002.

**Issue 4.0**

Added Clarification concerning reporting of SPIU Factor and added language describing SPLU Factor and calculation of intrastate of non-local traffic – issued on October 17, 2002.

**Issue 5.0**

Revised the e-mail address that is utilized to report jurisdictional factors by electronic mail – issued on December 3, 2003.

# *BellSouth Jurisdictional Factors Reporting Guide*

## 1.0 Introduction

Jurisdictional factors are utilized to apportion the billing of BellSouth Access and Local Interconnections Services between the interstate, intrastate and local jurisdictions. The rates, terms and conditions applicable to the provision of services are determined based upon the jurisdictional use of the service. Where sufficient data is available BellSouth will determine the percentage of use by jurisdiction for billing applications in accordance with BellSouth tariffs and contractual agreements. Absent sufficient data it is incumbent upon BellSouth customers to accurately report jurisdictional factors in order for BellSouth to bill the associated services per contractual and regulatory requirements. This document serves as a supplemental guide to the BellSouth tariffs and contracts for the preparation and reporting of the following jurisdictional factors related to Access and Local Interconnection Services

PIU - Percent Interstate Usage
PLU - Percent Local Usage
PLF - Percent Local Facility

These factors are reported by service at a state level as required. Unique service requirements are identified later in this Guide. In general, the PIU factors are required for Access Services and Local Interconnection Services to apportion the billing between the state and interstate jurisdictions. Competitive Local Exchange Carriers (CLECs) are also required to report PLU and PLF factors in addition to PIU factors to further apportion their intrastate use of Local Interconnection services between the state and local jurisdiction. Failure to report values for PLU and/or PLF shall result in the default value of zero percent being applied for these factors. The local jurisdiction is considered a subset of the intrastate jurisdiction in the determination and application of the PLU and PLF factors. The following sections provide information concerning the determination of factors, the application of factors, reporting procedures and customer records requirements. This information is provided as an aide in reporting jurisdictional factors and shall be used as a supplement to BellSouth Tariffs and/or contractual agreements with BellSouth.

## 2.0 Jurisdictions

There are three basic jurisdictions related to BellSouth Access and Local Interconnections Services. These are the Interstate, Intrastate and the Local jurisdiction. The jurisdiction is determined based upon the physical locations of the

origination and termination points of the communication. An ordinary voice communications telephone call that originates from a location that is in the same state

as the terminating number or called party shall be designated as an intrastate call and the minutes of use for that call shall be billed per the intrastate jurisdictional requirements. Conversely, a call that originates in a different state than the terminating location or called number shall be designated as interstate traffic. A call that originates and terminates within a local calling area as specified in the applicable contract or tariff is designated as local traffic.

The Jurisdiction of a call is determined solely by the location of the party initiating the call and the location of the called party. The origination and termination points are not necessarily determined based upon the carrier's network entry and exit points but rather on the origination and termination locations of the end users or the entities that are involved in the communications or information exchange. When multiple networks or carriers are involved, a particular carrier's transport of the service may be totally within a state boundary, however, the ultimate end points of the call or information exchange may be in different states. In this situation, the traffic shall be designated as interstate for all carriers even though a particular carrier's transport service begins and ends within a state boundary. In other words, jurisdiction of a call is determined solely by the locations of the originating and terminating parties and is not affected by the manner in which the call is routed through the telecommunications network.

The location of the origination or termination end points is determined based upon the location of the serving central offices. If a call terminates to an office that is associated with a LATA in an adjoining state (cross boundary) the call is considered to complete in the state where the central office is located.

## 3.0 Factors

### 3.1. General

BellSouth Jurisdictional factors are jurisdictional projections of the percentages of use of access and interconnection services for billing purposes. Factors shall be provided with the first request for each service in each state and are updated quarterly based upon the most recent three months of data. Factors for the initial request shall be reported via *RF-3995 Juridictional Factor Report* that is located at http://www.interconnection.bellsouth.com/forms/index.html, CLEC Forms Online or Interexchange Carrier Webforms. If factors are not updated then BellSouth will

assume that the percentages are the same as previously provided. If a valid quarterly report has never been received then BellSouth may utilize the factor(s) provided with the initial order for service, the most recent audit results if an audit has been performed or the default value for the particular factor. In cases where sufficient data is available then BellSouth will determine the factors to be utilized for billing.

### 3.2. PIU - Percent Interstate Usage

This factor is the percentage of use that is interstate. For services that are billed on a per minute of use (MOU) basis the PIU is based upon the traffic to and from the BellSouth Network. Further, depending upon the type of usage based service, the PIU may represent the percentage of both originating and terminating usage or may only represent the percentage of terminating usage that is jurisdictionally interstate. Any traffic that originates/terminates in the reporting carrier's network that ultimately originates/terminates to the BellSouth Network through another carrier's network shall be included in the reported PIU factor(s) by the intermediate carrier that accepts billing for the usage. This relationship is usually established per an agency authorization. In these situations, the carrier that accepts billing from BellSouth for the usage to and from BellSouth shall include such usage in their factor calculations that are reported to BellSouth. Any usage that transits a reporting carrier's network shall be included in the jurisdictional factor reporting by the billed carrier to the originating/terminating carrier regardless of the number of carriers involved in the transport of the traffic. It is incumbent upon the carrier that is billed for originating/terminating traffic to the BellSouth Network to report PIU factors to BellSouth that are representative of the actual jurisdiction of traffic delivered to BellSouth.

For services that are not billed on a usage sensitive basis (e.g. Switched Transport Local Channel, Interoffice Channels & Multiplexing Equipment) the total use of the service shall be considered in determining the PIU factors including originating and terminating usage to the BellSouth Network.

The PIU factor is calculated as follows where MOUs are billed minutes of use:

$$\frac{\textit{Total Interstate MOUs}}{\textit{Total Usage MOUs}}$$

*Total Usage* includes interstate, intrastate and local usage. This percentage is calculated on a statewide basis. Both Interexchange Carriers and Facility Based Competitive Local Exchange Carriers (CLECs) are required to report PIU factors per their Access Carrier Name Abbreviation (ACNA).

### 3.3. PLU – Percent Local Usage

This factor is the percentage of intrastate terminating usage that is categorized as Local Jurisdiction. For purposes of this guide the total intrastate usage includes intrastate local usage and intrastate non-local usage. The local jurisdiction is applicable to Competitive Local Exchange Carriers (CLECs) that are terminating local traffic from their network to the BellSouth network. CLECs that totally utilize resale or unbundled network elements to provision local services are not required to report PLU factors. Interexchange Carriers that do not terminate local traffic as a CLEC are not required to report PLU factors. Terminating party pays usage shall be excluded from the PLU calculations (same as TPIU, Section 4.3). The local jurisdiction is normally defined per Local Interconnection contractual agreements and is calculated as follows where MOUs are billed minutes of use:

$$\frac{\textit{Total Local Terminating MOUs}}{\textit{Total Intrastate Terminating MOUs}}$$

The total intrastate terminating minutes can be determined by multiplying the total terminating minutes by (1- TPIU). Therefore the PLU may also be calculated as follows:

$$\frac{\textit{Total Local Terminating MOUs}}{\textit{(Total Terminating MOUs)} \times \textit{(1-TPIU)}}$$

This factor is calculated on a statewide basis by Access Carrier Name Abbreviation (ACNA).

### 3.4. PLF – Percent Local Facility

The PLF is the percentage of the intrastate use of Switched Dedicated Transport and/or Local Interconnection Transport that is jurisdictionally local. This factor is similar to PLU except that it applies to dedicated transport services that are billed on a non-usage sensitive basis. Reporting of this factor is required by Facility Based CLECs utilizing BellSouth Local Interconnection transport services. Factors for the initial request shall be reported via *RF-3995 Jurisdictional Factor Report* (see http://www.interconnection.bellsouth.com/forms/index.html, CLEC Forms Online or Interexchange Carrier Webforms). In addition, IXCs that also function as a CLEC and utilize Switched Dedicated Transport and/or Local

Interconnection transport to interconnect with the Bellsouth Network for the exchange of local traffic are required to report a PLF. As with PIU factors for non-usage sensitive billed services, the total use of these services are considered in determining the factor (i.e. all originating and terminating usage). The PLF represents the percentage of use of all the Switched Dedicated Transport and Local Interconnection Transport provisioned by BellSouth that is jurisdictionally local as defined per contract or tariff. The PLF for these services is based upon the usage that is transported by these services as follows:

$$\frac{\textit{Total Local MOUs}}{\textit{Total Intrastate MOUs}}$$

The total intrastate minutes can be determined by multiplying the total minutes by (1- PIUE) where PIUE is the factor applicable to Switched Dedicated Transports and Local Interconnection Transport. Therefore the PLF may also be calculated as follows:

$$\frac{\textit{Total Local Minutes}}{\textit{(Total Minutes) x (1-PIUE)}}$$

This factor may is calculated on a statewide basis and reported per Access Carrier Name Abbreviation (ACNA).

## 4.0 Service Reporting Requirements

Jurisdictional factors shall be developed and reported for particular services as specified in the BellSouth Tariffs and as specified in applicable contracts that are provisioned for a carrier. Factor reporting requirements for these services are discussed in the following subsections.

### 4.1. BellSouth Switched Access (SWA) Feature Group A (FGA) PIU (PIUA)

Usage based rate elements are billed for FGA in both the originating and terminating directions. This usage shall be apportioned to the intrastate and interstate jurisdictions. A single PIU factor shall be reported at the state level to apportion all the applicable usage (both originating, terminating and transit) between the state and interstate jurisdictions. All usage received from or delivered to the BellSouth network and through the BellSouth Network to

connecting local exchange carriers shall be considered in the determination of the PIU for FGA.

### 4.2. BellSouth SWA FGB PIU (PIUB)

Usage based rate elements are billed for FGB in both the originating and terminating directions. This usage shall be apportioned to the state and interstate jurisdictions. A single PIU factor shall be reported at the state level to apportions all the applicable usage (both originating and terminating) based elements between the intrastate and interstate jurisdictions.

### 4.3. BellSouth SWA FGD & Local Terminating PIU (TPIU)

Usage based rate elements are billed for FGD in both the originating and terminating directions. BellSouth is able to determine the jurisdiction of originating FGD traffic per the billing records generated with each call. Therefore a factor to apportion usage for originating FGD traffic is not required from the reporting carrier. Originating traffic consists of calls where the location of the calling number is served from a BellSouth end office that is connecting to a carrier for completion to the called number location. The terminating usage shall be apportioned to the state and interstate jurisdictions per a TPIU factor. A single TPIU factor for terminating FGD traffic shall be reported at the state level to apportion the applicable usage based elements between the intrastate and interstate jurisdictions. Terminating party pays usage (e.g. 800 terminating traffic) shall be excluded from the TPIU calculations.

Local traffic shall also be included when determining the TPIU. If the reporting carrier functions as an Interexchange and Local carrier then all of the terminating usage sent to BellSouth will be apportioned between the state and interstate jurisdictions per a single TPIU. This factor shall be reported at the state level per Access Carrier Name Abbreviation (ACNA). A TPIU shall be reported by CLECs even if it does not terminate any interstate traffic to the BellSouth network. In this situation, the CLEC should report a TPIU equal to zero (0.00) to indicate that all of its traffic is Intrastate and Local.

### 4.4. BellSouth Local Interconnection PLU

The percent of usage to be billed per the Local Interconnection contracts is determined by the PLU factor. This factor shall be developed in conjunction with the TPIU factor discussed in the previous subsection. After the TPIU is

determined then the percentage of the intrastate usage that is local shall be determined. By definition, the percentage of intrastate traffic of the total terminating traffic is equal to 1 – TPIU. The total terminating traffic to be considered is discussed in the TPIU subsection. The PLU represents the percentage of intrastate terminating usage that is jurisdictionally local. This factor is reported at the state level by ACNA.

### 4.5. BellSouth SWA 500 PIU (ZP15)

The SWA 500 PIU factor will be applied to the carrier's originating 500 service MOUS and to the calls to apportion the usage and calls between state and interstate jurisdiction. This factor represents the percentage of originating 500 minutes and calls that are interstate jurisdiction.

### 4.6. BellSouth SWA 700 Access Service (ZP17)

The SWA 700 PIU factor will be applied to the carrier's originating 700 service MOUS to apportion the usage between state and interstate jurisdiction. This factor represents the percentage of originating 700 minutes that are interstate jurisdiction.

### 4.7. BellSouth SWA 8XX Toll Free Dialing Ten Digit Screening (ZP18)

The SWA 8XX PIU factor will be applied to the carrier's originating 8XX service MOUS and queries to apportion the usage and queries between the intrastate and interstate jurisdiction. This factor represents the percentage of originating 8XX minutes and queries that are interstate jurisdiction.

### 4.8. BellSouth SWA 900 Service (ZP19)

The SWA 900 PIU factor will be applied to the carrier's originating 900 service MOUS to apportion the usage between the intrastate and interstate jurisdiction. This factor represents the percentage of originating 900 minutes that are interstate jurisdiction.

### 4.9. BellSouth SWA Transport PIUE

BellSouth SWA Transport PIUE is applicable to the following SWA Transport Services:

SWA Local Channel
SWA Dedicated Interoffice Channels
SWA Channelization Equipment
Local Interconnection Dedicated Transport
Dedicated End Office Trunk Port Service
Dedicated Tandem End Office Trunk Port Service
SWA Expanded Interconnection Cross-Connects

The PIUE may also be applied to other flat rated charges not specifically covered by other PIU categories.

The utilization of these transport services is considered in combination to determine the PIUE factors. The PIUE will be applied to the recurring billing elements for these services to apportion billing between the intrastate and interstate jurisdictions. The total jurisdictional use of these services shall be considered when determining PIUE factors including all originating and terminating usage. The PIUE represents the percentage that these services are utilized for interstate jurisdiction applications.

### 4.10. BellSouth Local Interconnection Transport PLF

This factor is utilized to apportion the use of SWA Local Channel, SWA Dedicated Interoffice Channels, SWA Channelization Equipment, Local Interconnection Dedicated Transport, Tandem/End Office Ports and various other flat rated services to the Local Jurisdiction for billing purposes (per tariff and contractual agreements). This factor is developed in conjunction with the PIUE. The PLF represents the percentage of the Intrastate use of these services that is jurisdictionally Local whereby the Intrastate percentage is defined as 1-PIUE. The total jurisdictional use of these services shall be considered when determining PLF and should include originating and terminating traffic. This factor is reported at the state level by ACNA.

### 4.11.a. BellSouth CCS7 Access Arrangement SPIU

If a carrier has access to CCS7 Signaling Services monitoring software, then that carrier may use this software to identify the appropriate jurisdictional factors (SPIU/SPLU) on its signaling with BellSouth and report these factors in the same format detailed herein.

If, however, a carrier does not have access to CCS7 Signaling Services monitoring software, then as APIU for CCS7 Signaling Services shall be developed and reported based upon the associated billed minutes of use for SWA

Usage- based services. The billed minutes that are jurisdictionally ***interstate*** as a percentage of the total billed minutes shall be reported as the CCS7 Access SPIU.

### 4.11.a. BellSouth CCS7 Access Arrangement SPLU

If a carrier has access to CCS7 Signaling Services monitoring software, then that carrier may use this software to identify the appropriate jurisdictional factors (SPIU/SPLU) on its signaling with BellSouth and report these factors in the same format detailed herein.

If, however, a carrier does not have access to CCS7 Signaling Services monitoring software, then an SPLU for CCS7 Signaling Services shall be developed and reported based upon the associated billed minutes of use for SWA Usage based services and Local Interconnection services. The billed minutes that are jurisdictionally ***local*** as a percentage of the total *intrastate* billed minutes shall be reported as the CCS7 Access SPLU. Where the customer is a "Third Party Provider" of CCS7 Access services then the SPLU will be developed based upon a weighted average of all of that provider's "Third Party Customer's" end user traffic.

### 4.11.c. BellSouth CCS7 Access Arrangement: Special Note

In determining a factor for intrastate, ***non-local traffic,*** consider the following example:

Based on evaluating SWA usage-based services and local interconnection services, a BellSouth carrier customer has determined that its signaling traffic merits an SPIU of 80 and an SPLU of 60. As such, the following will then be true:

**80%** of the carrier's signaling messages will be billed as ***interstate.***
Of the remaining **20%,** 60% of the 20% (.60 x .20 = .12), **12%** will be billed as ***local***.

And, the final **8%** will be billed as ***intrastate, non-local.***

## 5. BellSouth Line Information Data Base Service LIDB

There are two factors reported for LIDB service, a PIU factor and a PCLU (Percent CLEC LIDB Usage). These factors are utilized to apportion the queries

to the LIDB Data Base between the interstate, intrastate and local jurisdiction. First, the total number of queries in the study period is determined and then the PCLU shall be calculated. The PCLU represents the percentage of LIDB queries that are jurisdictionally Local as a percentage of the total number of queries. The basic formula for the PCLU calculation is as follows:

$$\frac{\textit{Number of Local Queries}}{\textit{Total Number of Queries}}$$

After the PCLU is determined, the LIDB PIU shall be determined. The LIDB PIU represents the percentage of queries that are jurisdictionally interstate of the total number of queries minus the number of queries that are jurisdictionally local. The formula for the LIDB PIU is as follows:

$$\frac{\textit{Number of Interstate Queries}}{\textit{(Total Number of Queries)} - \textit{(Number of Local Queries)}}$$

## 5.0 Report Process

The following summarizes the major steps to develop and report jurisdictional factors:

- Install/modify systems to capture usage data with sufficient detail to accurately determine and aggregate the usage to the appropriate jurisdiction, by ACNA
- Create/Modify call detail records for traffic segregation to the appropriate service and jurisdiction
- Record and accumulate usage data
- Analyze usage data
- Calculate the factors
- Report the factors
- Maintain sufficient records of the data resources utilized to determine jurisdictional factors to comply with audit verification requirements as specified in the BellSouth Tariffs and applicable contractual agreements.

## 6.0 Frequency of Reporting

Jurisdictional factors shall be updated on a quarterly basis during the months of January, April, July and October. These updates shall be received no later than 30

days after the first day in each of these months. These factors shall represent the actual use for the three previous ending on the last day of December, March, June and September respectively. These updates shall be provided in writing by letter or electronic mail and sent to the following address:

US Mail

BellSouth Telecommunications, Inc
2300 Northlake Centre Drive
Suite 415
Tucker, GA 30084

OR

Electronic Mail

piu.reports@bellsouth.com

An e-mail will be returned indicating receipt of reports submitted by electronic mail. The recommended format for updates is via the online form *RF-3995 Jurisdictional Factor Report* (see http://www.interconnection.bellsouth.com/forms/index.html, CLEC Forms Online or Interexchange Carrier Webforms).

In those instances where BellSouth has sufficient information to calculate jurisdictional factors for itself, BellSouth will notify the carrier, by letter or email, of the factors that will be used in billing, as well as the effective date. Unless otherwise notified, BellSouth will continue to update the specific identified factor(s) for subsequent quarters per the above schedule and the carrier will be exempt from further responsibility to report those specific factors.

In the event the customer does not provide a projected jurisdictional factor(s) and BellSouth does not have sufficient information to develop the jurisdictional factor(s) then BellSouth may utilize the most recent audit results if an audit has been performed, the jurisdictional factor(s) provided with the initial order for service or a default value.

## 7.0 Audits

### 7.1. Audit Request

If BellSouth disputes a PIU factor provided by a carrier and BellSouth does not have sufficient information to calculate a PIU, BellSouth may initiate negotiations with the carrier in order to reconcile the factor differences and attempt to determine the correct PIU factor.

If negotiations are attempted and are not successful in producing an agreed PIU factor, BellSouth has the option per its access tariffs to initiate an independent, third party audit of the carrier's PIU factors and the process utilized in the development of PIU factors.

Upon 30 days written notice, BellSouth may initiate an audit to ensure proper billing of traffic. The audit will be performed by:

- An independent auditor under contract to BellSouth
- A mutually acceptable independent auditor paid for by BellSouth
- Or an independent auditor selected and paid for by the carrier

Call detail records from which the PIU can be ascertained shall be retained for a minimum of 6 months. The call detail records will be made available for inspection at an agreed upon location during normal business hours. If requested data is not provided within 30 days of the notice, the carrier shall be in violation of the Tariff. BellSouth will not submit more than one audit request per calendar year.

## 7.2. Audit Compliance

The factor shall be adjusted based upon the audit results. The audited factor shall be applied to the usage for the quarter the audit was completed, the quarter prior to the audit, and the two quarters following the completion of the audit. If the audited factor has a variance of 20% or more from the factor reported factor, the carrier shall reimburse BellSouth for the cost of the audit if the audit was paid for by BellSouth.

Two quarters after the quarter in which the audit was completed, the carrier may report a revised factor. If the revised factor denotes a deviation of 5% or more from the audited factor and the carrier is not able to justify this deviation to BellSouth's satisfaction, BellSouth has the option of requesting another audit.

The carrier may contest the audit within 30 days from the date the audit report has been furnished to the carrier.

## 8.0 Ordering

As stated in 3.1 preceding, BellSouth jurisdictional shall be provided with the initial request for each service in each state and quarterly thereafter. Factors for the initial request shall be reported via *RF-3995 Jurisdictional Factor Report* which is located at http://www.interconnection.bellsouth.com/forms/index.html, CLEC Forms Online or Interexchange Carrier Webforms. Failure to provide the appropriate factors with the initial request may result in delay of service. In the event that service is provided and the appropriate factors have not been received, a default factor may be used.

| LOCAL INTERCONNECTION - Alabama | | | | | | | | | | | | | Attachment: 3 | | Exhibit: A | |
|---|---|---|---|---|---|---|---|---|---|---|---|---|---|---|---|---|
| CATEGORY | RATE ELEMENTS | Interim | Zone | BCS | USOC | RATES ($) | | | | | Svc Order Submitted Elec per LSR | Svc Order Submitted Manually per LSR | Incremental Charge - Manual Svc Order vs. Electronic-1st | Incremental Charge - Manual Svc Order vs. Electronic-Add'l | Incremental Charge - Manual Svc Order vs. Electronic-Disc 1st | Incremental Charge - Manual Svc Order vs. Electronic-Disc Add'l |
| | | | | | | Rec | Nonrecurring | | Nonrecurring Disconnect | | OSS Rates ($) | | | | | |
| | | | | | | | First | Add'l | First | Add'l | SOMEC | SOMAN | SOMAN | SOMAN | SOMAN | SOMAN |
| LOCAL INTERCONNECTION (CALL TRANSPORT AND TERMINATION) | | | | | | | | | | | | | | | | |
| | NOTE: "bk" beside a rate indicates that the Parties have agreed to bill and keep for that element pursuant to the terms and conditions in Attachment 3. | | | | | | | | | | | | | | | |
| | INTERCARRIER COMPENSATION FOR LOCAL TRAFFIC AND ISP-BOUND TRAFFIC | | | | | | | | | | | | | | | |
| | Single rate for Local Traffic and ISP-bound Traffic per MOU | | | | | 0.0007 | | | | | | | | | | |
| | TANDEM SWITCHING | | | | | | | | | | | | | | | |
| | Tandem Switching Function Per MOU | | | OHD | | 0.000498 | | | | | | | | | | |
| | Multiple Tandem Switching, per MOU (applies to intial tandem only) | | | OHD | | 0.000498 | | | | | | | | | | |
| | Tandem Intermediary Charge, per MOU* | | | OHD | | 0.0025 | | | | | | | | | | |
| | * This charge is applicable only to transit traffic and is applied in addition to applicable switching and/or interconnection charges. | | | | | | | | | | | | | | | |
| | TRUNK CHARGE | | | | | | | | | | | | | | | |
| | Installation Trunk Side Service - per DS0 | | | OHD | TPP6X | | 21.56 | 8.12 | | | | | | | | |
| | Installation Trunk Side Service - per DS0 | | | OHD | TPP9X | | 21.56 | 8.12 | | | | | | | | |
| | Dedicated End Office Trunk Port Service-per DS0** | | | OHD | TDEOP | 0.00 | | | | | | | | | | |
| | Dedicated End Office Trunk Port Service-per DS1** | | | OH1 OH1MS | TDE1P | 0.00 | | | | | | | | | | |
| | Dedicated Tandem Trunk Port Service-per DS0** | | | OHD | TDWOP | 0.00 | | | | | | | | | | |
| | Dedicated Tandem Trunk Port Service-per DS1** | | | OH1 OH1MS | TDW1P | 0.00 | | | | | | | | | | |
| | ** This rate element is recovered on a per MOU basis and is included in the End Office Switching and Tandem Switching, per MOU rate elements | | | | | | | | | | | | | | | |
| | COMMON TRANSPORT (Shared) | | | | | | | | | | | | | | | |
| | Common Transport - Per Mile, Per MOU | | | OHD | | 0.0000023 | | | | | | | | | | |
| | Common Transport - Facilities Termination Per MOU | | | OHD | | 0.0003224 | | | | | | | | | | |
| LOCAL INTERCONNECTION (DEDICATED TRANSPORT) | | | | | | | | | | | | | | | | |
| | INTEROFFICE CHANNEL - DEDICATED TRANSPORT | | | | | | | | | | | | | | | |
| | Interoffice Channel - Dedicated Transport - 2-Wire Voice Grade - Per Mile per month | | | OHM | 1L5NF | 0.008838 | | | | | | | | | | |
| | Interoffice Channel - Dedicated Transport- 2- Wire Voice Grade - Facility Termination per month | | | OHM | 1L5NF | 21.13 | 40.54 | 27.41 | 16.74 | 6.90 | | | | | | |
| | Interoffice Channel - Dedicated Transport - 56 kbps - per mile per month | | | OHM | 1L5NK | 0.008838 | | | | | | | | | | |
| | Interoffice Channel - Dedicated Transport - 56 kbps - Facility Termination per month | | | OHM | 1L5NK | 15.12 | 40.54 | 27.41 | 16.74 | 6.90 | | | | | | |
| | Interoffice Channel - Dedicated Transport - 64 kbps - per mile per month | | | OHM | 1L5NK | 0.008838 | | | | | | | | | | |
| | Interoffice Channel - Dedicated Transport - 64 kbps - Facility Termination per month | | | OHM | 1L5NK | 15.12 | 40.54 | 27.41 | 16.74 | 6.90 | | | | | | |
| | Interoffice Channel - Dedicated Channel - DS1 - Per Mile per month | | | OH1, OH1MS | 1L5NL | 0.18 | | | | | | | | | | |
| | Interoffice Channel - Dedicated Tranport - DS1 - Facility Termination per month | | | OH1, OH1MS | 1L5NL | 60.16 | 89.27 | 81.81 | 16.35 | 14.44 | | | | | | |
| | Interoffice Channel - Dedicated Transport - DS3 - Per Mile per month | | | OH3, OH3MS | 1L5NM | 4.09 | | | | | | | | | | |
| | Interoffice Channel - Dedicated Transport - DS3 - Facility Termination per month | | | OH3, OH3MS | 1L5NM | 703.52 | 278.75 | 162.76 | 60.20 | 58.46 | | | | | | |
| | LOCAL CHANNEL - DEDICATED TRANSPORT | | | | | | | | | | | | | | | |
| | Local Channel - Dedicated - 2-Wire Voice Grade per month | | | OHM | TEFV2 | 13.97 | 193.10 | 33.17 | 36.64 | 3.20 | | | | | | |
| | Local Channel - Dedicated - 4-Wire Voice Grade per month | | | OHM | TEFV4 | 14.93 | 193.53 | 33.60 | 37.11 | 3.67 | | | | | | |
| | Local Channel - Dedicated - DS1 per month | | | OH1 | TEFHG | 35.76 | 177.47 | 153.72 | 22.19 | 15.26 | | | | | | |
| | Local Channel - Dedicated - DS3 Facility Termination per month | | | OH3 | TEFHJ | 416.54 | 451.52 | 263.94 | 119.49 | 83.58 | | | | | | |
| | LOCAL INTERCONNECTION MID-SPAN MEET | | | | | | | | | | | | | | | |
| | NOTE: If Access service ride Mid-Span Meet, one-half the tariffed service Local Channel rate is applicable. | | | | | | | | | | | | | | | |
| | Local Channel - Dedicated - DS1 per month | | | OH1MS | TEFHG | 0.00 | 0.00 | | | | | | | | | |
| | Local Channel - Dedicated - DS3 per month | | | OH3MS | TEFHJ | 0.00 | 0.00 | | | | | | | | | |
| | MULTIPLEXERS | | | | | | | | | | | | | | | |
| | Channelization - DS1 to DS0 Channel System | | | OH1, OH1MS | SATN1 | 101.06 | 91.04 | 62.57 | 10.54 | 9.79 | | | | | | |
| | DS3 to DS1 Channel System per month | | | OH3, OH3MS | SATNS | 166.13 | 178.14 | 93.97 | 33.26 | 31.63 | | | | | | |
| | DS3 Interface Unit (DS1 COCI) per month | | | OH1, OH1MS | SATCO | 12.70 | 6.58 | 4.72 | | | | | | | | |
| | Notes: If no rate is identified in the contract, the rates, terms, and conditions for the specific service or function will be as set forth in applicable BellSouth tariff. | | | | | | | | | | | | | | | |

| LOCAL INTERCONNECTION - Florida | | | | | | | | | | | | | Attachment: 3 | | Exhibit: A | |
|---|---|---|---|---|---|---|---|---|---|---|---|---|---|---|---|---|
| CATEGORY | RATE ELEMENTS | Interim | Zone | BCS | USOC | RATES ($) | | | | | Svc Order Submitted Elec per LSR | Svc Order Submitted Manually per LSR | Incremental Charge - Manual Svc Order vs. Electronic-1st | Incremental Charge - Manual Svc Order vs. Electronic-Add'l | Incremental Charge - Manual Svc Order vs. Electronic-Disc 1st | Incremental Charge - Manual Svc Order vs. Electronic-Disc Add'l |
| | | | | | | Rec | Nonrecurring | | Nonrecurring Disconnect | | OSS Rates ($) | | | | | |
| | | | | | | | First | Add'l | First | Add'l | SOMEC | SOMAN | SOMAN | SOMAN | SOMAN | SOMAN |
| LOCAL INTERCONNECTION (CALL TRANSPORT AND TERMINATION) | | | | | | | | | | | | | | | | |
| | NOTE: "bk" beside a rate indicates that the Parties have agreed to bill and keep for that element pursuant to the terms and conditions in Attachment 3. | | | | | | | | | | | | | | | |
| | INTERCARRIER COMPENSATION FOR LOCAL TRAFFIC AND ISP-BOUND TRAFFIC | | | | | | | | | | | | | | | |
| | Single rate for Local Traffic and ISP-bound Traffic per MOU | | | | | 0.0007 | | | | | | | | | | |
| | TANDEM SWITCHING | | | | | | | | | | | | | | | |
| | Tandem Switching Function Per MOU | | | OHD | | 0.0006019 | | | | | | | | | | |
| | Multiple Tandem Switching, per MOU (applies to intial tandem only) | | | OHD | | 0.0006019 | | | | | | | | | | |
| | Tandem Intermediary Charge, per MOU* | | | OHD | | 0.0025 | | | | | | | | | | |
| | * This charge is applicable only to transit traffic and is applied in addition to applicable switching and/or interconnection charges. | | | | | | | | | | | | | | | |
| | TRUNK CHARGE | | | | | | | | | | | | | | | |
| | Installation Trunk Side Service - per DS0 | | | OHD | TPP6X | | 21.73 | 8.19 | | | | | | | | |
| | Installation Trunk Side Service - per DS0 | | | OHD | TPP9X | | 21.73 | 8.19 | | | | | | | | |
| | Dedicated End Office Trunk Port Service-per DS0** | | | OHD | TDEOP | 0.00 | | | | | | | | | | |
| | Dedicated End Office Trunk Port Service-per DS1** | | | OH1 OH1MS | TDE1P | 0.00 | | | | | | | | | | |
| | Dedicated Tandem Trunk Port Service-per DS0** | | | OHD | TDWOP | 0.00 | | | | | | | | | | |
| | Dedicated Tandem Trunk Port Service-per DS1** | | | OH1 OH1MS | TDW1P | 0.00 | | | | | | | | | | |
| | ** This rate element is recovered on a per MOU basis and is included in the End Office Switching and Tandem Switching, per MOU rate elements | | | | | | | | | | | | | | | |
| | COMMON TRANSPORT (Shared) | | | | | | | | | | | | | | | |
| | Common Transport - Per Mile, Per MOU | | | OHD | | 0.0000035 | | | | | | | | | | |
| | Common Transport - Facilities Termination Per MOU | | | OHD | | 0.0004372 | | | | | | | | | | |
| LOCAL INTERCONNECTION (DEDICATED TRANSPORT) | | | | | | | | | | | | | | | | |
| | INTEROFFICE CHANNEL - DEDICATED TRANSPORT | | | | | | | | | | | | | | | |
| | Interoffice Channel - Dedicated Transport - 2-Wire Voice Grade - Per Mile per month | | | OHM | 1L5NF | 0.0091 | | | | | | | | | | |
| | Interoffice Channel - Dedicated Transport- 2- Wire Voice Grade - Facility Termination per month | | | OHM | 1L5NF | 25.32 | 47.35 | 31.78 | 18.31 | 7.03 | | | | | | |
| | Interoffice Channel - Dedicated Transport - 56 kbps - per mile per month | | | OHM | 1L5NK | 0.0091 | | | | | | | | | | |
| | Interoffice Channel - Dedicated Transport - 56 kbps - Facility Termination per month | | | OHM | 1L5NK | 18.44 | 47.35 | 31.78 | 18.31 | 7.03 | | | | | | |
| | Interoffice Channel - Dedicated Transport - 64 kbps - per mile per month | | | OHM | 1L5NK | 0.0091 | | | | | | | | | | |
| | Interoffice Channel - Dedicated Transport - 64 kbps - Facility Termination per month | | | OHM | 1L5NK | 18.44 | 47.35 | 31.78 | 18.31 | 7.03 | | | | | | |
| | Interoffice Channel - Dedicated Channel - DS1 - Per Mile per month | | | OH1, OH1MS | 1L5NL | 0.1856 | | | | | | | | | | |
| | Interoffice Channel - Dedicated Tranport - DS1 - Facility Termination per month | | | OH1, OH1MS | 1L5NL | 88.44 | 105.54 | 98.47 | 21.47 | 19.05 | | | | | | |
| | Interoffice Channel - Dedicated Transport - DS3 - Per Mile per month | | | OH3, OH3MS | 1L5NM | 3.87 | | | | | | | | | | |
| | Interoffice Channel - Dedicated Transport - DS3 - Facility Termination per month | | | OH3, OH3MS | 1L5NM | 1,071.00 | 335.46 | 219.28 | 72.03 | 70.56 | | | | | | |
| | LOCAL CHANNEL - DEDICATED TRANSPORT | | | | | | | | | | | | | | | |
| | Local Channel - Dedicated - 2-Wire Voice Grade per month | | | OHM | TEFV2 | 19.66 | 265.84 | 46.97 | 37.63 | 4.00 | | | | | | |
| | Local Channel - Dedicated - 4-Wire Voice Grade per month | | | OHM | TEFV4 | 20.45 | 266.54 | 47.67 | 44.22 | 5.33 | | | | | | |
| | Local Channel - Dedicated - DS1 per month | | | OH1 | TEFHG | 36.49 | 216.65 | 183.54 | 24.30 | 16.95 | | | | | | |
| | Local Channel - Dedicated - DS3 Facility Termination per month | | | OH3 | TEFHJ | 531.91 | 556.37 | 343.01 | 139.13 | 96.84 | | | | | | |
| | LOCAL INTERCONNECTION MID-SPAN MEET | | | | | | | | | | | | | | | |
| | NOTE: If Access service ride Mid-Span Meet, one-half the tariffed service Local Channel rate is applicable. | | | | | | | | | | | | | | | |
| | Local Channel - Dedicated - DS1 per month | | | OH1MS | TEFHG | 0.00 | 0.00 | | | | | | | | | |
| | Local Channel - Dedicated - DS3 per month | | | OH3MS | TEFHJ | 0.00 | 0.00 | | | | | | | | | |
| | MULTIPLEXERS | | | | | | | | | | | | | | | |
| | Channelization - DS1 to DS0 Channel System | | | OH1, OH1MS | SATN1 | 146.77 | 101.42 | 71.62 | 11.09 | 10.49 | | | | | | |
| | DS3 to DS1 Channel System per month | | | OH3, OH3MS | SATNS | 211.19 | 199.28 | 118.64 | 40.34 | 39.07 | | | | | | |
| | DS3 Interface Unit (DS1 COCI) per month | | | OH1, OH1MS | SATCO | 13.76 | 10.07 | 7.08 | | | | | | | | |
| | Notes: If no rate is identified in the contract, the rates, terms, and conditions for the specific service or function will be as set forth in applicable BellSouth tariff. | | | | | | | | | | | | | | | |

| LOCAL INTERCONNECTION - Georgia | | | | | | | | | | | | | Attachment: 3 | | Exhibit: A | |
|---|---|---|---|---|---|---|---|---|---|---|---|---|---|---|---|---|
| CATEGORY | RATE ELEMENTS | Interim | Zone | BCS | USOC | RATES ($) | | | | | Svc Order Submitted Elec per LSR | Svc Order Submitted Manually per LSR | Incremental Charge - Manual Svc Order vs. Electronic-1st | Incremental Charge - Manual Svc Order vs. Electronic-Add'l | Incremental Charge - Manual Svc Order vs. Electronic-Disc 1st | Incremental Charge - Manual Svc Order vs. Electronic-Disc Add'l |
| | | | | | | Rec | Nonrecurring | | Nonrecurring Disconnect | | OSS Rates ($) | | | | | |
| | | | | | | | First | Add'l | First | Add'l | SOMEC | SOMAN | SOMAN | SOMAN | SOMAN | SOMAN |
| LOCAL INTERCONNECTION (CALL TRANSPORT AND TERMINATION) | | | | | | | | | | | | | | | | |
| | NOTE: "bk" beside a rate indicates that the Parties have agreed to bill and keep for that element pursuant to the terms and conditions in Attachment 3. | | | | | | | | | | | | | | | |
| | INTERCARRIER COMPENSATION FOR LOCAL TRAFFIC AND ISP-BOUND TRAFFIC | | | | | | | | | | | | | | | |
| | Single rate for Local Traffic and ISP-bound Traffic per MOU | | | | | 0.0007 | | | | | | | | | | |
| | TANDEM SWITCHING | | | | | | | | | | | | | | | |
| | Tandem Switching Function Per MOU | | | OHD | | 0.0004086 | | | | | | | | | | |
| | Multiple Tandem Switching, per MOU (applies to intial tandem only) | | | OHD | | 0.0004086 | | | | | | | | | | |
| | Tandem Intermediary Charge, per MOU* | | | OHD | | 0.0025 | | | | | | | | | | |
| | * This charge is applicable only to transit traffic and is applied in addition to applicable switching and/or interconnection charges. | | | | | | | | | | | | | | | |
| | TRUNK CHARGE | | | | | | | | | | | | | | | |
| | Installation Trunk Side Service - per DS0 | | | OHD | TPP6X | | 21.53 | 8.11 | | | | | | | | |
| | Installation Trunk Side Service - per DS0 | | | OHD | TPP9X | | 21.53 | 8.11 | | | | | | | | |
| | Dedicated End Office Trunk Port Service-per DS0** | | | OHD | TDEOP | 0.00 | | | | | | | | | | |
| | Dedicated End Office Trunk Port Service-per DS1** | | | OH1 OH1MS | TDE1P | 0.00 | | | | | | | | | | |
| | Dedicated Tandem Trunk Port Service-per DS0** | | | OHD | TDWOP | 0.00 | | | | | | | | | | |
| | Dedicated Tandem Trunk Port Service-per DS1** | | | OH1 OH1MS | TDW1P | 0.00 | | | | | | | | | | |
| | ** This rate element is recovered on a per MOU basis and is included in the End Office Switching and Tandem Switching, per MOU rate elements | | | | | | | | | | | | | | | |
| | COMMON TRANSPORT (Shared) | | | | | | | | | | | | | | | |
| | Common Transport - Per Mile, Per MOU | | | OHD | | 0.0000027 | | | | | | | | | | |
| | Common Transport - Facilities Termination Per MOU | | | OHD | | 0.0001914 | | | | | | | | | | |
| LOCAL INTERCONNECTION (DEDICATED TRANSPORT) | | | | | | | | | | | | | | | | |
| | INTEROFFICE CHANNEL - DEDICATED TRANSPORT | | | | | | | | | | | | | | | |
| | Interoffice Channel - Dedicated Transport - 2-Wire Voice Grade - Per Mile per month | | | OHM | 1L5NF | 0.0057 | | | | | | | | | | |
| | Interoffice Channel - Dedicated Transport- 2- Wire Voice Grade - Facility Termination per month | | | OHM | 1L5NF | 12.87 | 48.455 | 19.48 | 16.575 | 4.995 | | | | | | |
| | Interoffice Channel - Dedicated Transport - 56 kbps - per mile per month | | | OHM | 1L5NK | 0.0057 | | | | | | | | | | |
| | Interoffice Channel - Dedicated Transport - 56 kbps - Facility Termination per month | | | OHM | 1L5NK | 7.83 | 48.455 | 19.48 | 16.575 | 4.995 | | | | | | |
| | Interoffice Channel - Dedicated Transport - 64 kbps - per mile per month | | | OHM | 1L5NK | 0.0057 | | | | | | | | | | |
| | Interoffice Channel - Dedicated Transport - 64 kbps - Facility Termination per month | | | OHM | 1L5NK | 7.83 | 48.455 | 19.48 | 16.575 | 4.995 | | | | | | |
| | Interoffice Channel - Dedicated Channel - DS1 - Per Mile per month | | | OH1, OH1MS | 1L5NL | 0.1154 | | | | | | | | | | |
| | Interoffice Channel - Dedicated Tranport - DS1 - Facility Termination per month | | | OH1, OH1MS | 1L5NL | 34.19 | 111.025 | 80.28 | 31.355 | 21.73 | | | | | | |
| | Interoffice Channel - Dedicated Transport - DS3 - Per Mile per month | | | OH3, OH3MS | 1L5NM | 2.53 | | | | | | | | | | |
| | Interoffice Channel - Dedicated Transport - DS3 - Facility Termination per month | | | OH3, OH3MS | 1L5NM | 342.02 | 320.47 | 86.32 | 66.77 | 52.81 | | | | | | |
| | LOCAL CHANNEL - DEDICATED TRANSPORT | | | | | | | | | | | | | | | |
| | Local Channel - Dedicated - 2-Wire Voice Grade per month | | | OHM | TEFV2 | 7.74 | 121.065 | 53.295 | 46.395 | 13.365 | | | | | | |
| | Local Channel - Dedicated - 4-Wire Voice Grade per month | | | OHM | TEFV4 | 8.72 | 125.62 | 54.43 | 46.395 | 13.365 | | | | | | |
| | Local Channel - Dedicated - DS1 per month | | | OH1 | TEFHG | 18.47 | 149.46 | 111.195 | 40.355 | 26.115 | | | | | | |
| | Local Channel - Dedicated - DS3 Facility Termination per month | | | OH3 | TEFHJ | 147.01 | 445.01 | 145.18 | 112.905 | 75.88 | | | | | | |
| | LOCAL INTERCONNECTION MID-SPAN MEET | | | | | | | | | | | | | | | |
| | NOTE: If Access service ride Mid-Span Meet, one-half the tariffed service Local Channel rate is applicable. | | | | | | | | | | | | | | | |
| | Local Channel - Dedicated - DS1 per month | | | OH1MS | TEFHG | 0.00 | 0.00 | | | | | | | | | |
| | Local Channel - Dedicated - DS3 per month | | | OH3MS | TEFHJ | 0.00 | 0.00 | | | | | | | | | |
| | MULTIPLEXERS | | | | | | | | | | | | | | | |
| | Channelization - DS1 to DS0 Channel System | | | OH1, OH1MS | SATN1 | 69.75 | 105.675 | 41.585 | 23.75 | 4.19 | | | | | | |
| | DS3 to DS1 Channel System per month | | | OH3, OH3MS | SATNS | 121.90 | 224.475 | 71.83 | 40.005 | 31.065 | | | | | | |
| | DS3 Interface Unit (DS1 COCI) per month | | | OH1, OH1MS | SATCO | 7.35 | 15.805 | 11.385 | 6.605 | 6.605 | | | | | | |
| | Notes: If no rate is identified in the contract, the rates, terms, and conditions for the specific service or function will be as set forth in applicable BellSouth tariff. | | | | | | | | | | | | | | | |

| LOCAL INTERCONNECTION - Kentucky | | | | | | | | | | | | | | Attachment: 3 | | Exhibit: A | |
|---|---|---|---|---|---|---|---|---|---|---|---|---|---|---|---|---|---|
| CATEGORY | RATE ELEMENTS | Interim | Zone | BCS | USOC | RATES ($) | | | | | Svc Order Submitted Elec per LSR | Svc Order Submitted Manually per LSR | Incremental Charge - Manual Svc Order vs. Electronic-1st | Incremental Charge - Manual Svc Order vs. Electronic-Add'l | Incremental Charge - Manual Svc Order vs. Electronic-Disc 1st | Incremental Charge - Manual Svc Order vs. Electronic-Disc Add'l |
| | | | | | | Rec | Nonrecurring | | Nonrecurring Disconnect | | OSS Rates ($) | | | | | |
| | | | | | | | First | Add'l | First | Add'l | SOMEC | SOMAN | SOMAN | SOMAN | SOMAN | SOMAN |
| LOCAL INTERCONNECTION (CALL TRANSPORT AND TERMINATION) | | | | | | | | | | | | | | | | |
| | NOTE: "bk" beside a rate indicates that the Parties have agreed to bill and keep for that element pursuant to the terms and conditions in Attachment 3. | | | | | | | | | | | | | | | |
| | INTERCARRIER COMPENSATION FOR LOCAL TRAFFIC AND ISP-BOUND TRAFFIC | | | | | | | | | | | | | | | |
| | Single rate for Local Traffic and ISP-bound Traffic per MOU | | | | | 0.0007 | | | | | | | | | | |
| | TANDEM SWITCHING | | | | | | | | | | | | | | | |
| | Tandem Switching Function Per MOU | | | OHD | | 0.0006772 | | | | | | | | | | |
| | Multiple Tandem Switching, per MOU (applies to intial tandem only) | | | OHD | | 0.0006772 | | | | | | | | | | |
| | Tandem Intermediary Charge, per MOU* | | | OHD | | 0.0025 | | | | | | | | | | |
| | * This charge is applicable only to transit traffic and is applied in addition to applicable switching and/or interconnection charges. | | | | | | | | | | | | | | | |
| | TRUNK CHARGE | | | | | | | | | | | | | | | |
| | Installation Trunk Side Service - per DS0 | | | OHD | TPP6X | | 21.58 | 8.13 | | | | | | | | |
| | Installation Trunk Side Service - per DS0 | | | OHD | TPP9X | | 21.58 | 8.13 | | | | | | | | |
| | Dedicated End Office Trunk Port Service-per DS0** | | | OHD | TDEOP | 0.00 | | | | | | | | | | |
| | Dedicated End Office Trunk Port Service-per DS1** | | | OH1 OH1MS | TDE1P | 0.00 | | | | | | | | | | |
| | Dedicated Tandem Trunk Port Service-per DS0** | | | OHD | TDWOP | 0.00 | | | | | | | | | | |
| | Dedicated Tandem Trunk Port Service-per DS1** | | | OH1 OH1MS | TDW1P | 0.00 | | | | | | | | | | |
| | ** This rate element is recovered on a per MOU basis and is included in the End Office Switching and Tandem Switching, per MOU rate elements | | | | | | | | | | | | | | | |
| | COMMON TRANSPORT (Shared) | | | | | | | | | | | | | | | |
| | Common Transport - Per Mile, Per MOU | | | OHD | | 0.000003 | | | | | | | | | | |
| | Common Transport - Facilities Termination Per MOU | | | OHD | | 0.0007466 | | | | | | | | | | |
| LOCAL INTERCONNECTION (DEDICATED TRANSPORT) | | | | | | | | | | | | | | | | |
| | INTEROFFICE CHANNEL - DEDICATED TRANSPORT | | | | | | | | | | | | | | | |
| | Interoffice Channel - Dedicated Transport - 2-Wire Voice Grade - Per Mile per month | | | OHM | 1L5NF | 0.01 | | | | | | | | | | |
| | Interoffice Channel - Dedicated Transport- 2- Wire Voice Grade - Facility Termination per month | | | OHM | 1L5NF | 29.11 | 47.34 | 31.78 | 22.77 | 8.75 | | | | | | |
| | Interoffice Channel - Dedicated Transport - 56 kbps - per mile per month | | | OHM | 1L5NK | 0.0115 | | | | | | | | | | |
| | Interoffice Channel - Dedicated Transport - 56 kbps - Facility Termination per month | | | OHM | 1L5NK | 20.97 | 47.35 | 31.78 | 22.77 | 8.75 | | | | | | |
| | Interoffice Channel - Dedicated Transport - 64 kbps - per mile per month | | | OHM | 1L5NK | 0.0115 | | | | | | | | | | |
| | Interoffice Channel - Dedicated Transport - 64 kbps - Facility Termination per month | | | OHM | 1L5NK | 20.97 | 47.35 | 31.78 | 22.77 | 8.75 | | | | | | |
| | Interoffice Channel - Dedicated Channel - DS1 - Per Mile per month | | | OH1, OH1MS | 1L5NL | 0.23 | | | | | | | | | | |
| | Interoffice Channel - Dedicated Tranport - DS1 - Facility Termination per month | | | OH1, OH1MS | 1L5NL | 96.04 | 105.52 | 98.46 | 23.09 | 20.49 | | | | | | |
| | Interoffice Channel - Dedicated Transport - DS3 - Per Mile per month | | | OH3, OH3MS | 1L5NM | 4.97 | | | | | | | | | | |
| | Interoffice Channel - Dedicated Transport - DS3 - Facility Termination per month | | | OH3, OH3MS | 1L5NM | 1,175.15 | 335.40 | 219.24 | 89.57 | 87.75 | | | | | | |
| | LOCAL CHANNEL - DEDICATED TRANSPORT | | | | | | | | | | | | | | | |
| | Local Channel - Dedicated - 2-Wire Voice Grade per month | | | OHM | TEFV2 | 18.57 | 265.78 | 46.96 | 46.79 | 4.98 | | | | | | |
| | Local Channel - Dedicated - 4-Wire Voice Grade per month | | | OHM | TEFV4 | 19.86 | 266.48 | 47.65 | 47.54 | 5.73 | | | | | | |
| | Local Channel - Dedicated - DS1 per month | | | OH1 | TEFHG | 40.46 | 209.60 | 176.51 | 30.21 | 21.07 | | | | | | |
| | Local Channel - Dedicated - DS3 Facility Termination per month | | | OH3 | TEFHJ | 576.05 | 551.38 | 338.08 | 173.00 | 120.42 | | | | | | |
| | LOCAL INTERCONNECTION MID-SPAN MEET | | | | | | | | | | | | | | | |
| | NOTE: If Access service ride Mid-Span Meet, one-half the tariffed service Local Channel rate is applicable. | | | | | | | | | | | | | | | |
| | Local Channel - Dedicated - DS1 per month | | | OH1MS | TEFHG | 0.00 | 0.00 | | | | | | | | | |
| | Local Channel - Dedicated - DS3 per month | | | OH3MS | TEFHJ | 0.00 | 0.00 | | | | | | | | | |
| | MULTIPLEXERS | | | | | | | | | | | | | | | |
| | Channelization - DS1 to DS0 Channel System | | | OH1, OH1MS | SATN1 | 113.33 | 101.40 | 71.60 | 13.79 | 13.04 | | | | | | |
| | DS3 to DS1 Channel System per month | | | OH3, OH3MS | SATNS | 158.20 | 199.23 | 118.62 | 50.16 | 48.59 | | | | | | |
| | DS3 Interface Unit (DS1 COCI) per month | | | OH1, OH1MS | SATCO | 11.80 | 10.07 | 7.08 | | | | | | | | |
| | Notes: If no rate is identified in the contract, the rates, terms, and conditions for the specific service or function will be as set forth in applicable BellSouth tariff. | | | | | | | | | | | | | | | |

| LOCAL INTERCONNECTION - Louisiana | | | | | | | | | | | | | | Attachment: 3 | | Exhibit: A | |
|---|---|---|---|---|---|---|---|---|---|---|---|---|---|---|---|---|---|
| CATEGORY | RATE ELEMENTS | Interim | Zone | BCS | USOC | RATES ($) | | | | | Svc Order Submitted Elec per LSR | Svc Order Submitted Manually per LSR | Incremental Charge - Manual Svc Order vs. Electronic-1st | Incremental Charge - Manual Svc Order vs. Electronic-Add'l | Incremental Charge - Manual Svc Order vs. Electronic-Disc 1st | Incremental Charge - Manual Svc Order vs. Electronic-Disc Add'l |
| | | | | | | Rec | Nonrecurring | | Nonrecurring Disconnect | | OSS Rates ($) | | | | | |
| | | | | | | | First | Add'l | First | Add'l | SOMEC | SOMAN | SOMAN | SOMAN | SOMAN | SOMAN |
| LOCAL INTERCONNECTION (CALL TRANSPORT AND TERMINATION) | | | | | | | | | | | | | | | | |
| | NOTE: "bk" beside a rate indicates that the Parties have agreed to bill and keep for that element pursuant to the terms and conditions in Attachment 3. | | | | | | | | | | | | | | | |
| | INTERCARRIER COMPENSATION FOR LOCAL TRAFFIC AND ISP-BOUND TRAFFIC | | | | | | | | | | | | | | | |
| | Single rate for Local Traffic and ISP-bound Traffic per MOU | | | | | 0.0007 | | | | | | | | | | |
| | TANDEM SWITCHING | | | | | | | | | | | | | | | |
| | Tandem Switching Function Per MOU | | | OHD | | 0.0005507 | | | | | | | | | | |
| | Multiple Tandem Switching, per MOU (applies to intial tandem only) | | | OHD | | 0.0005507 | | | | | | | | | | |
| | Tandem Intermediary Charge, per MOU* | | | OHD | | 0.0025 | | | | | | | | | | |
| | * This charge is applicable only to transit traffic and is applied in addition to applicable switching and/or interconnection charges. | | | | | | | | | | | | | | | |
| | TRUNK CHARGE | | | | | | | | | | | | | | | |
| | Installation Trunk Side Service - per DS0 | | | OHD | TPP6X | | 21.64 | 8.15 | | | | | | | | |
| | Installation Trunk Side Service - per DS0 | | | OHD | TPP9X | | 21.64 | 8.15 | | | | | | | | |
| | Dedicated End Office Trunk Port Service-per DS0** | | | OHD | TDEOP | 0.00 | | | | | | | | | | |
| | Dedicated End Office Trunk Port Service-per DS1** | | | OH1 OH1MS | TDE1P | 0.00 | | | | | | | | | | |
| | Dedicated Tandem Trunk Port Service-per DS0** | | | OHD | TDWOP | 0.00 | | | | | | | | | | |
| | Dedicated Tandem Trunk Port Service-per DS1** | | | OH1 OH1MS | TDW1P | 0.00 | | | | | | | | | | |
| | ** This rate element is recovered on a per MOU basis and is included in the End Office Switching and Tandem Switching, per MOU rate elements | | | | | | | | | | | | | | | |
| | COMMON TRANSPORT (Shared) | | | | | | | | | | | | | | | |
| | Common Transport - Per Mile, Per MOU | | | OHD | | 0.0000032 | | | | | | | | | | |
| | Common Transport - Facilities Termination Per MOU | | | OHD | | 0.0003748 | | | | | | | | | | |
| LOCAL INTERCONNECTION (DEDICATED TRANSPORT) | | | | | | | | | | | | | | | | |
| | INTEROFFICE CHANNEL - DEDICATED TRANSPORT | | | | | | | | | | | | | | | |
| | Interoffice Channel - Dedicated Transport - 2-Wire Voice Grade - Per Mile per month | | | OHM | 1L5NF | 0.013 | | | | | | | | | | |
| | Interoffice Channel - Dedicated Transport- 2- Wire Voice Grade - Facility Termination per month | | | OHM | 1L5NF | 22.60 | 39.36 | 26.62 | | | | | | | | |
| | Interoffice Channel - Dedicated Transport - 56 kbps - per mile per month | | | OHM | 1L5NK | 0.013 | | | | | | | | | | |
| | Interoffice Channel - Dedicated Transport - 56 kbps - Facility Termination per month | | | OHM | 1L5NK | 15.61 | 39.37 | 26.62 | | | | | | | | |
| | Interoffice Channel - Dedicated Transport - 64 kbps - per mile per month | | | OHM | 1L5NK | 0.013 | | | | | | | | | | |
| | Interoffice Channel - Dedicated Transport - 64 kbps - Facility Termination per month | | | OHM | 1L5NK | 15.61 | 39.37 | 26.62 | | | | | | | | |
| | Interoffice Channel - Dedicated Channel - DS1 - Per Mile per month | | | OH1, OH1MS | 1L5NL | 0.2652 | | | | | | | | | | |
| | Interoffice Channel - Dedicated Tranport - DS1 - Facility Termination per month | | | OH1, OH1MS | 1L5NL | 70.47 | 86.69 | 79.44 | | | | | | | | |
| | Interoffice Channel - Dedicated Transport - DS3 - Per Mile per month | | | OH3, OH3MS | 1L5NM | 6.04 | | | | | | | | | | |
| | Interoffice Channel - Dedicated Transport - DS3 - Facility Termination per month | | | OH3, OH3MS | 1L5NM | 850.45 | 270.69 | 158.05 | | | | | | | | |
| | LOCAL CHANNEL - DEDICATED TRANSPORT | | | | | | | | | | | | | | | |
| | Local Channel - Dedicated - 2-Wire Voice Grade per month | | | OHM | TEFV2 | 18.32 | 187.51 | 32.21 | | | | | | | | |
| | Local Channel - Dedicated - 4-Wire Voice Grade per month | | | OHM | TEFV4 | 19.41 | 187.94 | 32.63 | | | | | | | | |
| | Local Channel - Dedicated - DS1 per month | | | OH1 | TEFHG | 39.18 | 172.34 | 149.27 | | | | | | | | |
| | Local Channel - Dedicated - DS3 Facility Termination per month | | | OH3 | TEFHJ | 469.44 | 438.46 | 256.30 | | | | | | | | |
| | LOCAL INTERCONNECTION MID-SPAN MEET | | | | | | | | | | | | | | | |
| | NOTE: If Access service ride Mid-Span Meet, one-half the tariffed service Local Channel rate is applicable. | | | | | | | | | | | | | | | |
| | Local Channel - Dedicated - DS1 per month | | | OH1MS | TEFHG | 0.00 | 0.00 | | | | | | | | | |
| | Local Channel - Dedicated - DS3 per month | | | OH3MS | TEFHJ | 0.00 | 0.00 | | | | | | | | | |
| | MULTIPLEXERS | | | | | | | | | | | | | | | |
| | Channelization - DS1 to DS0 Channel System | | | OH1, OH1MS | SATN1 | 105.09 | 88.41 | 60.76 | | | | | | | | |
| | DS3 to DS1 Channel System per month | | | OH3, OH3MS | SATNS | 201.48 | 172.99 | 91.25 | | | | | | | | |
| | DS3 Interface Unit (DS1 COCI) per month | | | OH1, OH1MS | SATCO | 11.78 | 6.39 | 4.58 | | | | | | | | |
| | Notes: If no rate is identified in the contract, the rates, terms, and conditions for the specific service or function will be as set forth in applicable BellSouth tariff. | | | | | | | | | | | | | | | |

| LOCAL INTERCONNECTION - Mississippi | | | | | | | | | | | | | | | | | | |
|---|---|---|---|---|---|---|---|---|---|---|---|---|---|---|---|---|---|---|
| | | | | | | | | | | | | | | Attachment: 3 | | Exhibit: A | |
| CATEGORY | RATE ELEMENTS | Interim | Zone | BCS | USOC | RATES ($) | | | | | Svc Order Submitted Elec per LSR | Svc Order Submitted Manually per LSR | Incremental Charge - Manual Svc Order vs. Electronic-1st | Incremental Charge - Manual Svc Order vs. Electronic-Add'l | Incremental Charge - Manual Svc Order vs. Electronic-Disc 1st | Incremental Charge - Manual Svc Order vs. Electronic-Disc Add'l |
| | | | | | | Rec | Nonrecurring | | Nonrecurring Disconnect | | OSS Rates ($) | | | | | |
| | | | | | | | First | Add'l | First | Add'l | SOMEC | SOMAN | SOMAN | SOMAN | SOMAN | SOMAN |
| LOCAL INTERCONNECTION (CALL TRANSPORT AND TERMINATION) | | | | | | | | | | | | | | | | |
| | NOTE: "bk" beside a rate indicates that the Parties have agreed to bill and keep for that element pursuant to the terms and conditions in Attachment 3. | | | | | | | | | | | | | | | |
| | INTERCARRIER COMPENSATION FOR LOCAL TRAFFIC AND ISP-BOUND TRAFFIC | | | | | | | | | | | | | | | |
| | Single rate for Local Traffic and ISP-bound Traffic per MOU | | | | | 0.0007 | | | | | | | | | | |
| | TANDEM SWITCHING | | | | | | | | | | | | | | | |
| | Tandem Switching Function Per MOU | | | OHD | | 0.0005379 | | | | | | | | | | |
| | Multiple Tandem Switching, per MOU (applies to intial tandem only) | | | OHD | | 0.0005379 | | | | | | | | | | |
| | Tandem Intermediary Charge, per MOU* | | | OHD | | 0.0025 | | | | | | | | | | |
| | * This charge is applicable only to transit traffic and is applied in addition to applicable switching and/or interconnection charges. | | | | | | | | | | | | | | | |
| | TRUNK CHARGE | | | | | | | | | | | | | | | |
| | Installation Trunk Side Service - per DS0 | | | OHD | TPP6X | | 21.58 | 8.13 | | | | | | | | |
| | Installation Trunk Side Service - per DS0 | | | OHD | TPP9X | | 21.58 | 8.13 | | | | | | | | |
| | Dedicated End Office Trunk Port Service-per DS0** | | | OHD | TDEOP | 0.00 | | | | | | | | | | |
| | Dedicated End Office Trunk Port Service-per DS1** | | | OH1 OH1MS | TDE1P | 0.00 | | | | | | | | | | |
| | Dedicated Tandem Trunk Port Service-per DS0** | | | OHD | TDWOP | 0.00 | | | | | | | | | | |
| | Dedicated Tandem Trunk Port Service-per DS1** | | | OH1 OH1MS | TDW1P | 0.00 | | | | | | | | | | |
| | ** This rate element is recovered on a per MOU basis and is included in the End Office Switching and Tandem Switching, per MOU rate elements | | | | | | | | | | | | | | | |
| | COMMON TRANSPORT (Shared) | | | | | | | | | | | | | | | |
| | Common Transport - Per Mile, Per MOU | | | OHD | | 0.0000026 | | | | | | | | | | |
| | Common Transport - Facilities Termination Per MOU | | | OHD | | 0.0004541 | | | | | | | | | | |
| LOCAL INTERCONNECTION (DEDICATED TRANSPORT) | | | | | | | | | | | | | | | | |
| | INTEROFFICE CHANNEL - DEDICATED TRANSPORT | | | | | | | | | | | | | | | |
| | Interoffice Channel - Dedicated Transport - 2-Wire Voice Grade - Per Mile per month | | | OHM | 1L5NF | 0.0098 | | | | | | | | | | |
| | Interoffice Channel - Dedicated Transport- 2- Wire Voice Grade - Facility Termination per month | | | OHM | 1L5NF | 22.52 | 40.77 | 27.57 | 17.26 | 7.11 | | | | | | |
| | Interoffice Channel - Dedicated Transport - 56 kbps - per mile per month | | | OHM | 1L5NK | 0.0098 | | | | | | | | | | |
| | Interoffice Channel - Dedicated Transport - 56 kbps - Facility Termination per month | | | OHM | 1L5NK | 15.68 | 40.78 | 27.57 | 17.26 | 7.11 | | | | | | |
| | Interoffice Channel - Dedicated Transport - 64 kbps - per mile per month | | | OHM | 1L5NK | 0.0098 | | | | | | | | | | |
| | Interoffice Channel - Dedicated Transport - 64 kbps - Facility Termination per month | | | OHM | 1L5NK | 15.68 | 40.78 | 27.57 | 17.26 | 7.11 | | | | | | |
| | Interoffice Channel - Dedicated Channel - DS1 - Per Mile per month | | | OH1, OH1MS | 1L5NL | 0.201 | | | | | | | | | | |
| | Interoffice Channel - Dedicated Tranport - DS1 - Facility Termination per month | | | OH1, OH1MS | 1L5NL | 57.33 | 89.79 | 82.28 | 16.86 | 14.90 | | | | | | |
| | Interoffice Channel - Dedicated Transport - DS3 - Per Mile per month | | | OH3, OH3MS | 1L5NM | 4.76 | | | | | | | | | | |
| | Interoffice Channel - Dedicated Transport - DS3 - Facility Termination per month | | | OH3, OH3MS | 1L5NM | 641.90 | 280.37 | 163.70 | 62.08 | 60.29 | | | | | | |
| | LOCAL CHANNEL - DEDICATED TRANSPORT | | | | | | | | | | | | | | | |
| | Local Channel - Dedicated - 2-Wire Voice Grade per month | | | OHM | TEFV2 | 14.91 | 194.22 | 33.36 | 37.79 | 3.30 | | | | | | |
| | Local Channel - Dedicated - 4-Wire Voice Grade per month | | | OHM | TEFV4 | 15.99 | 194.66 | 33.80 | 38.27 | 3.78 | | | | | | |
| | Local Channel - Dedicated - DS1 per month | | | OH1 | TEFHG | 36.83 | 178.50 | 154.61 | 22.89 | 15.74 | | | | | | |
| | Local Channel - Dedicated - DS3 Facility Termination per month | | | OH3 | TEFHJ | 413.87 | 454.13 | 264.47 | 123.23 | 86.19 | | | | | | |
| | LOCAL INTERCONNECTION MID-SPAN MEET | | | | | | | | | | | | | | | |
| | NOTE: If Access service ride Mid-Span Meet, one-half the tariffed service Local Channel rate is applicable. | | | | | | | | | | | | | | | |
| | Local Channel - Dedicated - DS1 per month | | | OH1MS | TEFHG | 0.00 | 0.00 | | | | | | | | | |
| | Local Channel - Dedicated - DS3 per month | | | OH3MS | TEFHJ | 0.00 | 0.00 | | | | | | | | | |
| | MULTIPLEXERS | | | | | | | | | | | | | | | |
| | Channelization - DS1 to DS0 Channel System | | | OH1, OH1MS | SATN1 | 102.85 | 91.57 | 62.94 | 10.87 | 10.10 | | | | | | |
| | DS3 to DS1 Channel System per month | | | OH3, OH3MS | SATNS | 170.63 | 179.17 | 94.52 | 34.30 | 32.82 | | | | | | |
| | DS3 Interface Unit (DS1 COCI) per month | | | OH1, OH1MS | SATCO | 12.96 | 6.62 | 4.74 | | | | | | | | |
| | Notes: If no rate is identified in the contract, the rates, terms, and conditions for the specific service or function will be as set forth in applicable BellSouth tariff. | | | | | | | | | | | | | | | |

| LOCAL INTERCONNECTION - North Carolina | | | | | | | | | | | | | | | | | |
|---|---|---|---|---|---|---|---|---|---|---|---|---|---|---|---|---|---|
| | | | | | | | | | | | | | | Attachment: 3 | | Exhibit: A | |
| CATEGORY | RATE ELEMENTS | Interim | Zone | BCS | USOC | RATES ($) | | | | | Svc Order Submitted Elec per LSR | Svc Order Submitted Manually per LSR | Incremental Charge - Manual Svc Order vs. Electronic-1st | Incremental Charge - Manual Svc Order vs. Electronic-Add'l | Incremental Charge - Manual Svc Order vs. Electronic-Disc 1st | Incremental Charge - Manual Svc Order vs. Electronic-Disc Add'l |
| | | | | | | Rec | Nonrecurring | | Nonrecurring Disconnect | | OSS Rates ($) | | | | | |
| | | | | | | | First | Add'l | First | Add'l | SOMEC | SOMAN | SOMAN | SOMAN | SOMAN | SOMAN |
| LOCAL INTERCONNECTION (CALL TRANSPORT AND TERMINATION) | | | | | | | | | | | | | | | | |
| | NOTE: "bk" beside a rate indicates that the Parties have agreed to bill and keep for that element pursuant to the terms and conditions in Attachment 3. | | | | | | | | | | | | | | | |
| | INTERCARRIER COMPENSATION FOR LOCAL TRAFFIC AND ISP-BOUND TRAFFIC | | | | | | | | | | | | | | | |
| | Single rate for Local Traffic and ISP-bound Traffic per MOU | | | | | 0.0007 | | | | | | | | | | |
| | TANDEM SWITCHING | | | | | | | | | | | | | | | |
| | Tandem Switching Function Per MOU | | | OHD | | 0.0012 | | | | | | | | | | |
| | Multiple Tandem Switching, per MOU (applies to intial tandem only) | | | OHD | | 0.0012 | | | | | | | | | | |
| | Tandem Intermediary Charge, per MOU* | | | OHD | | 0.0025 | | | | | | | | | | |
| | * This charge is applicable only to transit traffic and is applied in addition to applicable switching and/or interconnection charges. | | | | | | | | | | | | | | | |
| | TRUNK CHARGE | | | | | | | | | | | | | | | |
| | Installation Trunk Side Service - per DS0 | | | OHD | TPP6X | | 21.55 | 8.12 | | | | | | | | |
| | Installation Trunk Side Service - per DS0 | | | OHD | TPP9X | | 21.55 | 8.12 | | | | | | | | |
| | Dedicated End Office Trunk Port Service-per DS0** | | | OHD | TDEOP | 0.00 | | | | | | | | | | |
| | Dedicated End Office Trunk Port Service-per DS1** | | | OH1 OH1MS | TDE1P | 0.00 | | | | | | | | | | |
| | Dedicated Tandem Trunk Port Service-per DS0** | | | OHD | TDWOP | 0.00 | | | | | | | | | | |
| | Dedicated Tandem Trunk Port Service-per DS1** | | | OH1 OH1MS | TDW1P | 0.00 | | | | | | | | | | |
| | ** This rate element is recovered on a per MOU basis and is included in the End Office Switching and Tandem Switching, per MOU rate elements | | | | | | | | | | | | | | | |
| | COMMON TRANSPORT (Shared) | | | | | | | | | | | | | | | |
| | Common Transport - Per Mile, Per MOU | | | OHD | | 0.00001 | | | | | | | | | | |
| | Common Transport - Facilities Termination Per MOU | | | OHD | | 0.00034 | | | | | | | | | | |
| LOCAL INTERCONNECTION (DEDICATED TRANSPORT) | | | | | | | | | | | | | | | | |
| | INTEROFFICE CHANNEL - DEDICATED TRANSPORT | | | | | | | | | | | | | | | |
| | Interoffice Channel - Dedicated Transport - 2-Wire Voice Grade - Per Mile per month | | | OHM | 1L5NF | 0.0282 | | | | | | | | | | |
| | Interoffice Channel - Dedicated Transport- 2- Wire Voice Grade - Facility Termination per month | | | OHM | 1L5NF | 18.00 | 137.48 | 52.58 | | | | | | | | |
| | Interoffice Channel - Dedicated Transport - 56 kbps - per mile per month | | | OHM | 1L5NK | 0.0282 | | | | | | | | | | |
| | Interoffice Channel - Dedicated Transport - 56 kbps - Facility Termination per month | | | OHM | 1L5NK | 17.40 | 137.48 | 52.58 | | | | | | | | |
| | Interoffice Channel - Dedicated Transport - 64 kbps - per mile per month | | | OHM | 1L5NK | 0.0282 | | | | | | | | | | |
| | Interoffice Channel - Dedicated Transport - 64 kbps - Facility Termination per month | | | OHM | 1L5NK | 17.40 | 137.48 | 52.58 | | | | | | | | |
| | Interoffice Channel - Dedicated Channel - DS1 - Per Mile per month | | | OH1, OH1MS | 1L5NL | 0.5753 | | | | | | | | | | |
| | Interoffice Channel - Dedicated Tranport - DS1 - Facility Termination per month | | | OH1, OH1MS | 1L5NL | 71.29 | 217.17 | 163.75 | | | | | | | | |
| | Interoffice Channel - Dedicated Transport - DS3 - Per Mile per month | | | OH3, OH3MS | 1L5NM | 12.98 | | | | | | | | | | |
| | Interoffice Channel - Dedicated Transport - DS3 - Facility Termination per month | | | OH3, OH3MS | 1L5NM | 720.38 | 794.94 | 579.55 | | | | | | | | |
| | LOCAL CHANNEL - DEDICATED TRANSPORT | | | | | | | | | | | | | | | |
| | Local Channel - Dedicated - 2-Wire Voice Grade per month | | | OHM | TEFV2 | 11.24 | 553.80 | 89.69 | | | | | | | | |
| | Local Channel - Dedicated - 4-Wire Voice Grade per month | | | OHM | TEFV4 | 12.03 | 562.23 | 92.67 | | | | | | | | |
| | Local Channel - Dedicated - DS1 per month | | | OH1 | TEFHG | 27.05 | 534.48 | 462.69 | | | | | | | | |
| | Local Channel - Dedicated - DS3 Facility Termination per month | | | OH3 | TEFHJ | 298.92 | 438.46 | 256.30 | | | | | | | | |
| | LOCAL INTERCONNECTION MID-SPAN MEET | | | | | | | | | | | | | | | |
| | NOTE: If Access service ride Mid-Span Meet, one-half the tariffed service Local Channel rate is applicable. | | | | | | | | | | | | | | | |
| | Local Channel - Dedicated - DS1 per month | | | OH1MS | TEFHG | 0.00 | 0.00 | | | | | | | | | |
| | Local Channel - Dedicated - DS3 per month | | | OH3MS | TEFHJ | 0.00 | 0.00 | | | | | | | | | |
| | MULTIPLEXERS | | | | | | | | | | | | | | | |
| | Channelization - DS1 to DS0 Channel System | | | OH1, OH1MS | SATN1 | 146.69 | 197.78 | 140.06 | | | | | | | | |
| | DS3 to DS1 Channel System per month | | | OH3, OH3MS | SATNS | 233.10 | 403.97 | 234.40 | | | | | | | | |
| | DS3 Interface Unit (DS1 COCI) per month | | | OH1, OH1MS | SATCO | 16.07 | 13.09 | 9.38 | | | | | | | | |
| | Notes: If no rate is identified in the contract, the rates, terms, and conditions for the specific service or function will be as set forth in applicable BellSouth tariff. | | | | | | | | | | | | | | | |

| LOCAL INTERCONNECTION - South Carolina | | | | | | | | | | | | | Attachment: 3 | | Exhibit: A | |
|---|---|---|---|---|---|---|---|---|---|---|---|---|---|---|---|---|
| CATEGORY | RATE ELEMENTS | Interim | Zone | BCS | USOC | RATES ($) | | | | | Svc Order Submitted Elec per LSR | Svc Order Submitted Manually per LSR | Incremental Charge - Manual Svc Order vs. Electronic-1st | Incremental Charge - Manual Svc Order vs. Electronic-Add'l | Incremental Charge - Manual Svc Order vs. Electronic-Disc 1st | Incremental Charge - Manual Svc Order vs. Electronic-Disc Add'l |
| | | | | | | Rec | Nonrecurring | | Nonrecurring Disconnect | | OSS Rates ($) | | | | | |
| | | | | | | | First | Add'l | First | Add'l | SOMEC | SOMAN | SOMAN | SOMAN | SOMAN | SOMAN |
| LOCAL INTERCONNECTION (CALL TRANSPORT AND TERMINATION) | | | | | | | | | | | | | | | | |
| | NOTE: "bk" beside a rate indicates that the Parties have agreed to bill and keep for that element pursuant to the terms and conditions in Attachment 3. | | | | | | | | | | | | | | | |
| | INTERCARRIER COMPENSATION FOR LOCAL TRAFFIC AND ISP-BOUND TRAFFIC | | | | | | | | | | | | | | | |
| | Single rate for Local Traffic and ISP-bound Traffic per MOU | | | | | 0.0007 | | | | | | | | | | |
| | TANDEM SWITCHING | | | | | | | | | | | | | | | |
| | Tandem Switching Function Per MOU | | | OHD | | 0.000736 | | | | | | | | | | |
| | Multiple Tandem Switching, per MOU (applies to intial tandem only) | | | OHD | | 0.000736 | | | | | | | | | | |
| | Tandem Intermediary Charge, per MOU* | | | OHD | | 0.0025 | | | | | | | | | | |
| | * This charge is applicable only to transit traffic and is applied in addition to applicable switching and/or interconnection charges. | | | | | | | | | | | | | | | |
| | TRUNK CHARGE | | | | | | | | | | | | | | | |
| | Installation Trunk Side Service - per DS0 | | | OHD | TPP6X | | 21.65 | 8.16 | | | | | | | | |
| | Installation Trunk Side Service - per DS0 | | | OHD | TPP9X | | 21.65 | 8.16 | | | | | | | | |
| | Dedicated End Office Trunk Port Service-per DS0** | | | OHD | TDEOP | 0.00 | | | | | | | | | | |
| | Dedicated End Office Trunk Port Service-per DS1** | | | OH1 OH1MS | TDE1P | 0.00 | | | | | | | | | | |
| | Dedicated Tandem Trunk Port Service-per DS0** | | | OHD | TDWOP | 0.00 | | | | | | | | | | |
| | Dedicated Tandem Trunk Port Service-per DS1** | | | OH1 OH1MS | TDW1P | 0.00 | | | | | | | | | | |
| | ** This rate element is recovered on a per MOU basis and is included in the End Office Switching and Tandem Switching, per MOU rate elements | | | | | | | | | | | | | | | |
| | COMMON TRANSPORT (Shared) | | | | | | | | | | | | | | | |
| | Common Transport - Per Mile, Per MOU | | | OHD | | 0.0000045 | | | | | | | | | | |
| | Common Transport - Facilities Termination Per MOU | | | OHD | | 0.0004095 | | | | | | | | | | |
| LOCAL INTERCONNECTION (DEDICATED TRANSPORT) | | | | | | | | | | | | | | | | |
| | INTEROFFICE CHANNEL - DEDICATED TRANSPORT | | | | | | | | | | | | | | | |
| | Interoffice Channel - Dedicated Transport - 2-Wire Voice Grade - Per Mile per month | | | OHM | 1L5NF | 0.0167 | | | | | | | | | | |
| | Interoffice Channel - Dedicated Transport- 2- Wire Voice Grade - Facility Termination per month | | | OHM | 1L5NF | 24.30 | 40.63 | 27.47 | 16.77 | 6.91 | | | | | | |
| | Interoffice Channel - Dedicated Transport - 56 kbps - per mile per month | | | OHM | 1L5NK | 0.0167 | | | | | | | | | | |
| | Interoffice Channel - Dedicated Transport - 56 kbps - Facility Termination per month | | | OHM | 1L5NK | 16.76 | 40.63 | 27.47 | 16.77 | 6.91 | | | | | | |
| | Interoffice Channel - Dedicated Transport - 64 kbps - per mile per month | | | OHM | 1L5NK | 0.0167 | | | | | | | | | | |
| | Interoffice Channel - Dedicated Transport - 64 kbps - Facility Termination per month | | | OHM | 1L5NK | 16.76 | 40.63 | 27.47 | 16.77 | 6.91 | | | | | | |
| | Interoffice Channel - Dedicated Channel - DS1 - Per Mile per month | | | OH1, OH1MS | 1L5NL | 0.3415 | | | | | | | | | | |
| | Interoffice Channel - Dedicated Tranport - DS1 - Facility Termination per month | | | OH1, OH1MS | 1L5NL | 77.14 | 89.47 | 81.99 | 16.39 | 14.48 | | | | | | |
| | Interoffice Channel - Dedicated Transport - DS3 - Per Mile per month | | | OH3, OH3MS | 1L5NM | 8.02 | | | | | | | | | | |
| | Interoffice Channel - Dedicated Transport - DS3 - Facility Termination per month | | | OH3, OH3MS | 1L5NM | 880.65 | 279.37 | 163.12 | 60.33 | 58.59 | | | | | | |
| | LOCAL CHANNEL - DEDICATED TRANSPORT | | | | | | | | | | | | | | | |
| | Local Channel - Dedicated - 2-Wire Voice Grade per month | | | OHM | TEFV2 | 15.33 | 193.53 | 33.24 | 36.72 | 3.21 | | | | | | |
| | Local Channel - Dedicated - 4-Wire Voice Grade per month | | | OHM | TEFV4 | 16.54 | 193.97 | 33.68 | 37.19 | 3.68 | | | | | | |
| | Local Channel - Dedicated - DS1 per month | | | OH1 | TEFHG | 42.62 | 177.87 | 154.06 | 22.24 | 15.30 | | | | | | |
| | Local Channel - Dedicated - DS3 Facility Termination per month | | | OH3 | TEFHJ | 446.00 | 452.52 | 264.53 | 119.75 | 83.77 | | | | | | |
| | LOCAL INTERCONNECTION MID-SPAN MEET | | | | | | | | | | | | | | | |
| | NOTE: If Access service ride Mid-Span Meet, one-half the tariffed service Local Channel rate is applicable. | | | | | | | | | | | | | | | |
| | Local Channel - Dedicated - DS1 per month | | | OH1MS | TEFHG | 0.00 | 0.00 | | | | | | | | | |
| | Local Channel - Dedicated - DS3 per month | | | OH3MS | TEFHJ | 0.00 | 0.00 | | | | | | | | | |
| | MULTIPLEXERS | | | | | | | | | | | | | | | |
| | Channelization - DS1 to DS0 Channel System | | | OH1, OH1MS | SATN1 | 107.57 | 91.24 | 62.71 | 10.56 | 9.81 | | | | | | |
| | DS3 to DS1 Channel System per month | | | OH3, OH3MS | SATNS | 144.02 | 178.54 | 94.18 | 33.33 | 31.90 | | | | | | |
| | DS3 Interface Unit (DS1 COCI) per month | | | OH1, OH1MS | SATCO | 8.64 | 6.59 | 4.73 | | | | | | | | |
| | Notes: If no rate is identified in the contract, the rates, terms, and conditions for the specific service or function will be as set forth in applicable BellSouth tariff. | | | | | | | | | | | | | | | |

| LOCAL INTERCONNECTION - Tennessee | | | | | | | | | | | | | Attachment: 3 | | Exhibit: A | |
|---|---|---|---|---|---|---|---|---|---|---|---|---|---|---|---|---|
| CATEGORY | RATE ELEMENTS | Interim | Zone | BCS | USOC | RATES ($) | | | | | Svc Order Submitted Elec per LSR | Svc Order Submitted Manually per LSR | Incremental Charge - Manual Svc Order vs. Electronic-1st | Incremental Charge - Manual Svc Order vs. Electronic-Add'l | Incremental Charge - Manual Svc Order vs. Electronic-Disc 1st | Incremental Charge - Manual Svc Order vs. Electronic-Disc Add'l |
| | | | | | | Rec | Nonrecurring First | Nonrecurring Add'l | Nonrecurring Disconnect First | Nonrecurring Disconnect Add'l | OSS Rates ($) SOMEC | SOMAN | SOMAN | SOMAN | SOMAN | SOMAN |
| LOCAL INTERCONNECTION (CALL TRANSPORT AND TERMINATION) | | | | | | | | | | | | | | | | |
| | NOTE: "bk" beside a rate indicates that the Parties have agreed to bill and keep for that element pursuant to the terms and conditions in Attachment 3. | | | | | | | | | | | | | | | |
| | INTERCARRIER COMPENSATION FOR LOCAL TRAFFIC AND ISP-BOUND TRAFFIC | | | | | | | | | | | | | | | |
| | Single rate for Local Traffic and ISP-bound Traffic per MOU | | | | | 0.0007 | | | | | | | | | | |
| | TANDEM SWITCHING | | | | | | | | | | | | | | | |
| | Tandem Switching Function Per MOU | | | OHD | | 0.0009778 | | | | | | | | | | |
| | Multiple Tandem Switching, per MOU (applies to intial tandem only) | | | OHD | | 0.0009778 | | | | | | | | | | |
| | Tandem Intermediary Charge, per MOU* | | | OHD | | 0.0025 | | | | | | | | | | |
| | * This charge is applicable only to transit traffic and is applied in addition to applicable switching and/or interconnection charges. | | | | | | | | | | | | | | | |
| | TRUNK CHARGE | | | | | | | | | | | | | | | |
| | Installation Trunk Side Service - per DS0 | | | OHD | TPP6X | | 21.59 | 8.09 | | | | | | | | |
| | Installation Trunk Side Service - per DS0 | | | OHD | TPP9X | | 21.59 | 8.09 | | | | | | | | |
| | Dedicated End Office Trunk Port Service-per DS0** | | | OHD | TDEOP | 0.00 | | | | | | | | | | |
| | Dedicated End Office Trunk Port Service-per DS1** | | | OH1 OH1MS | TDE1P | 0.00 | | | | | | | | | | |
| | Dedicated Tandem Trunk Port Service-per DS0** | | | OHD | TDWOP | 0.00 | | | | | | | | | | |
| | Dedicated Tandem Trunk Port Service-per DS1** | | | OH1 OH1MS | TDW1P | 0.00 | | | | | | | | | | |
| | ** This rate element is recovered on a per MOU basis and is included in the End Office Switching and Tandem Switching, per MOU rate elements | | | | | | | | | | | | | | | |
| | COMMON TRANSPORT (Shared) | | | | | | | | | | | | | | | |
| | Common Transport - Per Mile, Per MOU | | | OHD | | 0.0000064 | | | | | | | | | | |
| | Common Transport - Facilities Termination Per MOU | | | OHD | | 0.0003871 | | | | | | | | | | |
| LOCAL INTERCONNECTION (DEDICATED TRANSPORT) | | | | | | | | | | | | | | | | |
| | INTEROFFICE CHANNEL - DEDICATED TRANSPORT | | | | | | | | | | | | | | | |
| | Interoffice Channel - Dedicated Transport - 2-Wire Voice Grade - Per Mile per month | | | OHM | 1L5NF | 0.0174 | | | | | | | | | | |
| | Interoffice Channel - Dedicated Transport- 2- Wire Voice Grade - Facility Termination per month | | | OHM | 1L5NF | 18.58 | 55.39 | 17.37 | 27.96 | 3.51 | | | | | | |
| | Interoffice Channel - Dedicated Transport - 56 kbps - per mile per month | | | OHM | 1L5NK | 0.0174 | | | | | | | | | | |
| | Interoffice Channel - Dedicated Transport - 56 kbps - Facility Termination per month | | | OHM | 1L5NK | 17.98 | 55.39 | 17.37 | 27.96 | 3.51 | | | | | | |
| | Interoffice Channel - Dedicated Transport - 64 kbps - per mile per month | | | OHM | 1L5NK | 0.0174 | | | | | | | | | | |
| | Interoffice Channel - Dedicated Transport - 64 kbps - Facility Termination per month | | | OHM | 1L5NK | 17.98 | 55.39 | 17.37 | 27.96 | 3.51 | | | | | | |
| | Interoffice Channel - Dedicated Channel - DS1 - Per Mile per month | | | OH1, OH1MS | 1L5NL | 0.3562 | | | | | | | | | | |
| | Interoffice Channel - Dedicated Tranport - DS1 - Facility Termination per month | | | OH1, OH1MS | 1L5NL | 77.86 | 112.40 | 76.27 | 19.55 | 14.99 | | | | | | |
| | Interoffice Channel - Dedicated Transport - DS3 - Per Mile per month | | | OH3, OH3MS | 1L5NM | 2.34 | | | | | | | | | | |
| | Interoffice Channel - Dedicated Transport - DS3 - Facility Termination per month | | | OH3, OH3MS | 1L5NM | 848.99 | 395.29 | 176.56 | 109.04 | 105.91 | | | | | | |
| | LOCAL CHANNEL - DEDICATED TRANSPORT | | | | | | | | | | | | | | | |
| | Local Channel - Dedicated - 2-Wire Voice Grade per month | | | OHM | TEFV2 | 19.43 | 199.33 | 24.16 | 54.81 | 4.80 | | | | | | |
| | Local Channel - Dedicated - 4-Wire Voice Grade per month | | | OHM | TEFV4 | 20.56 | 201.53 | 24.83 | 55.52 | 5.51 | | | | | | |
| | Local Channel - Dedicated - DS1 per month | | | OH1 | TEFHG | 40.99 | 277.35 | 233.26 | 33.18 | 22.30 | | | | | | |
| | Local Channel - Dedicated - DS3 Facility Termination per month | | | OH3 | TEFHJ | 611.30 | 595.37 | 304.50 | 215.82 | 151.15 | | | | | | |
| | LOCAL INTERCONNECTION MID-SPAN MEET | | | | | | | | | | | | | | | |
| | NOTE: If Access service ride Mid-Span Meet, one-half the tariffed service Local Channel rate is applicable. | | | | | | | | | | | | | | | |
| | Local Channel - Dedicated - DS1 per month | | | OH1MS | TEFHG | 0.00 | 0.00 | | | | | | | | | |
| | Local Channel - Dedicated - DS3 per month | | | OH3MS | TEFHJ | 0.00 | 0.00 | | | | | | | | | |
| | MULTIPLEXERS | | | | | | | | | | | | | | | |
| | Channelization - DS1 to DS0 Channel System | | | OH1, OH1MS | SATN1 | 80.77 | 141.87 | 77.11 | 44.47 | 42.62 | | | | | | |
| | DS3 to DS1 Channel System per month | | | OH3, OH3MS | SATNS | 222.98 | 308.03 | 108.47 | 6.34 | 4.23 | | | | | | |
| | DS3 Interface Unit (DS1 COCI) per month | | | OH1, OH1MS | SATCO | 17.58 | 6.07 | 4.66 | | | | | | | | |
| | Notes: If no rate is identified in the contract, the rates, terms, and conditions for the specific service or function will be as set forth in applicable BellSouth tariff. | | | | | | | | | | | | | | | |

# Attachment 4

# Physical Collocation

**BELLSOUTH**

**PHYSICAL COLLOCATION**

## 1. Scope of Attachment

1.1 The rates, terms, and conditions contained within this Attachment shall only apply when Level 3 is physically collocated as a sole occupant or as a Host within a BellSouth Premises location pursuant to this Attachment. BellSouth Premises include, for the purposes of this Attachment, BellSouth Central Offices and Serving Wire Centers and Adjacent Arrangements, as defined in Section 3.4 of this Attachment (hereinafter "Premises"). This Attachment is applicable to Premises owned or leased by BellSouth. However, if the Premises occupied by BellSouth is leased by BellSouth from a third party, special considerations and intervals may apply in addition to the terms and conditions contained in this Attachment. Where BellSouth notifies Level 3 that BellSouth's agreement with a third party does not grant BellSouth the ability to provide access and use rights to others, upon Level 3's request, BellSouth will use commercially reasonable efforts to obtain the third party's consent and to otherwise secure such rights. Upon Level 3's request, BellSouth will provide documentation of BellSouth's commercially reasonable efforts to obtain the third party's consent and to otherwise secure such rights.

1.2 Right to Occupy. BellSouth shall offer to Level 3 collocation on rates, terms, and conditions that are just, reasonable, non-discriminatory and consistent with the rules of the FCC. Subject to the rates, terms and conditions of this Attachment, where space is available and it is technically feasible, BellSouth will allow Level 3 to occupy a certain area designated by BellSouth within a Premises, or on BellSouth property upon which the Premises is located, of a size which is specified by Level 3 and agreed to by BellSouth (hereinafter "Collocation Space"). The necessary rates, terms and conditions for the premises as defined by the FCC, other than BellSouth Premises, shall be negotiated upon reasonable request for collocation at such premises.

1.2.1 Neither BellSouth nor any of BellSouth's affiliates may reserve space for future use on more preferential terms than those set forth in this Attachment.

1.2.1.1 In all states other than Florida, the size specified by Level 3 may contemplate a request for space sufficient to accommodate Level 3's growth within a twenty-four (24) month period.

1.2.1.2 In the state of Florida, the size specified by Level 3 may contemplate a request for space sufficient to accommodate Level 3's growth within an eighteen (18) month period.

1.3 Space Allocation. BellSouth shall attempt to accommodate Level 3's requested preferences, if any. In allocating Collocation Space, BellSouth shall not materially

increase Level 3's cost or materially delay Level 3's occupation and use of the Collocation Space, assign Collocation Space that will impair the quality of service or otherwise limit the service Level 3 wishes to offer, reduce unreasonably the total space available for physical collocation or preclude unreasonable physical collocation within the Premises. Space shall not be available for collocation if it is: (a) physically occupied by non-obsolete equipment; (b) assigned to another collocated telecommunications carrier; (c) used to provide physical access to occupied space; (d) used to enable technicians to work on equipment located within occupied space; (e) properly reserved for future use, either by BellSouth or another collocated telecommunications carrier; or (f) essential for the administration and proper functioning of Premises. BellSouth may segregate Collocation Space and require separate entrances for collocated telecommunications carriers to access their Collocation Space, pursuant to FCC Rules.

1.4 Space Reclamation. In the event of space exhaust within a Premises, BellSouth may include in its documentation for the Petition for Waiver filed with the Commission, any unutilized space in the Premises. Upon request, Level 3 will be responsible for the justification of unutilized space within its Collocation Space, if the Commission requires such justification.

1.5 Use of Space. Level 3 shall use the Collocation Space for the purposes of installing, maintaining and operating Level 3's equipment (to include testing and monitoring equipment) necessary for interconnection with BellSouth services and facilities or for accessing BellSouth unbundled network elements for the provision of telecommunications services, as specifically set forth in this Agreement.

1.6 Rates and Charges. Level 3 agrees to pay the rates and charges identified in Exhibit B attached hereto.

1.7 If any due date contained in this Attachment falls on a weekend or National holiday, the due date will be the next business day thereafter. For intervals of ten (10) calendar days or less, National holidays will be excluded.

1.8 The Parties agree to comply with all applicable federal, state, county, local and administrative laws, rules, ordinances, regulations and codes in the performance of their obligations hereunder.

## 2. Space Availability Report

2.1 Space Availability Report. Upon request from Level 3 and at Level 3's expense, BellSouth will provide a written report (Space Availability Report) describing in detail the space that is available for collocation at a particular Premises. This report will include the amount of Collocation Space available at the Premises requested, the number of collocators present at the Premises, any modifications in the use of the space since the last report on the Premises requested and the measures BellSouth is taking to make additional space available for collocation arrangements. A Space

Availability Report does not reserve space at the Premises for which the Space Availability Report was requested by Level 3.

2.1.1 The request from Level 3 for a Space Availability Report must be in writing and include the Premises street address, as identified in the Local Exchange Routing Guide (LERG) and Common Language Location Identification (CLLI) code of the Premises. CLLI code information is located in the National Exchange Carrier Association (NECA) Tariff FCC No. 4.

2.1.2 BellSouth will respond to a request for a Space Availability Report for a particular Premises within ten (10) calendar days of the receipt of such a request. BellSouth will make its best efforts to respond in ten (10) calendar days to a Space Availability Report request when the request includes from two (2) to five (5) Premises within the same state. The response time for Space Availability Report requests of more than five (5) Premises shall be negotiated between the Parties. If BellSouth cannot meet the ten (10) calendar day response time for two (2) to five (5) Premises within the same state, BellSouth shall notify Level 3 and inform Level 3 of the timeframe under which it can respond.

## 3. Collocation Options

3.1 Cageless. BellSouth shall allow Level 3 to collocate Level 3's equipment and facilities without requiring the construction of a cage or similar structure. BellSouth shall allow Level 3 to have direct access to Level 3's equipment and facilities in accordance with Section 5.9. BellSouth shall make cageless collocation available in single bay increments. Except where Level 3's equipment requires special technical considerations (e.g., special cable racking or isolated ground plane), BellSouth shall assign cageless Collocation Space in conventional equipment rack lineups where feasible. For equipment requiring special technical considerations, Level 3 must provide the equipment layout, including spatial dimensions for such equipment pursuant to generic requirements contained in Telcordia GR-63-Core, and shall be responsible for compliance with all special technical requirements associated with such equipment.

3.2 Caged. At Level 3's expense, Level 3 will arrange with a Supplier certified by BellSouth (BellSouth Certified Supplier) to construct a collocation arrangement enclosure in accordance with BellSouth's Technical References (TRs) (Specifications) prior to starting equipment installation. BellSouth will provide Specifications upon request. Where local building codes require enclosure specifications more stringent than BellSouth's enclosure Specifications, Level 3 and Level 3's BellSouth Certified Supplier must comply with the more stringent local building code requirements. Level 3's BellSouth Certified Supplier shall be responsible for filing and receiving any and all necessary permits and/or licenses for such construction. BellSouth shall cooperate with Level 3 and provide, the documentation, including existing building architectural drawings, enclosure drawings, and Specifications required and necessary for Level 3's

BellSouth Certified Supplier to obtain the zoning, permits and/or other licenses. Level 3 shall reimburse its BellSouth Certified Supplier or BellSouth, where applicable, the commercially reasonable and demonstrable costs, which include, but are not limited to, copying, printing and administrative costs for producing the documentation in providing such information. Level 3's BellSouth Certified Supplier shall bill Level 3 directly for all work performed for Level 3 pursuant to this Attachment. BellSouth shall have no liability for, nor responsibility to pay, such charges imposed by Level 3's BellSouth Certified Supplier. Level 3 must provide the local BellSouth Central Office building contact with two Access Keys that will allow entry into the locked enclosure. Except in the case of an emergency, BellSouth will not access Level 3's locked enclosure prior to notifying Level 3 at least forty-eight (48) hours or two (2) business days, whichever is greater, before access to the Collocation Space is required. Upon request, BellSouth shall construct the enclosure for Level 3.

3.2.1 BellSouth may elect to review Level 3's plans and specifications prior to allowing construction to start, to ensure compliance with BellSouth's Specifications. BellSouth will notify Level 3 of its desire to execute this review in BellSouth's response to the Initial Application, if Level 3 has indicated its desire to construct its own enclosure. If Level 3's Initial Application, as defined in Section 6.2 of this Attachment, does not indicate its desire to construct its own enclosure, and Level 3 subsequently decides to construct its own enclosure, then Level 3 will submit an application modification pursuant to Section 6.10.1 of this Attachment, indicating its desire to construct its own enclosure. If BellSouth elects to review Level 3's plans and specifications, then BellSouth will provide notification within ten (10) calendar days after the Subsequent Application, as defined in Section 6.3 of this Attachment, firm order date. BellSouth shall complete its review within fifteen (15) calendar days after the receipt of Level 3's plans and specifications. Regardless of whether or not BellSouth elects to review Level 3's plans and specifications, BellSouth reserves the right to inspect the enclosure after construction has been completed to ensure that it is constructed according to Level 3's submitted plans and specifications and/or BellSouth's Specifications, as applicable. If BellSouth decides to inspect the constructed Collocation Space, BellSouth will complete its inspection within fifteen (15) calendar days after receipt of written notification of completion of the enclosure from Level 3. When a deviation is detected by BellSouth during a review or an inspection, unless the Parties mutually agree that deviations from Level 3's plans and specifications or BellSouth's specifications are permitted, BellSouth shall require Level 3 to remove or correct within seven (7) calendar days, at Level 3's expense, any structure that does not meet Level 3's plans and specifications or BellSouth's Specifications, if applicable.

3.3 Shared Caged Collocation. Level 3 may allow other telecommunications carriers to share Level 3's caged collocation arrangement, pursuant to the terms and conditions agreed to by Level 3 (Host) and the other telecommunications carriers (Guests) pursuant to this Section, except where the Premises is located within a leased space and BellSouth is prohibited by said lease from offering such an option to Level 3. BellSouth shall be notified in writing by Level 3 upon the execution of any agreement

between the Host and its Guest(s) within ten (10) calendar days of its execution and prior to the submission of any firm orders ("Firm Order(s)"). Further, such notification shall include the name of the Guest(s), the term of the agreement, and a certification by Level 3 that said agreement imposes upon the Guest(s) the same terms and conditions for Collocation Space as set forth in this Attachment between BellSouth and Level 3.

3.3.1 Level 3, as the Host, shall be the sole interface and responsible Party to BellSouth for the assessment and billing of rates and charges contained within this Attachment and for the purposes of ensuring that the safety and security requirements of this Attachment are fully complied with by the Guest(s), its employees and agents. BellSouth shall provide Level 3 with a proration of the costs of the Collocation Space based on the number of collocators and the space used by each, with a minimum charge of one (1) bay/rack per Host/Guest. In all states other than Florida, and in addition to the above, where Level 3 is the Host, Level 3 shall be the responsible party to BellSouth for the purpose of submitting applications for initial and additional equipment placement for the Guest(s). In Florida, the Guest(s) may submit its own initial and additional equipment placement applications using the Host's Access Carrier Name Abbreviation (ACNA). A separate Guest application shall result in the assessment of an Initial Application Fee or a Subsequent Application Fee, as set forth in Exhibit B, which will be billed to the Host on the date that BellSouth provides its written response to the Guest(s) Bona Fide Application (Application Response).

3.3.2 Notwithstanding the foregoing, the Guest(s) may submit service orders directly to BellSouth to request the provisioning of interconnecting facilities between BellSouth and the Guest(s), the provisioning of services, and access to unbundled network elements. The bill for these interconnecting facilities, services and access to UNEs will be charged to the Guest(s) pursuant to the applicable Tariff or the Guest's Interconnection Agreement with BellSouth.

3.3.3 Level 3 shall indemnify and hold harmless BellSouth from any and all claims, actions, causes of action, of whatever kind or nature arising out of the presence of Level 3's Guest(s) in the Collocation Space, except to the extent caused by BellSouth's sole negligence, gross negligence, or willful misconduct and except for claims, action, causes of action, of whatever kind or nature directly arising out of or directly related to the interconnection agreement between BellSouth and the Guest(s) or BellSouth's provision of access to UNEs to the Guest(s) pursuant to the BellSouth and Guest's interconnection agreement directly.

3.4 Adjacent Collocation. Subject to technical feasibility and space availability, BellSouth will permit an adjacent collocation arrangement (Adjacent Arrangement) on Premises' property only when space within the Premises is legitimately exhausted and where the Adjacent Arrangement does not interfere with access to existing or planned structures or facilities on the Premises' property. An Adjacent Arrangement shall be constructed or procured by Level 3 and must be in conformance with BellSouth's design and

construction Specifications. Further, Level 3 shall construct, procure, maintain and operate said Adjacent Arrangement(s) pursuant to all of the rates, terms and conditions set forth in this Attachment.

3.4.1 If Level 3 requests Adjacent Collocation, pursuant to the conditions stated in 3.4 above, Level 3 must arrange with a BellSouth Certified Supplier to construct the Adjacent Arrangement structure in accordance with BellSouth's Specifications. BellSouth will provide Specifications upon request. Where local building codes require enclosure specifications more stringent than BellSouth's Specifications, Level 3 and Level 3's BellSouth Certified Supplier must comply with the more stringent local building code requirements. Level 3's BellSouth Certified Supplier shall be responsible for filing and receiving any and all necessary zoning, permits and/or licenses for such construction. Level 3's BellSouth Certified Supplier shall bill Level 3 directly for all work performed for Level 3 pursuant to this Attachment. BellSouth shall have no liability for, nor responsibility to pay, such charges imposed by Level 3's BellSouth Certified Supplier. Level 3 must provide the local BellSouth Central Office building contact with two cards, keys or other access devices used to gain entry into the locked enclosure. Except in the case of an emergency, BellSouth will not access Level 3's locked enclosure prior to notifying Level 3 at least forty-eight (48) hours or two (2) business days, whichever is greater, before access to the Collocation Space is required.

3.4.2 Level 3 must submit its Adjacent Arrangement construction plans and specifications to BellSouth when it places its Firm Order. BellSouth shall review Level 3's plans and specifications prior to construction of an Adjacent Arrangement(s) to ensure Level 3's compliance with BellSouth's Specifications. BellSouth shall complete its review within fifteen (15) calendar days after receipt of the plans and specifications from Level 3 for the Adjacent Arrangement. BellSouth may inspect the Adjacent Arrangement during and after construction is completed to ensure that it is constructed according to Level 3's submitted plans and specifications. If BellSouth decides to inspect the completed Adjacent Arrangement, BellSouth will complete its inspection within fifteen (15) calendar days after receipt of written notification of completion of the enclosure from Level 3. When a deviation is detected by BellSouth during a review or an inspection, unless the Parties mutually agree that deviations from Level 3's plans and specifications or BellSouth's specifications are permitted, BellSouth shall require Level 3 to remove or correct within seven (7) calendar days at Level 3's expense, any structure that does not meet its submitted plans and specifications or BellSouth's Specifications, if applicable.

3.4.3 Level 3 shall provide a concrete pad, the structure housing the arrangement, heating/ventilation/air conditioning (HVAC), lighting, and all of the facilities that are required to connect the structure (i.e., racking, conduits, etc.) to the BellSouth point of demarcation. At Level 3's option, and where the local authority having jurisdiction permits, BellSouth shall provide an AC power source and access to physical collocation services and facilities, subject to the same nondiscriminatory requirements

as those applicable to any other physical collocation arrangement. In Alabama and Louisiana, BellSouth will provide DC power to Adjacent Collocation sites where technically feasible, as that term has been defined by the FCC subject to individual case basis pricing that shall in all respects conform with Section 251 (c)(6) of the Act. Level 3's BellSouth Certified Supplier shall be responsible, at Level 3's sole expense, for filing and receiving any and all necessary zoning, permits and/or licenses for an Adjacent Arrangement. BellSouth shall allow Shared Caged Collocation within an Adjacent Arrangement, pursuant to the terms and conditions set forth in 3.3 above.

3.5 Co-Carrier Cross Connect (CCXC). The primary purpose of collocation is for a telecommunications carrier to interconnect with BellSouth's network or to access BellSouth's UNEs for the provision of telecommunications services. BellSouth will permit Level 3 to interconnect between its virtual or physical collocation arrangements and those of another collocated telecommunications carrier within the same Premises. Both Level 3's agreement and the other collocated telecommunications carrier's agreement must contain rates, terms and conditions for CCXC language. Level 3 is prohibited from using the Collocation Space for the sole or primary purpose of cross connecting to other collocated telecommunications carriers.

3.5.1. Level 3 must contract with a BellSouth Certified Supplier to place the CCXC. The CCXC shall be provisioned through facilities owned by Level 3. Such connections to other collocated telecommunications carriers may be made using either optical or electrical facilities. In cases where Level 3's equipment and the equipment of the other collocated telecommunications carrier are located in contiguous caged Collocation Spaces, Level 3 may use its own technicians to install co-carrier cross connects using either electrical or optical facilities between the equipment of both collocated telecommunications carriers and construct a dedicated cable support structure between the two contiguous cages. Level 3 shall deploy such optical or electrical connections directly between its own facilities and the facilities of another collocated telecommunications carrier without being routed through BellSouth's equipment. Level 3 shall not provision CCXC on any BellSouth distribution frame, POT (Point of Termination) Bay, DSX (Digital System Cross-connect) or LGX (Light Guide Cross-connect). Level 3 is responsible for ensuring the integrity of the signal.

3.5.2 Level 3 shall be responsible for providing a letter of authorization (LOA), with the application, to BellSouth from the other collocated telecommunications carrier to which it will be cross-connecting Level 3-provisioned CCXC shall utilize common cable support structure. There will be a recurring charge per linear foot, per cable, of common cable support structure used. In the case of two contiguous caged collocation arrangements, Level 3 may use its own technicians to construct the dedicated support structure between the two collocation arrangements.

3.5.3 To order CCXCs, Level 3 must submit an Initial Application or Subsequent Application to BellSouth. If no modification to the Collocation Space is requested other than the placement of CCXCs, the Subsequent Application Fee for CCXCs, as

defined in Exhibit B, will apply. If modifications, in addition to the placement of CCXCs, are requested, the Initial Application or Subsequent Application Fee will apply. BellSouth will bill this nonrecurring fee on the date that it provides an Application Response to Level 3.

**4. Occupancy**

4.1 Occupancy. BellSouth will notify Level 3 in writing when the Collocation Space is ready for occupancy (Space Ready Date). Level 3 will schedule and complete an acceptance walkthrough of the Collocation Space with BellSouth within fifteen (15) calendar days of the Space Ready Date. BellSouth, at its own expense, will correct any BellSouth caused deviations from Level 3's original or jointly amended application requirements within seven (7) calendar days after the walkthrough, unless the Parties jointly agree upon a different time frame. Any other additions or changes to the original or jointly amended request will be at Level 3's expense. BellSouth will also establish a new Space Ready Date. Another acceptance walkthrough will then be scheduled and conducted within fifteen (15) calendar days of the new Space Ready Date. This follow-up acceptance walkthrough will be limited to only those items identified in the initial walkthrough. If Level 3 completes its acceptance walkthrough within the fifteen (15) calendar day interval, billing will begin upon the date of Level 3's acceptance of the Collocation Space (Space Acceptance Date). In the event that Level 3 fails to complete an acceptance walkthrough within this fifteen (15) calendar day interval, the Collocation Space shall be deemed accepted by Level 3 on the Space Ready Date and billing will commence from that date. If Level 3 decides to occupy the space prior to the Space Ready Date, the date Level 3 occupies the space becomes the new Space Acceptance Date and billing will begin from that date. Level 3 must notify BellSouth in writing that collocation equipment installation is complete and operational with BellSouth's network. BellSouth may, at its discretion, refuse to accept orders for cross connects until it has received such notice. For the purposes of this paragraph, Level 3's telecommunications equipment will be deemed operational when it has been cross-connected to BellSouth's network for the purpose of provisioning telecommunication services to Level 3's customers.

4.2 Termination of Occupancy. In addition to any other provisions addressing termination of occupancy in this Agreement, Level 3 may terminate occupancy in a particular Collocation Space by submitting a Subsequent Application requesting termination of occupancy. Such termination shall be effective upon BellSouth's acceptance of the Space Relinquishment Form. Billing for monthly recurring charges will cease on the date that Level 3 and BellSouth conduct an inspection of the terminated space and jointly sign off on the Space Relinquishment Form or on the date that Level 3 signs off on the Space Relinquishment Form and sends this form to BellSouth, if a subsequent inspection of the terminated space by BellSouth reveals no discrepancies. If the subsequent inspection by BellSouth does reveal discrepancies, billing will cease on the date that BellSouth and Level 3 jointly conduct an inspection, which confirms that Level 3 has corrected all of the noted discrepancies. A Subsequent Application Fee will not apply for the termination of occupancy. BellSouth may terminate Level 3's

right to occupy the Collocation Space in the event that Level 3 fails to comply with any material provision directly related to Collocation in this Agreement provided BellSouth gives Level 3 thirty (30) calendar days' prior written notice of the failure to comply and gives Level 3 an opportunity to cure during such period. Notwithstanding the above, any termination for non-payment of applicable fees, shall be in accordance with Attachment 7, Billing.

4.2.1 Upon termination of occupancy, Level 3, at its sole expense, shall remove its equipment and any other property from the Collocation Space. Level 3 shall have thirty (30) calendar days from the Bona Fide Firm Order (BFFO) Subsequent Application date (Termination Date) to complete such removal, including the removal of all equipment and facilities of Level 3's Guest(s), unless Level 3's Guest(s) has assumed responsibility for the Collocation Space housing the Guest(s)'s equipment and executed the appropriate documentation required by BellSouth prior to the Level 3 removal date. Level 3 shall continue the payment of all monthly fees to BellSouth until the date that Level 3, and if applicable Level 3's Guest(s), has fully vacated the Collocation Space and the Space Relinquishment Form has been accepted by BellSouth. Should Level 3 or Level 3's Guest(s) fail to vacate the Collocation Space within thirty (30) calendar days from the Termination Date, BellSouth shall have the right to remove the equipment and dispose of the equipment and other property of Level 3 or Level 3's Guest(s), in any manner that BellSouth deems fit, at Level 3's expense and with no liability whatsoever for Level 3's property or Level 3's Guest(s)'s property. Upon termination of Level 3's right to occupy specific Collocation Space, the Collocation Space will revert back to BellSouth's space inventory, and Level 3 shall surrender the Collocation Space to BellSouth in the same condition as when it was first occupied by Level 3, with the exception of ordinary wear and tear, unless otherwise agreed to by the Parties. Level 3's BellSouth Certified Supplier shall be responsible for updating and making any necessary changes to BellSouth's records as required by BellSouth's Specifications including, but not limited to, Central Office Record Drawings and ERMA Records. Level 3 shall be responsible for the cost of removing any Level 3 constructed enclosure, together with any supporting structures (e.g., racking, conduits, or power cables), at the termination of occupancy and restoring the grounds to their original condition.

## 5. Use of Collocation Space

5.1 Equipment Type. BellSouth permits the collocation of any equipment necessary for interconnection to BellSouth's network or access to BellSouth's unbundled network elements in the provision of telecommunications services, as the term "necessary" is defined by FCC 47 C.F.R. Section 51.323 (b). The primary purpose and function of any equipment collocated in a Premises must be for interconnection to BellSouth's network or access to BellSouth's unbundled network elements in the provision of telecommunications services.

5.1.1 Examples of equipment that would not be considered necessary include, but are not limited to: traditional circuit switching equipment, equipment used exclusively for call related databases, computer servers used exclusively for providing information services, operations support system (OSS) equipment used to support collocated telecommunications carrier network operations, equipment that generates customer orders, manages trouble tickets or inventory, or stores customer records in centralized databases, etc. BellSouth will determine upon receipt of an application if the requested equipment is necessary based on the criteria established by the FCC. Multifunctional equipment placed on Premises must not place any greater relative burden on BellSouth's property than comparable single-function equipment. BellSouth reserves the right to permit collocation of any equipment on a nondiscriminatory basis.

5.1.2 Such equipment must, at a minimum, meet the following Telcordia Network Equipment Building Systems (NEBS) General Equipment Requirements: Criteria Level 1 requirements as outlined in Telcordia Special Report SR-3580, Issue 1. Except where otherwise required by a Commission, BellSouth shall comply with the applicable FCC rules relating to denial of collocation based on Level 3's failure to comply with this Section.

5.1.3 Level 3 may submit an application for equipment installation and DSO, DS1, DS3 and optical terminations on the same application. However, Level 3 shall not request more DS0, DS1, DS3 and optical terminations in an Initial Application or a Subsequent Application for a collocation arrangement than the total port or termination capacity of the equipment already physically installed in the arrangement or contained in an application. If full network termination capacity of the equipment being installed is not requested in the application, additional network terminations for the installed equipment will require the submission of another application. In the event Level 3 submits an application for terminations that will exceed the total capacity of the collocated equipment Level 3 will be informed of the discrepancy by BellSouth and required to submit a revision to the application.

5.2 Deleted

5.3 Level 3 shall not use the Collocation Space for marketing purposes, nor shall it place any identifying signs or markings outside the Collocation Space or on the grounds of the Premises. Provided, however Level 3 shall not be prohibited from identifying to its customers or potential customers a detailed list of those BellSouth Premises in which Level 3 maintains Collocation Space.

5.4 Level 3 shall place a plaque or affix other identification (e.g., stenciling) to Level 3's equipment, in order for BellSouth to identify Level 3's equipment, including a list of emergency contacts with telephone numbers.

5.5 Entrance Facilities. Level 3 may elect to place Level 3-owned or Level 3-leased fiber entrance facilities into its Collocation Space. BellSouth will designate the point of

interconnection in close proximity to the Premises building housing the Collocation Space, such as at an entrance manhole or a cable vault, which are physically accessible by both Parties. Level 3 will provide and place fiber cable at the point of entrance of sufficient length to be pulled through conduit and into the splice location. Level 3 will provide and install a sufficient length of fire retardant riser cable, to which the entrance cable will be spliced by BellSouth. The fire retardant riser cable will extend from the splice location to Level 3's equipment in the Collocation Space. In the event Level 3 utilizes a non-metallic, riser-type entrance facility, a splice will not be required. Level 3 must contact BellSouth for instructions prior to placing any entrance facility cable in the manhole. Level 3 is responsible for maintenance of the entrance facilities. At Level 3's option, BellSouth will accommodate, where technically feasible, a microwave entrance facility, pursuant to separately negotiated terms and conditions. In the case of adjacent collocation, copper facilities may be used between the adjacent collocation arrangement and the central office demarcation point unless BellSouth determines that limited space is available for the placement of entrance facilities.

5.5.1 Dual Entrance Facilities. BellSouth will provide at least two interconnection points at each Premise where at least two such interconnection points are available and capacity exists. Upon receipt of a request by Level 3 for dual entrance facilities to its physical Collocation Space, BellSouth shall provide Level 3 with information regarding BellSouth's capacity to accommodate the requested dual entrance facilities. If conduit in the serving manhole(s) is available and is not reserved for another purpose or for utilization within twelve (12) months of the receipt of an application for collocation, BellSouth will make the requested conduit space available for installing a second entrance facility to Level 3's arrangement. The location of the serving manhole(s) will be determined at the sole discretion of BellSouth. Where dual entrance facilities are not available due to lack of capacity, BellSouth will provide this information to Level 3 in the Application Response.

5.5.2 Shared Use. Level 3 may utilize spare capacity on an existing interconnector's entrance facility for the purpose of providing an entrance facility to Level 3's collocation arrangement within the same Premises. BellSouth shall allow the splice, as long as the fiber is non-working fiber. Level 3 must arrange with BellSouth in accordance with BellSouth's Special Construction Procedures, RL93-11-030BT, and provide a LOA from the other telecommunications carrier for BellSouth to perform the splice of the Level 3 provided riser cable to the spare capacity on the entrance facility. If Level 3 desires to allow another telecommunications carrier to use its entrance facilities, that telecommunications carrier must arrange with BellSouth in accordance with BellSouth's Special Construction Procedures, RL93-11-030BT, and provide a LOA from Level 3 for BellSouth to perform the splice of that telecommunications carrier's provided riser cable to the spare capacity on Level 3's entrance facility.

5.6 Demarcation Point. BellSouth will designate the point(s) of demarcation between Level 3's equipment and/or network and BellSouth's network. Each Party will be

responsible for the maintenance and operation of all equipment/facilities on its side of the demarcation point. For 2-wire and 4-wire connections to BellSouth's network, the demarcation point shall be a common block on the BellSouth designated conventional distributing frame (CDF). Level 3 shall be responsible for providing, and Level 3's BellSouth Certified Supplier shall be responsible for installing and properly labeling/stenciling the common block and any necessary cabling identified in Section 7 of this Attachment. For all other terminations, BellSouth shall designate a demarcation point on a per arrangement basis. Level 3 or its agent must perform all required maintenance to the equipment/facilities on its side of the demarcation point, pursuant to Section 5.7, following, and may self-provision cross-connects that may be required within the Collocation Space to activate service requests. At Level 3's option, a Point of Termination (POT) bay or frame may be placed in the Collocation Space.

5.6.1 In Tennessee, BellSouth will designate the point(s) of demarcation between Level 3's equipment and/or network and BellSouth's network. Each Party will be responsible for the maintenance and operation of all equipment/facilities on its side of the demarcation point. For connections to BellSouth's network, the demarcation point shall be a Level 3-provided Point of Termination Bay (POT Bay) in a common area within the Premises. Level 3 shall be responsible for providing, and Level 3's BellSouth Certified Supplier shall be responsible for installing and properly labeling/stenciling the POT Bay, as well as installing the necessary cabling between Level 3's Collocation Space and the demarcation point. Level 3 or its agent must perform all required maintenance to equipment/facilities on its side of the demarcation point, pursuant to Section 5.7, following, and may self-provision cross-connects that may be required within the Collocation Space to activate service requests. BellSouth will negotiate alternative rates, terms and conditions related to the demarcation point in Tennessee, in the event that Level 3 desires to avoid the use of an intermediary device as contemplated by the Tennessee Regulatory Authority.

5.7 Level 3's Equipment and Facilities. Level 3, or if required by this Attachment, Level 3's BellSouth Certified Supplier, is solely responsible for the design, engineering, installation, testing, provisioning, performance, monitoring, maintenance and repair of the equipment and facilities used by Level 3 which must be performed in compliance with all applicable BellSouth Specifications. Such equipment and facilities may include, but are not limited to, cable(s), equipment, and point of termination connections. Level 3 and its selected BellSouth Certified Supplier must follow and comply with all of the reasonable and nondiscriminatory requirements, outlined in BellSouth's TR 73503, TR 73519, TR 73572, and TR 73564.

5.8 BellSouth's Access to Collocation Space. From time to time, BellSouth may require access to the Collocation Space. BellSouth retains the right to access Level 3's space for the purpose of making BellSouth equipment and building modifications (e.g., running, altering or removing racking, ducts, electrical wiring, HVAC, and cabling). BellSouth will give notice to Level 3 at least forty-eight (48) hours before access to the Collocation Space is required. Level 3 may elect to be present whenever

BellSouth performs work in the Collocation Space. The Parties agree that Level 3 will not bear any of the expense associated with this type of work.

5.9 Access. Pursuant to Section 12, Level 3 shall have access to its Collocation Space twenty-four (24) hours a day, seven (7) days a week. Level 3 agrees to provide the name and social security number, date of birth, or driver's license number of each employee, supplier, or agent of Level 3 or Level 3's Guests that will be provided with access keys or cards (Access Keys) prior to the issuance of said Access Keys, using form RF-2906-C, the "CLEC and CLEC Certified Supplier Access Request and Acknowledgement" form. All information contained on this form including, but not limited to, personal information regarding the employee or agent shall be deemed strictly confidential regardless of whether it is marked as such, and shall be held and protected in accordance with the Confidentiality provisions set forth in Section 10 of the General Terms and Conditions of this Agreement. Key acknowledgement forms, the "Collocation Acknowledgement Sheet" for access cards and the "Key Acknowledgement Form" for keys must be signed by Level 3 and returned to BellSouth Access Management within fifteen (15) calendar days of Level 3's receipt. Failure to return these properly acknowledged forms will result in the holding of subsequent access key or card requests until the proper acknowledgement documents have been received by BellSouth and reflect current information. Access Keys may not be duplicated under any circumstances. Level 3 agrees to be responsible for all Access Keys and for the return of all Access Keys in the possession of Level 3's employees, suppliers, Guests, or agents after termination of the employment relationship, the contractual obligation with Level 3 ends, upon the termination of this Attachment, or upon the termination of occupancy of an individual collocation arrangement.

5.9.1 BellSouth will permit one accompanied site visit to Level 3's designated collocation arrangement location, after receipt of the BFFO without charge to Level 3. Level 3 must submit to BellSouth the completed Access Control Request Form for all employees or agents requiring access to the Premises within a minimum of thirty (30) calendar days prior to the date Level 3 desires access to the Collocation Space. All information contained on this form including, but not limited to, personal information regarding the employee or agent shall be deemed strictly confidential regardless of whether it is marked as such, and shall be held and protected in accordance with the Confidentiality provisions set forth in Section 10 of the General Terms and Conditions of this Agreement. In order to permit reasonable access during construction of the Collocation Space, Level 3 may submit a request for its one accompanied site visit to its designated collocation arrangement location at any time subsequent to BellSouth's receipt of the BFFO. In the event Level 3 desires access to the Collocation Space after submitting such a request, but prior to the approval of its access request, in addition to the first accompanied free visit, BellSouth shall permit Level 3 to access the Collocation Space accompanied by a security escort, at Level 3's expense. Level 3 must request escorted access to its designated collocation arrangement location at least three (3) business days prior to the date such access is desired.

5.10 Lost or Stolen Access Keys. Level 3 shall notify BellSouth in writing immediately in the case of lost or stolen Access Keys. If it becomes necessary for BellSouth to re-key buildings or deactivate a card as a result of a lost Access Key(s) or for failure to return an Access Key(s), Level 3 shall pay for all costs of re-keying or deactivating the card as set forth in Exhibit B of this Attachment.

5.11 Interference or Impairment. Notwithstanding any other provisions of this Attachment, Level 3 shall not use any product or service provided under this Agreement, any other service related thereto or used in combination therewith, or place or use any equipment or facilities in any manner that 1) significantly degrades, interferes with or impairs service provided by BellSouth or by any other entity or any person's use of its telecommunications services; 2) endangers or damages the equipment, facilities or any other property of BellSouth or of any other entity or person; 3) compromises the privacy of any communications; or 4) creates an unreasonable risk of injury or death to any individual or to the public. If BellSouth reasonably determines that any equipment or facilities of Level 3 violates the provisions of this paragraph, BellSouth shall provide written notice to Level 3, which shall direct Level 3 to cure the violation within forty-eight (48) hours of Level 3's actual receipt of written notice or, at a minimum, to commence curative measures within twenty-four (24) hours and to exercise reasonable diligence to complete such measures as soon as possible thereafter. After receipt of the notice, the Parties agree to consult immediately and, if necessary, to conduct an inspection of the arrangement.

5.11.1 Except in the case of the deployment of an advanced service which significantly degrades the performance of other advanced services or traditional voice band services, if Level 3 fails to take curative action within forty-eight (48) hours or if the violation is of a character that poses an immediate and substantial threat of damage to property or injury or death to any person, or any other significant degradation, interference or impairment of BellSouth's or another entity's service, then and only in that event, BellSouth may take such action as it deems appropriate to correct the violation, including, without limitation, the interruption of electrical power to Level 3's equipment. BellSouth will endeavor, but is not required, to provide notice to Level 3 prior to the taking of such action and BellSouth shall have no liability to Level 3 for any damages arising from such action, except to the extent that such action by BellSouth constitutes willful misconduct or gross negligence.

5.11.2 For purposes of this Section, the term "significantly degrades" shall be defined as an action that noticeably impairs a service from a user's perspective. In the case of the deployment of an advanced service which significantly degrades the performance of other advanced services or traditional voice band services and Level 3 fails to take curative action within forty-eight (48) hours, then BellSouth will establish before the Commission that the technology deployment is causing the significant degradation. Any claims of network harm presented to Level 3 or, if subsequently necessary, the Commission must be supported by BellSouth with specific and verifiable information. When BellSouth so demonstrates, Level 3 shall discontinue deployment of that technology and migrate its customers to technologies that will not significantly

degrade the performance of other such services. Where the only degraded service itself is a known disturber, and the newly deployed technology satisfies at least one of the criteria for a presumption that it is acceptable for deployment under Section 47 C.F.R. 51.230, the degraded service shall not prevail against the newly-deployed technology

5.12 Personalty and its Removal. Facilities and equipment placed by Level 3 in the Collocation Space shall not become a part of the Collocation Space, even if nailed, screwed or otherwise fastened to the Collocation Space, but shall retain their status as personal property and may be removed by Level 3 at any time. Any damage caused to the Collocation Space by Level 3's employees, suppliers, agents or representatives during the removal of such property shall be promptly repaired by Level 3 at its sole expense. If Level 3 decides to remove equipment from its Collocation Space and the removal requires no physical change, BellSouth will bill Level 3 a Supplemental Application Fee (Administrative Only Application Fee) as set forth in Exhibit B. This non-recurring fee will be billed on the date that BellSouth provides an Application Response.

5.13 Alterations. Under no condition shall Level 3 or any person acting on behalf of Level 3 make any rearrangement, modification, augment, improvement, addition, and/or other alteration which could affect in any way space, power, HVAC, and/or safety considerations to the Collocation Space or the Premises, hereinafter referred to individually or collectively as "Augments", without the express written consent of BellSouth, which shall not be unreasonably withheld. The cost of any such Augment shall be paid by Level 3. Any such Augment shall require an application and will result in the assessment of an application fee, which will be billed by BellSouth on the date that BellSouth provides Level 3 with an Application Response.

5.14 Janitorial Service. Level 3 shall be responsible for the general upkeep of its Collocation Space. Level 3 shall arrange directly with a BellSouth Certified Supplier for janitorial services applicable to Caged Collocation Space. BellSouth shall provide a list of such suppliers on a site-specific basis, upon request.

## 6. Ordering and Preparation of Collocation Space

6.1 If any state or federal regulatory agency imposes procedures or intervals applicable to Level 3 and BellSouth that are different from the procedures or intervals set forth in this Section, whether now in effect or that become effective after execution of this Agreement, those procedures or intervals shall supersede the requirements set forth herein for that jurisdiction for all applications that are submitted for the first time after the effective date thereof.

6.2 Initial Application. For Level 3 or Level 3's Guest(s) initial equipment placement, Level 3 shall submit to BellSouth a Physical Expanded Interconnection Application Document (Initial Application). The Initial Application is considered Bona Fide when it is complete and accurate, meaning that all of the required fields on the application

are completed with the appropriate type of information. An application fee will apply to each application submitted by Level 3, which will be billed by BellSouth on the date that BellSouth provides Level 3 with an Application Response.

6.3 Subsequent Application. In the event Level 3 or Level 3's Guest(s) desires to modify the use of the Collocation Space after a BFFO, Level 3 shall complete an application that contains all of the detailed information associated with an Augment to the Collocation Space, as defined in Section 5.13 of this Attachment (Subsequent Application). The Subsequent Application is considered Bona Fide when it is complete and accurate, meaning that all of the required fields on the Subsequent Application are completed with the appropriate type of information associated with the Augment. BellSouth shall determine what modifications, if any, to the Premises are required to accommodate the change requested by Level 3 in the application. Such modifications to the Premises may include, but are not limited to: floor loading changes, changes necessary to meet HVAC requirements, changes to power plant requirements, equipment additions, etc.

6.3.1 Subsequent Application Fee. The application fee paid by Level 3 for its request for an Augment shall be dependent upon the level of assessment needed for the Augment requested. Where the Subsequent Application does not require assessment for provisioning or construction work but requires administrative costs by BellSouth, a Subsequent Application Fee (Administrative Only Application Fee) will be required as set forth in Exhibit B. This Administrative Only Application Fee will be applicable in instances such as Transfer of Ownership of the Collocation Space, Removal of Equipment from the Collocation Space, modification to an application prior to BFFO and V-to-P Conversion (In Place). The fee for a Subsequent Application where the Augment requested has limited effect (e.g., requires limited assessment but no capital expenditure by BellSouth as sufficient cable support structure, HVAC, power and terminations are available) shall be the Subsequent Application Fee as set forth in Exhibit B. If the modification requires capital expenditure, an Initial Application Fee shall apply. This nonrecurring fee will be billed on the date that BellSouth provides Level 3 with an Application Response.

6.4 Space Preferences. If Level 3 has previously requested and received a Space Availability Report for the Premises, Level 3 may submit up to three (3) space preferences on its application by identifying the specific space identification numbers referenced on the Space Availability Report for the space it is requesting. In the event BellSouth cannot accommodate the Level 3's preference(s), Level 3 may accept the space allocated by BellSouth or cancel its application and submit another application requesting additional space preferences for the same central office. This application will be treated as a new application and an application fee will apply. The application fee will be billed by BellSouth on the date that BellSouth provides Level 3 with an Application Response.

6.5 Space Availability Notification.

6.5.1 Unless otherwise specified, BellSouth will respond to an application within ten (10) calendar days as to whether space is available or not available within a requested Premises. BellSouth will also respond as to whether the application is Bona Fide and if it is not Bona Fide, the items necessary to cause the application to become Bona Fide. If the amount of space requested is not available, BellSouth will notify Level 3 of the amount of space that is available and no application fee will apply. When BellSouth's response includes an amount of space less than that requested by Level 3 or space that is configured differently, no application fee will apply. If Level 3 decides to accept the available space, Level 3 must resubmit its application to reflect the actual space available, including the configuration of the space, prior to submitting a BFFO. When Level 3 resubmits its application, BellSouth will bill Level 3 the appropriate application fee.

6.5.2 BellSouth will respond to a Florida or Tennessee application within fifteen (15) calendar days as to whether space is available or not available within a Premises. BellSouth will also respond as to whether the application is Bona Fide and if it is not Bona Fide, the items necessary to cause the application to become Bona Fide. If a lesser amount of space than requested is available, BellSouth will provide an Application Response for the amount of space that is available and bill Level 3 an appropriate application fee on the date that BellSouth provides the Application Response. When BellSouth's Application Response includes an amount of space less than that requested by Level 3 or space that is configured differently, if Level 3 decides to accept the available space, Level 3 must amend its application to reflect the actual space available, including the configuration of the space, prior to submitting a BFFO.

6.5.3 Denial of Application. If BellSouth notifies Level 3 that no space is available (Denial of Application), BellSouth will not assess an application fee to Level 3. After notifying Level 3 that BellSouth has no available space in the requested Premises, BellSouth will allow Level 3, upon request, to tour the entire Premises within ten (10) calendar days of such Denial of Application. In order to schedule this tour within ten (10) calendar days, the request for the tour of the Premises must be received by BellSouth within five (5) calendar days of the Denial of Application.

6.6 Filing of Petition for Waiver. Upon Denial of Application, BellSouth will timely file a petition with the Commission pursuant to 47 U.S.C. § 251(c)(6). BellSouth shall provide to the Commission any information requested by that Commission. Such information shall include which space, if any, BellSouth or any of BellSouth's affiliates have reserved for future use and a detailed description of the specific future uses for which the space has been reserved. Subject to an appropriate nondisclosure agreement or provision, BellSouth shall permit Level 3 to inspect any floor plans or diagrams that BellSouth provides to the Commission.

6.7 Waiting List. On a first-come, first-served basis, governed by the date of receipt of an application or Letter of Intent, BellSouth will maintain a waiting list of requesting carriers who have either received a Denial of Application or, where it is publicly

known that the Premises is out of space, have submitted a Letter of Intent to collocate in that Premises. BellSouth will notify the telecommunications carriers on the waiting list that can be accommodated by the amount of space that becomes available, according to the position of the telecommunications carriers on said waiting list.

6.7.1 In Florida, on a first-come, first-served basis, governed by the date of receipt of an application or Letter of Intent, BellSouth will maintain a waiting list of requesting carriers who have either received a Denial of Application or, where it is publicly known that the Premises is out of space, have submitted a Letter of Intent to collocate in that Premises. Sixty (60) calendar days prior to space becoming available, if known, BellSouth will notify the Commission and the telecommunications carriers on the waiting list by mail when space becomes available according to the position of each telecommunications carrier on said waiting list. If BellSouth does not know sixty (60) calendar days in advance of when space will become available, BellSouth will notify the Commission and the telecommunications carriers on the waiting list within two (2) business days of the determination that space is available. A telecommunications carrier that, upon denial of physical collocation, requests virtual collocation shall be automatically placed on the waiting list.

6.7.2 When space becomes available, Level 3 must submit an updated, complete, and correct application to BellSouth within thirty (30) calendar days of notification by BellSouth that space will be available in the Premises previously out of space. If Level 3 has originally requested caged Collocation Space and cageless Collocation Space becomes available, Level 3 may refuse such space and notify BellSouth in writing within the thirty (30) day timeframe that Level 3 wants to maintain its place on the waiting list, without accepting the available cageless Collocation Space. Level 3 may accept an amount of space less than its originally requested space by submitting an application as set forth above, and upon request, may maintain its position on the waiting list for the remaining space that was initially requested. If Level 3 does not submit an application or notify BellSouth in writing as described above, BellSouth will offer the space to the next telecommunications carrier on the waiting list and remove Level 3 from the waiting list. Upon request, BellSouth will advise Level 3 as to its position on the waiting list.

6.8 Public Notification. BellSouth will maintain on its Interconnection Services website a notification document that will indicate all Premises that are without available space. BellSouth shall update such document within ten (10) calendar days of the date that BellSouth becomes aware that insufficient space is available to accommodate physical collocation. BellSouth will also post a document on its Interconnection Services website that contains a general notice when space has become available in a Premises previously on the space exhaust list.

6.9 Application Response.

6.9.1 In Alabama, Georgia, Kentucky, Louisiana, Mississippi, North Carolina, and South Carolina, when space has been determined to be available for caged or cageless

arrangements, BellSouth will provide an Application Response within twenty (20) calendar days of receipt of a Bona Fide application. The Application Response will include, at a minimum, the configuration of the space, the Cable Installation Fee, Cable Records Fee, and any other applicable space preparation fees, as described in Section 8.

6.9.2 In Florida and Tennessee, within fifteen (15) calendar days of receipt of a Bona Fide application, when space has been determined to be available or when a lesser amount of space than that requested is available, then with respect to the space available, BellSouth will provide an Application Response including sufficient information to enable Level 3 to place a Firm Order. The Application Response will include, at a minimum, the configuration of the space, the Cable Installation Fee, Cable Records Fee, and the space preparation fees, as described in Section 8. When Level 3 submits ten (10) or more applications within ten (10) calendar days, the initial fifteen (15) calendar day response interval will increase by ten (10) calendar days for every additional ten (10) applications or fraction thereof.

6.10 Application Modifications.

6.10.1 Level 3 may make an application modification or revision to (1) modifications to Customer Information, (2) Contact Information or, (3) Billing Contact Information, prior to a BFFO. However, any other modifications or revisions made prior to a BFFO will be treated as a revised application and handled as a revised application with respect to the response and provisioning intervals. BellSouth will charge Level 3 the appropriate application fee associated with the level of assessment performed by BellSouth. If the modification requires no labor or capital expenditure by BellSouth, but BellSouth must perform an assessment of the application to evaluate whether or not BellSouth would be required to perform necessary infrastructure or provisioning activities, then an Administrative Only Application Fee shall apply. The fee for an application modification where the modification requested has limited effect (e.g., requires labor expenditure but no capital expenditure by BellSouth and where sufficient cable support structure, HVAC, power and terminations are available) shall be the Subsequent Application Fee as set forth in Exhibit B. A modification involving a capital expenditure by BellSouth shall require Level 3 to submit the application with an Initial Application Fee. This nonrecurring fee will be billed by BellSouth on the date that BellSouth provides Level 3 with an Application Response.

6.11 Bona Fide Firm Order.

6.11.1 Level 3 shall indicate its intent to proceed with equipment installation in a BellSouth Premises by submitting a Bona Fide Firm Order (BFFO) to BellSouth. The BFFO must be received by BellSouth no later than thirty (30) calendar days after BellSouth's Application Response to Level 3's Bona Fide Application or Level 3's application will expire.

6.11.2 BellSouth will establish a Firm Order date based upon the date BellSouth is in receipt of Level 3's BFFO. BellSouth will acknowledge the receipt of Level 3's BFFO within seven (7) calendar days of receipt, so that Level 3 will have positive confirmation that its BFFO has been received. BellSouth's response to a BFFO will include a Firm Order Confirmation, which contains the Firm Order date. No revisions can be made to a BFFO.

7. Construction and Provisioning

7.1 Construction and Provisioning Intervals.

7.1.1 In Florida and Tennessee, BellSouth will complete construction for collocation arrangements as soon as possible within a maximum of ninety (90) calendar days from receipt of a BFFO or as agreed to by the Parties. For Augments requested to the Collocation Space after initial space completion, BellSouth will complete construction for collocation arrangements as soon as possible within a maximum of forty-five (45) calendar days from receipt of a BFFO or as agreed to by the Parties. If BellSouth does not believe that construction will be completed within the relevant timeframe and BellSouth and Level 3 cannot agree upon a completion date, within forty-five (45) calendar days of receipt of the BFFO for an initial request, and within thirty (30) calendar days of receipt of the BFFO for an Augment, BellSouth may seek an extension from the Commission.

7.1.2 In Alabama, Georgia, Kentucky, Louisiana, Mississippi, North Carolina, South Carolina, BellSouth will complete construction for caged collocation arrangements under ordinary conditions as soon as possible within a maximum of ninety (90) calendar days from receipt of a BFFO or as agreed to by the Parties. BellSouth will complete construction for cageless collocation arrangements under ordinary conditions as soon as possible within a maximum of sixty (60) calendar days from receipt of a BFFO and ninety (90) calendar days from receipt of a BFFO for extraordinary conditions, or as agreed to by the Parties. Ordinary conditions are defined as space available with only minor changes to support systems required such as, but not limited to, HVAC, cabling and the power plant. Extraordinary conditions shall include, but not be limited to, major BellSouth equipment rearrangements or additions; power plant additions or upgrades; major mechanical additions or upgrades; a major upgrade for ADA compliance; environmental hazard or hazardous materials abatement; and arrangements for which equipment shipping intervals are extraordinary in length. The Parties may mutually agree to renegotiate an alternative provisioning interval or BellSouth may seek a waiver from this interval from the Commission.

7.1.3 When Level 3 adds equipment within initial demand parameters that requires no additional space preparation work on the part of BellSouth, then no additional charges or additional intervals will be imposed by BellSouth that would delay Level 3's operation.

7.1.4 In the states of Alabama, Georgia, Kentucky, Louisiana, Mississippi, North Carolina, and South Carolina, BellSouth will provide the reduced intervals outlined below to Level 3, when Level 3 requests an Augment after the Space Ready Date for existing physical collocation space. In such instances, Level 3 must provide an accurate front equipment view (a.k.a. rack elevation drawing) specifying bay(s) for Level 3's point of termination.

7.1.4.1 Simple Augments will be completed within twenty (20) calendar days after receipt of the BFFO for an:

- Extension of Existing AC Circuit Capacity within Arrangement Where Sufficient Circuit Capacity is Available
- Fuse Change and/or Increase or Decrease -48V DC Power from Existing ILEC BDFB

7.1.4.2 Minor Augments will be completed within forty-five (45) calendar days after receipt of the BFFO for:

- 168 DS1s Terminations at the ILEC Demarcation Frame (Databasing Only; Panels, Relay Racks and Overhead Racking Exist)
- 96 DS3s Terminations at the ILEC Demarcation Frame (Databasing Only; Panels, Relay Racks and Overhead Racking Exist)
- 99 Fiber Terminations at the ILEC Demarcation Frame (Databasing Only; Panels, Relay Racks and Overhead Racking Exist)
- Maximum of 2000 Service Ready DS0 Terminations at the ILEC Demarcation Frame (Databasing Only; Panels, Relay Racks and Overhead Racking Exist)

7.1.4.3 Intermediate Augments will be completed within sixty (60) calendar days after receipt of the BFFO for:

- 168 DS1s (Databasing and Installation of Termination Panels, Relay Racks or Additional Structure as Required)
- 96 DS3s (Databasing and Installation of Termination Panels, Relay Racks or Additional Structure as Required)
- 99 Fiber Terminations (Databasing and Installation of Termination Panels, Relay Racks or Additional Structure as Required)
- 2000 DS0s (Databasing and Installation of Termination Panels, Relay Racks or Additional Structure as Required)
- Install Cable Racking or Other Support Structures as Required to Support Co-Carrier Cross Connects (Adequate Floor or Ceiling Structural Capacity Exists and Support/Protection Structure for Fiber Patch Cord is Excluded)

7.1.4.4 Major Augments – Physical Collocation will be completed within ninety (90) calendar days after BFFO and includes all requests for additional physical collocation space (caged or cageless).

7.1.4.5 Major Augments – Virtual Collocation will be completed within seventy-five (75) calendar days after BFFO and includes all requests for additional virtual collocation space.

7.1.4.6 If Level 3 submits an augment application request that includes two augment items from the same category in Sections 7.1.4.1, 7.1.4.2, and 7.1.4.3 above, the augment interval associated with the next highest augment category will apply (e.g., if two items from the minor augment category are requested on the same request, then an interval of sixty (60) calendar days from the receipt of the BFFO would apply, which is the interval associated with the intermediate category).

7.1.4.7 If Level 3 submits an augment application request that includes three augment items from the same category in Sections 7.1.4.1, 7.1.4.2, and 7.1.4.3 above, the major augment interval of ninety (90) calendar days from the receipt of the BFFO would apply (e.g., if three items from the simple augment category are requested on the same request for a physical collocation arrangement, then an interval of ninety (90) calendar days from the receipt of the BFFO would apply, which is the major physical augment interval; likewise if three items from the simple augment category are requested on the same request for a virtual collocation arrangement, then an interval of seventy-five (75) calendar days from the receipt of the BFFO would apply, which is the major virtual augment interval; ).

7.1.4.8 If Level 3 submits an augment application request that includes one augment item from two separate categories in Sections 7.1.4.1, 7.1.4.2 and 7.1.4.3 above, the augment interval associated with the highest augment category will apply (e.g., if an item from the minor augment category and an item from the intermediate augment category are requested on the same request, then an interval of sixty (60) calendar days from the receipt of the BFFO would apply, which is the interval associated with the intermediate augment category).

7.1.4.9 All Augments not expressly included in the Simple, Minor, Intermediate or Major categories as outlined above will be placed into the appropriate category as negotiated by Level 3 and BellSouth. If Level 3 and BellSouth are unable to determine the appropriate category through negotiation, then the appropriate major augment category identified in Sections 7.1.4.4 and 7.1.4.5 would apply based on whether the augment request is for Level 3's physical or virtual collocation arrangement.

7.1.4.10 Individual application fees associated with simple, minor and intermediate augment applications are contained in Exhibit B. The appropriate application fee will be assessed to Level 3 at the time BellSouth provides Level 3 with the Application Response. Level 3 will be assessed a Subsequent Application Fee for all Major Augment applications (Major Augments are defined above in Sections 7.1.4.4 and 7.1.4.5). The Subsequent Application Fee is also reflected in Exhibit B of this Attachment.

7.2 Joint Planning. Joint planning between BellSouth and Level 3 will commence within a maximum of twenty (20) calendar days from BellSouth's receipt of a BFFO. BellSouth will provide the preliminary design of the Collocation Space and the equipment configuration requirements as reflected in the Bona Fide application and affirmed in the BFFO. The Collocation Space completion interval will be provided to Level 3 during the joint planning meeting.

7.3 Permits. Each Party or its agent(s) will diligently pursue filing for the permits required for the scope of work to be performed by that Party or its agent(s) within ten (10) calendar days of the completion of the finalized construction design and specifications.

7.4 Acceptance Walkthrough. Level 3 will schedule and complete an acceptance walkthrough of each Collocation Space with BellSouth within fifteen (15) calendar days of BellSouth's notification to Level 3 that the Collocation Space is ready for occupancy. In the event Level 3 fails to complete an acceptance walkthrough within this fifteen (15) day interval, the Collocation Space shall be deemed accepted by Level 3 on the Space Ready Date. BellSouth will correct any deviations to Level 3's original or jointly amended design and/or specification requirements within seven (7) calendar days after the walkthrough, unless the Parties jointly agree upon a different timeframe.

7.5 Circuit Facility Assignments (CFAs). Unless otherwise specified, BellSouth will provide CFAs to Level 3 prior to the applicable provisioning interval set forth herein (Provisioning Interval) for those Premises in which Level 3 has a physical collocation arrangement with no POT bay or with a POT bay provided by BellSouth. BellSouth cannot provide CFAs to Level 3 prior to the Provisioning Interval for those Premises in which Level 3 has a physical collocation arrangement with a POT bay provided by Level 3 or a virtual collocation arrangement, until Level 3 provides BellSouth with the following information:

7.5.1 For a physical collocation arrangement with a Level 3-provided POT bay - a complete layout of the POT panels (equipment inventory update (EIU) form) showing locations, speeds, etc.

7.5.2 For a virtual collocation arrangement - a complete layout of Level 3's equipment (equipment inventory update (EIU) form), including the locations of the low speed ports and the specific frame terminations to which the equipment will be wired by Level 3's BellSouth Certified Supplier.

7.5.3 BellSouth cannot begin work on the CFAs until the complete and accurate EIU form is received from Level 3. If the EIU form is provided ten (10) calendar days prior to the ending date of the Provisioning Interval, then CFAs will be made available by the ending date of the Provisioning Interval. If the EIU form is not received ten (10) calendar days prior to the ending date of the Provisioning Interval, then the CFAs will be provided within ten (10) calendar days of receipt of the EIU form.

7.5.4 BellSouth will bill Level 3 a nonrecurring charge, as set forth in Exhibit B, each time Level 3 requests a resend of its CFAs for any reason other than a BellSouth error in the CFAs initially provided to Level 3.

7.6 Use of BellSouth Certified Supplier. Level 3 shall select a supplier which has been approved as a BellSouth Certified Supplier to perform all engineering and installation work. Level 3 and Level 3's BellSouth Certified Supplier must follow and comply with all of the reasonable and nondiscriminatory requirements, outlined in BellSouth TR 73503, TR 73519, TR 73572, and TR 73564. In some cases, Level 3 must select separate BellSouth Certified Suppliers for those work activities associated with transmission equipment, switching equipment and power equipment. BellSouth shall provide Level 3 with a list of BellSouth Certified Suppliers, upon request The BellSouth Certified Supplier(s) shall be responsible for installing Level 3's equipment and associated components, extending power cabling to the BellSouth power distribution frame, performing operational tests after installation is complete, and notifying BellSouth's equipment engineers and Level 3 upon successful completion of installation, etc. The BellSouth Certified Supplier shall bill Level 3 directly for all work performed for Level 3 pursuant to this Attachment. BellSouth shall have no liability for, nor responsibility to pay, such charges imposed by Level 3's BellSouth Certified Supplier. BellSouth shall make available its supplier certification program to Level 3 or any supplier proposed by Level 3 and will not unreasonably withhold certification. All work performed by or for Level 3 shall conform to generally accepted industry standards.

7.7 Alarm and Monitoring. BellSouth shall place environmental alarms in the Premises for the protection of BellSouth equipment and facilities. Level 3 shall be responsible for placement, monitoring and removal of environmental and equipment alarms used to service Level 3's Collocation Space. Upon request, BellSouth will provide Level 3 with an applicable tariffed service(s) to facilitate remote monitoring of collocated equipment by Level 3. Both Parties shall use best efforts to notify the other of any verified environmental condition known to that Party.

7.8 Virtual to Physical Collocation Relocation. In the event physical Collocation Space was previously denied at a location due to technical reasons or space limitations and physical Collocation Space has subsequently become available, Level 3 may relocate its existing virtual collocation arrangement(s) to a physical collocation arrangement(s) and pay the appropriate fees associated with physical collocation and the rearrangement or reconfiguration of services terminated in the virtual collocation arrangement, as outlined in the appropriate BellSouth Tariffs. In the event BellSouth knows when additional space for physical collocation may become available at the location requested by Level 3, such information will be provided to Level 3 in BellSouth's written denial of physical collocation space. To the extent that (i) physical Collocation Space becomes available to Level 3 within one hundred eighty (180) calendar days of BellSouth's written denial of Level 3's request for physical collocation, (ii) BellSouth had knowledge that the space was going to become available, and (iii) Level 3 was not informed in the written denial that physical

Collocation Space would become available within such one hundred eighty (180) calendar days, then Level 3 may relocate its virtual collocation arrangement to a physical collocation arrangement and will receive a credit for any nonrecurring charges previously paid for such virtual collocation. Level 3 must arrange with a BellSouth Certified Supplier for the relocation of equipment from its virtual Collocation Space to its physical Collocation Space and will bear the cost of such relocation.

7.8.1 In Alabama, BellSouth will complete a relocation from virtual collocation to cageless physical collocation within sixty (60) calendar days and from virtual collocation to caged physical collocation within ninety (90) calendar days.

7.9 Virtual to Physical Conversion (In-Place). Virtual collocation arrangements may be converted to "in-place" physical arrangements if the potential conversion meets the following four criteria: 1) there is no change in the amount of equipment or the configuration of the equipment that was in the virtual collocation arrangement; 2) the conversion of the virtual collocation arrangement will not cause the equipment or the results of that conversion to be located in a space that BellSouth has reserved for its own future needs; 3) the converted arrangement does not limit BellSouth's ability to secure its own equipment and facilities due to the location of the virtual collocation arrangement; and 4) any changes to the arrangement can be accommodated by existing power, HVAC, and other requirements. Unless otherwise specified, BellSouth will complete virtual to in-place physical collocation conversions within sixty (60) calendar days from receipt of the BFFO. BellSouth will bill Level 3 an Administrative Only Application Fee as set forth in Exhibit B on the date that BellSouth provides an Application Response to Level 3.

7.9.1 In Alabama and Tennessee, BellSouth will complete Virtual to Physical Conversions (In Place) within thirty (30) calendar days from receipt of the BFFO.

7.10 Cancellation. If at any time prior to space acceptance, Level 3 cancels its order for the Collocation Space(s) (Cancellation), BellSouth will bill the applicable nonrecurring rate(s) for any and all work processes for which work has begun or been completed. In Georgia, if Level 3 cancels its order for Collocation Space at any time prior to space acceptance, BellSouth will bill Level 3 for all costs incurred prior to the date of Cancellation and for any costs incurred as a direct result of the Cancellation, not to exceed the total amount that would have been due had the order not been cancelled.

7.11 Licenses. Level 3, at its own expense, will be solely responsible for obtaining from governmental authorities, and any other appropriate agency, entity, or person, all rights, privileges, and licenses necessary or required to operate as a provider of telecommunications services to the public or to build-out, equip and/or occupy the Collocation Space.

7.12 Environmental Compliance. The Parties agree to utilize and adhere to the Environmental Hazard Guidelines identified in Exhibit A attached hereto.

7.13 Basic Telephone Service. Upon request of Level 3, BellSouth will provide basic telephone service to the Collocation Space under the rates, terms and conditions of the current tariff offering for the service requested.

## 8. Rates and Charges

8.1 Application Fee. BellSouth shall assess an application fee via a service order, which shall be issued at the time BellSouth responds that space is available pursuant to Section 6.10 (Application Response). BellSouth will bill this nonrecurring fee on the date that BellSouth provides an Application Response to Level 3.

8.1.1 In Tennessee the applicable application fee is the planning fee for both Initial Applications and Subsequent Applications placed by Level 3. BellSouth will bill this nonrecurring fee on the date that BellSouth provides an Application Response to Level 3.

8.2 Cable Installation. Cable Installation Fee(s) are assessed per entrance cable placed. This nonrecurring fee will be billed by BellSouth upon receipt of Level 3's BFFO.

8.3 Recurring Charges. If Level 3 has met the applicable fifteen (15) calendar day walkthrough interval(s) specified in Section 4, billing for recurring charges will begin upon the Space Acceptance Date. In the event that Level 3 fails to complete an acceptance walkthrough within the applicable fifteen (15) calendar day interval(s), billing for recurring charges will commence on the Space Ready Date. If Level 3 occupies the space prior to the Space Ready Date, the date Level 3 occupies the space becomes the new Space Acceptance Date and billing for recurring charges begin on that date.

8.4 Space Preparation. Space preparation fees consist of a nonrecurring charge for Firm Order processing and monthly recurring charges for central office modifications assessed per arrangement, per square foot and common systems modifications assessed per arrangement, per square foot for cageless collocation and per cage for caged collocation. Level 3 shall remit payment of the nonrecurring Firm Order processing fee coincident with submission of a BFFO. The charges recover the costs associated with preparing the Collocation Space, which includes survey, engineering of the Collocation Space, design and modification costs for network, building and support systems. In the event Level 3 opts for cageless space, the space preparation fees will be assessed based on the total floor space dedicated to Level 3 as prescribed in this Section.

8.5 Floor Space. The Floor Space Charge includes reasonable charges for lighting, HVAC, and other allocated expenses associated with maintenance of the Premises but does not include any power-related costs incurred by BellSouth. When the Collocation Space is enclosed, Level 3 shall pay floor space charges based upon the number of square feet so enclosed. When the Collocation Space is not enclosed, Level 3 shall pay floor space charges based upon the following floor space calculation:

[(depth of the equipment lineup in which the rack is placed) + (0.5 x maintenance aisle depth) + (0.5 x wiring aisle depth)] X (width of rack and spacers). For purposes of this calculation, the depth of the equipment lineup shall consider the footprint of equipment racks plus any equipment overhang. BellSouth will assign unenclosed Collocation Space in conventional equipment rack lineups where feasible. In the event Level 3's collocated equipment requires special cable racking, isolated grounding or other treatment which prevents placement within conventional equipment rack lineups, Level 3 shall be required to request an amount of floor space sufficient to accommodate the total equipment arrangement.

8.6 Power. BellSouth shall make available –48 Volt (-48V) Direct Current (DC) power for Level 3's Collocation Space at a BellSouth Power Board or BellSouth Battery Distribution Fuse Bay (BDFB) at Level 3's option within the Premises. Recurring charges for DC Power will be monthly billed on a per fused amp basis. BellSouth will revise recurring power charges to reflect a power upgrade upon notification of the completion of the upgrade by Level 3's BellSouth Certified Vendor. BellSouth will revise recurring power charges to reflect a power reduction upon BellSouth's receipt of the Power Reduction Form from Level 3 certifying the completion of the power reduction, including the removal of the power cabling by Level 3's BellSouth Certified Supplier.

8.6.1 When obtaining power from a BDFB, fuses and power cables (A&B) must be engineered (sized), and installed by Level 3's BellSouth Certified Supplier. When obtaining power from a BellSouth power board, power cables (A&B) must be engineered (sized), and installed by Level 3's BellSouth Certified Supplier. Level 3 is responsible for contracting with a BellSouth Certified Supplier for power distribution feeder cable runs from a BellSouth BDFB or BellSouth power board to Level 3's equipment. The determination of the BellSouth BDFB or BellSouth power board as the power source will be made at BellSouth's sole, but reasonable, discretion. The BellSouth Certified Supplier contracted by Level 3 must provide BellSouth with a copy of the engineering power specifications prior to the day on which Level 3's equipment becomes operational (Commencement Date). BellSouth will provide the common power feeder cable support structure between the BellSouth BDFB or BellSouth power board and Level 3's arrangement area. Level 3 shall contract with a BellSouth Certified Supplier who will be responsible for the following: dedicated power cable support structure within Level 3's arrangement, power cable feeds, and terminations of cable. Any terminations at a BellSouth power board must be performed by a BellSouth Certified Supplier. Level 3 shall comply with all applicable National Electric Code (NEC), BellSouth TR73503, Telcordia and ANSI Standards regarding power cabling, installation, and maintenance.

8.6.2 If Level 3 elects to install its own DC Power Plant, BellSouth shall provide Alternating Current (AC) power to feed Level 3's DC Power Plant. Charges for AC power will be assessed per breaker ampere per month. Rates include the provision of commercial and standby AC power. When obtaining power from a BellSouth service panel, protection devices and power cables must be engineered (sized), and installed by Level

3's BellSouth Certified Supplier except that BellSouth shall engineer and install protection devices and power cables for Adjacent Collocation. Level 3's BellSouth Certified Supplier must also provide a copy of the engineering power specifications prior to the Commencement Date. Charges for AC power shall be assessed pursuant to the rates specified in Exhibit B. AC power voltage and phase ratings shall be determined on a per location basis. At Level 3's option, Level 3 may arrange for AC power in an Adjacent Collocation arrangement from a retail provider of electrical power.

8.6.3 In Tennessee, recurring charges for -48V DC power consumption will be assessed per ampere per month based upon the engineered and installed power feed fused ampere capacity. Rates include redundant feeder fuse positions (A&B) and common cable racks to Level 3's equipment or space enclosure. Level 3 shall contract with a BellSouth Certified Supplier who will be responsible for the following: dedicated power cable support structure within Level 3's arrangement and terminations of cable within the Collocation Space.

8.6.3.1 In Tennessee, nonrecurring charges for –48V DC power distribution will be based on the common power feeder cable support structure between the BellSouth BDFB and Level 3's arrangement area.

8.6.4 In Alabama and Louisiana, Level 3 has the option to purchase power directly from an electric utility company. Under such an option, Level 3 is responsible for contracting with the electric utility company for its own power feed and meter, and is financially responsible for purchasing all equipment necessary to accomplish the arrangement, including inverters, batteries, power boards, bus bars, BDFBs, backup power supplies and cabling. The actual work to install this arrangement must be performed by a BellSouth Certified Supplier hired by Level 3. Level 3's BellSouth Certified Supplier must comply with all applicable safety codes, including the National Electric Safety Codes, in installing this power arrangement. If Level 3 previously had power supplied by BellSouth, Level 3 may request to change its arrangement to obtain power from an electric utility company by submitting a Subsequent Application. BellSouth will waive any application fee for this subsequent application if no other change was requested therein. Any floor space, cable racking, etc. utilized by Level 3 in provisioning said power will be billed on an ICB basis.

8.6.5 In South Carolina, Level 3 has the option to purchase power directly from an electric utility company where technically feasible and where space is available in a requested Premises. Under such an option, Level 3 is responsible for contracting with the electric utility company for its own power feed and meter, and is financially responsible for purchasing all equipment necessary to accomplish the arrangement, including inverters, batteries, power boards, bus bars, BDFBs, backup power supplies and power cabling. The actual work to install this arrangement must be performed by a BellSouth Certified Supplier hired by Level 3. Level 3's BellSouth Certified Supplier must comply with all applicable national, regional, state and local safety, electrical, fire and building codes, including the National Electric Safety Code standards, in installing this

power arrangement, just as BellSouth is required to comply with these codes. Level 3 must submit an application to BellSouth for the appropriate amount of Collocation Space that Level 3 requires to install this type of power arrangement. BellSouth will evaluate the request and determine if the appropriate amount of space is available within the office for the installation of Level 3's power equipment and facilities. This type of power arrangement must be located in an appropriate area in the central office that has been properly conditioned for the installation of power equipment and conforms to the applicable national, regional, state and local safety, electrical, fire and building codes. BellSouth shall waive the application fee or any other nonrecurring charge that would otherwise be due from a CLEC that decides to reconfigure an existing collocation power arrangement so as to purchase power directly from an electric utility company as provided herein. Level 3 shall be responsible for the recurring charges associated with the central office space needed for collocation of this type of power arrangement, including space required to place associated power-related equipment and facilities (i.e., batteries, generator, power meter, etc.). If there is no space available for this type of power arrangement in the requested central office, BellSouth may seek a waiver of these requirements from the Commission for the central office requested. Level 3 would still have the option to order its power needs directly from BellSouth.

8.6.6 If Level 3 requests a reduction in the amount of power that BellSouth is currently providing, Level 3 must submit a Subsequent Application. If no modification to the Collocation Space is requested other than the reduction in power, the Subsequent Application Fee for Power Reduction as set forth in Exhibit B will apply. If modifications are requested in addition to the reduction of power, the Subsequent Application Fee will apply. BellSouth will bill this nonrecurring fee on the date that BellSouth provides an Application Response.

8.6.7 In Alabama and Louisiana, if Level 3 is currently served from the BellSouth main power board and requests that its power be reconfigured to connect to a BellSouth BDFB, in a specific central office, Level 3 must submit a Subsequent Application. BellSouth will respond to such application within seven (7) calendar days and no application fee will apply.

8.7 Security Escort. A security escort will be required whenever Level 3 or its approved agent desires access to the entrance manhole or must have access to the Premises after the one accompanied site visit allowed pursuant to Section 5 prior to completing BellSouth's Security Training requirements. Rates for a security escort are assessed according to the schedule appended hereto as Exhibit B beginning with the scheduled escort time. BellSouth will wait for one-half (1/2) hour after the scheduled time for such an escort and Level 3 shall pay for such half-hour charges in the event Level 3 fails to show up. The BellSouth Access Customer Advocacy Center (ACAC) emergency access contact numbers will be provided to Level 3 for access related issues.

8.8 Cable Record charges. These charges apply for work required to build cable records in BellSouth systems. The VG/DS0 per cable record charge is for a maximum of 3600 records. The Fiber cable record charge is for a maximum of 99 records. These nonrecurring fees will be billed upon receipt of Level 3's BFFO.

8.9 Other. If no rate is identified in the contract, the rate for the specific service or function will be negotiated by the Parties upon request by either Party.

## 9. Insurance

9.1 Level 3 shall, at its sole cost and expense, procure, maintain, and keep in force insurance as specified in this Section and underwritten by insurance companies licensed to do business in the states applicable under this Agreement and having a Best's Insurance Rating of B+.

9.2 Level 3 shall maintain the following specific coverage:

9.2.1 Commercial General Liability coverage in the amount of ten million dollars ($10,000,000.00) or a combination of Commercial General Liability and Excess/Umbrella coverage totaling not less than ten million dollars ($10,000,000.00). BellSouth shall be named as an Additional Insured on the Commercial General Liability policy as specified herein.

9.2.2 Statutory Workers Compensation coverage and Employers Liability coverage in the amount of one hundred thousand dollars ($100,000.00) each accident, one hundred thousand dollars ($100,000.00) each employee by disease, and five hundred thousand dollars ($500,000.00) policy limit by disease.

9.3 All policies purchased by Level 3 shall be deemed to be primary and not contributing to or in excess of any similar coverage purchased by BellSouth. All insurance must be in effect on or before the date equipment is delivered to Premises and shall remain in effect for the term of this Attachment or until all Level 3's property has been removed from BellSouth's Premises, whichever period is longer.

9.4 Level 3 shall submit certificates of insurance reflecting the coverage required pursuant to this Section 30 business days prior to the commencement of any initial work in the Collocation Space. Failure to meet this interval may result in construction and equipment installation delays. Level 3 shall arrange for BellSouth to receive thirty (30) business days' advance notice of cancellation from Level 3's insurance company. Level 3 shall forward a certificate of insurance and notice of cancellation/non-renewal to BellSouth at the following address:

BellSouth Telecommunications, Inc.
Attn.: Risk Management Coordinator
17H53 BellSouth Center
675 W. Peachtree Street

Atlanta, Georgia 30375

9.5 Level 3 must conform to recommendations made by BellSouth's fire insurance company, if capital expenditures are not required on Level 3's part, to the extent BellSouth has agreed to, or shall hereafter agree to, such recommendations.

9.6 BellSouth shall procure and maintain insurance coverage, or will maintain a program of self insurance, at equivalent or higher levels as those imposed upon Level 3 under this Section.

9.7 Notwithstanding self-insured retentions, if Level 3's net worth exceeds five hundred million dollars ($500,000,000), Level 3 may elect to request self insurance in lieu of obtaining any of the insurance required in Sections 9.2.1 and 9.2.2. Level 3 shall provide audited financial statements to BellSouth thirty (30) calendar days prior to the commencement of any work in the Collocation Space. BellSouth shall then review such audited financial statements and respond in writing to Level 3 in the event that self insurance status is not granted to Level 3. If BellSouth approves Level 3 for self insurance, Level 3 shall annually furnish to BellSouth, and keep current, evidence of such net worth that is attested to by one of Level 3's corporate officers. The ability to self insure shall continue so long as Level 3 meets all of the requirements of this Section. If Level 3 subsequently no longer satisfies this Section, Level 3 is required to purchase insurance as indicated by Sections 9.2.1 and 9.2.2. 9.9 Failure to comply with the provisions of this Section will be deemed a material breach of this Attachment.

9.8 Failure to comply with the provisions of this Section will be deemed a material breach of this Attachment.

## 10. Mechanics Liens

10.1 If any mechanics lien or other liens shall be filed against property of either Party (BellSouth or Level 3), or any improvement thereon by reason of or arising out of any labor or materials furnished or alleged to have been furnished or to be furnished to or for the other Party or by reason of any changes, or additions to said property made at the request or under the direction of the other Party, the other Party directing or requesting those changes shall, within thirty (30) business days after receipt of written notice from the Party against whose property said lien has been filed, either pay such lien or cause the same to be bonded off the affected property in the manner provided by law. The Party causing said lien to be placed against the property of the other shall also defend, at its sole cost and expense, on behalf of the other, any action, suit or proceeding which may be brought for the enforcement of such liens and shall pay any damage and discharge any judgment entered thereon.

## 11. Inspections

11.1 BellSouth may conduct an inspection of Level 3's equipment and facilities in the Collocation Space(s) prior to the activation of facilities between Level 3's equipment and equipment of BellSouth. BellSouth may conduct an inspection if Level 3 adds equipment and may otherwise conduct routine inspections at reasonable intervals mutually agreed upon by the Parties. BellSouth shall provide Level 3 with a minimum of forty-eight (48) hours or two (2) business days, whichever is greater, advance notice of all such inspections. All costs of such inspection shall be borne by BellSouth.

## 12. Security and Safety Requirements

12.1 Unless otherwise specified, consistent with FCC requirements, Level 3 will be required, at its own expense, to conduct a statewide investigation of criminal history records for each Level 3 employee hired in the past five years being considered for work on the Premises, for the states/counties where the Level 3 employee has worked and lived for the past five years. Where state law does not permit statewide collection or reporting, an investigation of the applicable counties is acceptable. Level 3 shall not be required to perform this investigation if an affiliated company of Level 3 has performed an investigation of the Level 3 employee seeking access, if such investigation meets the criteria set forth above. This requirement will not apply if Level 3 has performed a pre-employment statewide investigation of criminal history records of the Level 3 employee for the states/counties where the Level 3 employee has worked and lived for the past five years or, where state law does not permit a statewide investigation, an investigation of the applicable counties.

12.2 Level 3 will be required to administer to its personnel assigned to the Premises security training provided on the BellSouth website, and as outlined in the CLEC Security Training documents.

12.3 Level 3 shall provide its employees and agents with picture identification, which must be worn and visible at all times while in the Collocation Space or other areas in or around the Premises. The photo identification card shall bear, at a minimum, the employee's name and photo, and the Level 3 employee will also have other photo identification identifying employment with Level 3. BellSouth reserves the right to remove from its Premises any employee of Level 3 not possessing identification issued by Level 3 or who has violated any of BellSouth's policies as outlined in the CLEC Security Training documents Level 3 shall hold BellSouth harmless for any damages resulting from such removal of its personnel from BellSouth Premises. Level 3 shall be solely responsible for ensuring that any Guest(s) of Level 3 is in compliance with all subsections of this Section.

12.4 Level 3 shall not assign to the Premises any personnel with records of felony criminal convictions. Level 3 shall not assign to the Premises any personnel with records of misdemeanor convictions, except for misdemeanor traffic violations, without advising

BellSouth of the nature and gravity of the offense(s). BellSouth on a reasonable and nondiscriminatory basis, reserves the right to refuse building access to any Level 3 personnel who have been identified to have misdemeanor criminal convictions. Notwithstanding the foregoing, in the event that Level 3 chooses not to advise BellSouth of the nature and gravity of any misdemeanor conviction, Level 3 may, in the alternative, certify to BellSouth that it shall not assign to the Premises any personnel with records of misdemeanor convictions (other than misdemeanor traffic violations).

12.4.1 Level 3 shall not knowingly assign to the Premises any individual who was a former employee of BellSouth and whose employment with BellSouth was terminated for a criminal offense whether or not BellSouth sought prosecution of the individual for the criminal offense.

12.4.2 Level 3 shall not knowingly assign to the Premises any individual who was a former supplier of BellSouth and whose access to a Premises was revoked due to commission of a criminal offense whether or not BellSouth sought prosecution of the individual for the criminal offense.

12.5 For each Level 3 employee or agent hired by Level 3 within five years of being considered for work on the Premises, who requires access to a Premises pursuant to this Attachment, Level 3 shall furnish BellSouth, prior to an employee or agent gaining such access, a certification that the aforementioned background check and security training were completed. The certification will contain a statement that no felony convictions were found and certify that the employee completed the security training. If the employee's criminal history includes misdemeanor convictions, Level 3 will disclose the nature of the convictions to BellSouth at that time. In the alternative, Level 3 may certify to BellSouth that it shall not assign to the Premises any personnel with records of misdemeanor convictions other than misdemeanor traffic violations.

12.5.1 For all other Level 3 employees requiring access to a Premises pursuant to this Attachment, Level 3 shall furnish BellSouth, prior to an employee gaining such access, a certification that the employee is not subject to the requirements of Section 12.5 above and that security training was completed by the employee.

12.6 At BellSouth's request, Level 3 shall promptly remove from Premises any employee of Level 3 BellSouth does not wish to grant access to its Premises 1) pursuant to any investigation conducted by BellSouth or 2) prior to the initiation of an investigation if an employee of Level 3 is found interfering with the property or personnel of BellSouth or another collocated telecommunications carrier, provided that an investigation shall promptly be commenced by BellSouth.

12.7 Security Violations. BellSouth reserves the right to interview Level 3's employees, agents, or suppliers in the event of wrongdoing in or around BellSouth's property or involving BellSouth's or another collocated telecommunications carrier's property or personnel, provided that BellSouth shall provide reasonable notice to Level 3's

Security representative of such interview. Level 3 and its suppliers shall reasonably cooperate with BellSouth's investigation into allegations of wrongdoing or criminal conduct committed by, witnessed by, or involving Level 3's employees, agents, or suppliers. Additionally, BellSouth reserves the right to bill Level 3 for all reasonable costs associated with investigations involving its employees, agents, or suppliers if it is established and mutually agreed in good faith that Level 3's employees, agents, or suppliers are responsible for the alleged act. BellSouth shall bill Level 3 for BellSouth property, which is stolen or damaged where an investigation determines the culpability of Level 3's employees, agents, or suppliers and where Level 3 agrees, in good faith, with the results of such investigation. Level 3 shall notify BellSouth in writing immediately in the event that Level 3 discovers one of its employees already working on the Premises is a possible security risk. Upon request of the other Party, the Party who is the employer shall discipline consistent with its employment practices, up to and including removal from BellSouth's Premises, any employee found to have violated the security and safety requirements of this Section. Level 3 shall hold BellSouth harmless for any damages resulting from such removal of its personnel from Premises.

12.8 Use of Supplies. Unauthorized use of equipment, supplies or other property by either Party, whether or not used routinely to provide telephone service will be strictly prohibited and handled appropriately. Costs associated with such unauthorized use may be charged to the offending Party, as may be all associated investigative costs.

12.9 Use of Official Lines. Except for non-toll calls necessary in the performance of their work, neither Party shall use the telephones of the other Party on the Premises. Charges for unauthorized telephone calls may be charged to the offending Party, as may be all associated investigative costs.

12.10 Accountability. Full compliance with the Security requirements of this Section shall in no way limit the accountability of either Party to the other for the improper actions of its employees.

## 13. Destruction of Collocation Space

13.1 In the event a Collocation Space is wholly or partially damaged by fire, windstorm, tornado, flood or by similar causes to such an extent as to be rendered wholly unsuitable for Level 3's permitted use hereunder, then either Party may elect within ten (10) calendar days after such damage, to terminate occupancy of the damaged Collocation Space, and if either Party shall so elect, by giving the other written notice of termination, both Parties shall stand released of and from further liability under the terms hereof. If the Collocation Space shall suffer only minor damage and shall not be rendered wholly unsuitable for Level 3's permitted use, or is damaged and the option to terminate is not exercised by either Party, BellSouth covenants and agrees to proceed promptly without expense to Level 3, except for improvements not to the property of BellSouth, to repair the damage. BellSouth shall have a reasonable time

within which to rebuild or make any repairs, and such rebuilding and repairing shall be subject to delays caused by storms, shortages of labor and materials, government regulations, strikes, walkouts, and causes beyond the control of BellSouth, which causes shall not be construed as limiting factors, but as exemplary only. Level 3 may, at its own expense, accelerate the rebuild of its collocated space and equipment provided however that a BellSouth Certified Supplier is used and the necessary space preparation has been completed. If Level 3's acceleration of the project increases the cost of the project, then those additional charges will be incurred by Level 3. Where allowed and where practical, Level 3 may erect a temporary facility while BellSouth rebuilds or makes repairs. In all cases where the Collocation Space shall be rebuilt or repaired, Level 3 shall be entitled to an equitable abatement of rent and other charges, depending upon the unsuitability of the Collocation Space for Level 3's permitted use, until such Collocation Space is fully repaired and restored and Level 3's equipment installed therein (but in no event later than thirty (30) calendar days after the Collocation Space is fully repaired and restored). Where Level 3 has placed an Adjacent Arrangement pursuant to Section 3.4, Level 3 shall have the sole responsibility to repair or replace said Adjacent Arrangement provided herein. Pursuant to this Section, BellSouth will restore the associated services to the Adjacent Arrangement.

## 14 Eminent Domain

14.1 If the whole of a Collocation Space or Adjacent Arrangement shall be taken by any public authority under the power of eminent domain, then this Attachment shall terminate with respect to such Collocation Space or Adjacent Arrangement as of the day possession shall be taken by such public authority and rent and other charges for the Collocation Space or Adjacent Arrangement shall be paid up to that day with proportionate refund by BellSouth of such rent and charges as may have been paid in advance for a period subsequent to the date of the taking. If any part of the Collocation Space or Adjacent Arrangement shall be taken under eminent domain, BellSouth and Level 3 shall each have the right to terminate this Attachment with respect to such Collocation Space or Adjacent Arrangement and declare the same null and void, by written notice of such intention to the other Party within ten (10) calendar days after such taking.

## 15 Nonexclusivity

15.1 Level 3 understands that this Attachment is not exclusive and that BellSouth may enter into similar agreements with other Parties. Assignment of space pursuant to all such agreements shall be determined by space availability and made on a first come, first served basis

# ENVIRONMENTAL AND SAFETY PRINCIPLES

The following principles provide basic guidance on environmental and safety issues when applying for and establishing Physical Collocation arrangements.

## 1. GENERAL PRINCIPLES

1.1 Compliance with Applicable Law. BellSouth and Level 3 agree to comply with applicable federal, state, and local environmental and safety laws and regulations including U.S. Environmental Protection Agency (USEPA) regulations issued under the Clean Air Act (CAA), Clean Water Act (CWA), Resource Conservation and Recovery Act (RCRA), Comprehensive Environmental Response, Compensation and Liability Act (CERCLA), Superfund Amendments and Reauthorization Act (SARA), the Toxic Substances Control Act (TSCA), and OSHA regulations issued under the Occupational Safety and Health Act of 1970, as amended and NFPA and National Electrical Codes (NEC) and the NESC (Applicable Laws). Each Party shall notify the other if compliance inspections are conducted by regulatory agencies and/or citations are issued that relate to any aspect of this Attachment.

1.2 Notice. BellSouth and Level 3 shall provide notice to the other, including Material Safety Data Sheets (MSDSs), of known and recognized physical hazards or Hazardous Chemicals existing on site or brought on site. A Hazardous Chemical inventory list is posted on an OSHA Poster and updated annually at each Central Office. This Poster is normally located near the front entrance of the building or in the lounge area. Each Party is required to provide specific notice for known potential Imminent Danger conditions. Level 3 should contact 1-800-743-6737 for any BellSouth MSDS required.

1.3 Practices/Procedures. BellSouth may make available additional environmental control procedures for Level 3 to follow when working at a Premises (See Section 2, below). These practices/procedures will represent the regular work practices required to be followed by the employees and suppliers of BellSouth for environmental protection. Level 3 will require its suppliers, agents and others accessing the Premises to comply with these practices. Section 2 lists the Environmental categories where BST practices should be followed by Level 3 when operating in the Premises.

1.4 Environmental and Safety Inspections. BellSouth reserves the right to inspect the Level 3 space with proper notification. BellSouth reserves the right to stop any Level 3 work operation that imposes Imminent Danger to the environment, employees or other persons in the area or Premises.

1.5 Hazardous Materials Brought On Site. Any hazardous materials brought into, used, stored or abandoned at the Premises by Level 3 are owned by Level 3. Level 3 will indemnify BellSouth for claims, lawsuits or damages to persons or property caused by these materials. Without prior written BellSouth approval, no substantial new safety or environmental hazards can be created by Level 3 or different hazardous materials used by Level 3 at Premises. Level 3 must demonstrate adequate emergency response capabilities for its materials used or remaining at the Premises.

1.6 Spills and Releases. When contamination is discovered at a Premises, either Party discovering the condition must notify the other Party. All Spills or Releases of regulated materials will immediately

be reported by Level 3 to BellSouth.

1.7 Coordinated Environmental Plans and Permits. BellSouth and Level 3 will coordinate plans, permits or information required to be submitted to government agencies, such as emergency response plans, spill prevention control and countermeasures (SPCC) plans and community reporting. If fees are associated with filing, BellSouth and Level 3 will develop a cost sharing procedure. If BellSouth's permit or EPA identification number must be used, Level 3 must comply with all of BellSouth's permit conditions and environmental processes, including environmental "best management practices (BMP)" (see Section 2, below) and/or selection of BST disposition vendors and disposal sites.

1.8 Environmental and Safety Indemnification. BellSouth and Level 3 shall indemnify, defend and hold harmless the other Party from and against any claims (including, without limitation, third-party claims for personal injury or death or real or personal property damage), judgments, damages (including direct and indirect damages and punitive damages), penalties, fines, forfeitures, costs, liabilities, interest and losses arising in connection with the violation or alleged violation of any Applicable Law or contractual obligation or the presence or alleged presence of contamination arising out of the acts or omissions of the indemnifying Party, its agents, suppliers, or employees concerning its operations at the Premises.

## 2. CATEGORIES FOR CONSIDERATION OF ENVIRONMENTAL ISSUES

2.1 When performing functions that fall under the following Environmental categories on BellSouth's Premises, Level 3 agrees to comply with the applicable sections of the current issue of BellSouth's Environmental and Safety Methods and Procedures (M&Ps), incorporated herein by this reference. Level 3 further agrees to cooperate with BellSouth to ensure that Level 3's employees, agents, and/or suppliers are knowledgeable of and satisfy those provisions of BellSouth's Environmental M&Ps which apply to the specific Environmental function being performed by Level 3, its employees, agents and/or suppliers.

2.2 The most current version of the reference documentation must be requested from Level 3's BellSouth Regional Contract Manager (RCM) (f/k/a Account Team Collocation Coordinator – ATCC).

| ENVIRONMENTAL CATEGORIES | ENVIRONMENTAL ISSUES | ADDRESSED BY THE FOLLOWING DOCUMENTATION |
|---|---|---|
| Disposal of hazardous material or other regulated material (e.g., batteries, fluorescent tubes, solvents & cleaning materials) | Compliance with all applicable local, state, & federal laws and regulations<br><br>Pollution liability insurance | Std T&C 450<br>Fact Sheet Series 17000<br><br>Std T&C 660-3<br><br>Approved Environmental |

| | | |
|---|---|---|
| | EVET approval of supplier | Vendor List (Contact RCM Representative) |
| Emergency response | Hazmat/waste release/spill fire safety emergency | Fact Sheet Series 17000<br>Building Emergency Operations Plan (EOP) (specific to and located on Premises) |
| Contract labor/outsourcing for services with environmental implications to be performed on BellSouth Premises (e.g., disposition of hazardous material/waste; maintenance of storage tanks) | Compliance with all applicable local, state, & federal laws and regulations<br><br>Performance of services in accordance with BST's environmental M&Ps<br><br>Insurance | Std T&C 450<br><br>Std T&C 450-B<br>(Contact RCM Representative for copy of appropriate E/S M&Ps.)<br><br>Std T&C 660 |
| Transportation of hazardous material | Compliance with all applicable local, state, & federal laws and regulations<br><br>Pollution liability insurance<br><br>EVET approval of supplier | Std T&C 450<br>Fact Sheet Series 17000<br><br>Std T&C 660-3<br><br>Approved Environmental Vendor List (Contact RCM Representative) |
| Maintenance/operations work which may produce a waste<br><br>Other maintenance work | Compliance with all applicable local, state, & federal laws and regulations<br><br>Protection of BST employees and equipment | Std T&C 450<br><br>29CFR 1910.147 (OSHA Standard)<br>29CFR 1910 Subpart O (OSHA Standard) |
| Janitorial services | All waste removal and disposal must conform to all applicable federal, state and local regulations<br><br>All Hazardous Material and Waste<br><br>Asbestos notification and protection of employees and | Procurement Manager (CRES Related Matters)-BST Supply Chain Services<br><br>Fact Sheet Series 17000<br><br>GU-BTEN-001BT, Chapter 3<br>BSP 010-170-001BS |

Version 1Q03: 02/28/03

| | | |
|---|---|---|
| | equipment | (Hazcom) |
| Manhole cleaning | Compliance with all applicable local, state, & federal laws and regulations<br><br>Pollution liability insurance<br><br>EVET approval of supplier | Std T&C 450<br>Fact Sheet 14050<br>BSP 620-145-011PR<br>Issue A, August 1996<br><br>Std T&C 660-3<br><br>Approved Environmental Vendor List (Contact RCM Representative) |
| Removing or disturbing building materials that may contain asbestos | Asbestos work practices | GU-BTEN-001BT, Chapter 3 For questions regarding removing or disturbing materials that contain asbestos, call the BellSouth Building Service Center:<br>AL, MS, TN, KY & LA (local area code) 557-6194<br>FL, GA, NC & SC (local area code) 780-2740 |

## 3. DEFINITIONS

Generator. Under RCRA, the person whose act produces a Hazardous Waste, as defined in 40 CFR 261, or whose act first causes a Hazardous Waste to become subject to regulation. The Generator is legally responsible for the proper management and disposal of Hazardous Wastes in accordance with regulations.

Hazardous Chemical. As defined in the U.S. Occupational Safety and Health (OSHA) hazard communication standard (29 CFR 1910.1200), any chemical which is a health hazard or physical hazard.

Hazardous Waste. As defined in Section 1004 of RCRA.

Imminent Danger. Any conditions or practices at a Premises which are such that a danger exists which could reasonably be expected to cause immediate death or serious harm to people or immediate significant damage to the environment or natural resources.

Spill or Release. As defined in Section 101 of CERCLA.

## 4. ACRONYMS

RCM – Regional Collocation Manager (f/k/a Account Team Collocation Coordinator)

BST – BellSouth Telecommunications

Version 1Q03: 02/28/03

CRES – Corporate Real Estate and Services (formerly PS&M)

DEC/LDEC - Department Environmental Coordinator/Local Department Environmental Coordinator

E/S – Environmental/Safety

EVET - Environmental Vendor Evaluation Team

GU-BTEN-001BT - BellSouth Environmental Methods and Procedures

NESC - National Electrical Safety Codes

P&SM - Property & Services Management

Std T&C - Standard Terms & Conditions

| COLLOCATION - Alabama | | | | | | | | | | | | | Attachment: 4 | | Exhibit: B | |
|---|---|---|---|---|---|---|---|---|---|---|---|---|---|---|---|---|
| CATEGORY | RATE ELEMENTS | Interim | Zone | BCS | USOC | RATES ($) | | | | | Svc Order Submitted Elec per LSR | Svc Order Submitted Manually per LSR | Incremental Charge - Manual Svc Order vs. Electronic-1st | Incremental Charge - Manual Svc Order vs. Electronic-Add'l | Incremental Charge - Manual Svc Order vs. Electronic-Disc 1st | Incremental Charge - Manual Svc Order vs. Electronic-Disc Add'l |
| | | | | | | Rec | Nonrecurring | | Nonrecurring Disconnect | | OSS Rates ($) | | | | | |
| | | | | | | | First | Add'l | First | Add'l | SOMEC | SOMAN | SOMAN | SOMAN | SOMAN | SOMAN |
| PHYSICAL COLLOCATION | | | | | | | | | | | | | | | | |
| | Physical Collocation - Initial Application Fee | | | CLO | PE1BA | | 1,879.48 | | 0.51 | | | | | | | |
| | Physical Collocation - Subsequent Application Fee | | | CLO | PE1CA | | 1,566.60 | | | | | | | | | |
| | Physical Collocation Administrative Only - Application Fee | | | CLO | PE1BL | | 742.15 | | | | | | | | | |
| | Physical Collocation - Space Preparation - Firm Order Processing | | | CLO | PE1SJ | | 600.71 | | | | | | | | | |
| | Physical Collocation - Space Preparation - C.O. Modification per square ft. | | | CLO | PE1SK | 1.96 | | | | | | | | | | |
| | Physical Collocation - Space Preparation, Common Systems Modifications-Cageless, per square foot | | | CLO | PE1SL | 2.62 | | | | | | | | | | |
| | Physical Collocation - Space Preparation - Common Systems Modifications-Caged, per cage | | | CLO | PE1SM | 88.86 | | | | | | | | | | |
| | Physical Collocation - Cable Installation, Pricing, non-recurring charge, per Entrance Cable | | | CLO | PE1BD | | 859.71 | | 22.49 | | | | | | | |
| | Physical Collocation - Floor Space, per sq feet | | | CLO | PE1PJ | 3.22 | | | | | | | | | | |
| | Physical Collocation - Cable Support Structure, per Entrance Cable | | | CLO | PE1PM | 17.11 | | | | | | | | | | |
| | Physical Collocation - Power, -48V DC Power - per Fused Amp | | | CLO | PE1PL | 7.83 | | | | | | | | | | |
| | Physical Collocation - Power Reconfiguration Only, Application Fee | I | | CLO | PE1PR | | 398.76 | | | | | | | | | |
| | Physical Collocation - Power, 120V AC Power, Single Phase, per Breaker Amp | | | CLO | PE1FB | 4.91 | | | | | | | | | | |
| | Physical Collocation - Power, 240V AC Power, Single Phase, per Breaker Amp | | | CLO | PE1FD | 9.84 | | | | | | | | | | |
| | Physical Collocation - Power, 120V AC Power, Three Phase, per Breaker Amp | | | CLO | PE1FE | 14.74 | | | | | | | | | | |
| | Physical Collocation - Power, 277V AC Power, Three Phase, per Breaker Amp | | | CLO | PE1FG | 34.06 | | | | | | | | | | |
| | Physical Collocation - 2-wire cross-connect, loop, provisioning | | | UEANL,UEQ, UNLDX, UNCNX, UEA, UCL, UAL, UHL, UDC, UDN, UNCVX | PE1P2 | 0.03 | 12.30 | 11.80 | 6.03 | 5.44 | | | | | | |
| | Physical Collocation - 4-wire cross-connect, loop, provisioning | | | UEA, UHL, UNCVX, UNCDX, UCL, UDL | PE1P4 | 0.05 | 12.39 | 11.87 | 6.39 | 5.73 | | | | | | |
| | Physical Collocation -DS1 Cross-Connect for Physical Collocation, provisioning | | | WDS1L,WDS1S, UXTD1, ULDD1, USLEL, UNLD1, UEPEX, UEPDX, USL, ULC, U1TD1, UNC1X | PE1P1 | 1.11 | 22.03 | 15.93 | 6.40 | 5.79 | | | | | | |
| | Physical Collocation - DS3 Cross-Connect, provisioning | | | UE3,U1TD3, UXTD3, UXTS1, UNC3X, UNCSX, ULDD3, U1TS1,ULDS1, UNLD3 | PE1P3 | 14.16 | 20.89 | 15.20 | 7.38 | 5.92 | | | | | | |
| | Physical Collocation - 2-Fiber Cross-Connect | | | CLO, ULDO3, ULD12, ULD48, U1TO3, U1T12, U1T48, UDLO3, UDL12, UDF | PE1F2 | 2.81 | 20.89 | 15.20 | 7.38 | 5.92 | | | | | | |
| | Physical Collocation - 4-Fiber Cross-Connect | | | ULDO3, ULD12, ULD48, U1TO3, U1T12, U1T48, UDLO3, UDL12, UDF | PE1F4 | 4.99 | 25.55 | 19.86 | 9.71 | 8.25 | | | | | | |

| COLLOCATION - Alabama | | | | | | | | | | | | | | Attachment: 4 | | Exhibit: B | |
|---|---|---|---|---|---|---|---|---|---|---|---|---|---|---|---|---|---|
| CATEGORY | | RATE ELEMENTS | Interim | Zone | BCS | USOC | RATES ($) | | | | | Svc Order Submitted Elec per LSR | Svc Order Submitted Manually per LSR | Incremental Charge - Manual Svc Order vs. Electronic-1st | Incremental Charge - Manual Svc Order vs. Electronic-Add'l | Incremental Charge - Manual Svc Order vs. Electronic-Disc 1st | Incremental Charge - Manual Svc Order vs. Electronic-Disc Add'l |
| | | | | | | | Rec | Nonrecurring | | Nonrecurring Disconnect | | OSS Rates ($) | | | | | |
| | | | | | | | | First | Add'l | First | Add'l | SOMEC | SOMAN | SOMAN | SOMAN | SOMAN | SOMAN |
| | | Physical Collocation - Space enclosure, welded wire, first 100 square feet | | | CLO | PE1BW | 156.33 | | | | | | | | | | |
| | | Physical Collocation - Space enclosure, welded wire, each additional 50 square feet | | | CLO | PE1CW | 15.34 | | | | | | | | | | |
| | | Physical Collocation - Security Access System - Security System per Central Office | | | CLO | PE1AX | 45.70 | | | | | | | | | | |
| | | Physical Collocation -Security Access System - New Card Activation, per Card Activation (First), per State | | | CLO | PE1A1 | 0.05 | 27.79 | | | | | | | | | |
| | | Physical Collocation-Security Access System-Administrative Change, existing Access Card, per Request, per State, per Card | | | CLO | PE1AA | | 7.79 | | | | | | | | | |
| | | Physical Collocation - Security Access System - Replace Lost or Stolen Card, per Card | | | CLO | PE1AR | | 22.78 | | | | | | | | | |
| | | Physical Collocation - Security Access - Initial Key, per Key | | | CLO | PE1AK | | 13.10 | | | | | | | | | |
| | | Physical Collocation - Security Access - Key, Replace Lost or Stolen Key, per Key | | | CLO | PE1AL | | 13.10 | | | | | | | | | |
| | | Physical Collocation - Space Availability Report, per Central Office Requested | | | CLO | PE1SR | | 1,075.17 | | | | | | | | | |
| | | Physical Collocation - CFA Information Resend Request, per premises, per request | | | CLO | PE1C9 | | 77.56 | | | | | | | | | |
| | | Physical Collocation - Cable Records, per request | | | CLO | PE1CR | | 759.29 | 488.11 | 133.00 | | | | | | | |
| | | Physical Collocation, Cable Records, VG/DS0 Cable, per cable record (maximum 3600 records) | | | CLO | PE1CD | | 326.92 | | 189.12 | | | | | | | |
| | | Physical Collocation, Cable Records, VG/DS0 Cable, per each 100 pair | | | CLO | PE1CO | | 4.81 | | 5.90 | | | | | | | |
| | | Physical Collocation, Cable Records, DS1, per T1 TIE | | | CLO | PE1C1 | | 2.25 | | 2.76 | | | | | | | |
| | | Physical Collocation, Cable Records, DS3, per T3 TIE | | | CLO | PE1C3 | | 7.88 | | 9.66 | | | | | | | |
| | | Physical Collocation - Cable Records, Fiber Cable, per cable record (maximum 99 records) | | | CLO | PE1CB | | 84.49 | | 77.13 | | | | | | | |
| | | Physical Collocation - Security Escort for Basic Time - normally scheduled work, per half hour | | | CLO | PE1BT | | 16.93 | 10.73 | | | | | | | | |
| | | Physical Collocation - Security Escort for Overtime - outside of normally scheduled working hours on a scheduled work day, per half hour | | | CLO | PE1OT | | 22.05 | 13.86 | | | | | | | | |
| | | Physical Collocation - Security Escort for Premium Time - outside of scheduled work day, per half hour | | | CLO | PE1PT | | 27.17 | 16.98 | | | | | | | | |
| | | Physical Collocation - Virtual to Physical Collocation Relocation, per Voice Grade Circuit | | | CLO | PE1BV | | 33.00 | | | | | | | | | |
| | | Physical Collocation - Virtual to Physical Collocation Relocation, per DSO Circuit | | | CLO | PE1BO | | 33.00 | | | | | | | | | |
| | | Physical Collocation - Virtual to Physical Collocation Relocation, per DS1 Circuit | | | CLO | PE1B1 | | 52.00 | | | | | | | | | |
| | | Physical Collocation - Virtual to Physical Collocation Relocation, per DS3 Circuit | | | CLO | PE1B3 | | 52.00 | | | | | | | | | |
| | | Physical Collocation - Virtual to Physical Collocation In-Place, Per Voice Grade Circuit | | | CLO | PE1BR | | 23.00 | | | | | | | | | |
| | | Physical Collocation Virtual to Physical Collocation In-Place, Per DSO Circuit | | | CLO | PE1BP | | 23.00 | | | | | | | | | |
| | | Physical Collocation - Virtual to Physical Collocation In-Place, Per DS1 Circuit | | | CLO | PE1BS | | 33.00 | | | | | | | | | |
| | | Physical Collocation - Virtual to Physical Collocation In-Place, per DS3 Circuit | | | CLO | PE1BE | | 37.00 | | | | | | | | | |
| | | Physical Collocation - Virtual to Physical Collocation In-Place/Relocation, space cable facilities assigned to Collocation Space, per 700 cable pairs or fraction thereof | | | CLO | PE1B7 | | 592.00 | | | | | | | | | |
| | | Physical Collocation - Co-Carrier Cross Connects/Direct Connect - Fiber Cable Support Structure, per linear ft. | | | CLO | PE1ES | 0.0011 | | | | | | | | | | |
| | | Physical Collocation - Co-Carrier Cross Connect/Direct Connect - Copper/Coax Cable Support Structure, per lin. ft. | | | CLO | PE1DS | 0.0016 | | | | | | | | | | |

| COLLOCATION - Alabama | | | | | | | | | | | | | | Attachment: 4 | | Exhibit: B | |
|---|---|---|---|---|---|---|---|---|---|---|---|---|---|---|---|---|---|
| CATEGORY | | RATE ELEMENTS | Interim | Zone | BCS | USOC | RATES ($) | | | | | Svc Order Submitted Elec per LSR | Svc Order Submitted Manually per LSR | Incremental Charge - Manual Svc Order vs. Electronic-1st | Incremental Charge - Manual Svc Order vs. Electronic-Add'l | Incremental Charge - Manual Svc Order vs. Electronic-Disc 1st | Incremental Charge - Manual Svc Order vs. Electronic-Disc Add'l |
| | | | | | | | Rec | Nonrecurring | | Nonrecurring Disconnect | | OSS Rates ($) | | | | | |
| | | | | | | | | First | Add'l | First | Add'l | SOMEC | SOMAN | SOMAN | SOMAN | SOMAN | SOMAN |
| | | Physical Collocation - Co-Carrier Cross Connects/Direct Connect, Application Fee, per application | | | CLO | PE1DT | | 584.22 | | | | | | | | | |
| | | Physical Collocation - Copper Entrance Cable per Cable (CO manhole to vault splice) | | | CLO | PE1EA | | 1,196.424 | 42.721 | | | | | | | | |
| | | Physical Collocation - Copper Entrance Cable Installation, per 100 Pairs | | | CLO | PE1EB | | 18.103 | | | | | | | | | |
| | | Physical Collocation - Fiber Entrance Cable per Cable (CO manhole to vault splice) | | | CLO | PE1EC | | 1,000.913 | 42.721 | | | | | | | | |
| | | Physical Collocation - Fiber Entrance Cable Installation, per Fiber | | | CLO | PE1ED | | 7.241 | | | | | | | | | |
| | | Physical Collocation - Application Cost, Simple Augment | | | CLO | PE1KS | | 594.41 | | 1.21 | | | | | | | |
| | | Physical Collocation - Application Cost, Minor Augment | | | CLO | PE1KM | | 833.47 | | 1.21 | | | | | | | |
| | | Physical Collocation - Application Cost, Intermediate Augment | | | CLO | PE1K1 | | 1,058.00 | | 1.21 | | | | | | | |
| | | Physical Collocation - Co-Carrier Cross Connect/Direct Connect - Fiber Cable Support Structure, per cable | I | | CLO | PE1DU | | 535.37 | | | | | | | | | |
| | | Physical Collocation - Co-Carrier Cross Connect/Direct Connect - Copper/Coax Cable Support Structure, per cable | I | | CLO | PE1DV | | 535.37 | | | | | | | | | |
| ADJACENT COLLOCATION | | | | | | | | | | | | | | | | | |
| | | Adjacent Collocation - Space Charge per Sq. Ft. | | | CLOAC | PE1JA | 0.14 | | | | | | | | | | |
| | | Adjacent Collocation - Electrical Facility Charge per Linear Ft. | | | CLOAC | PE1JC | 5.41 | | | | | | | | | | |
| | | Adjacent Collocation - 2-Wire Cross-Connects | | | UEA,UHL,UDL,UCL | PE1P2 | 0.02 | 12.30 | 11.80 | 6.03 | 5.44 | | | | | | |
| | | Adjacent Collocation - 4-Wire Cross-Connects | | | UEA,UHL,UDL,UCL | PE1P4 | 0.04 | 12.39 | 11.87 | 6.39 | 5.73 | | | | | | |
| | | Adjacent Collocation - DS1 Cross-Connects | | | UEA,UHL,UDL,UCL | PE1P1 | 1.03 | 22.03 | 15.93 | 6.40 | 5.79 | | | | | | |
| | | Adjacent Collocation - DS3 Cross-Connects | | | UEA,UHL,UDL,UCL | PE1P3 | 13.95 | 20.89 | 15.20 | 7.38 | 5.92 | | | | | | |
| | | Adjacent Collocation - 2-Fiber Cross-Connect | | | CLOAC | PE1F2 | 2.36 | 20.89 | 15.20 | 7.38 | 5.92 | | | | | | |
| | | Adjacent Collocation - 4-Fiber Cross-Connect | | | CLOAC | PE1F4 | 4.52 | 25.55 | 19.86 | 9.71 | 8.25 | | | | | | |
| | | Adjacent Collocation - Application Fee | | | CLOAC | PE1JB | | 1,576.69 | | 0.51 | | | | | | | |
| | | Adjacent Collocation - 120V, Single Phase Standby Power Rate per AC Breaker Amp | | | CLOAC | PE1FB | 4.91 | | | | | | | | | | |
| | | Adjacent Collocation - 240V, Single Phase Standby Power Rate per AC Breaker Amp | | | CLOAC | PE1FD | 9.84 | | | | | | | | | | |
| | | Adjacent Collocation - 120V, Three Phase Standby Power Rate per AC Breaker Amp | | | CLOAC | PE1FE | 14.74 | | | | | | | | | | |
| | | Adjacent Collocation - 277V, Three Phase Standby Power Rate per AC Breaker Amp | | | CLOAC | PE1FG | 34.06 | | | | | | | | | | |
| VIRTUAL COLLOCATION | | | | | | | | | | | | | | | | | |
| | | Virtual Collocation - Application Fee | | | AMTFS | EAF | | 1,205.26 | | 0.51 | | | | | | | |
| | | Virtual Collocation Administrative Only - Application Fee | I | | AMTFS | VE1AF | | 742.15 | | | | | | | | | |
| | | Virtual Collocation - Cable Installation Cost, per cable | | | AMTFS | ESPCX | | 859.71 | | 22.49 | | | | | | | |
| | | Virtual Collocation - Floor Space, per sq. ft. | | | AMTFS | ESPVX | 3.22 | | | | | | | | | | |
| | | Virtual Collocation - Power, per fused amp | | | AMTFS | ESPAX | 7.83 | | | | | | | | | | |
| | | Virtual Collocation - Cable Support Structure, per entrance cable | | | AMTFS | ESPSX | 14.97 | | | | | | | | | | |
| | | Virtual Collocation - 2-wire Cross Connects (loop) | | | UEANL,UEA,UDN,UDC,UAL,UHL,UCL,UEQ, UNCVX, UNCDX, UNCNX | UEAC2 | 0.03 | 12.30 | 11.80 | 6.03 | 5.44 | | | | | | |
| | | Virtual Collocation - 4-wire Cross Connects (loop) | | | UEA,UHL,UCL,UDL, UAL, UDN, UNCVX, UNCDX | UEAC4 | 0.05 | 12.39 | 11.87 | 6.39 | 5.73 | | | | | | |
| | | Virtual Collocation - 2-Fiber Cross Connects | | | UDL12, UDLO3, U1T48, U1T12, U1T03, ULDO3, ULD12, ULD48, UDF | CNC2F | 2.84 | 20.89 | 15.20 | 7.38 | 5.92 | | | | | | |

| COLLOCATION - Alabama | | | | | | | | | | | | | | Attachment: 4 | | Exhibit: B | |
|---|---|---|---|---|---|---|---|---|---|---|---|---|---|---|---|---|---|
| CATEGORY | | RATE ELEMENTS | Interim | Zone | BCS | USOC | RATES ($) | | | | | Svc Order Submitted Elec per LSR | Svc Order Submitted Manually per LSR | Incremental Charge - Manual Svc Order vs. Electronic-1st | Incremental Charge - Manual Svc Order vs. Electronic-Add'l | Incremental Charge - Manual Svc Order vs. Electronic-Disc 1st | Incremental Charge - Manual Svc Order vs. Electronic-Disc Add'l |
| | | | | | | | Rec | Nonrecurring | | Nonrecurring Disconnect | | OSS Rates ($) | | | | | |
| | | | | | | | | First | Add'l | First | Add'l | SOMEC | SOMAN | SOMAN | SOMAN | SOMAN | SOMAN |
| | | Virtual Collocation - 4-Fiber Cross Connects | | | UDL12, UDLO3, U1T48, U1T12, U1T03, ULDO3, ULD12, ULD48, UDF | CNC4F | 5.69 | 25.55 | 19.86 | 9.71 | 8.25 | | | | | | |
| | | Virtual collocation - Special Access & UNE, cross-connect per DS1 | | | USL,ULC, ULR, UXTD1, UNC1X, ULDD1, U1TD1, USLEL, UNLD1, UEPEX, UEPDX | CNC1X | 1.11 | 22.03 | 15.93 | 6.40 | 5.79 | | | | | | |
| | | Virtual collocation - Special Access & UNE, cross-connect per DS3 | | | USL,UE3, U1TD3, UXTS1, UXTD3, UNC3X, UNCSX, ULDD3, U1TS1, ULDS1, UDLSX, UNLD3 | CND3X | 14.16 | 20.89 | 15.20 | 7.38 | 5.92 | | | | | | |
| | | Virtual Collocation - Co-Carrier Cross Connects - Fiber Cable Support Structure, per linear foot | | | AMTFS | VE1CB | 0.0026 | | | | | | | | | | |
| | | Virtual Collocation - Co-Carrier Cross Connects - Copper/Coax Cable Support Structure, per linear ft | | | AMTFS | VE1CD | 0.0038 | | | | | | | | | | |
| | | Virtual Collocation - Co-Carrier Cross Connects - Fiber Cable Support Structure,per cable | | | AMTFS | VE1CC | | 535.37 | | | | | | | | | |
| | | Virtual Collocation - Co-Carrier Cross Connects - Copper/Coax Cable Support Structure, per cable | | | AMTFS | VE1CE | | 535.37 | | | | | | | | | |
| | | Virtual Collocation Cable Records - per request | | | AMTFS | VE1BA | | 759.29 | 488.11 | 133.00 | | | | | | | |
| | | Virtual Collocation Cable Records - VG/DS0 Cable, per cable record | | | AMTFS | VE1BB | | 326.92 | 326.92 | 189.12 | | | | | | | |
| | | Virtual Collocaiton Cable Records - VG/DS0 Cable, per each 100 pair | | | AMTFS | VE1BC | | 4.81 | | 5.90 | | | | | | | |
| | | Virtual Collocation Cable Records - DS1, per T1TIE | | | AMTFS | VE1BD | | 2.25 | | 2.76 | | | | | | | |
| | | Virtual Collocation Cable Records - DS3, per T3TIE | | | AMTFS | VE1BE | | 7.88 | | 9.66 | | | | | | | |
| | | Virtual Collocation Cable Records - Fiber Cable, per 99 fiber records | | | AMTFS | VE1BF | | 84.49 | | 77.13 | | | | | | | |
| | | Virtual collocation - Security Escort - Basic, per half hour | | | AMTFS | SPTBX | | 16.93 | 10.73 | | | | | | | | |
| | | Virtual collocation - Security Escort - Overtime, per half hour | | | AMTFS | SPTOX | | 22.05 | 13.86 | | | | | | | | |
| | | Virtual collocation - Security Escort - Premium, per half hour | | | AMTFS | SPTPX | | 27.17 | 16.98 | | | | | | | | |
| | | Virtual collocation - Maintenance in CO - Basic, per half hour | | | AMTFS | CTRLX | | 27.93 | 10.73 | | | | | | | | |
| | | Virtual collocation - Maintenance in CO - Overtime, per half hour | | | AMTFS | SPTOM | | 36.47 | 13.86 | | | | | | | | |
| | | Virtual collocation - Maintenance in CO - Premium per half hour | | | AMTFS | SPTPM | | 45.02 | 16.98 | | | | | | | | |
| | | Virtual Collocation - Request Resend of CFA Information, per CLLI | | | AMTFS | VE1QR | | 77.56 | | | | | | | | | |

| COLLOCATION - Florida | | | | | | | | | | | | | | Attachment: 4 | | Exhibit: B | |
|---|---|---|---|---|---|---|---|---|---|---|---|---|---|---|---|---|---|
| CATEGORY | | RATE ELEMENTS | Interl m | Zone | BCS | USOC | RATES ($) | | | | | Svc Order Submitted Elec per LSR | Svc Order Submitted Manually per LSR | Incremental Charge - Manual Svc Order vs. Electronic-1st | Incremental Charge - Manual Svc Order vs. Electronic-Add'l | Incremental Charge - Manual Svc Order vs. Electronic-Disc 1st | Incremental Charge - Manual Svc Order vs. Electronic-Disc Add'l |
| | | | | | | | Rec | Nonrecurring | | Nonrecurring Disconnect | | OSS Rates ($) | | | | | |
| | | | | | | | | First | Add'l | First | Add'l | SOMEC | SOMAN | SOMAN | SOMAN | SOMAN | SOMAN |
| PHYSICAL COLLOCATION | | | | | | | | | | | | | | | | | |
| | | Physical Collocation - Initial Application Fee | | | CLO | PE1BA | | 2,597.00 | | | | | | | | | |
| | | Physical Collocation - Subsequent Application Fee | | | CLO | PE1CA | | 2,236.00 | | | | | | | | | |
| | | Physical Collocation Administrative Only - Application Fee | I | | CLO | PE1BL | | 742.00 | | | | | | | | | |
| | | Physical Collocation - Space Preparation - Firm Order Processing | | | CLO | PE1SJ | | 288.93 | | | | | | | | | |
| | | Physical Collocation - Space Preparation - C.O. Modification per square ft. | | | CLO | PE1SK | 2.38 | | | | | | | | | | |
| | | Physical Collocation - Space Preparation - Common Systems Modifications-Caged, per cage | | | CLO | PE1SM | 92.55 | | | | | | | | | | |
| | | Physical Collocation - Cable Installation, Pricing, non-recurring charge, per Entrance Cable | | | CLO | PE1BD | | 1,750.00 | | 45.16 | | | | | | | |
| | | Physical Collocation - Floor Space, per sq feet | | | CLO | PE1PJ | 7.86 | | | | | | | | | | |
| | | Physical Collocation - Cable Support Structure, per Entrance Cable | | | CLO | PE1PM | 18.96 | | | | | | | | | | |
| | | Physical Collocation - Power, -48V DC Power - per Fused Amp | | | CLO | PE1PL | 7.80 | | | | | | | | | | |
| | | Physical Collocation - Power Reconfiguration Only, Application Fee | I | | CLO | PE1PR | | 399.43 | | | | | | | | | |
| | | Physical Collocation - Power, 120V AC Power, Single Phase, per Breaker Amp | | | CLO | PE1FB | 5.38 | | | | | | | | | | |
| | | Physical Collocation - Power, 240V AC Power, Single Phase, per Breaker Amp | | | CLO | PE1FD | 10.77 | | | | | | | | | | |
| | | Physical Collocation - Power, 120V AC Power, Three Phase, per Breaker Amp | | | CLO | PE1FE | 16.15 | | | | | | | | | | |
| | | Physical Collocation - Power, 277V AC Power, Three Phase, per Breaker Amp | | | CLO | PE1FG | 37.30 | | | | | | | | | | |
| | | Physical Collocation - 2-wire cross-connect, loop, provisioning | | | UEANL,UEQ, UNLDX, UNCNX, UEA, UCL, UAL, UHL, UDC, UDN, UNCVX | PE1P2 | 0.0276 | 8.22 | 7.22 | 5.74 | 4.58 | | | | | | |
| | | Physical Collocation - 4-wire cross-connect, loop, provisioning | | | UEA, UHL, UNCVX, UNCDX, UCL, UDL | PE1P4 | 0.0552 | 8.42 | 7.36 | 5.90 | 4.66 | | | | | | |
| | | Physical Collocation -DS1 Cross-Connect for Physical Collocation, provisioning | | | WDS1L,WDS1S, UXTD1, ULDD1, USLEL, UNLD1, UEPEX, UEPDX, USL, ULC, U1TD1, UNC1X | PE1P1 | 1.32 | 27.77 | 15.52 | 5.93 | 4.77 | | | | | | |
| | | Physical Collocation - DS3 Cross-Connect, provisioning | | | UE3,U1TD3, UXTD3, UXTS1, UNC3X, UNCSX, ULDD3, U1TS1,ULDS1, UNLD3 | PE1P3 | 16.81 | 25.48 | 14.05 | 7.77 | 5.01 | | | | | | |
| | | Physical Collocation - 2-Fiber Cross-Connect | | | CLO, ULDO3, ULD12, ULD48, U1TO3, U1T12, U1T48, UDLO3, UDL12, UDF | PE1F2 | 3.34 | 41.94 | 30.52 | 13.91 | 11.16 | | | | | | |
| | | Physical Collocation - 4-Fiber Cross-Connect | | | ULDO3, ULD12, ULD48, U1TO3, U1T12, U1T48, UDLO3, UDL12, UDF | PE1F4 | 5.92 | 51.30 | 39.87 | 18.29 | 15.54 | | | | | | |
| | | Physical Collocation - Space enclosure, welded wire, first 100 square feet | | | CLO | PE1BW | 189.45 | | | | | | | | | | |

| COLLOCATION - Florida | | | | | | | | | | | | | | Attachment: 4 | | Exhibit: B | |
|---|---|---|---|---|---|---|---|---|---|---|---|---|---|---|---|---|---|
| CATEGORY | | RATE ELEMENTS | Interim | Zone | BCS | USOC | RATES ($) | | | | | Svc Order Submitted Elec per LSR | Svc Order Submitted Manually per LSR | Incremental Charge - Manual Svc Order vs. Electronic-1st | Incremental Charge - Manual Svc Order vs. Electronic-Add'l | Incremental Charge - Manual Svc Order vs. Electronic-Disc 1st | Incremental Charge - Manual Svc Order vs. Electronic-Disc Add'l |
| | | | | | | | Rec | Nonrecurring | | Nonrecurring Disconnect | | OSS Rates ($) | | | | | |
| | | | | | | | | First | Add'l | First | Add'l | SOMEC | SOMAN | SOMAN | SOMAN | SOMAN | SOMAN |
| | | Physical Collocation - Space enclosure, welded wire, each additional 50 square feet | | | CLO | PE1CW | 18.58 | | | | | | | | | | |
| | | Physical Collocation - Security Access System - Security System per Central Office | | | CLO | PE1AY | 0.0105 | | | | | | | | | | |
| | | Physical Collocation -Security Access System - New Card Activation, per Card Activation (First), per State | | | CLO | PE1A1 | 0.0577 | 55.80 | | | | | | | | | |
| | | Physical Collocation-Security Access System-Administrative Change, existing Access Card, per Request, per State, per Card | | | CLO | PE1AA | | 15.65 | | | | | | | | | |
| | | Physical Collocation - Security Access System - Replace Lost or Stolen Card, per Card | | | CLO | PE1AR | | 45.75 | | | | | | | | | |
| | | Physical Collocation - Security Access - Initial Key, per Key | | | CLO | PE1AK | | 26.30 | | | | | | | | | |
| | | Physical Collocation - Security Access - Key, Replace Lost or Stolen Key, per Key | | | CLO | PE1AL | | 26.30 | | | | | | | | | |
| | | Physical Collocation - Space Availability Report, per Central Office Requested | | | CLO | PE1SR | | 2,159.00 | | | | | | | | | |
| | | Physical Collocation - CFA Information Resend Request, per premises, per request | | | CLO | PE1C9 | | 77.54 | | | | | | | | | |
| | | Physical Collocation - Cable Records, per request | | | CLO | PE1CR | | 1,525.00 | 980.22 | 267.08 | | | | | | | |
| | | Physical Collocation, Cable Records, VG/DS0 Cable, per cable record (maximum 3600 records) | | | CLO | PE1CD | | 656.50 | | 379.78 | | | | | | | |
| | | Physical Collocation, Cable Records, VG/DS0 Cable, per each 100 pair | | | CLO | PE1CO | | 9.66 | | 11.84 | | | | | | | |
| | | Physical Collocation, Cable Records, DS1, per T1 TIE | | | CLO | PE1C1 | | 4.52 | | 5.54 | | | | | | | |
| | | Physical Collocation, Cable Records, DS3, per T3 TIE | | | CLO | PE1C3 | | 15.82 | | 19.40 | | | | | | | |
| | | Physical Collocation - Cable Records, Fiber Cable, per cable record (maximum 99 records) | | | CLO | PE1CB | | 169.67 | | 154.89 | | | | | | | |
| | | Physical Collocation - Security Escort for Basic Time - normally scheduled work, per half hour | | | CLO | PE1BT | | 16.52 | 10.83 | | | | | | | | |
| | | Physical Collocation - Security Escort for Overtime - outside of normally scheduled working hours on a scheduled work day, per half hour | | | CLO | PE1OT | | 21.92 | 14.19 | | | | | | | | |
| | | Physical Collocation - Security Escort for Premium Time - outside of scheduled work day, per half hour | | | CLO | PE1PT | | 27.31 | 17.55 | | | | | | | | |
| | | Physical Collocation - Virtual to Physical Collocation Relocation, per Voice Grade Circuit | I | | CLO | PE1BV | | 33.00 | | | | | | | | | |
| | | Physical Collocation - Virtual to Physical Collocation Relocation, per DSO Circuit | I | | CLO | PE1BO | | 33.00 | | | | | | | | | |
| | | Physical Collocation - Virtual to Physical Collocation Relocation, per DS1 Circuit | I | | CLO | PE1B1 | | 52.00 | | | | | | | | | |
| | | Physical Collocation - Virtual to Physical Collocation Relocation, per DS3 Circuit | I | | CLO | PE1B3 | | 52.00 | | | | | | | | | |
| | | Physical Collocation - Virtual to Physical Collocation In-Place, Per Voice Grade Circuit | I | | CLO | PE1BR | | 23.00 | | | | | | | | | |
| | | Physical Collocation Virtual to Physical Collocation In-Place, Per DSO Circuit | I | | CLO | PE1BP | | 23.00 | | | | | | | | | |
| | | Physical Collocation - Virtual to Physical Collocation In-Place, Per DS1 Circuit | I | | CLO | PE1BS | | 33.00 | | | | | | | | | |
| | | Physical Collocation - Virtual to Physical Collocation In-Place, per DS3 Circuit | I | | CLO | PE1BE | | 37.00 | | | | | | | | | |
| | | Physical Collocation - Virtual to Physical Collocation In-Place/Relocation, space cable facilities assigned to Collocation Space, per 700 cable pairs or fraction thereof | I | | CLO | PE1B7 | | 592.00 | | | | | | | | | |
| | | Physical Collocation - Co-Carrier Cross Connects/Direct Connect - Fiber Cable Support Structure, per linear ft. | | | CLO | PE1ES | 0.001 | | | | | | | | | | |
| | | Physical Collocation - Co-Carrier Cross Connect/Direct Connect - Copper/Coax Cable Support Structure, per lin. ft. | | | CLO | PE1DS | 0.0014 | | | | | | | | | | |
| | | Physical Collocation - Co-Carrier Cross Connects/Direct Connect, Application Fee, per application | | | CLO | PE1DT | | 584.11 | | | | | | | | | |

| COLLOCATION - Florida | | | | | | | | | | | | | | Attachment: 4 | | Exhibit: B | |
|---|---|---|---|---|---|---|---|---|---|---|---|---|---|---|---|---|---|
| CATEGORY | | RATE ELEMENTS | Interim | Zone | BCS | USOC | RATES ($) | | | | | Svc Order Submitted Elec per LSR | Svc Order Submitted Manually per LSR | Incremental Charge - Manual Svc Order vs. Electronic-1st | Incremental Charge - Manual Svc Order vs. Electronic-Add'l | Incremental Charge - Manual Svc Order vs. Electronic-Disc 1st | Incremental Charge - Manual Svc Order vs. Electronic-Disc Add'l |
| | | | | | | | Rec | Nonrecurring | | Nonrecurring Disconnect | | OSS Rates ($) | | | | | |
| | | | | | | | | First | Add'l | First | Add'l | SOMEC | SOMAN | SOMAN | SOMAN | SOMAN | SOMAN |
| | | Physical Collocation - Copper Entrance Cable per Cable (CO manhole to vault splice) | | | CLO | PE1EA | | 1,169.133 | 42.712 | | | | | | | | |
| | | Physical Collocation - Copper Entrance Cable Installation, per 100 Pairs | | | CLO | PE1EB | | 18.009 | | | | | | | | | |
| | | Physical Collocation - Fiber Entrance Cable per Cable (CO manhole to vault splice) | | | CLO | PE1EC | | 973.661 | 42.712 | | | | | | | | |
| | | Physical Collocation - Fiber Entrance Cable Installation, per Fiber | | | CLO | PE1ED | | 7.24 | | | | | | | | | |
| | | Physical Collocation - Co-Carrier Cross Connect/Direct Connect - Fiber Cable Support Structure, per cable | I | | CLO | PE1DU | | 535.54 | | | | | | | | | |
| | | Physical Collocation - Co-Carrier Cross Connect/Direct Connect - Copper/Coax Cable Support Structure, per cable | I | | CLO | PE1DV | | 535.54 | | | | | | | | | |
| ADJACENT COLLOCATION | | | | | | | | | | | | | | | | | |
| | | Adjacent Collocation - Space Charge per Sq. Ft. | | | CLOAC | PE1JA | 0.1635 | | | | | | | | | | |
| | | Adjacent Collocation - Electrical Facility Charge per Linear Ft. | | | CLOAC | PE1JC | 5.11 | | | | | | | | | | |
| | | Adjacent Collocation - 2-Wire Cross-Connects | | | UEA,UHL,UDL,UCL | PE1P2 | 0.0213 | 24.69 | 23.69 | 11.77 | 10.62 | | | | | | |
| | | Adjacent Collocation - 4-Wire Cross-Connects | | | UEA,UHL,UDL,UCL | PE1P4 | 0.0426 | 24.88 | 23.83 | 12.04 | 10.80 | | | | | | |
| | | Adjacent Collocation - DS1 Cross-Connects | | | UEA,UHL,UDL,UCL | PE1P1 | 1.22 | 44.24 | 31.98 | 12.07 | 10.91 | | | | | | |
| | | Adjacent Collocation - DS3 Cross-Connects | | | UEA,UHL,UDL,UCL | PE1P3 | 16.56 | 41.94 | 30.52 | 13.91 | 11.15 | | | | | | |
| | | Adjacent Collocation - 2-Fiber Cross-Connect | | | CLOAC | PE1F2 | 2.81 | 41.94 | 30.52 | 13.91 | 11.16 | | | | | | |
| | | Adjacent Collocation - 4-Fiber Cross-Connect | | | CLOAC | PE1F4 | 5.36 | 51.30 | 39.87 | 18.29 | 15.54 | | | | | | |
| | | Adjacent Collocation - Application Fee | | | CLOAC | PE1JB | | 2,785.00 | | | | | | | | | |
| | | Adjacent Collocation - 120V, Single Phase Standby Power Rate per AC Breaker Amp | | | CLOAC | PE1FB | 5.38 | | | | | | | | | | |
| | | Adjacent Collocation - 240V, Single Phase Standby Power Rate per AC Breaker Amp | | | CLOAC | PE1FD | 10.77 | | | | | | | | | | |
| | | Adjacent Collocation - 120V, Three Phase Standby Power Rate per AC Breaker Amp | | | CLOAC | PE1FE | 16.15 | | | | | | | | | | |
| | | Adjacent Collocation - 277V, Three Phase Standby Power Rate per AC Breaker Amp | | | CLOAC | PE1FG | 37.30 | | | | | | | | | | |
| | | Adjacent Collocation - Cable Support Structure per Entrance Cable | I | | CLOAC | PE1PM | 18.96 | | | | | | | | | | |
| VIRTUAL COLLOCATION | | | | | | | | | | | | | | | | | |
| | | Virtual Collocation - Application Fee | | | AMTFS | EAF | | 4,122.00 | 1,249.00 | | | | | | | | |
| | | Virtual Collocation Administrative Only - Application Fee | I | | AMTFS | VE1AF | | 742.00 | | | | | | | | | |
| | | Virtual Collocation - Cable Installation Cost, per cable | | | AMTFS | ESPCX | 12.45 | 965.00 | | | | | | | | | |
| | | Virtual Collocation - Floor Space, per sq. ft. | | | AMTFS | ESPVX | 4.25 | | | | | | | | | | |
| | | Virtual Collocation - Power, per fused amp | | | AMTFS | ESPAX | 6.95 | | | | | | | | | | |
| | | Virtual Collocation - Cable Support Structure, per entrance cable | | | AMTFS | ESPSX | 13.35 | | | | | | | | | | |
| | | Virtual Collocation - 2-wire Cross Connects (loop) | | | UEANL,UEA,UDN,UDC,UAL,UHL,UCL,UEQ, UNCVX, UNCDX, UNCNX | UEAC2 | 0.0502 | 11.57 | | | | | | | | | |
| | | Virtual Collocation - 4-wire Cross Connects (loop) | | | UEA,UHL,UCL,UDL, UAL, UDN, UNCVX, UNCDX | UEAC4 | 0.0502 | 11.57 | | | | | | | | | |
| | | Virtual Collocation - 2-Fiber Cross Connects | | | UDL12, UDLO3, U1T48, U1T12, U1T03, ULDO3, ULD12, ULD48, UDF | CNC2F | 6.71 | 2,431.00 | | | | | | | | | |
| | | Virtual Collocation - 4-Fiber Cross Connects | | | UDL12, UDLO3, U1T48, U1T12, U1T03, ULDO3, ULD12, ULD48, UDF | CNC4F | 6.71 | 2,431.00 | | | | | | | | | |

| COLLOCATION - Florida | | | | | | | | | | | | | | Attachment: 4 | | Exhibit: B | |
|---|---|---|---|---|---|---|---|---|---|---|---|---|---|---|---|---|---|
| CATEGORY | | RATE ELEMENTS | Interim | Zone | BCS | USOC | RATES ($) | | | | | Svc Order Submitted Elec per LSR | Svc Order Submitted Manually per LSR | Incremental Charge - Manual Svc Order vs. Electronic-1st | Incremental Charge - Manual Svc Order vs. Electronic-Add'l | Incremental Charge - Manual Svc Order vs. Electronic-Disc 1st | Incremental Charge - Manual Svc Order vs. Electronic-Disc Add'l |
| | | | | | | | Rec | Nonrecurring | | Nonrecurring Disconnect | | OSS Rates ($) | | | | | |
| | | | | | | | | First | Add'l | First | Add'l | SOMEC | SOMAN | SOMAN | SOMAN | SOMAN | SOMAN |
| | | Virtual collocation - Special Access & UNE, cross-connect per DS1 | | | USL,ULC, ULR, UXTD1, UNC1X, ULDD1, U1TD1, USLEL, UNLD1, UEPEX, UEPDX | CNC1X | 7.50 | 155.00 | 14.00 | | | | | | | | |
| | | Virtual collocation - Special Access & UNE, cross-connect per DS3 | | | USL,UE3, U1TD3, UXTS1, UXTD3, UNC3X, UNCSX, ULDD3, U1TS1, ULDS1, UDLSX, UNLD3 | CND3X | 56.25 | 151.90 | 11.83 | | | | | | | | |
| | | Virtual Collocation - Co-Carrier Cross Connects - Fiber Cable Support Structure, per linear foot | | | AMTFS | VE1CB | 0.0028 | | | | | | | | | | |
| | | Virtual Collocation - Co-Carrier Cross Connects - Copper/Coax Cable Support Structure, per linear ft | | | AMTFS | VE1CD | 0.0041 | | | | | | | | | | |
| | | Virtual Collocation - Co-Carrier Cross Connects - Fiber Cable Support Structure,per cable | | | AMTFS | VE1CC | | 535.54 | | | | | | | | | |
| | | Virtual Collocation - Co-Carrier Cross Connects - Copper/Coax Cable Support Structure, per cable | | | AMTFS | VE1CE | | 535.54 | | | | | | | | | |
| | | Virtual Collocation Cable Records - per request | | | AMTFS | VE1BA | | 1,525.00 | | 267.08 | | | | | | | |
| | | Virtual Collocation Cable Records - VG/DS0 Cable, per cable record | | | AMTFS | VE1BB | | 656.50 | | 379.78 | | | | | | | |
| | | Virtual Collocation Cable Records - VG/DS0 Cable, per each 100 pair | | | AMTFS | VE1BC | | 9.66 | | 11.84 | | | | | | | |
| | | Virtual Collocation Cable Records - DS1, per T1TIE | | | AMTFS | VE1BD | | 4.52 | | 5.54 | | | | | | | |
| | | Virtual Collocation Cable Records - DS3, per T3TIE | | | AMTFS | VE1BE | | 15.82 | | 19.40 | | | | | | | |
| | | Virtual Collocation Cable Records - Fiber Cable, per 99 fiber records | | | AMTFS | VE1BF | | 169.67 | | 154.89 | | | | | | | |
| | | Virtual collocation - Security Escort - Basic, per quarter hour | | | AMTFS | SPTBQ | | 10.89 | | | | | | | | | |
| | | Virtual collocation - Security Escort - Overtime, per quarter hour | | | AMTFS | SPTOQ | | 13.64 | | | | | | | | | |
| | | Virtual collocation - Security Escort - Premium, per quarter hour | | | AMTFS | SPTPQ | | 16.40 | | | | | | | | | |
| | | Virtual Collocation - 2-wire Cross Connects (loop), per ckts | | | AMTFS | VE1R2 | 0.05 | 11.57 | | | | | | | | | |
| | | Virtual Collocation - 4-wire Cross Connects (loop), per ckts | | | AMTFS | VE1R4 | 0.05 | 11.57 | | | | | | | | | |
| | | Virtual Collocation - DS-1/DCS Cross Connects, PER CKTS | | | AMTFS | VE11S | 8.09 | 69.64 | | | | | | | | | |
| | | Virtual Collocation - DS-1.DSX Cross Connects, PER CKTS | | | AMTFS | VE11X | 0.41 | 69.64 | | | | | | | | | |
| | | Virtual Collocation - DS-3/DCS Cross Connects, PER CKT | | | AMTFS | VE13S | 59.67 | 528.00 | | | | | | | | | |
| | | Virtual Collocation - DS-3/DSC Cross Connects, PER CKT | | | AMTFS | VE13X | 10.06 | 528.00 | | | | | | | | | |
| | | Virtual collocation - Maintenance in CO - Basic, per quarter hour | | | AMTFS | SPTRE | | 10.89 | | | | | | | | | |
| | | Virtual collocation - Maintenance in CO - Overtime, per quarter hour | | | AMTFS | SPTOE | | 13.64 | | | | | | | | | |
| | | Virtual collocation - Maintenance in CO - Premium per quarter hour | | | AMTFS | SPTPE | | 16.40 | | | | | | | | | |
| | | Virtual Collocation - Request Resend of CFA Information, per CLLI | | | AMTFS | VE1QR | | 77.54 | | | | | | | | | |

| COLLOCATION - Georgia | | | | | | | | | | | | | | Attachment: 4 | | Exhibit: B | |
|---|---|---|---|---|---|---|---|---|---|---|---|---|---|---|---|---|---|
| CATEGORY | | RATE ELEMENTS | Interim | Zone | BCS | USOC | RATES ($) | | | | | Svc Order Submitted Elec per LSR | Svc Order Submitted Manually per LSR | Incremental Charge - Manual Svc Order vs. Electronic-1st | Incremental Charge - Manual Svc Order vs. Electronic-Add'l | Incremental Charge - Manual Svc Order vs. Electronic-Disc 1st | Incremental Charge - Manual Svc Order vs. Electronic-Disc Add'l |
| | | | | | | | Rec | Nonrecurring | | Nonrecurring Disconnect | | OSS Rates ($) | | | | | |
| | | | | | | | | First | Add'l | First | Add'l | SOMEC | SOMAN | SOMAN | SOMAN | SOMAN | SOMAN |
| PHYSICAL COLLOCATION | | | | | | | | | | | | | | | | | |
| | | Physical Collocation - Initial Application Fee | | | CLO | PE1BA | | 1,285.98 | | 0.59 | | | | | | | |
| | | Physical Collocation - Subsequent Application Fee | | | CLO | PE1CA | | 1,085.48 | | 0.59 | | | | | | | |
| | | Physical Collocation Administrative Only - Application Fee | | | CLO | PE1BL | | 740.83 | | | | | | | | | |
| | | Physical Collocation - Space Preparation - Firm Order Processing | | | CLO | PE1SJ | | 141.10 | | | | | | | | | |
| | | Physical Collocation - Space Preparation - C.O. Modification per square ft. | | | CLO | PE1SK | 2.01 | | | | | | | | | | |
| | | Physical Collocation - Space Preparation, Common Systems Modifications-Cageless, per square foot | | | CLO | PE1SL | 2.23 | | | | | | | | | | |
| | | Physical Collocation - Space Preparation - Common Systems Modifications-Caged, per cage | | | CLO | PE1SM | 75.61 | | | | | | | | | | |
| | | Physical Collocation - Cable Installation, Pricing, non-recurring charge, per Entrance Cable | | | CLO | PE1BD | | 736.93 | | 21.51 | | | | | | | |
| | | Physical Collocation - Floor Space, per sq feet | | | CLO | PE1PJ | 4.52 | | | | | | | | | | |
| | | Physical Collocation - Cable Support Structure, per Entrance Cable | | | CLO | PE1PM | 7.21 | | | | | | | | | | |
| | | Physical Collocation - Power, -48V DC Power - per Fused Amp | | | CLO | PE1PL | 4.78 | | | | | | | | | | |
| | | Physical Collocation - Power Reconfiguration Only, Application Fee | I | | CLO | PE1PR | | 398.80 | | | | | | | | | |
| | | Physical Collocation - Power, 120V AC Power, Single Phase, per Breaker Amp | | | CLO | PE1FB | 5.14 | | | | | | | | | | |
| | | Physical Collocation - Power, 240V AC Power, Single Phase, per Breaker Amp | | | CLO | PE1FD | 10.30 | | | | | | | | | | |
| | | Physical Collocation - Power, 120V AC Power, Three Phase, per Breaker Amp | | | CLO | PE1FE | 15.44 | | | | | | | | | | |
| | | Physical Collocation - Power, 277V AC Power, Three Phase, per Breaker Amp | | | CLO | PE1FG | 35.65 | | | | | | | | | | |
| | | Physical Collocation - 2-wire cross-connect, loop, provisioning | | | UEANL,UEQ, UNLDX, UNCNX, UEA, UCL, UAL, UHL, UDC, UDN, UNCVX | PE1P2 | 0.0197 | | | | | | | | | | |
| | | Physical Collocation - 4-wire cross-connect, loop, provisioning | | | UEA, UHL, UNCVX, UNCDX, UCL, UDL | PE1P4 | 0.0393 | | | | | | | | | | |
| | | Physical Collocation -DS1 Cross-Connect for Physical Collocation, provisioning | | | WDS1L,WDS1S, UXTD1, ULDD1, USLEL, UNLD1, UEPEX, UEPDX, USL, ULC, U1TD1, UNC1X | PE1P1 | 0.3726 | | | | | | | | | | |
| | | Physical Collocation - DS3 Cross-Connect, provisioning | | | UE3,U1TD3, UXTD3, UXTS1, UNC3X, UNCSX, ULDD3, U1TS1,ULDS1, UNLD3 | PE1P3 | 4.06 | | | | | | | | | | |
| | | Physical Collocation - 2-Fiber Cross-Connect | | | CLO, ULDO3, ULD12, ULD48, U1TO3, U1T12, U1T48, UDLO3, UDL12, UDF | PE1F2 | 1.72 | | | | | | | | | | |
| | | Physical Collocation - 4-Fiber Cross-Connect | | | ULDO3, ULD12, ULD48, U1TO3, U1T12, U1T48, UDLO3, UDL12, UDF | PE1F4 | 3.30 | | | | | | | | | | |

| COLLOCATION - Georgia | | | | | | | | | | | | | | Attachment: 4 | | Exhibit: B | |
|---|---|---|---|---|---|---|---|---|---|---|---|---|---|---|---|---|---|
| CATEGORY | | RATE ELEMENTS | Interim | Zone | BCS | USOC | RATES ($) | | | | | Svc Order Submitted Elec per LSR | Svc Order Submitted Manually per LSR | Incremental Charge - Manual Svc Order vs. Electronic-1st | Incremental Charge - Manual Svc Order vs. Electronic-Add'l | Incremental Charge - Manual Svc Order vs. Electronic-Disc 1st | Incremental Charge - Manual Svc Order vs. Electronic-Disc Add'l |
| | | | | | | | Rec | Nonrecurring | | Nonrecurring Disconnect | | OSS Rates ($) | | | | | |
| | | | | | | | | First | Add'l | First | Add'l | SOMEC | SOMAN | SOMAN | SOMAN | SOMAN | SOMAN |
| | | Physical Collocation - Space enclosure, welded wire, first 100 square feet | | | CLO | PE1BW | 160.45 | | | | | | | | | | |
| | | Physical Collocation - Space enclosure, welded wire, each additional 50 square feet | | | CLO | PE1CW | 15.74 | | | | | | | | | | |
| | | Physical Collocation - Security Access System - Security System per Central Office, per Sq. Ft. | | | CLO | PE1AY | 0.0106 | | | | | | | | | | |
| | | Physical Collocation -Security Access System - New Card Activation, per Card Activation (First), per State | | | CLO | PE1A1 | | 22.00 | | | | | | | | | |
| | | Physical Collocation - Security Access System - New Access Card Deactivation, per Card | | | CLO | PE1A4 | | 8.72 | 8.72 | | | | | | | | |
| | | Physical Collocation-Security Access System-Administrative Change, existing Access Card, per Request, per State, per Card | | | CLO | PE1AA | | 5.38 | | | | | | | | | |
| | | Physical Collocation - Security Access System - Replace Lost or Stolen Card, per Card | | | CLO | PE1AR | | 17.01 | | | | | | | | | |
| | | Physical Collocation - Security Access - Initial Key, per Key | | | CLO | PE1AK | | 13.20 | | | | | | | | | |
| | | Physical Collocation - Security Access - Key, Replace Lost or Stolen Key, per Key | | | CLO | PE1AL | | 13.20 | | | | | | | | | |
| | | Physical Collocation - Space Availability Report, per Central Office Requested | | | CLO | PE1SR | | 248.75 | | | | | | | | | |
| | | Physical Collocation - CFA Information Resend Request, per premises, per request | | | CLO | PE1C9 | | 77.42 | | | | | | | | | |
| | | Physical Collocation - Cable Records, per request | | | CLO | PE1CR | | 743.65 | 478.06 | 125.75 | | | | | | | |
| | | Physical Collocation, Cable Records, VG/DS0 Cable, per cable record (maximum 3600 records) | | | CLO | PE1CD | | 317.60 | | 177.77 | | | | | | | |
| | | Physical Collocation, Cable Records, VG/DS0 Cable, per each 100 pair | | | CLO | PE1CO | | 4.48 | | 5.30 | | | | | | | |
| | | Physical Collocation, Cable Records, DS1, per T1 TIE | | | CLO | PE1C1 | | 2.22 | | 2.63 | | | | | | | |
| | | Physical Collocation, Cable Records, DS3, per T3 TIE | | | CLO | PE1C3 | | 7.76 | | 9.19 | | | | | | | |
| | | Physical Collocation - Cable Records, Fiber Cable, per cable record (maximum 99 records) | | | CLO | PE1CB | | 83.45 | | 73.57 | | | | | | | |
| | | Physical Collocation - Security Escort for Basic Time - normally scheduled work, per half hour | | | CLO | PE1BT | | 16.52 | 10.83 | | | | | | | | |
| | | Physical Collocation - Security Escort for Overtime - outside of normally scheduled working hours on a scheduled work day, per half hour | | | CLO | PE1OT | | 21.92 | 14.19 | | | | | | | | |
| | | Physical Collocation - Security Escort for Premium Time - outside of scheduled work day, per half hour | | | CLO | PE1PT | | 27.31 | 17.55 | | | | | | | | |
| | | Physical Collocation - Virtual to Physical Collocation Relocation, per Voice Grade Circuit | | | CLO | PE1BV | | 33.00 | | | | | | | | | |
| | | Physical Collocation - Virtual to Physical Collocation Relocation, per DSO Circuit | | | CLO | PE1BO | | 33.00 | | | | | | | | | |
| | | Physical Collocation - Virtual to Physical Collocation Relocation, per DS1 Circuit | | | CLO | PE1B1 | | 52.00 | | | | | | | | | |
| | | Physical Collocation - Virtual to Physical Collocation Relocation, per DS3 Circuit | | | CLO | PE1B3 | | 52.00 | | | | | | | | | |
| | | Physical Collocation - Virtual to Physical Collocation In-Place, Per Voice Grade Circuit | | | CLO | PE1BR | | 23.00 | | | | | | | | | |
| | | Physical Collocation Virtual to Physical Collocation In-Place, Per DSO Circuit | | | CLO | PE1BP | | 23.00 | | | | | | | | | |
| | | Physical Collocation - Virtual to Physical Collocation In-Place, Per DS1 Circuit | | | CLO | PE1BS | | 33.00 | | | | | | | | | |
| | | Physical Collocation - Virtual to Physical Collocation In-Place, per DS3 Circuit | | | CLO | PE1BE | | 37.00 | | | | | | | | | |
| | | Physical Collocation - Virtual to Physical Collocation In-Place/Relocation, space cable facilities assigned to Collocation Space, per 700 cable pairs or fraction thereof | | | CLO | PE1B7 | | 592.00 | | | | | | | | | |
| | | Physical Collocation - Co-Carrier Cross Connects/Direct Connect - Fiber Cable Support Structure, per linear ft. | | | CLO | PE1ES | 0.001 | | | | | | | | | | |

| COLLOCATION - Georgia | | | | | | | | | | | | | | Attachment: 4 | | Exhibit: B | |
|---|---|---|---|---|---|---|---|---|---|---|---|---|---|---|---|---|---|
| CATEGORY | | RATE ELEMENTS | Interim | Zone | BCS | USOC | RATES ($) | | | | | Svc Order Submitted Elec per LSR | Svc Order Submitted Manually per LSR | Incremental Charge - Manual Svc Order vs. Electronic-1st | Incremental Charge - Manual Svc Order vs. Electronic-Add'l | Incremental Charge - Manual Svc Order vs. Electronic-Disc 1st | Incremental Charge - Manual Svc Order vs. Electronic-Disc Add'l |
| | | | | | | | Rec | Nonrecurring | | Nonrecurring Disconnect | | OSS Rates ($) | | | | | |
| | | | | | | | | First | Add'l | First | Add'l | SOMEC | SOMAN | SOMAN | SOMAN | SOMAN | SOMAN |
| | | Physical Collocation - Co-Carrier Cross Connect/Direct Connect - Copper/Coax Cable Support Structure, per lin. ft. | | | CLO | PE1DS | 0.0015 | | | | | | | | | | |
| | | Physical Collocation - Co-Carrier Cross Connects/Direct Connect, Application Fee, per application | | | CLO | PE1DT | | 583.18 | | | | | | | | | |
| | | Physical Collocation - Copper Entrance Cable per Cable (CO manhole to vault splice) | | | CLO | PE1EA | | 1,198.43 | 42.645 | | | | | | | | |
| | | Physical Collocation - Copper Entrance Cable Installation, per 100 Pairs | | | CLO | PE1EB | | 18.071 | | | | | | | | | |
| | | Physical Collocation - Fiber Entrance Cable per Cable (CO manhole to vault splice) | | | CLO | PE1EC | | 1,003.267 | 42.645 | | | | | | | | |
| | | Physical Collocation - Fiber Entrance Cable Installation, per Fiber | | | CLO | PE1ED | | 7.228 | | | | | | | | | |
| | | Physical Collocation - Application Cost, Simple Augment | | | CLO | PE1KS | | 594.05 | | 1.21 | | | | | | | |
| | | Physical Collocation - Application Cost, Minor Augment | | | CLO | PE1KM | | 832.95 | | 1.21 | | | | | | | |
| | | Physical Collocation - Application Cost, Intermediate Augment | | | CLO | PE1K1 | | 1,057.00 | | 1.21 | | | | | | | |
| | | Physical Collocation - Co-Carrier Cross Connect/Direct Connect - Fiber Cable Support Structure, per cable | I | | CLO | PE1DU | | 553.43 | | | | | | | | | |
| | | Physical Collocation - Co-Carrier Cross Connect/Direct Connect - Copper/Coax Cable Support Structure, per cable | I | | CLO | PE1DV | | 553.43 | | | | | | | | | |
| | | Physical Collocation, Entrance Cable Support Structure, Copper, per each 100 pairs or fraction thereof (CO Manhole to Frame) | I | | CLO | PE1EE | 0.2629 | | | | | | | | | | |
| | | Physical Collocation, Entrance Cable Installation, Copper, per Cable (CO Manhole to Frame) | I | | CLO | PE1EF | | 755.15 | | 21.51 | | | | | | | |
| | | Physical Collocation, Entrance Cable Installation, Copper, per each 100 pairs or fraction thereof (CO Manhole to Frame) | I | | CLO | PE1EG | | 9.12 | | | | | | | | | |
| ADJACENT COLLOCATION | | | | | | | | | | | | | | | | | |
| | | Adjacent Collocation - Space Charge per Sq. Ft. | | | CLOAC | PE1JA | 0.164 | | | | | | | | | | |
| | | Adjacent Collocation - Electrical Facility Charge per Linear Ft. | | | CLOAC | PE1JC | 4.01 | | | | | | | | | | |
| | | Adjacent Collocation - 2-Wire Cross-Connects | | | UEA,UHL,UDL,UCL | PE1P2 | 0.0172 | | | | | | | | | | |
| | | Adjacent Collocation - 4-Wire Cross-Connects | | | UEA,UHL,UDL,UCL | PE1P4 | 0.0344 | | | | | | | | | | |
| | | Adjacent Collocation - DS1 Cross-Connects | | | UEA,UHL,UDL,UCL | PE1P1 | 0.3608 | | | | | | | | | | |
| | | Adjacent Collocation - DS3 Cross-Connects | | | UEA,UHL,UDL,UCL | PE1P3 | 4.73 | | | | | | | | | | |
| | | Adjacent Collocation - 2-Fiber Cross-Connect | | | CLOAC | PE1F2 | 1.66 | | | | | | | | | | |
| | | Adjacent Collocation - 4-Fiber Cross-Connect | | | CLOAC | PE1F4 | 3.24 | | | | | | | | | | |
| | | Adjacent Collocation - Application Fee | | | CLOAC | PE1JB | | 1,382.19 | | 0.50 | | | | | | | |
| | | Adjacent Collocation - 120V, Single Phase Standby Power Rate per AC Breaker Amp | | | CLOAC | PE1FB | 5.14 | | | | | | | | | | |
| | | Adjacent Collocation - 240V, Single Phase Standby Power Rate per AC Breaker Amp | | | CLOAC | PE1FD | 10.30 | | | | | | | | | | |
| | | Adjacent Collocation - 120V, Three Phase Standby Power Rate per AC Breaker Amp | | | CLOAC | PE1FE | 15.44 | | | | | | | | | | |
| | | Adjacent Collocation - 277V, Three Phase Standby Power Rate per AC Breaker Amp | | | CLOAC | PE1FG | 35.65 | | | | | | | | | | |
| | | Adjacent Collocation - 240V, Three Phase Standby Power Rate per AC Breaker Amp | I | | CLOAC | PE1JD | 35.65 | | | | | | | | | | |
| VIRTUAL COLLOCATION | | | | | | | | | | | | | | | | | |
| | | Virtual Collocation - Application Fee | | | AMTFS | EAF | | 609.52 | | 0.59 | | | | | | | |
| | | Virtual Collocation Administrative Only - Application Fee | I | | AMTFS | VE1AF | | 609.52 | | | | | | | | | |
| | | Virtual Collocation - Cable Installation Cost, per cable | | | AMTFS | ESPCX | | 736.93 | | 21.51 | | | | | | | |
| | | Virtual Collocation - Floor Space, per sq. ft. | | | AMTFS | ESPVX | 4.52 | | | | | | | | | | |
| | | Virtual Collocation - Power, per fused amp | | | AMTFS | ESPAX | 4.78 | | | | | | | | | | |
| | | Virtual Collocation - Cable Support Structure, per entrance cable | | | AMTFS | ESPSX | 7.57 | | | | | | | | | | |
| | | Virtual Collocation - 2-wire Cross Connects (loop) | | | UEANL,UEA,UDN,UDC,UAL,UHL,UCL,UEQ, UNCVX, UNCDX, UNCNX | UEAC2 | 0.0188 | | | | | | | | | | |

CCCS 579 of 1253

| COLLOCATION - Georgia | | | | | | | | | | | | | | Attachment: 4 | | Exhibit: B | |
|---|---|---|---|---|---|---|---|---|---|---|---|---|---|---|---|---|---|
| CATEGORY | | RATE ELEMENTS | Interim | Zone | BCS | USOC | RATES ($) | | | | | Svc Order Submitted Elec per LSR | Svc Order Submitted Manually per LSR | Incremental Charge - Manual Svc Order vs. Electronic-1st | Incremental Charge - Manual Svc Order vs. Electronic-Add'l | Incremental Charge - Manual Svc Order vs. Electronic-Disc 1st | Incremental Charge - Manual Svc Order vs. Electronic-Disc Add'l |
| | | | | | | | Rec | Nonrecurring | | Nonrecurring Disconnect | | OSS Rates ($) | | | | | |
| | | | | | | | | First | Add'l | First | Add'l | SOMEC | SOMAN | SOMAN | SOMAN | SOMAN | SOMAN |
| | | Virtual Collocation - 4-wire Cross Connects (loop) | | | UEA,UHL,UCL,UDL, UAL, UDN, UNCVX, UNCDX | UEAC4 | 0.0375 | | | | | | | | | | |
| | | Virtual Collocation - 2-Fiber Cross Connects | | | UDL12, UDLO3, U1T48, U1T12, U1T03, ULDO3, ULD12, ULD48, UDF | CNC2F | 1.73 | | | | | | | | | | |
| | | Virtual Collocation - 4-Fiber Cross Connects | | | UDL12, UDLO3, U1T48, U1T12, U1T03, ULDO3, ULD12, ULD48, UDF | CNC4F | 3.45 | | | | | | | | | | |
| | | Virtual collocation - Special Access & UNE, cross-connect per DS1 | | | USL,ULC, ULR, UXTD1, UNC1X, ULDD1, U1TD1, USLEL, UNLD1, UEPEX, UEPDX | CNC1X | 0.3726 | | | | | | | | | | |
| | | Virtual collocation - Special Access & UNE, cross-connect per DS3 | | | USL,UE3, U1TD3, UXTS1, UXTD3, UNC3X, UNCSX, ULDD3, U1TS1, ULDS1, UDLSX, UNLD3 | CND3X | 4.06 | | | | | | | | | | |
| | | Virtual Collocation - Co-Carrier Cross Connects - Fiber Cable Support Structure, per linear foot | | | AMTFS | VE1CB | 0.0023 | | | | | | | | | | |
| | | Virtual Collocation - Co-Carrier Cross Connects - Copper/Coax Cable Support Structure, per linear ft | | | AMTFS | VE1CD | 0.0034 | | | | | | | | | | |
| | | Virtual Collocation - Co-Carrier Cross Connects - Fiber Cable Support Structure,per cable | | | AMTFS | VE1CC | | 553.43 | | | | | | | | | |
| | | Virtual Collocation - Co-Carrier Cross Connects - Copper/Coax Cable Support Structure, per cable | | | AMTFS | VE1CE | | 553.43 | | | | | | | | | |
| | | Virtual Collocation Cable Records - per request | | | AMTFS | VE1BA | | 743.65 | 478.06 | 125.75 | | | | | | | |
| | | Virtual Collocation Cable Records - VG/DS0 Cable, per cable record | | | AMTFS | VE1BB | | 317.60 | | 177.77 | | | | | | | |
| | | Virtual Collocation Cable Records - VG/DS0 Cable, per each 100 pair | | | AMTFS | VE1BC | | 4.48 | | 5.30 | | | | | | | |
| | | Virtual Collocation Cable Records - DS1, per T1TIE | | | AMTFS | VE1BD | | 2.22 | | 2.63 | | | | | | | |
| | | Virtual Collocation Cable Records - DS3, per T3TIE | | | AMTFS | VE1BE | | 7.76 | | 9.19 | | | | | | | |
| | | Virtual Collocation Cable Records - Fiber Cable, per 99 fiber records | | | AMTFS | VE1BF | | 83.45 | | 73.57 | | | | | | | |
| | | Virtual collocation - Security Escort - Basic, per half hour | | | AMTFS | SPTBX | | 16.52 | 10.83 | | | | | | | | |
| | | Virtual collocation - Security Escort - Overtime, per half hour | | | AMTFS | SPTOX | | 21.92 | 14.19 | | | | | | | | |
| | | Virtual collocation - Security Escort - Premium, per half hour | | | AMTFS | SPTPX | | 27.31 | 17.55 | | | | | | | | |
| | | Virtual collocation - Maintenance in CO - Basic, per half hour | | | AMTFS | CTRLX | | 26.54 | 10.83 | | | | | | | | |
| | | Virtual collocation - Maintenance in CO - Overtime, per half hour | | | AMTFS | SPTOM | | 35.44 | 14.19 | | | | | | | | |
| | | Virtual collocation - Maintenance in CO - Premium per half hour | | | AMTFS | SPTPM | | 44.34 | 17.55 | | | | | | | | |
| | | Virtual Collocation - Request Resend of CFA Information, per CLLI | | | AMTFS | VE1QR | | 77.42 | | | | | | | | | |
| | | Virtual Collocation, Entrance Cable Support Structure, Copper, per each 100 pairs or fraction thereof (CO Manhole to Frame) | I | | AMTFS | VE1EE | 0.23 | | | | | | | | | | |
| | | Virtual Collocation, Entrance Cable Installation, Copper, per Cable (CO Manhole to Frame) | I | | AMTFS | VE1EF | | 755.15 | | 21.51 | | | | | | | |
| | | Virtual Collocation, Entrance Cable Installation, Copper, per each 100 pairs or fraction thereof (CO Manhole to Frame) | I | | AMTFS | VE1EG | | 9.12 | | | | | | | | | |

## COLLOCATION - Kentucky

| CATEGORY | | RATE ELEMENTS | Interim | Zone | BCS | USOC | RATES ($) | | | | | Svc Order Submitted Elec per LSR | Svc Order Submitted Manually per LSR | Attachment: 4 Incremental Charge - Manual Svc Order vs. Electronic-1st | Attachment: 4 Incremental Charge - Manual Svc Order vs. Electronic-Add'l | Exhibit: B Incremental Charge - Manual Svc Order vs. Electronic-Disc 1st | Exhibit: B Incremental Charge - Manual Svc Order vs. Electronic-Disc Add'l |
|---|---|---|---|---|---|---|---|---|---|---|---|---|---|---|---|---|---|
| | | | | | | | Rec | Nonrecurring | | Nonrecurring Disconnect | | OSS Rates ($) | | | | | |
| | | | | | | | | First | Add'l | First | Add'l | SOMEC | SOMAN | SOMAN | SOMAN | SOMAN | SOMAN |
| PHYSICAL COLLOCATION | | | | | | | | | | | | | | | | | |
| | | Physical Collocation - Initial Application Fee | | | CLO | PE1BA | | 3,773.54 | | | | | | | | | |
| | | Physical Collocation - Subsequent Application Fee | | | CLO | PE1CA | | 3,145.35 | | | | | | | | | |
| | | Physical Collocation Administrative Only - Application Fee | | | CLO | PE1BL | | 742.12 | | | | | | | | | |
| | | Physical Collocation - Space Preparation - Firm Order Processing | | | CLO | PE1SJ | | 1,206.07 | | | | | | | | | |
| | | Physical Collocation - Space Preparation - C.O. Modification per square ft. | | | CLO | PE1SK | 2.32 | | | | | | | | | | |
| | | Physical Collocation - Space Preparation, Common Systems Modifications-Cageless, per square foot | | | CLO | PE1SL | 3.26 | | | | | | | | | | |
| | | Physical Collocation - Space Preparation - Common Systems Modifications-Caged, per cage | | | CLO | PE1SM | 110.57 | | | | | | | | | | |
| | | Physical Collocation - Cable Installation, Pricing, non-recurring charge, per Entrance Cable | | | CLO | PE1BD | | 1,729.11 | | 45.16 | | | | | | | |
| | | Physical Collocation - Floor Space, per sq feet | | | CLO | PE1PJ | 7.99 | | | | | | | | | | |
| | | Physical Collocation - Cable Support Structure, per Entrance Cable | | | CLO | PE1PM | 19.86 | | | | | | | | | | |
| | | Physical Collocation - Power, -48V DC Power - per Fused Amp | | | CLO | PE1PL | 8.06 | | | | | | | | | | |
| | | Physical Collocation - Power Reconfiguration Only, Application Fee | I | | CLO | PE1PR | | 399.50 | | | | | | | | | |
| | | Physical Collocation - Power, 120V AC Power, Single Phase, per Breaker Amp | | | CLO | PE1FB | 5.44 | | | | | | | | | | |
| | | Physical Collocation - Power, 240V AC Power, Single Phase, per Breaker Amp | | | CLO | PE1FD | 10.88 | | | | | | | | | | |
| | | Physical Collocation - Power, 120V AC Power, Three Phase, per Breaker Amp | | | CLO | PE1FE | 16.32 | | | | | | | | | | |
| | | Physical Collocation - Power, 277V AC Power, Three Phase, per Breaker Amp | | | CLO | PE1FG | 37.68 | | | | | | | | | | |
| | | Physical Collocation - 2-wire cross-connect, loop, provisioning | | | UEANL,UEQ, UNLDX, UNCNX, UEA, UCL, UAL, UHL, UDC, UDN, UNCVX | PE1P2 | 0.0333 | 24.68 | 23.68 | 12.14 | 10.95 | | | | | | |
| | | Physical Collocation - 4-wire cross-connect, loop, provisioning | | | UEA, UHL, UNCVX, UNCDX, UCL, UDL | PE1P4 | 0.0665 | 24.88 | 23.82 | 12.77 | 11.46 | | | | | | |
| | | Physical Collocation -DS1 Cross-Connect for Physical Collocation, provisioning | | | WDS1L,WDS1S, UXTD1, ULDD1, USLEL, UNLD1, UEPEX, UEPDX, USL, ULC, U1TD1, UNC1X | PE1P1 | 1.48 | 44.23 | 31.98 | 12.81 | 11.57 | | | | | | |
| | | Physical Collocation - DS3 Cross-Connect, provisioning | | | UE3,U1TD3, UXTD3, UXTS1, UNC3X, UNCSX, ULDD3, U1TS1,ULDS1, UNLD3 | PE1P3 | 18.89 | 41.93 | 30.51 | 14.75 | 11.83 | | | | | | |
| | | Physical Collocation - 2-Fiber Cross-Connect | | | CLO, ULDO3, ULD12, ULD48, U1TO3, U1T12, U1T48, UDLO3, UDL12, UDF | PE1F2 | 3.75 | 41.93 | 30.51 | 14.76 | 11.84 | | | | | | |
| | | Physical Collocation - 4-Fiber Cross-Connect | | | ULDO3, ULD12, ULD48, U1TO3, U1T12, U1T48, UDLO3, UDL12, UDF | PE1F4 | 6.65 | 51.29 | 39.87 | 19.41 | 16.49 | | | | | | |

| COLLOCATION - Kentucky | | | | | | | | | | | | | | Attachment: 4 | | Exhibit: B | |
|---|---|---|---|---|---|---|---|---|---|---|---|---|---|---|---|---|---|
| CATEGORY | | RATE ELEMENTS | Interim | Zone | BCS | USOC | RATES ($) | | | | | Svc Order Submitted Elec per LSR | Svc Order Submitted Manually per LSR | Incremental Charge - Manual Svc Order vs. Electronic-1st | Incremental Charge - Manual Svc Order vs. Electronic-Add'l | Incremental Charge - Manual Svc Order vs. Electronic-Disc 1st | Incremental Charge - Manual Svc Order vs. Electronic-Disc Add'l |
| | | | | | | | Rec | Nonrecurring | | Nonrecurring Disconnect | | OSS Rates ($) | | | | | |
| | | | | | | | | First | Add'l | First | Add'l | SOMEC | SOMAN | SOMAN | SOMAN | SOMAN | SOMAN |
| | | Physical Collocation - Space enclosure, welded wire, first 100 square feet | | | CLO | PE1BW | 184.97 | | | | | | | | | | |
| | | Physical Collocation - Space enclosure, welded wire, each additional 50 square feet | | | CLO | PE1CW | 18.14 | | | | | | | | | | |
| | | Physical Collocation - Security Access System, Security System, per Central Office | | | CLO | PE1AX | 76.10 | | | | | | | | | | |
| | | Physical Collocation -Security Access System - New Card Activation, per Card Activation (First), per State | | | CLO | PE1A1 | 0.058 | 55.79 | | | | | | | | | |
| | | Physical Collocation-Security Access System-Administrative Change, existing Access Card, per Request, per State, per Card | | | CLO | PE1AA | | 15.64 | | | | | | | | | |
| | | Physical Collocation - Security Access System - Replace Lost or Stolen Card, per Card | | | CLO | PE1AR | | 45.74 | | | | | | | | | |
| | | Physical Collocation - Security Access - Initial Key, per Key | | | CLO | PE1AK | | 26.29 | | | | | | | | | |
| | | Physical Collocation - Security Access - Key, Replace Lost or Stolen Key, per Key | | | CLO | PE1AL | | 26.29 | | | | | | | | | |
| | | Physical Collocation - Space Availability Report, per Central Office Requested | | | CLO | PE1SR | | 2,158.67 | | | | | | | | | |
| | | Physical Collocation - CFA Information Resend Request, per premises, per request | | | CLO | PE1C9 | | 77.55 | | | | | | | | | |
| | | Physical Collocation - Cable Records, per request | | | CLO | PE1CR | | 1,524.45 | 980.01 | 267.02 | | | | | | | |
| | | Physical Collocation, Cable Records, VG/DS0 Cable, per cable record (maximum 3600 records) | | | CLO | PE1CD | | 656.37 | | 379.70 | | | | | | | |
| | | Physical Collocation, Cable Records, VG/DS0 Cable, per each 100 pair | | | CLO | PE1CO | | 9.65 | | 11.84 | | | | | | | |
| | | Physical Collocation, Cable Records, DS1, per T1 TIE | | | CLO | PE1C1 | | 4.52 | | 5.54 | | | | | | | |
| | | Physical Collocation, Cable Records, DS3, per T3 TIE | | | CLO | PE1C3 | | 15.81 | | 19.39 | | | | | | | |
| | | Physical Collocation - Cable Records, Fiber Cable, per cable record (maximum 99 records) | | | CLO | PE1CB | | 169.63 | | 154.85 | | | | | | | |
| | | Physical Collocation - Security Escort for Basic Time - normally scheduled work, per half hour | | | CLO | PE1BT | | 33.98 | 21.53 | | | | | | | | |
| | | Physical Collocation - Security Escort for Overtime - outside of normally scheduled working hours on a scheduled work day, per half hour | | | CLO | PE1OT | | 44.26 | 27.81 | | | | | | | | |
| | | Physical Collocation - Security Escort for Premium Time - outside of scheduled work day, per half hour | | | CLO | PE1PT | | 54.54 | 34.09 | | | | | | | | |
| | | Physical Collocation - Virtual to Physical Collocation Relocation, per Voice Grade Circuit | | | CLO | PE1BV | | 33.00 | | | | | | | | | |
| | | Physical Collocation - Virtual to Physical Collocation Relocation, per DSO Circuit | | | CLO | PE1BO | | 33.00 | | | | | | | | | |
| | | Physical Collocation - Virtual to Physical Collocation Relocation, per DS1 Circuit | | | CLO | PE1B1 | | 52.00 | | | | | | | | | |
| | | Physical Collocation - Virtual to Physical Collocation Relocation, per DS3 Circuit | | | CLO | PE1B3 | | 52.00 | | | | | | | | | |
| | | Physical Collocation - Virtual to Physical Collocation In-Place, Per Voice Grade Circuit | | | CLO | PE1BR | | 23.00 | | | | | | | | | |
| | | Physical Collocation Virtual to Physical Collocation In-Place, Per DSO Circuit | | | CLO | PE1BP | | 23.00 | | | | | | | | | |
| | | Physical Collocation - Virtual to Physical Collocation In-Place, Per DS1 Circuit | | | CLO | PE1BS | | 33.00 | | | | | | | | | |
| | | Physical Collocation - Virtual to Physical Collocation In-Place, per DS3 Circuit | | | CLO | PE1BE | | 37.00 | | | | | | | | | |
| | | Physical Collocation - Virtual to Physical Collocation In-Place/Relocation, space cable facilities assigned to Collocation Space, per 700 cable pairs or fraction thereof | | | CLO | PE1B7 | | 592.00 | | | | | | | | | |
| | | Physical Collocation - Co-Carrier Cross Connects/Direct Connect - Fiber Cable Support Structure, per linear ft. | | | CLO | PE1ES | 0.0012 | | | | | | | | | | |
| | | Physical Collocation - Co-Carrier Cross Connect/Direct Connect - Copper/Coax Cable Support Structure, per lin. ft. | | | CLO | PE1DS | 0.0018 | | | | | | | | | | |

| COLLOCATION - Kentucky | | | | | | | | | | | | | | Attachment: 4 | | Exhibit: B | |
|---|---|---|---|---|---|---|---|---|---|---|---|---|---|---|---|---|---|
| CATEGORY | | RATE ELEMENTS | Interim | Zone | BCS | USOC | RATES ($) | | | | | Svc Order Submitted Elec per LSR | Svc Order Submitted Manually per LSR | Incremental Charge - Manual Svc Order vs. Electronic-1st | Incremental Charge - Manual Svc Order vs. Electronic-Add'l | Incremental Charge - Manual Svc Order vs. Electronic-Disc 1st | Incremental Charge - Manual Svc Order vs. Electronic-Disc Add'l |
| | | | | | | | Rec | Nonrecurring | | Nonrecurring Disconnect | | OSS Rates ($) | | | | | |
| | | | | | | | | First | Add'l | First | Add'l | SOMEC | SOMAN | SOMAN | SOMAN | SOMAN | SOMAN |
| | | Physical Collocation - Co-Carrier Cross Connects/Direct Connect, Application Fee, per application | | | CLO | PE1DT | | 584.20 | | | | | | | | | |
| | | Physical Collocation - Copper Entrance Cable per Cable (CO manhole to vault splice) | | | CLO | PE1EA | | 1,224.485 | 42.719 | | | | | | | | |
| | | Physical Collocation - Copper Entrance Cable Installation, per 100 Pairs | | | CLO | PE1EB | | 18.102 | | | | | | | | | |
| | | Physical Collocation - Fiber Entrance Cable per Cable (CO manhole to vault splice) | | | CLO | PE1EC | | 1,028.981 | 42.719 | | | | | | | | |
| | | Physical Collocation - Fiber Entrance Cable Installation, per Fiber | | | CLO | PE1ED | | 7.241 | | | | | | | | | |
| | | Physical Collocation - Application Cost, Simple Augment | | | CLO | PE1KS | | 594.98 | | 1.21 | | | | | | | |
| | | Physical Collocation - Application Cost, Minor Augment | | | CLO | PE1KM | | 834.26 | | 1.21 | | | | | | | |
| | | Physical Collocation - Application Cost, Intermediate Augment | | | CLO | PE1K1 | | 1,059.00 | | 1.21 | | | | | | | |
| | | Physical Collocation - Co-Carrier Cross Connect/Direct Connect - Fiber Cable Support Structure, per cable | I | | CLO | PE1DU | | 535.55 | | | | | | | | | |
| | | Physical Collocation - Co-Carrier Cross Connect/Direct Connect - Copper/Coax Cable Support Structure, per cable | I | | CLO | PE1DV | | 535.55 | | | | | | | | | |
| ADJACENT COLLOCATION | | | | | | | | | | | | | | | | | |
| | | Adjacent Collocation - Space Charge per Sq. Ft. | | | CLOAC | PE1JA | 0.0173 | | | | | | | | | | |
| | | Adjacent Collocation - Electrical Facility Charge per Linear Ft. | | | CLOAC | PE1JC | 5.35 | | | | | | | | | | |
| | | Adjacent Collocation - 2-Wire Cross-Connects | | | UEA,UHL,UDL,UCL | PE1P2 | 0.0258 | 24.68 | 23.68 | 12.14 | 10.95 | | | | | | |
| | | Adjacent Collocation - 4-Wire Cross-Connects | | | UEA,UHL,UDL,UCL | PE1P4 | 0.0515 | 24.88 | 23.82 | 12.77 | 11.46 | | | | | | |
| | | Adjacent Collocation - DS1 Cross-Connects | | | UEA,UHL,UDL,UCL | PE1P1 | 1.37 | 44.23 | 31.98 | 12.81 | 11.57 | | | | | | |
| | | Adjacent Collocation - DS3 Cross-Connects | | | UEA,UHL,UDL,UCL | PE1P3 | 18.61 | 41.93 | 30.51 | 14.75 | 11.83 | | | | | | |
| | | Adjacent Collocation - 2-Fiber Cross-Connect | | | CLOAC | PE1F2 | 3.15 | 41.93 | 30.51 | 14.76 | 11.84 | | | | | | |
| | | Adjacent Collocation - 4-Fiber Cross-Connect | | | CLOAC | PE1F4 | 6.02 | 51.29 | 39.87 | 19.41 | 16.49 | | | | | | |
| | | Adjacent Collocation - Application Fee | | | CLOAC | PE1JB | | 3,165.50 | | | | | | | | | |
| | | Adjacent Collocation - 120V, Single Phase Standby Power Rate per AC Breaker Amp | | | CLOAC | PE1FB | 5.44 | | | | | | | | | | |
| | | Adjacent Collocation - 240V, Single Phase Standby Power Rate per AC Breaker Amp | | | CLOAC | PE1FD | 10.88 | | | | | | | | | | |
| | | Adjacent Collocation - 120V, Three Phase Standby Power Rate per AC Breaker Amp | | | CLOAC | PE1FE | 16.32 | | | | | | | | | | |
| | | Adjacent Collocation - 277V, Three Phase Standby Power Rate per AC Breaker Amp | | | CLOAC | PE1FG | 37.68 | | | | | | | | | | |
| VIRTUAL COLLOCATION | | | | | | | | | | | | | | | | | |
| | | Virtual Collocation - Application Fee | | | AMTFS | EAF | | 2,419.86 | | 1.01 | | | | | | | |
| | | Virtual Collocation Administrative Only - Application Fee | I | | AMTFS | VE1AF | | 742.12 | | | | | | | | | |
| | | Virtual Collocation - Cable Installation Cost, per cable | | | AMTFS | ESPCX | | 1,729.11 | | 45.16 | | | | | | | |
| | | Virtual Collocation - Floor Space, per sq. ft. | | | AMTFS | ESPVX | 7.99 | | | | | | | | | | |
| | | Virtual Collocation - Power, per fused amp | | | AMTFS | ESPAX | 8.06 | | | | | | | | | | |
| | | Virtual Collocation - Cable Support Structure, per entrance cable | | | AMTFS | ESPSX | 17.38 | | | | | | | | | | |
| | | Virtual Collocation - 2-wire Cross Connects (loop) | | | UEANL,UEA,UDN,UDC,UAL,UHL,UCL,UEQ, UNCVX, UNCDX, UNCNX | UEAC2 | 0.0309 | 24.68 | 23.68 | 12.14 | 10.95 | | | | | | |
| | | Virtual Collocation - 4-wire Cross Connects (loop) | | | UEA,UHL,UCL,UDL, UAL, UDN, UNCVX, UNCDX | UEAC4 | 0.0619 | 24.88 | 23.82 | 12.77 | 11.46 | | | | | | |
| | | Virtual Collocation - 2-Fiber Cross Connects | | | UDL12, UDLO3, U1T48, U1T12, U1T03, ULDO3, ULD12, ULD48, UDF | CNC2F | 3.80 | 41.94 | 30.51 | 14.76 | 11.84 | | | | | | |

CCCS 583 of 1253

| COLLOCATION - Kentucky | | | | | | | | | | | | | | Attachment: 4 | | Exhibit: B | |
|---|---|---|---|---|---|---|---|---|---|---|---|---|---|---|---|---|---|
| CATEGORY | | RATE ELEMENTS | Interim | Zone | BCS | USOC | RATES ($) | | | | | Svc Order Submitted Elec per LSR | Svc Order Submitted Manually per LSR | Incremental Charge - Manual Svc Order vs. Electronic-1st | Incremental Charge - Manual Svc Order vs. Electronic-Add'l | Incremental Charge - Manual Svc Order vs. Electronic-Disc 1st | Incremental Charge - Manual Svc Order vs. Electronic-Disc Add'l |
| | | | | | | | Rec | Nonrecurring | | Nonrecurring Disconnect | | OSS Rates ($) | | | | | |
| | | | | | | | | First | Add'l | First | Add'l | SOMEC | SOMAN | SOMAN | SOMAN | SOMAN | SOMAN |
| | | Virtual Collocation - 4-Fiber Cross Connects | | | UDL12, UDLO3, U1T48, U1T12, U1T03, ULDO3, ULD12, ULD48, UDF | CNC4F | 7.59 | 51.29 | 39.87 | 19.41 | 16.49 | | | | | | |
| | | Virtual collocation - Special Access & UNE, cross-connect per DS1 | | | USL,ULC, ULR, UXTD1, UNC1X, ULDD1, U1TD1, USLEL, UNLD1, UEPEX, UEPDX | CNC1X | 1.48 | 44.23 | 31.98 | 12.81 | 11.57 | | | | | | |
| | | Virtual collocation - Special Access & UNE, cross-connect per DS3 | | | USL,UE3, U1TD3, UXTS1, UXTD3, UNC3X, UNCSX, ULDD3, U1TS1, ULDS1, UDLSX, UNLD3 | CND3X | 18.89 | 41.93 | 30.51 | 14.75 | 11.83 | | | | | | |
| | | Virtual Collocation - Co-Carrier Cross Connects - Fiber Cable Support Structure, per linear foot | | | AMTFS | VE1CB | 0.003 | | | | | | | | | | |
| | | Virtual Collocation - Co-Carrier Cross Connects - Copper/Coax Cable Support Structure, per linear ft | | | AMTFS | VE1CD | 0.0045 | | | | | | | | | | |
| | | Virtual Collocation - Co-Carrier Cross Connects - Fiber Cable Support Structure,per cable | | | AMTFS | VE1CC | | 535.55 | | | | | | | | | |
| | | Virtual Collocation - Co-Carrier Cross Connects - Copper/Coax Cable Support Structure, per cable | | | AMTFS | VE1CE | | 535.55 | | | | | | | | | |
| | | Virtual Collocation Cable Records - per request | | | AMTFS | VE1BA | | 1,524.45 | 980.01 | 267.02 | | | | | | | |
| | | Virtual Collocation Cable Records - VG/DS0 Cable, per cable record | | | AMTFS | VE1BB | | 656.37 | | 379.70 | | | | | | | |
| | | Virtual Collocation Cable Records - VG/DS0 Cable, per each 100 pair | | | AMTFS | VE1BC | | 9.65 | | 11.84 | | | | | | | |
| | | Virtual Collocation Cable Records -DS1, per T1TIE | | | AMTFS | VE1BD | | 4.52 | | 5.54 | | | | | | | |
| | | Virtual Collocation Cable Records - DS3, per T3TIE | | | AMTFS | VE1BE | | 15.81 | | 19.39 | | | | | | | |
| | | Virtual Collocation Cable Records - Fiber Cable, per 99 fiber records | | | AMTFS | VE1BF | | 169.63 | | 154.85 | | | | | | | |
| | | Virtual collocation - Security Escort - Basic, per half hour | | | AMTFS | SPTBX | | 33.98 | 21.53 | | | | | | | | |
| | | Virtual collocation - Security Escort - Overtime, per half hour | | | AMTFS | SPTOX | | 44.26 | 27.81 | | | | | | | | |
| | | Virtual collocation - Security Escort - Premium, per half hour | | | AMTFS | SPTPX | | 54.54 | 34.09 | | | | | | | | |
| | | Virtual collocation - Maintenance in CO - Basic, per half hour | | | AMTFS | CTRLX | | 56.07 | 21.53 | | | | | | | | |
| | | Virtual collocation - Maintenance in CO - Overtime, per half hour | | | AMTFS | SPTOM | | 73.23 | 27.81 | | | | | | | | |
| | | Virtual collocation - Maintenance in CO - Premium per half hour | | | AMTFS | SPTPM | | 90.39 | 34.09 | | | | | | | | |
| | | Virtual Collocation - Request Resend of CFA Information, per CLLI | | | AMTFS | VE1QR | | 77.55 | | | | | | | | | |

## COLLOCATION - Louisiana

| CATEGORY | | RATE ELEMENTS | Interim | Zone | BCS | USOC | RATES ($) | | | | | Svc Order Submitted Elec per LSR | Svc Order Submitted Manually per LSR | Attachment: 4 Incremental Charge - Manual Svc Order vs. Electronic-1st | Attachment: 4 Incremental Charge - Manual Svc Order vs. Electronic-Add'l | Exhibit: B Incremental Charge - Manual Svc Order vs. Electronic-Disc 1st | Exhibit: B Incremental Charge - Manual Svc Order vs. Electronic-Disc Add'l |
|---|---|---|---|---|---|---|---|---|---|---|---|---|---|---|---|---|---|
| | | | | | | | Rec | Nonrecurring | | Nonrecurring Disconnect | | OSS Rates ($) | | | | | |
| | | | | | | | | First | Add'l | First | Add'l | SOMEC | SOMAN | SOMAN | SOMAN | SOMAN | SOMAN |
| PHYSICAL COLLOCATION | | | | | | | | | | | | | | | | | |
| | | Physical Collocation - Initial Application Fee | | | CLO | PE1BA | | 1,837.24 | | | | | | | | | |
| | | Physical Collocation - Subsequent Application Fee | | | CLO | PE1CA | | 1,533.41 | | | | | | | | | |
| | | Physical Collocation Administrative Only - Application Fee | | | CLO | PE1BL | | 741.97 | | | | | | | | | |
| | | Physical Collocation - Space Preparation - Firm Order Processing | | | CLO | PE1SJ | | 583.33 | | | | | | | | | |
| | | Physical Collocation - Space Preparation - C.O. Modification per square ft. | | | CLO | PE1SK | 2.31 | | | | | | | | | | |
| | | Physical Collocation - Space Preparation, Common Systems Modifications-Cageless, per square foot | | | CLO | PE1SL | 2.70 | | | | | | | | | | |
| | | Physical Collocation - Space Preparation - Common Systems Modifications-Caged, per cage | | | CLO | PE1SM | 91.60 | | | | | | | | | | |
| | | Physical Collocation - Cable Installation, Pricing, non-recurring charge, per Entrance Cable | | | CLO | PE1BD | | 841.54 | | | | | | | | | |
| | | Physical Collocation - Floor Space, per sq feet | | | CLO | PE1PJ | 5.30 | | | | | | | | | | |
| | | Physical Collocation - Cable Support Structure, per Entrance Cable | | | CLO | PE1PM | 18.31 | | | | | | | | | | |
| | | Physical Collocation - Power, -48V DC Power - per Fused Amp | I | | CLO | PE1PL | 8.32 | | | | | | | | | | |
| | | Physical Collocation - Power Reconfiguration Only, Application Fee | I | | CLO | PE1PR | | 398.76 | | | | | | | | | |
| | | Physical Collocation - Power, 120V AC Power, Single Phase, per Breaker Amp | | | CLO | PE1FB | 5.45 | | | | | | | | | | |
| | | Physical Collocation - Power, 240V AC Power, Single Phase, per Breaker Amp | | | CLO | PE1FD | 10.92 | | | | | | | | | | |
| | | Physical Collocation - Power, 120V AC Power, Three Phase, per Breaker Amp | | | CLO | PE1FE | 16.37 | | | | | | | | | | |
| | | Physical Collocation - Power, 277V AC Power, Three Phase, per Breaker Amp | | | CLO | PE1FG | 37.80 | | | | | | | | | | |
| | | Physical Collocation - 2-wire cross-connect, loop, provisioning | | | UEANL,UEQ, UNLDX, UNCNX, UEA, UCL, UAL, UHL, UDC, UDN, UNCVX | PE1P2 | 0.0318 | 11.94 | 11.46 | | | | | | | | | |
| | | Physical Collocation - 4-wire cross-connect, loop, provisioning | | | UEA, UHL, UNCVX, UNCDX, UCL, UDL | PE1P4 | 0.0636 | 12.04 | 11.53 | | | | | | | | | |
| | | Physical Collocation -DS1 Cross-Connect for Physical Collocation, provisioning | | | WDS1L,WDS1S, UXTD1, ULDD1, USLEL, UNLD1, UEPEX, UEPDX, USL, ULC, U1TD1, UNC1X | PE1P1 | 1.04 | 21.39 | 15.47 | | | | | | | | | |
| | | Physical Collocation - DS3 Cross-Connect, provisioning | | | UE3,U1TD3, UXTD3, UXTS1, UNC3X, UNCSX, ULDD3, U1TS1,ULDS1, UNLD3 | PE1P3 | 13.21 | 20.28 | 14.76 | | | | | | | | | |
| | | Physical Collocation - 2-Fiber Cross-Connect | | | CLO, ULDO3, ULD12, ULD48, U1TO3, U1T12, U1T48, UDLO3, UDL12, UDF | PE1F2 | 2.62 | 20.28 | 14.76 | | | | | | | | | |
| | | Physical Collocation - 4-Fiber Cross-Connect | | | ULDO3, ULD12, ULD48, U1TO3, U1T12, U1T48, UDLO3, UDL12, UDF | PE1F4 | 4.65 | 24.81 | 19.29 | | | | | | | | | |

| COLLOCATION - Louisiana | | | | | | | | | | | | | | Attachment: 4 | | Exhibit: B | |
|---|---|---|---|---|---|---|---|---|---|---|---|---|---|---|---|---|---|
| CATEGORY | | RATE ELEMENTS | Interim | Zone | BCS | USOC | RATES ($) | | | | | Svc Order Submitted Elec per LSR | Svc Order Submitted Manually per LSR | Incremental Charge - Manual Svc Order vs. Electronic-1st | Incremental Charge - Manual Svc Order vs. Electronic-Add'l | Incremental Charge - Manual Svc Order vs. Electronic-Disc 1st | Incremental Charge - Manual Svc Order vs. Electronic-Disc Add'l |
| | | | | | | | Rec | Nonrecurring | | Nonrecurring Disconnect | | OSS Rates ($) | | | | | |
| | | | | | | | | First | Add'l | First | Add'l | SOMEC | SOMAN | SOMAN | SOMAN | SOMAN | SOMAN |
| | | Physical Collocation - Space enclosure, welded wire, first 100 square feet | | | CLO | PE1BW | 184.50 | | | | | | | | | | |
| | | Physical Collocation - Space enclosure, welded wire, each additional 50 square feet | | | CLO | PE1CW | 18.10 | | | | | | | | | | |
| | | Physical Collocation - Security Access System - Security System per Central Office, per Sq. Ft. | | | CLO | PE1AY | 0.0224 | | | | | | | | | | |
| | | Physical Collocation -Security Access System - New Card Activation, per Card Activation (First), per State | | | CLO | PE1A1 | 0.0579 | 27.50 | | | | | | | | | |
| | | Physical Collocation-Security Access System-Administrative Change, existing Access Card, per Request, per State, per Card | | | CLO | PE1AA | | 7.74 | | | | | | | | | |
| | | Physical Collocation - Security Access System - Replace Lost or Stolen Card, per Card | | | CLO | PE1AR | | 22.64 | | | | | | | | | |
| | | Physical Collocation - Security Access - Initial Key, per Key | | | CLO | PE1AK | | 13.01 | | | | | | | | | |
| | | Physical Collocation - Security Access - Key, Replace Lost or Stolen Key, per Key | | | CLO | PE1AL | | 13.01 | | | | | | | | | |
| | | Physical Collocation - Space Availability Report, per Central Office Requested | | | CLO | PE1SR | | 1,044.07 | | | | | | | | | |
| | | Physical Collocation - CFA Information Resend Request, per premises, per request | | | CLO | PE1C9 | | 77.43 | | | | | | | | | |
| | | Recurring Collocation Cable Records - per request | | | CLO | PE1CU | 10.97 | | | | | | | | | | |
| | | Recurring Collocation Cable Records - VG/DS0 Cable, per cable record | | | CLO | PE1CE | 5.29 | | | | | | | | | | |
| | | Recurring Collocation Cable Records - VG/DS0 Cable, per each 100 pair | | | CLO | PE1CT | 0.08 | | | | | | | | | | |
| | | Recurring Collocation Cable Records - DS1, per T1TIE | | | CLO | PE1C2 | 0.04 | | | | | | | | | | |
| | | Recurring Collocation Cable Records - DS3, per T3TIE | | | CLO | PE1C4 | 0.13 | | | | | | | | | | |
| | | Recurring Collocation Cable Records - Fiber Cable, per 99 fiber records | | | CLO | PE1CG | 1.37 | | | | | | | | | | |
| | | Physical Collocation - Security Escort for Basic Time - normally scheduled work, per half hour | | | CLO | PE1BT | | 16.44 | 10.42 | | | | | | | | |
| | | Physical Collocation - Security Escort for Overtime - outside of normally scheduled working hours on a scheduled work day, per half hour | | | CLO | PE1OT | | 21.41 | 13.45 | | | | | | | | |
| | | Physical Collocation - Security Escort for Premium Time - outside of scheduled work day, per half hour | | | CLO | PE1PT | | 26.38 | 16.49 | | | | | | | | |
| | | Physical Collocation - Virtual to Physical Collocation Relocation, per Voice Grade Circuit | | | CLO | PE1BV | | 33.00 | | | | | | | | | |
| | | Physical Collocation - Virtual to Physical Collocation Relocation, per DSO Circuit | | | CLO | PE1BO | | 33.00 | | | | | | | | | |
| | | Physical Collocation - Virtual to Physical Collocation Relocation, per DS1 Circuit | | | CLO | PE1B1 | | 52.00 | | | | | | | | | |
| | | Physical Collocation - Virtual to Physical Collocation Relocation, per DS3 Circuit | | | CLO | PE1B3 | | 52.00 | | | | | | | | | |
| | | Physical Collocation - Virtual to Physical Collocation In-Place, Per Voice Grade Circuit | | | CLO | PE1BR | | 23.00 | | | | | | | | | |
| | | Physical Collocation Virtual to Physical Collocation In-Place, Per DSO Circuit | | | CLO | PE1BP | | 23.00 | | | | | | | | | |
| | | Physical Collocation - Virtual to Physical Collocation In-Place, Per DS1 Circuit | | | CLO | PE1BS | | 33.00 | | | | | | | | | |
| | | Physical Collocation - Virtual to Physical Collocation In-Place, per DS3 Circuit | | | CLO | PE1BE | | 37.00 | | | | | | | | | |
| | | Physical Collocation - Virtual to Physical Collocation In-Place/Relocation, space cable facilities assigned to Collocation Space, per 700 cable pairs or fraction thereof | | | CLO | PE1B7 | | 592.00 | | | | | | | | | |
| | | Physical Collocation - Co-Carrier Cross Connects/Direct Connect - Fiber Cable Support Structure, per linear ft. | | | CLO | PE1ES | 0.001 | | | | | | | | | | |
| | | Physical Collocation - Co-Carrier Cross Connect/Direct Connect - Copper/Coax Cable Support Structure, per lin. ft. | | | CLO | PE1DS | 0.0015 | | | | | | | | | | |

## COLLOCATION - Louisiana

| CATEGORY | | RATE ELEMENTS | Interim | Zone | BCS | USOC | RATES ($) | | | | Svc Order Submitted Elec per LSR | Svc Order Submitted Manually per LSR | Attachment: 4 Incremental Charge - Manual Svc Order vs. Electronic- 1st | Attachment: 4 Incremental Charge - Manual Svc Order vs. Electronic- Add'l | Exhibit: B Incremental Charge - Manual Svc Order vs. Electronic- Disc 1st | Exhibit: B Incremental Charge - Manual Svc Order vs. Electronic- Disc Add'l |
|---|---|---|---|---|---|---|---|---|---|---|---|---|---|---|---|---|
| | | | | | | | Rec | Nonrecurring | | Nonrecurring Disconnect | | | OSS Rates ($) | | | |
| | | | | | | | | First | Add'l | First | Add'l | SOMEC | SOMAN | SOMAN | SOMAN | SOMAN | SOMAN |
| | | Physical Collocation - Co-Carrier Cross Connects/Direct Connect, Application Fee, per application | | | CLO | PE1DT | | 583.30 | | | | | | | | | |
| | | Physical Collocation - Copper Entrance Cable per Cable (CO manhole to vault splice) | | | CLO | PE1EA | | 1,358.81 | 42.653 | | | | | | | | |
| | | Physical Collocation - Copper Entrance Cable Installation, per 100 Pairs | | | CLO | PE1EB | | 18.074 | | | | | | | | | |
| | | Physical Collocation - Fiber Entrance Cable per Cable (CO manhole to vault splice) | | | CLO | PE1EC | | 1,163.609 | 42.653 | | | | | | | | |
| | | Physical Collocation - Fiber Entrance Cable Installation, per Fiber | | | CLO | PE1ED | | 7.23 | | | | | | | | | |
| | | Physical Collocation - Application Cost, Simple Augment | | | CLO | PE1KS | | 596.35 | | 1.22 | | | | | | | |
| | | Physical Collocation - Application Cost, Minor Augment | | | CLO | PE1KM | | 836.18 | | 1.22 | | | | | | | |
| | | Physical Collocation - Application Cost, Intermediate Augment | | | CLO | PE1K1 | | 1,061.00 | | 1.22 | | | | | | | |
| | | Physical Collocation - Co-Carrier Cross Connect/Direct Connect - Fiber Cable Support Structure, per cable | I | | CLO | PE1DU | | 534.79 | | | | | | | | | |
| | | Physical Collocation - Co-Carrier Cross Connect/Direct Connect - Copper/Coax Cable Support Structure, per cable | I | | CLO | PE1DV | | 534.79 | | | | | | | | | |
| ADJACENT COLLOCATION | | | | | | | | | | | | | | | | | |
| | | Adjacent Collocation - Space Charge per Sq. Ft. | | | CLOAC | PE1JA | 0.0552 | | | | | | | | | | |
| | | Adjacent Collocation - Electrical Facility Charge per Linear Ft. | | | CLOAC | PE1JC | 5.61 | | | | | | | | | | |
| | | Adjacent Collocation - 2-Wire Cross-Connects | | | UEA,UHL,UDL,UCL | PE1P2 | 0.0245 | 11.94 | 11.46 | | | | | | | | |
| | | Adjacent Collocation - 4-Wire Cross-Connects | | | UEA,UHL,UDL,UCL | PE1P4 | 0.0491 | 12.04 | 11.53 | | | | | | | | |
| | | Adjacent Collocation - DS1 Cross-Connects | | | UEA,UHL,UDL,UCL | PE1P1 | 0.9605 | 21.39 | 15.47 | | | | | | | | |
| | | Adjacent Collocation - DS3 Cross-Connects | | | UEA,UHL,UDL,UCL | PE1P3 | 13.01 | 20.28 | 14.76 | | | | | | | | |
| | | Adjacent Collocation - 2-Fiber Cross-Connect | | | CLOAC | PE1F2 | 2.20 | 20.28 | 14.76 | | | | | | | | |
| | | Adjacent Collocation - 4-Fiber Cross-Connect | | | CLOAC | PE1F4 | 4.21 | 24.81 | 19.29 | | | | | | | | |
| | | Adjacent Collocation - Application Fee | | | CLOAC | PE1JB | | 1,543.20 | | | | | | | | | |
| | | Adjacent Collocation - 120V, Single Phase Standby Power Rate per AC Breaker Amp | | | CLOAC | PE1FB | 5.45 | | | | | | | | | | |
| | | Adjacent Collocation - 240V, Single Phase Standby Power Rate per AC Breaker Amp | | | CLOAC | PE1FD | 10.92 | | | | | | | | | | |
| | | Adjacent Collocation - 120V, Three Phase Standby Power Rate per AC Breaker Amp | | | CLOAC | PE1FE | 16.37 | | | | | | | | | | |
| | | Adjacent Collocation - 277V, Three Phase Standby Power Rate per AC Breaker Amp | | | CLOAC | PE1FG | 37.80 | | | | | | | | | | |
| VIRTUAL COLLOCATION | | | | | | | | | | | | | | | | | |
| | | Virtual Collocation - Application Fee | | | AMTFS | EAF | | 1,770.40 | | | | | | | | | |
| | | Virtual Collocation Administrative Only - Application Fee | I | | AMTFS | VE1AF | | 741.97 | | | | | | | | | |
| | | Virtual Collocation - Cable Installation Cost, per cable | | | AMTFS | ESPCX | | 841.54 | | | | | | | | | |
| | | Virtual Collocation - Floor Space, per sq. ft. | | | AMTFS | ESPVX | 3.20 | | | | | | | | | | |
| | | Virtual Collocation - Power, per fused amp | | | AMTFS | ESPAX | 8.32 | | | | | | | | | | |
| | | Virtual Collocation - Cable Support Structure, per entrance cable | | | AMTFS | ESPSX | 16.02 | | | | | | | | | | |
| | | Virtual Collocation - 2-wire Cross Connects (loop) | | | UEANL,UEA,UDN,UDC,UAL,UHL,UCL,UEQ, UNCVX, UNCDX, UNCNX | UEAC2 | 0.0296 | 11.94 | 11.46 | | | | | | | | |
| | | Virtual Collocation - 4-wire Cross Connects (loop) | | | UEA,UHL,UCL,UDL, UAL, UDN, UNCVX, UNCDX | UEAC4 | 0.0591 | 12.04 | 11.53 | | | | | | | | |
| | | Virtual Collocation - 2-Fiber Cross Connects | | | UDL12, UDLO3, U1T48, U1T12, U1T03, ULDO3, ULD12, ULD48, UDF | CNC2F | 2.65 | 20.29 | 14.76 | | | | | | | | |

| COLLOCATION - Louisiana | | | | | | | | | | | | | | Attachment: 4 | | Exhibit: B | |
|---|---|---|---|---|---|---|---|---|---|---|---|---|---|---|---|---|---|
| CATEGORY | | RATE ELEMENTS | Interim | Zone | BCS | USOC | RATES ($) | | | | | Svc Order Submitted Elec per LSR | Svc Order Submitted Manually per LSR | Incremental Charge - Manual Svc Order vs. Electronic-1st | Incremental Charge - Manual Svc Order vs. Electronic-Add'l | Incremental Charge - Manual Svc Order vs. Electronic-Disc 1st | Incremental Charge - Manual Svc Order vs. Electronic-Disc Add'l |
| | | | | | | | Rec | Nonrecurring | | Nonrecurring Disconnect | | OSS Rates ($) | | | | | |
| | | | | | | | | First | Add'l | First | Add'l | SOMEC | SOMAN | SOMAN | SOMAN | SOMAN | SOMAN |
| | | Virtual Collocation - 4-Fiber Cross Connects | | | UDL12, UDLO3, U1T48, U1T12, U1T03, ULDO3, ULD12, ULD48, UDF | CNC4F | 5.31 | 24.81 | 19.29 | | | | | | | | |
| | | Virtual collocation - Special Access & UNE, cross-connect per DS1 | | | USL,ULC, ULR, UXTD1, UNC1X, ULDD1, U1TD1, USLEL, UNLD1, UEPEX, UEPDX | CNC1X | 1.04 | 21.39 | 15.47 | | | | | | | | |
| | | Virtual collocation - Special Access & UNE, cross-connect per DS3 | | | USL,UE3, U1TD3, UXTS1, UXTD3, UNC3X, UNCSX, ULDD3, U1TS1, ULDS1, UDLSX, UNLD3 | CND3X | 13.21 | 20.28 | 14.76 | | | | | | | | |
| | | Virtual Collocation - Co-Carrier Cross Connects - Fiber Cable Support Structure, per linear foot | | | AMTFS | VE1CB | 0.0024 | | | | | | | | | | |
| | | Virtual Collocation - Co-Carrier Cross Connects - Copper/Coax Cable Support Structure, per linear ft | | | AMTFS | VE1CD | 0.0036 | | | | | | | | | | |
| | | Virtual Collocation - Co-Carrier Cross Connects - Fiber Cable Support Structure,per cable | | | AMTFS | VE1CC | | 534.79 | | | | | | | | | |
| | | Virtual Collocation - Co-Carrier Cross Connects - Copper/Coax Cable Support Structure, per cable | | | AMTFS | VE1CE | | 534.79 | | | | | | | | | |
| | | Virtual Collocation Cable Records - per request | | | AMTFS | VE1BA | 10.97 | | | | | | | | | | |
| | | Virtual Collocation Cable Records - VG/DS0 Cable, per cable record | | | AMTFS | VE1BB | 5.29 | | | | | | | | | | |
| | | Virtual Collocation Cable Records - VG/DS0 Cable, per each 100 pair | | | AMTFS | VE1BC | 0.08 | | | | | | | | | | |
| | | Virtual Collocation Cable Records - DS1, per T1TIE | | | AMTFS | VE1BD | 0.04 | | | | | | | | | | |
| | | Virtual Collocation Cable Records - DS3, per T3TIE | | | AMTFS | VE1BE | 0.13 | | | | | | | | | | |
| | | Virtual Collocation Cable Records - Fiber Cable, per 99 fiber records | | | AMTFS | VE1BF | 1.37 | | | | | | | | | | |
| | | Virtual collocation - Security Escort - Basic, per half hour | | | AMTFS | SPTBX | | 16.44 | 10.42 | | | | | | | | |
| | | Virtual collocation - Security Escort - Overtime, per half hour | | | AMTFS | SPTOX | | 21.41 | 13.45 | | | | | | | | |
| | | Virtual collocation - Security Escort - Premium, per half hour | | | AMTFS | SPTPX | | 26.38 | 16.49 | | | | | | | | |
| | | Virtual collocation - Maintenance in CO - Basic, per half hour | | | AMTFS | CTRLX | | 27.12 | 10.42 | | | | | | | | |
| | | Virtual collocation - Maintenance in CO - Overtime, per half hour | | | AMTFS | SPTOM | | 35.42 | 13.45 | | | | | | | | |
| | | Virtual collocation - Maintenance in CO - Premium per half hour | | | AMTFS | SPTPM | | 43.72 | 16.49 | | | | | | | | |
| | | Virtual Collocation - Request Resend of CFA Information, per CLLI | | | AMTFS | VE1QR | | 77.43 | | | | | | | | | |

| COLLOCATION - Mississippi | | | | | | | | | | | | | Attachment: 4 | | Exhibit: B | |
|---|---|---|---|---|---|---|---|---|---|---|---|---|---|---|---|---|
| CATEGORY | | RATE ELEMENTS | Interim | Zone | BCS | USOC | RATES ($) | | | | | Svc Order Submitted Elec per LSR | Svc Order Submitted Manually per LSR | Incremental Charge - Manual Svc Order vs. Electronic-1st | Incremental Charge - Manual Svc Order vs. Electronic-Add'l | Incremental Charge - Manual Svc Order vs. Electronic-Disc 1st | Incremental Charge - Manual Svc Order vs. Electronic-Disc Add'l |
| | | | | | | | Rec | Nonrecurring | | Nonrecurring Disconnect | | OSS Rates ($) | | | | | |
| | | | | | | | | First | Add'l | First | Add'l | SOMEC | SOMAN | SOMAN | SOMAN | SOMAN | SOMAN |
| PHYSICAL COLLOCATION | | | | | | | | | | | | | | | | | |
| | | Physical Collocation - Initial Application Fee | | | CLO | PE1BA | | 1,890.38 | | | | | | | | | |
| | | Physical Collocation - Subsequent Application Fee | | | CLO | PE1CA | | 1,575.69 | | | | | | | | | |
| | | Physical Collocation Administrative Only - Application Fee | | | CLO | PE1BL | | 740.76 | | | | | | | | | |
| | | Physical Collocation - Space Preparation - Firm Order Processing | I | | CLO | PE1SJ | | 604.19 | | | | | | | | | |
| | | Physical Collocation - Space Preparation - C.O. Modification per square ft. | I | | CLO | PE1SK | 2.30 | | | | | | | | | | |
| | | Physical Collocation - Space Preparation, Common Systems Modifications-Cageless, per square foot | I | | CLO | PE1SL | 2.52 | | | | | | | | | | |
| | | Physical Collocation - Space Preparation - Common Systems Modifications-Caged, per cage | I | | CLO | PE1SM | 85.67 | | | | | | | | | | |
| | | Physical Collocation - Cable Installation, Pricing, non-recurring charge, per Entrance Cable | | | CLO | PE1BD | | 926.27 | | 22.62 | | | | | | | |
| | | Physical Collocation - Floor Space, per sq feet | | | CLO | PE1PJ | 5.74 | | | | | | | | | | |
| | | Physical Collocation - Cable Support Structure, per Entrance Cable | | | CLO | PE1PM | 17.42 | | | | | | | | | | |
| | | Physical Collocation - Power, -48V DC Power - per Fused Amp | I | | CLO | PE1PL | 7.33 | | | | | | | | | | |
| | | Physical Collocation - Power Reconfiguration Only, Application Fee | I | | CLO | PE1PR | | 398.76 | | | | | | | | | |
| | | Physical Collocation - Power, 120V AC Power, Single Phase, per Breaker Amp | I | | CLO | PE1FB | 5.29 | | | | | | | | | | |
| | | Physical Collocation - Power, 240V AC Power, Single Phase, per Breaker Amp | I | | CLO | PE1FD | 10.58 | | | | | | | | | | |
| | | Physical Collocation - Power, 120V AC Power, Three Phase, per Breaker Amp | I | | CLO | PE1FE | 15.87 | | | | | | | | | | |
| | | Physical Collocation - Power, 277V AC Power, Three Phase, per Breaker Amp | I | | CLO | PE1FG | 36.65 | | | | | | | | | | |
| | | Physical Collocation - 2-wire cross-connect, loop, provisioning | | | UEANL,UEQ, UNLDX, UNCNX, UEA, UCL, UAL, UHL, UDC, UDN, UNCVX | PE1P2 | 0.0288 | 12.37 | 11.87 | 6.04 | 5.45 | | | | | | |
| | | Physical Collocation - 4-wire cross-connect, loop, provisioning | | | UEA, UHL, UNCVX, UNCDX, UCL, UDL | PE1P4 | 0.0576 | 12.47 | 11.94 | 6.59 | 5.91 | | | | | | |
| | | Physical Collocation -DS1 Cross-Connect for Physical Collocation, provisioning | | | WDS1L,WDS1S, UXTD1, ULDD1, USLEL, UNLD1, UEPEX, UEPDX, USL, ULC, U1TD1, UNC1X | PE1P1 | 1.14 | 22.16 | 16.02 | 6.60 | 5.97 | | | | | | |
| | | Physical Collocation - DS3 Cross-Connect, provisioning | | | UE3,U1TD3, UXTD3, UXTS1, UNC3X, UNCSX, ULDD3, U1TS1,ULDS1, UNLD3 | PE1P3 | 14.49 | 21.01 | 15.29 | 7.61 | 6.10 | | | | | | |
| | | Physical Collocation - 2-Fiber Cross-Connect | | | CLO, ULDO3, ULD12, ULD48, U1TO3, U1T12, U1T48, UDLO3, UDL12, UDF | PE1F2 | 2.87 | 21.01 | 15.29 | 7.61 | 6.10 | | | | | | |
| | | Physical Collocation - 4-Fiber Cross-Connect | | | ULDO3, ULD12, ULD48, U1TO3, U1T12, U1T48, UDLO3, UDL12, UDF | PE1F4 | 5.10 | 25.70 | 19.97 | 10.01 | 8.50 | | | | | | |

| COLLOCATION - Mississippi | | | | | | | | | | | | | | Attachment: 4 | | Exhibit: B | |
|---|---|---|---|---|---|---|---|---|---|---|---|---|---|---|---|---|---|
| CATEGORY | | RATE ELEMENTS | Interim | Zone | BCS | USOC | RATES ($) | | | | | Svc Order Submitted Elec per LSR | Svc Order Submitted Manually per LSR | Incremental Charge - Manual Svc Order vs. Electronic-1st | Incremental Charge - Manual Svc Order vs. Electronic-Add'l | Incremental Charge - Manual Svc Order vs. Electronic-Disc 1st | Incremental Charge - Manual Svc Order vs. Electronic-Disc Add'l |
| | | | | | | | Rec | Nonrecurring | | Nonrecurring Disconnect | | OSS Rates ($) | | | | | |
| | | | | | | | | First | Add'l | First | Add'l | SOMEC | SOMAN | SOMAN | SOMAN | SOMAN | SOMAN |
| | | Physical Collocation - Space enclosure, welded wire, first 100 square feet | | | CLO | PE1BW | 183.20 | | | | | | | | | | |
| | | Physical Collocation - Space enclosure, welded wire, each additional 50 square feet | | | CLO | PE1CW | 17.97 | | | | | | | | | | |
| | | Physical Collocation - Security Access System, Security System, per Central Office | I | | CLO | PE1AX | 75.23 | | | | | | | | | | |
| | | Physical Collocation -Security Access System - New Card Activation, per Card Activation (First), per State | I | | CLO | PE1A1 | 0.0576 | 27.95 | | | | | | | | | |
| | | Physical Collocation-Security Access System-Administrative Change, existing Access Card, per Request, per State, per Card | I | | CLO | PE1AA | | 7.84 | | | | | | | | | |
| | | Physical Collocation - Security Access System - Replace Lost or Stolen Card, per Card | | | CLO | PE1AR | | 22.91 | | | | | | | | | |
| | | Physical Collocation - Security Access - Initial Key, per Key | | | CLO | PE1AK | | 13.17 | | | | | | | | | |
| | | Physical Collocation - Security Access - Key, Replace Lost or Stolen Key, per Key | | | CLO | PE1AL | | 13.17 | | | | | | | | | |
| | | Physical Collocation - Space Availability Report, per Central Office Requested | I | | CLO | PE1SR | | 1,081.40 | | | | | | | | | |
| | | Physical Collocation - CFA Information Resend Request, per premises, per request | | | CLO | PE1C9 | | 77.41 | | | | | | | | | |
| | | Physical Collocation - Cable Records, per request | | | CLO | PE1CR | | 763.69 | 490.94 | 133.77 | | | | | | | |
| | | Physical Collocation, Cable Records, VG/DS0 Cable, per cable record (maximum 3600 records) | | | CLO | PE1CD | | 328.81 | | 190.22 | | | | | | | |
| | | Physical Collocation, Cable Records, VG/DS0 Cable, per each 100 pair | | | CLO | PE1CO | | 4.84 | | 5.93 | | | | | | | |
| | | Physical Collocation, Cable Records, DS1, per T1 TIE | | | CLO | PE1C1 | | 2.27 | | 2.78 | | | | | | | |
| | | Physical Collocation, Cable Records, DS3, per T3 TIE | | | CLO | PE1C3 | | 7.92 | | 9.72 | | | | | | | |
| | | Physical Collocation - Cable Records, Fiber Cable, per cable record (maximum 99 records) | | | CLO | PE1CB | | 84.98 | | 77.58 | | | | | | | |
| | | Physical Collocation - Security Escort for Basic Time - normally scheduled work, per half hour | | | CLO | PE1BT | | 17.02 | 10.79 | | | | | | | | |
| | | Physical Collocation - Security Escort for Overtime - outside of normally scheduled working hours on a scheduled work day, per half hour | | | CLO | PE1OT | | 22.17 | 13.94 | | | | | | | | |
| | | Physical Collocation - Security Escort for Premium Time - outside of scheduled work day, per half hour | | | CLO | PE1PT | | 27.32 | 17.08 | | | | | | | | |
| | | Physical Collocation - Virtual to Physical Collocation Relocation, per Voice Grade Circuit | | | CLO | PE1BV | | 33.00 | | | | | | | | | |
| | | Physical Collocation - Virtual to Physical Collocation Relocation, per DSO Circuit | | | CLO | PE1BO | | 33.00 | | | | | | | | | |
| | | Physical Collocation - Virtual to Physical Collocation Relocation, per DS1 Circuit | | | CLO | PE1B1 | | 52.00 | | | | | | | | | |
| | | Physical Collocation - Virtual to Physical Collocation Relocation, per DS3 Circuit | | | CLO | PE1B3 | | 52.00 | | | | | | | | | |
| | | Physical Collocation - Virtual to Physical Collocation In-Place, Per Voice Grade Circuit | | | CLO | PE1BR | | 23.00 | | | | | | | | | |
| | | Physical Collocation Virtual to Physical Collocation In-Place, Per DSO Circuit | | | CLO | PE1BP | | 23.00 | | | | | | | | | |
| | | Physical Collocation - Virtual to Physical Collocation In-Place, Per DS1 Circuit | | | CLO | PE1BS | | 33.00 | | | | | | | | | |
| | | Physical Collocation - Virtual to Physical Collocation In-Place, per DS3 Circuit | | | CLO | PE1BE | | 37.00 | | | | | | | | | |
| | | Physical Collocation - Virtual to Physical Collocation In-Place/Relocation, space cable facilities assigned to Collocation Space, per 700 cable pairs or fraction thereof | | | CLO | PE1B7 | | 592.00 | | | | | | | | | |
| | | Physical Collocation - Co-Carrier Cross Connects/Direct Connect - Fiber Cable Support Structure, per linear ft. | | | CLO | PE1ES | 0.001 | | | | | | | | | | |
| | | Physical Collocation - Co-Carrier Cross Connect/Direct Connect - Copper/Coax Cable Support Structure, per lin. ft. | | | CLO | PE1DS | 0.0015 | | | | | | | | | | |

| COLLOCATION - Mississippi | | | | | | | | | | | | | Attachment: 4 | | Exhibit: B | |
|---|---|---|---|---|---|---|---|---|---|---|---|---|---|---|---|---|
| CATEGORY | | RATE ELEMENTS | Interim | Zone | BCS | USOC | RATES ($) | | | | | Svc Order Submitted Elec per LSR | Svc Order Submitted Manually per LSR | Incremental Charge - Manual Svc Order vs. Electronic-1st | Incremental Charge - Manual Svc Order vs. Electronic-Add'l | Incremental Charge - Manual Svc Order vs. Electronic-Disc 1st | Incremental Charge - Manual Svc Order vs. Electronic-Disc Add'l |
| | | | | | | | Rec | Nonrecurring | | Nonrecurring Disconnect | | OSS Rates ($) | | | | | |
| | | | | | | | | First | Add'l | First | Add'l | SOMEC | SOMAN | SOMAN | SOMAN | SOMAN | SOMAN |
| | | Physical Collocation - Co-Carrier Cross Connects/Direct Connect, Application Fee, per application | | | CLO | PE1DT | | 583.13 | | | | | | | | | |
| | | Physical Collocation - Copper Entrance Cable per Cable (CO manhole to vault splice) | | | CLO | PE1EA | | 1,265.629 | 42.641 | | | | | | | | |
| | | Physical Collocation - Copper Entrance Cable Installation, per 100 Pairs | | | CLO | PE1EB | | 18.069 | | | | | | | | | |
| | | Physical Collocation - Fiber Entrance Cable per Cable (CO manhole to vault splice) | | | CLO | PE1EC | | 1,070.484 | 42.641 | | | | | | | | |
| | | Physical Collocation - Fiber Entrance Cable Installation, per Fiber | | | CLO | PE1ED | | 7.228 | | | | | | | | | |
| | | Physical Collocation - Application Cost, Simple Augment | | | CLO | PE1KS | | 597.34 | | 1.22 | | | | | | | |
| | | Physical Collocation - Application Cost, Minor Augment | | | CLO | PE1KM | | 837.57 | | 1.22 | | | | | | | |
| | | Physical Collocation - Application Cost, Intermediate Augment | | | CLO | PE1K1 | | 1,063.00 | | 1.22 | | | | | | | |
| | | Physical Collocation - Co-Carrier Cross Connect/Direct Connect - Fiber Cable Support Structure, per cable | I | | CLO | PE1DU | | 534.65 | | | | | | | | | |
| | | Physical Collocation - Co-Carrier Cross Connect/Direct Connect - Copper/Coax Cable Support Structure, per cable | I | | CLO | PE1DV | | 534.65 | | | | | | | | | |
| ADJACENT COLLOCATION | | | | | | | | | | | | | | | | | |
| | | Adjacent Collocation - Space Charge per Sq. Ft. | | | CLOAC | PE1JA | 0.0678 | | | | | | | | | | |
| | | Adjacent Collocation - Electrical Facility Charge per Linear Ft. | | | CLOAC | PE1JC | 4.68 | | | | | | | | | | |
| | | Adjacent Collocation - 2-Wire Cross-Connects | | | UEA,UHL,UDL,UCL | PE1P2 | 0.0223 | 12.37 | 11.87 | 6.04 | 5.45 | | | | | | |
| | | Adjacent Collocation - 4-Wire Cross-Connects | | | UEA,UHL,UDL,UCL | PE1P4 | 0.0446 | 12.47 | 11.94 | 6.59 | 5.91 | | | | | | |
| | | Adjacent Collocation - DS1 Cross-Connects | | | UEA,UHL,UDL,UCL | PE1P1 | 1.05 | 22.16 | 16.02 | 6.60 | 5.97 | | | | | | |
| | | Adjacent Collocation - DS3 Cross-Connects | | | UEA,UHL,UDL,UCL | PE1P3 | 14.27 | 21.01 | 15.29 | 7.61 | 6.10 | | | | | | |
| | | Adjacent Collocation - 2-Fiber Cross-Connect | | | CLOAC | PE1F2 | 2.42 | 21.01 | 15.29 | 7.61 | 6.10 | | | | | | |
| | | Adjacent Collocation - 4-Fiber Cross-Connect | | | CLOAC | PE1F4 | 4.62 | 25.70 | 19.97 | 10.01 | 8.50 | | | | | | |
| | | Adjacent Collocation - Application Fee | | | CLOAC | PE1JB | | 1,585.83 | | | | | | | | | |
| | | Adjacent Collocation - 120V, Single Phase Standby Power Rate per AC Breaker Amp | | | CLOAC | PE1FB | 5.29 | | | | | | | | | | |
| | | Adjacent Collocation - 240V, Single Phase Standby Power Rate per AC Breaker Amp | | | CLOAC | PE1FD | 10.58 | | | | | | | | | | |
| | | Adjacent Collocation - 120V, Three Phase Standby Power Rate per AC Breaker Amp | | | CLOAC | PE1FE | 15.87 | | | | | | | | | | |
| | | Adjacent Collocation - 277V, Three Phase Standby Power Rate per AC Breaker Amp | | | CLOAC | PE1FG | 36.65 | | | | | | | | | | |
| VIRTUAL COLLOCATION | | | | | | | | | | | | | | | | | |
| | | Virtual Collocation - Application Fee | | | AMTFS | EAF | | 1,212.25 | | 0.51 | | | | | | | |
| | | Virtual Collocation Administrative Only - Application Fee | I | | AMTFS | VE1AF | | 740.76 | | | | | | | | | |
| | | Virtual Collocation - Cable Installation Cost, per cable | | | AMTFS | ESPCX | | 926.27 | | 22.62 | | | | | | | |
| | | Virtual Collocation - Floor Space, per sq. ft. | | | AMTFS | ESPVX | 5.74 | | | | | | | | | | |
| | | Virtual Collocation - Power, per fused amp | | | AMTFS | ESPAX | 7.33 | | | | | | | | | | |
| | | Virtual Collocation - Cable Support Structure, per entrance cable | | | AMTFS | ESPSX | 15.24 | | | | | | | | | | |
| | | Virtual Collocation - 2-wire Cross Connects (loop) | | | UEANL,UEA,UDN,UDC,UAL,UHL,UCL,UEQ, UNCVX, UNCDX, UNCNX | UEAC2 | 0.0268 | 12.37 | 11.87 | 6.04 | 5.45 | | | | | | |
| | | Virtual Collocation - 4-wire Cross Connects (loop) | | | UEA,UHL,UCL,UDL, UAL, UDN, UNCVX, UNCDX | UEAC4 | 0.0536 | 12.47 | 11.94 | 6.59 | 5.91 | | | | | | |
| | | Virtual Collocation - 2-Fiber Cross Connects | | | UDL12, UDLO3, U1T48, U1T12, U1T03, ULDO3, ULD12, ULD48, UDF | CNC2F | 2.91 | 21.01 | 15.29 | 7.61 | 6.10 | | | | | | |

| COLLOCATION - Mississippi | | | | | | | | | | | | | | Attachment: 4 | | Exhibit: B | |
|---|---|---|---|---|---|---|---|---|---|---|---|---|---|---|---|---|---|
| CATEGORY | | RATE ELEMENTS | Interim | Zone | BCS | USOC | RATES ($) | | | | | Svc Order Submitted Elec per LSR | Svc Order Submitted Manually per LSR | Incremental Charge - Manual Svc Order vs. Electronic-1st | Incremental Charge - Manual Svc Order vs. Electronic-Add'l | Incremental Charge - Manual Svc Order vs. Electronic-Disc 1st | Incremental Charge - Manual Svc Order vs. Electronic-Disc Add'l |
| | | | | | | | Rec | Nonrecurring | | Nonrecurring Disconnect | | OSS Rates ($) | | | | | |
| | | | | | | | | First | Add'l | First | Add'l | SOMEC | SOMAN | SOMAN | SOMAN | SOMAN | SOMAN |
| | | Virtual Collocation - 4-Fiber Cross Connects | | | UDL12, UDLO3, U1T48, U1T12, U1T03, ULDO3, ULD12, ULD48, UDF | CNC4F | 5.82 | 25.70 | 19.97 | 10.01 | 8.50 | | | | | | |
| | | Virtual Collocation - Special Access & UNE, cross-connect per DS1 | | | USL,ULC, ULR, UXTD1, UNC1X, ULDD1, U1TD1, USLEL, UNLD1, UEPEX, UEPDX | CNC1X | 1.14 | 22.16 | 16.02 | 6.60 | 5.97 | | | | | | |
| | | Virtual collocation - Special Access & UNE, cross-connect per DS3 | | | USL,UE3, U1TD3, UXTS1, UXTD3, UNC3X, UNCSX, ULDD3, U1TS1, ULDS1, UDLSX, UNLD3 | CND3X | 14.49 | 21.01 | 15.29 | 7.61 | 6.10 | | | | | | |
| | | Virtual Collocation - Co-Carrier Cross Connects - Fiber Cable Support Structure, per linear foot | | | AMTFS | VE1CB | 0.0025 | | | | | | | | | | |
| | | Virtual Collocation - Co-Carrier Cross Connects - Copper/Coax Cable Support Structure, per linear ft | | | AMTFS | VE1CD | 0.0037 | | | | | | | | | | |
| | | Virtual Collocation - Co-Carrier Cross Connects - Fiber Cable Support Structure,per cable | | | AMTFS | VE1CC | | 534.65 | | | | | | | | | |
| | | Virtual Collocation - Co-Carrier Cross Connects - Copper/Coax Cable Support Structure, per cable | | | AMTFS | VE1CE | | 534.65 | | | | | | | | | |
| | | Virtual Collocation Cable Records - per request | | | AMTFS | VE1BA | | 763.69 | 490.94 | 133.77 | | | | | | | |
| | | Virtual Collocation Cable Records - VG/DS0 Cable, per cable record | | | AMTFS | VE1BB | | 328.81 | | 190.22 | | | | | | | |
| | | Virtual Collocation Cable Records - VG/DS0 Cable, per each 100 pair | | | AMTFS | VE1BC | | 4.84 | | 5.93 | | | | | | | |
| | | Virtual Collocation Cable Records - DS1, per T1TIE | | | AMTFS | VE1BD | | 2.27 | | 2.78 | | | | | | | |
| | | Virtual Collocation Cable Records - DS3, per T3TIE | | | AMTFS | VE1BE | | 7.92 | | 9.72 | | | | | | | |
| | | Virtual Collocation Cable Records - Fiber Cable, per 99 fiber records | | | AMTFS | VE1BF | | 84.98 | | 77.58 | | | | | | | |
| | | Virtual collocation - Security Escort - Basic, per half hour | | | AMTFS | SPTBX | | 17.02 | 10.79 | | | | | | | | |
| | | Virtual collocation - Security Escort - Overtime, per half hour | | | AMTFS | SPTOX | | 22.17 | 13.94 | | | | | | | | |
| | | Virtual collocation - Security Escort - Premium, per half hour | | | AMTFS | SPTPX | | 27.32 | 17.08 | | | | | | | | |
| | | Virtual collocation - Maintenance in CO - Basic, per half hour | | | AMTFS | CTRLX | | 28.09 | 10.79 | | | | | | | | |
| | | Virtual collocation - Maintenance in CO - Overtime, per half hour | | | AMTFS | SPTOM | | 36.69 | 13.94 | | | | | | | | |
| | | Virtual collocation - Maintenance in CO - Premium per half hour | | | AMTFS | SPTPM | | 45.28 | 17.08 | | | | | | | | |
| | | Virtual Collocation - Request Resend of CFA Information, per CLLI | | | AMTFS | VE1QR | | 77.41 | | | | | | | | | |

CCCS 592 of 1253

| COLLOCATION - North Carolina | | | | | | | | | | | | | | Attachment: 4 | | Exhibit: B | |
|---|---|---|---|---|---|---|---|---|---|---|---|---|---|---|---|---|---|
| CATEGORY | | RATE ELEMENTS | Interim | Zone | BCS | USOC | RATES ($) | | | | | Svc Order Submitted Elec per LSR | Svc Order Submitted Manually per LSR | Incremental Charge - Manual Svc Order vs. Electronic-1st | Incremental Charge - Manual Svc Order vs. Electronic-Add'l | Incremental Charge - Manual Svc Order vs. Electronic-Disc 1st | Incremental Charge - Manual Svc Order vs. Electronic-Disc Add'l |
| | | | | | | | Rec | Nonrecurring | | Nonrecurring Disconnect | | OSS Rates ($) | | | | | |
| | | | | | | | | First | Add'l | First | Add'l | SOMEC | SOMAN | SOMAN | SOMAN | SOMAN | SOMAN |
| PHYSICAL COLLOCATION | | | | | | | | | | | | | | | | | |
| | | Physical Collocation - Initial Application Fee | I | | CLO | PE1BA | | 2,322.00 | | | | | | | | | |
| | | Physical Collocation - Subsequent Application Fee | | | CLO | PE1CA | | 2,311.00 | | | | | | | | | |
| | | Physical Collocation Administrative Only - Application Fee | | | CLO | PE1BL | | 741.44 | | | | | | | | | |
| | | Physical Collocation - Space Preparation - Firm Order Processing | | | CLO | PE1SJ | | 1,196.00 | | | | | | | | | |
| | | Physical Collocation - Space Preparation - C.O. Modification per square ft. | I | | CLO | PE1SK | 2.42 | | | | | | | | | | |
| | | Physical Collocation - Space Preparation, Common Systems Modifications-Cageless, per square foot | I | | CLO | PE1SL | 2.88 | | | | | | | | | | |
| | | Physical Collocation - Space Preparation - Common Systems Modifications-Caged, per cage | I | | CLO | PE1SM | 97.98 | | | | | | | | | | |
| | | Space Preparation Fees - Power Per Nominal -48V Dc Amp | I | | CLO | PE1FH | 5.76 | | | | | | | | | | |
| | | Physical Collocation - Cable Installation, Pricing, non-recurring charge, per Entrance Cable | I | | CLO | PE1BD | | 1,701.00 | | | | | | | | | |
| | | Physical Collocation - Floor Space, per sq feet | I | | CLO | PE1PJ | 2.30 | | | | | | | | | | |
| | | Physical Collocation - Cable Support Structure, per Entrance Cable | I | | CLO | PE1PM | 20.57 | | | | | | | | | | |
| | | Physical Collocation - Power, -48V DC Power - per Fused Amp | I | | CLO | PE1PL | 7.65 | | | | | | | | | | |
| | | Physical Collocation - Power Reconfiguration Only, Application Fee | I | | CLO | PE1PR | | 399.13 | | | | | | | | | |
| | | Physical Collocation - Power, 120V AC Power, Single Phase, per Breaker Amp | I | | CLO | PE1FB | 5.50 | | | | | | | | | | |
| | | Physical Collocation - Power, 240V AC Power, Single Phase, per Breaker Amp | I | | CLO | PE1FD | 11.01 | | | | | | | | | | |
| | | Physical Collocation - Power, 120V AC Power, Three Phase, per Breaker Amp | I | | CLO | PE1FE | 16.51 | | | | | | | | | | |
| | | Physical Collocation - Power, 277V AC Power, Three Phase, per Breaker Amp | I | | CLO | PE1FG | 38.12 | | | | | | | | | | |
| | | Physical Collocation - 2-wire cross-connect, loop, provisioning | I | | UEANL,UEQ, UNLDX, UNCNX, UEA, UCL, UAL, UHL, UDC, UDN, UNCVX | PE1P2 | 0.0309 | 33.53 | 31.65 | | | | | | | | |
| | | Physical Collocation - 4-wire cross-connect, loop, provisioning | I | | UEA, UHL, UNCVX, UNCDX, UCL, UDL | PE1P4 | 0.0618 | 33.67 | 31.70 | | | | | | | | |
| | | Physical Collocation -DS1 Cross-Connect for Physical Collocation, provisioning | I | | WDS1L,WDS1S, UXTD1, ULDD1, USLEL, UNLD1, UEPEX, UEPDX, USL, ULC, U1TD1, UNC1X | PE1P1 | 1.38 | 52.87 | 39.86 | | | | | | | | |
| | | Physical Collocation - DS3 Cross-Connect, provisioning | I | | UE3,U1TD3, UXTD3, UXTS1, UNC3X, UNCSX, ULDD3, U1TS1,ULDS1, UNLD3 | PE1P3 | 17.62 | 51.97 | 38.59 | | | | | | | | |
| | | Physical Collocation - 2-Fiber Cross-Connect | I | | CLO, ULDO3, ULD12, ULD48, U1TO3, U1T12, U1T48, UDLO3, UDL12, UDF | PE1F2 | 3.50 | 51.97 | 38.59 | | | | | | | | |

CCCS 593 of 1253

| COLLOCATION - North Carolina | | | | | | | | | | | | | Attachment: 4 | | Exhibit: B | |
|---|---|---|---|---|---|---|---|---|---|---|---|---|---|---|---|---|
| CATEGORY | | RATE ELEMENTS | Interim | Zone | BCS | USOC | RATES ($) | | | | | Svc Order Submitted Elec per LSR | Svc Order Submitted Manually per LSR | Incremental Charge - Manual Svc Order vs. Electronic-1st | Incremental Charge - Manual Svc Order vs. Electronic-Add'l | Incremental Charge - Manual Svc Order vs. Electronic-Disc 1st | Incremental Charge - Manual Svc Order vs. Electronic-Disc Add'l |
| | | | | | | | Rec | Nonrecurring | | Nonrecurring Disconnect | | OSS Rates ($) | | | | | |
| | | | | | | | | First | Add'l | First | Add'l | SOMEC | SOMAN | SOMAN | SOMAN | SOMAN | SOMAN |
| | | Physical Collocation - 4-Fiber Cross-Connect | I | | ULDO3, ULD12, ULD48, U1TO3, U1T12, U1T48, UDLO3, UDL12, UDF | PE1F4 | 6.20 | 64.53 | 51.15 | | | | | | | | |
| | | Physical Collocation - Space enclosure, welded wire, first 100 square feet | I | | CLO | PE1BW | | 559.81 | | | | | | | | | |
| | | Physical Collocation - Space enclosure, welded wire, each additional 50 square feet | I | | CLO | PE1CW | | 25.37 | | | | | | | | | |
| | | Physical Collocation - Security Access System - Security System per Central Office, per Sq. Ft. | | | CLO | PE1AY | 0.0135 | | | | | | | | | | |
| | | Physical Collocation - Security Access System, Security System, per Central Office | I | | CLO | PE1AX | 41.03 | | | | | | | | | | |
| | | Physical Collocation -Security Access System - New Card Activation, per Card Activation (First), per State | I | | CLO | PE1A1 | 0.062 | 15.00 | | | | | | | | | |
| | | Physical Collocation-Security Access System-Administrative Change, existing Access Card, per Request, per State, per Card | I | | CLO | PE1AA | | 15.51 | | | | | | | | | |
| | | Physical Collocation - Security Access System - Replace Lost or Stolen Card, per Card | | | CLO | PE1AR | | 15.00 | | | | | | | | | |
| | | Physical Collocation - Security Access - Initial Key, per Key | | | CLO | PE1AK | | 15.00 | | | | | | | | | |
| | | Physical Collocation - Security Access - Key, Replace Lost or Stolen Key, per Key | | | CLO | PE1AL | | 15.00 | | | | | | | | | |
| | | Physical Collocation - Space Availability Report, per Central Office Requested | I | | CLO | PE1SR | | 2,140.00 | 2,140.00 | | | | | | | | |
| | | Physical Collocation - CFA Information Resend Request, per premises, per request | | | CLO | PE1C9 | | 77.48 | | | | | | | | | |
| | | Physical Collocation - Cable Records, per request | | | CLO | PE1CR | | 1,707.00 | | | | | | | | | |
| | | Physical Collocation, Cable Records, VG/DS0 Cable, per cable record (maximum 3600 records) | | | CLO | PE1CD | | 923.08 | | | | | | | | | |
| | | Physical Collocation, Cable Records, VG/DS0 Cable, per each 100 pair | | | CLO | PE1CO | | 18.02 | | | | | | | | | |
| | | Physical Collocation, Cable Records, DS1, per T1 TIE | | | CLO | PE1C1 | | 8.43 | | | | | | | | | |
| | | Physical Collocation, Cable Records, DS3, per T3 TIE | | | CLO | PE1C3 | | 29.51 | | | | | | | | | |
| | | Physical Collocation - Cable Records, Fiber Cable, per cable record (maximum 99 records) | | | CLO | PE1CB | | 278.82 | | | | | | | | | |
| | | Physical Collocation - Security Escort for Basic Time - normally scheduled work, per half hour | | | CLO | PE1BT | | 33.68 | 21.34 | | | | | | | | |
| | | Physical Collocation - Security Escort for Overtime - outside of normally scheduled working hours on a scheduled work day, per half hour | | | CLO | PE1OT | | 43.87 | 27.57 | | | | | | | | |
| | | Physical Collocation - Security Escort for Premium Time - outside of scheduled work day, per half hour | | | CLO | PE1PT | | 54.06 | 33.80 | | | | | | | | |
| | | Physical Collocation - Virtual to Physical Collocation Relocation, per Voice Grade Circuit | | | CLO | PE1BV | | 33.00 | | | | | | | | | |
| | | Physical Collocation - Virtual to Physical Collocation Relocation, per DSO Circuit | | | CLO | PE1BO | | 33.00 | | | | | | | | | |
| | | Physical Collocation - Virtual to Physical Collocation Relocation, per DS1 Circuit | | | CLO | PE1B1 | | 52.00 | | | | | | | | | |
| | | Physical Collocation - Virtual to Physical Collocation Relocation, per DS3 Circuit | | | CLO | PE1B3 | | 52.00 | | | | | | | | | |
| | | Physical Collocation - Virtual to Physical Collocation In-Place, Per Voice Grade Circuit | | | CLO | PE1BR | | 23.00 | | | | | | | | | |
| | | Physical Collocation Virtual to Physical Collocation In-Place, Per DSO Circuit | | | CLO | PE1BP | | 23.00 | | | | | | | | | |
| | | Physical Collocation - Virtual to Physical Collocation In-Place, Per DS1 Circuit | | | CLO | PE1BS | | 33.00 | | | | | | | | | |
| | | Physical Collocation - Virtual to Physical Collocation In-Place, per DS3 Circuit | | | CLO | PE1BE | | 37.00 | | | | | | | | | |

## COLLOCATION - North Carolina

| CATEGORY | | RATE ELEMENTS | Interim | Zone | BCS | USOC | RATES ($) | | | | | Svc Order Submitted Elec per LSR | Svc Order Submitted Manually per LSR | Attachment: 4 | | Exhibit: B | |
|---|---|---|---|---|---|---|---|---|---|---|---|---|---|---|---|---|---|
| | | | | | | | | | | | | | | Incremental Charge - Manual Svc Order vs. Electronic-1st | Incremental Charge - Manual Svc Order vs. Electronic-Add'l | Incremental Charge - Manual Svc Order vs. Electronic-Disc 1st | Incremental Charge - Manual Svc Order vs. Electronic-Disc Add'l |
| | | | | | | | Rec | Nonrecurring | | Nonrecurring Disconnect | | OSS Rates ($) | | | | | |
| | | | | | | | | First | Add'l | First | Add'l | SOMEC | SOMAN | SOMAN | SOMAN | SOMAN | SOMAN |
| | | Physical Collocation - Virtual to Physical Collocation In-Place/Relocation, space cable facilities assigned to Collocation Space, per 700 cable pairs or fraction thereof | | | CLO | PE1B7 | | 592.00 | | | | | | | | | |
| | | Physical Collocation - Co-Carrier Cross Connects/Direct Connect - Fiber Cable Support Structure, per linear ft. | | | CLO | PE1ES | 0.0028 | | | | | | | | | | |
| | | Physical Collocation - Co-Carrier Cross Connect/Direct Connect - Copper/Coax Cable Support Structure, per lin. ft. | | | CLO | PE1DS | 0.0041 | | | | | | | | | | |
| | | Physical Collocation - Co-Carrier Cross Connects/Direct Connect, Application Fee, per application | | | CLO | PE1DT | | 583.66 | | | | | | | | | |
| | | Physical Collocation - Copper Entrance Cable per Cable (CO manhole to vault splice) | | | CLO | PE1EA | | 1,167.175 | 42.68 | | | | | | | | |
| | | Physical Collocation - Copper Entrance Cable Installation, per 100 Pairs | | | CLO | PE1EB | | 18.086 | | | | | | | | | |
| | | Physical Collocation - Fiber Entrance Cable per Cable (CO manhole to vault splice) | | | CLO | PE1EC | | 971.852 | 42.68 | | | | | | | | |
| | | Physical Collocation - Fiber Entrance Cable Installation, per Fiber | | | CLO | PE1ED | | 7.234 | | | | | | | | | |
| | | Physical Collocation - Application Cost, Simple Augment | | | CLO | PE1KS | | 575.93 | | 1.16 | | | | | | | |
| | | Physical Collocation - Application Cost, Minor Augment | | | CLO | PE1KM | | 806.66 | | 1.16 | | | | | | | |
| | | Physical Collocation - Application Cost, Intermediate Augment | | | CLO | PE1K1 | | 1,023.00 | | 1.16 | | | | | | | |
| | | Physical Collocation - Co-Carrier Cross Connect/Direct Connect - Fiber Cable Support Structure, per cable | I | | CLO | PE1DU | | 532.72 | | | | | | | | | |
| | | Physical Collocation - Co-Carrier Cross Connect/Direct Connect - Copper/Coax Cable Support Structure, per cable | I | | CLO | PE1DV | | 532.72 | | | | | | | | | |
| ADJACENT COLLOCATION | | | | | | | | | | | | | | | | | |
| | | Adjacent Collocation - Space Charge per Sq. Ft. | | | CLOAC | PE1JA | 0.1555 | | | | | | | | | | |
| | | Adjacent Collocation - Electrical Facility Charge per Linear Ft. | | | CLOAC | PE1JC | 5.78 | | | | | | | | | | |
| | | Adjacent Collocation - 2-Wire Cross-Connects | | | UEA,UHL,UDL,UCL | PE1P2 | 0.0239 | 33.53 | 31.65 | | | | | | | | |
| | | Adjacent Collocation - 4-Wire Cross-Connects | | | UEA,UHL,UDL,UCL | PE1P4 | 0.0477 | 33.67 | 31.70 | | | | | | | | |
| | | Adjacent Collocation - DS1 Cross-Connects | | | UEA,UHL,UDL,UCL | PE1P1 | 1.28 | 52.87 | 39.86 | | | | | | | | |
| | | Adjacent Collocation - DS3 Cross-Connects | | | UEA,UHL,UDL,UCL | PE1P3 | 17.35 | 51.97 | 38.59 | | | | | | | | |
| | | Adjacent Collocation - 2-Fiber Cross-Connect | | | CLOAC | PE1F2 | 2.94 | 51.97 | 38.59 | | | | | | | | |
| | | Adjacent Collocation - 4-Fiber Cross-Connect | | | CLOAC | PE1F4 | 5.62 | 64.53 | 51.15 | | | | | | | | |
| | | Adjacent Collocation - Application Fee | | | CLOAC | PE1JB | | 3,139.00 | | | | | | | | | |
| | | Adjacent Collocation - 120V, Single Phase Standby Power Rate per AC Breaker Amp | | | CLOAC | PE1FB | 5.50 | | | | | | | | | | |
| | | Adjacent Collocation - 240V, Single Phase Standby Power Rate per AC Breaker Amp | | | CLOAC | PE1FD | 11.01 | | | | | | | | | | |
| | | Adjacent Collocation - 120V, Three Phase Standby Power Rate per AC Breaker Amp | | | CLOAC | PE1FE | 16.51 | | | | | | | | | | |
| | | Adjacent Collocation - 277V, Three Phase Standby Power Rate per AC Breaker Amp | | | CLOAC | PE1FG | 38.12 | | | | | | | | | | |
| VIRTUAL COLLOCATION | | | | | | | | | | | | | | | | | |
| | | Virtual Collocation - Application Fee | | | AMTFS | EAF | | 1,208.00 | | 1.16 | | | | 26.94 | 12.76 | | |
| | | Virtual Collocation Administrative Only - Application Fee | I | | AMTFS | VE1AF | | 741.44 | | | | | | | | | |
| | | Virtual Collocation - Cable Installation Cost, per cable | | | AMTFS | ESPCX | | 2,750.00 | | | | | | 26.94 | 12.76 | | |
| | | Virtual Collocation - Floor Space, per sq. ft. | | | AMTFS | ESPVX | 3.20 | | | | | | | | | | |
| | | Virtual Collocation - Power, per fused amp | | | AMTFS | ESPAX | 3.48 | | | | | | | | | | |
| | | Virtual Collocation - Cable Support Structure, per entrance cable | | | AMTFS | ESPSX | 12.60 | | | | | | | | | | |
| | | Virtual Collocation - 2-wire Cross Connects (loop) | | | UEANL,UEA,UDN,UDC,UAL,UHL,UCL,UEQ, UNCVX, UNCDX, UNCNX | UEAC2 | 0.0208 | | | | | | | 26.94 | 12.76 | | |
| | | Virtual Collocation - 4-wire Cross Connects (loop) | | | UEA,UHL,UCL,UDL, UAL, UDN, UNCVX, UNCDX | UEAC4 | 0.0417 | | | | | | | 26.94 | 12.76 | | |

| COLLOCATION - North Carolina | | | | | | | | | | | | | | Attachment: 4 | | Exhibit: B | |
|---|---|---|---|---|---|---|---|---|---|---|---|---|---|---|---|---|---|
| CATEGORY | | RATE ELEMENTS | Interim | Zone | BCS | USOC | RATES ($) | | | | | Svc Order Submitted Elec per LSR | Svc Order Submitted Manually per LSR | Incremental Charge - Manual Svc Order vs. Electronic-1st | Incremental Charge - Manual Svc Order vs. Electronic-Add'l | Incremental Charge - Manual Svc Order vs. Electronic-Disc 1st | Incremental Charge - Manual Svc Order vs. Electronic-Disc Add'l |
| | | | | | | | Rec | Nonrecurring | | Nonrecurring Disconnect | | OSS Rates ($) | | | | | |
| | | | | | | | | First | Add'l | First | Add'l | SOMEC | SOMAN | SOMAN | SOMAN | SOMAN | SOMAN |
| | | Virtual Collocation - 2-Fiber Cross Connects | | | UDL12, UDLO3, U1T48, U1T12, U1T03, ULDO3, ULD12, ULD48, UDF | CNC2F | 1.86 | | | | | | | 26.94 | 12.76 | | |
| | | Virtual Collocation - 4-Fiber Cross Connects | | | UDL12, UDLO3, U1T48, U1T12, U1T03, ULDO3, ULD12, ULD48, UDF | CNC4F | 3.73 | | | | | | | 26.94 | 12.76 | | |
| | | Virtual collocation - Special Access & UNE, cross-connect per DS1 | | | USL,ULC, ULR, UXTD1, UNC1X, ULDD1, U1TD1, USLEL, UNLD1, UEPEX, UEPDX | CNC1X | 0.3978 | | | | | | | 26.94 | 12.76 | | |
| | | Virtual collocation - Special Access & UNE, cross-connect per DS3 | | | USL,UE3, U1TD3, UXTS1, UXTD3, UNC3X, UNCSX, ULDD3, U1TS1, ULDS1, UDLSX, UNLD3 | CND3X | 4.18 | | | | | | | 26.94 | 12.76 | | |
| | | Virtual Collocation - Co-Carrier Cross Connects - Fiber Cable Support Structure, per linear foot | | | AMTFS | VE1CB | 0.0028 | | | | | | | | | | |
| | | Virtual Collocation - Co-Carrier Cross Connects - Copper/Coax Cable Support Structure, per linear ft | | | AMTFS | VE1CD | 0.0041 | | | | | | | | | | |
| | | Virtual Collocation - Co-Carrier Cross Connects - Fiber Cable Support Structure,per cable | | | AMTFS | VE1CC | | 532.72 | | | | | | 26.94 | 12.76 | | |
| | | Virtual Collocation - Co-Carrier Cross Connects - Copper/Coax Cable Support Structure, per cable | | | AMTFS | VE1CE | | 532.72 | | | | | | 26.94 | 12.76 | | |
| | | Virtual Collocation Cable Records - per request | | | AMTFS | VE1BA | | 1474.00 I | 947.42 S | 247.64 I | 247.64 S | | | | | | |
| | | Virtual Collocation Cable Records - VG/DS0 Cable, per cable record | | | AMTFS | VE1BB | | 629.42 I | 629.42 S | 350.10 I | 350.10 S | | | | | | |
| | | Virtual Collocation Cable Records - VG/DS0 Cable, per each 100 pair | | | AMTFS | VE1BC | | 8.87 I | 8.87 S | 10.43 I | 10.43 S | | | | | | |
| | | Virtual Collocation Cable Records - DS1, per T1TIE | | | AMTFS | VE1BD | | 4.40 I | 4.40 S | 5.17 I | 5.17 S | | | | | | |
| | | Virtual Collocation Cable Records - DS3, per T3TIE | | | AMTFS | VE1BE | | 15.38 I | 15.38 S | 18.09 I | 18.09 S | | | | | | |
| | | Virtual Collocation Cable Records - Fiber Cable, per 99 fiber records | | | AMTFS | VE1BF | | 165.38 I | 165.38 S | 144.87 I | 144.87 S | | | | | | |
| | | Virtual collocation - Security Escort - Basic, per half hour | | | AMTFS | SPTBX | | 41.00 | 25.00 | | | | | 26.94 | 12.76 | | |
| | | Virtual collocation - Security Escort - Overtime, per half hour | | | AMTFS | SPTOX | | 48.00 | 30.00 | | | | | 26.94 | 12.76 | | |
| | | Virtual collocation - Security Escort - Premium, per half hour | | | AMTFS | SPTPX | | 55.00 | 35.00 | | | | | 26.94 | 12.76 | | |
| | | Virtual collocation - Maintenance in CO - Basic, per half hour | | | AMTFS | CTRLX | | 52.59 | 21.45 | | | | | 26.94 | 12.76 | | |
| | | Virtual collocation - Maintenance in CO - Overtime, per half hour | | | AMTFS | SPTOM | | 70.24 | 28.11 | | | | | 26.94 | 12.76 | | |
| | | Virtual collocation - Maintenance in CO - Premium per half hour | | | AMTFS | SPTPM | | 87.88 | 34.77 | | | | | 26.94 | 12.76 | | |
| | | Virtual Collocation - Request Resend of CFA Information, per CLLI | | | AMTFS | VE1QR | | 77.48 | | | | | | | | | |

| COLLOCATION - South Carolina | | | | | | | | | | | | | | Attachment: 4 | | Exhibit: B | |
|---|---|---|---|---|---|---|---|---|---|---|---|---|---|---|---|---|---|
| CATEGORY | | RATE ELEMENTS | Interim | Zone | BCS | USOC | RATES ($) | | | | | Svc Order Submitted Elec per LSR | Svc Order Submitted Manually per LSR | Incremental Charge - Manual Svc Order vs. Electronic-1st | Incremental Charge - Manual Svc Order vs. Electronic-Add'l | Incremental Charge - Manual Svc Order vs. Electronic-Disc 1st | Incremental Charge - Manual Svc Order vs. Electronic-Disc Add'l |
| | | | | | | | Rec | Nonrecurring | | Nonrecurring Disconnect | | OSS Rates ($) | | | | | |
| | | | | | | | | First | Add'l | First | Add'l | SOMEC | SOMAN | SOMAN | SOMAN | SOMAN | SOMAN |
| PHYSICAL COLLOCATION | | | | | | | | | | | | | | | | | |
| | | Physical Collocation - Initial Application Fee | | | CLO | PE1BA | | 1,883.67 | | | | | | | | | |
| | | Physical Collocation - Subsequent Application Fee | | | CLO | PE1CA | | 1,570.10 | | | | | | | | | |
| | | Physical Collocation Administrative Only - Application Fee | | | CLO | PE1BL | | 743.66 | | | | | | | | | |
| | | Physical Collocation - Space Preparation - Firm Order Processing | | | CLO | PE1SJ | | 602.05 | | | | | | | | | |
| | | Physical Collocation - Space Preparation - C.O. Modification per square ft. | | | CLO | PE1SK | 2.75 | | | | | | | | | | |
| | | Physical Collocation - Space Preparation, Common Systems Modifications-Cageless, per square foot | | | CLO | PE1SL | 3.24 | | | | | | | | | | |
| | | Physical Collocation - Space Preparation - Common Systems Modifications-Caged, per cage | | | CLO | PE1SM | 110.16 | | | | | | | | | | |
| | | Physical Collocation - Cable Installation, Pricing, non-recurring charge, per Entrance Cable | | | CLO | PE1BD | | 794.22 | | 22.54 | | | | | | | |
| | | Physical Collocation - Floor Space, per sq feet | | | CLO | PE1PJ | 3.95 | | | | | | | | | | |
| | | Physical Collocation - Cable Support Structure, per Entrance Cable | | | CLO | PE1PM | 21.33 | | | | | | | | | | |
| | | Physical Collocation - Power, -48V DC Power - per Fused Amp | | | CLO | PE1PL | 9.19 | | | | | | | | | | |
| | | Physical Collocation - Power Reconfiguration Only, Application Fee | I | | CLO | PE1PR | | 400.33 | | | | | | | | | |
| | | Physical Collocation - Power, 120V AC Power, Single Phase, per Breaker Amp | | | CLO | PE1FB | 5.67 | | | | | | | | | | |
| | | Physical Collocation - Power, 240V AC Power, Single Phase, per Breaker Amp | | | CLO | PE1FD | 11.36 | | | | | | | | | | |
| | | Physical Collocation - Power, 120V AC Power, Three Phase, per Breaker Amp | | | CLO | PE1FE | 17.03 | | | | | | | | | | |
| | | Physical Collocation - Power, 277V AC Power, Three Phase, per Breaker Amp | | | CLO | PE1FG | 39.33 | | | | | | | | | | |
| | | Physical Collocation - 2-wire cross-connect, loop, provisioning | | | UEANL,UEQ, UNLDX, UNCNX, UEA, UCL, UAL, UHL, UDC, UDN, UNCVX | PE1P2 | 0.0341 | 12.32 | 11.83 | 6.04 | 5.45 | | | | | | |
| | | Physical Collocation - 4-wire cross-connect, loop, provisioning | | | UEA, UHL, UNCVX, UNCDX, UCL, UDL | PE1P4 | 0.0682 | 12.42 | 11.90 | 6.40 | 5.74 | | | | | | |
| | | Physical Collocation -DS1 Cross-Connect for Physical Collocation, provisioning | | | WDS1L,WDS1S, UXTD1, ULDD1, USLEL, UNLD1, UEPEX, UEPDX, USL, ULC, U1TD1, UNC1X | PE1P1 | 1.12 | 22.08 | 15.96 | 6.42 | 5.80 | | | | | | |
| | | Physical Collocation - DS3 Cross-Connect, provisioning | | | UE3,U1TD3, UXTD3, UXTS1, UNC3X, UNCSX, ULDD3, U1TS1,ULDS1, UNLD3 | PE1P3 | 14.21 | 20.94 | 15.23 | 7.39 | 5.93 | | | | | | |
| | | Physical Collocation - 2-Fiber Cross-Connect | | | CLO, ULDO3, ULD12, ULD48, U1TO3, U1T12, U1T48, UDLO3, UDL12, UDF | PE1F2 | 2.82 | 20.94 | 15.23 | 7.40 | 5.93 | | | | | | |
| | | Physical Collocation - 4-Fiber Cross-Connect | | | ULDO3, ULD12, ULD48, U1TO3, U1T12, U1T48, UDLO3, UDL12, UDF | PE1F4 | 5.01 | 25.61 | 19.90 | 9.73 | 8.26 | | | | | | |

| COLLOCATION - South Carolina | | | | | | | | | | | | | | Attachment: 4 | | Exhibit: B | |
|---|---|---|---|---|---|---|---|---|---|---|---|---|---|---|---|---|---|
| CATEGORY | | RATE ELEMENTS | Interim | Zone | BCS | USOC | RATES ($) | | | | | Svc Order Submitted Elec per LSR | Svc Order Submitted Manually per LSR | Incremental Charge - Manual Svc Order vs. Electronic-1st | Incremental Charge - Manual Svc Order vs. Electronic-Add'l | Incremental Charge - Manual Svc Order vs. Electronic-Disc 1st | Incremental Charge - Manual Svc Order vs. Electronic-Disc Add'l |
| | | | | | | | Rec | Nonrecurring | | Nonrecurring Disconnect | | OSS Rates ($) | | | | | |
| | | | | | | | | First | Add'l | First | Add'l | SOMEC | SOMAN | SOMAN | SOMAN | SOMAN | SOMAN |
| | | Physical Collocation - Space enclosure, welded wire, first 100 square feet | | | CLO | PE1BW | 219.19 | | | | | | | | | | |
| | | Physical Collocation - Space enclosure, welded wire, each additional 50 square feet | | | CLO | PE1CW | 21.50 | | | | | | | | | | |
| | | Physical Collocation - Security Access System, Security System, per Central Office | | | CLO | PE1AX | 74.72 | | | | | | | | | | |
| | | Physical Collocation -Security Access System - New Card Activation, per Card Activation (First), per State | | | CLO | PE1A1 | 0.0601 | 27.85 | | | | | | | | | |
| | | Physical Collocation-Security Access System-Administrative Change, existing Access Card, per Request, per State, per Card | | | CLO | PE1AA | | 7.81 | | | | | | | | | |
| | | Physical Collocation - Security Access System - Replace Lost or Stolen Card, per Card | | | CLO | PE1AR | | 22.83 | | | | | | | | | |
| | | Physical Collocation - Security Access - Initial Key, per Key | | | CLO | PE1AK | | 13.13 | | | | | | | | | |
| | | Physical Collocation - Security Access - Key, Replace Lost or Stolen Key, per Key | | | CLO | PE1AL | | 13.13 | | | | | | | | | |
| | | Physical Collocation - Space Availability Report, per Central Office Requested | | | CLO | PE1SR | | 1,077.57 | | | | | | | | | |
| | | Physical Collocation - CFA Information Resend Request, per premises, per request | | | CLO | PE1C9 | | 77.71 | | | | | | | | | |
| | | Physical Collocation - Cable Records, per request | | | CLO | PE1CR | | 760.98 | 489.20 | 133.29 | | | | | | | |
| | | Physical Collocation, Cable Records, VG/DS0 Cable, per cable record (maximum 3600 records) | | | CLO | PE1CD | | 327.65 | | 189.54 | | | | | | | |
| | | Physical Collocation, Cable Records, VG/DS0 Cable, per each 100 pair | | | CLO | PE1CO | | 4.82 | | 5.91 | | | | | | | |
| | | Physical Collocation, Cable Records, DS1, per T1 TIE | | | CLO | PE1C1 | | 2.26 | | 2.77 | | | | | | | |
| | | Physical Collocation, Cable Records, DS3, per T3 TIE | | | CLO | PE1C3 | | 7.90 | | 9.68 | | | | | | | |
| | | Physical Collocation - Cable Records, Fiber Cable, per cable record (maximum 99 records) | | | CLO | PE1CB | | 84.68 | | 77.30 | | | | | | | |
| | | Physical Collocation - Security Escort for Basic Time - normally scheduled work, per half hour | | | CLO | PE1BT | | 16.96 | 10.75 | | | | | | | | |
| | | Physical Collocation - Security Escort for Overtime - outside of normally scheduled working hours on a scheduled work day, per half hour | | | CLO | PE1OT | | 22.10 | 13.89 | | | | | | | | |
| | | Physical Collocation - Security Escort for Premium Time - outside of scheduled work day, per half hour | | | CLO | PE1PT | | 27.23 | 17.02 | | | | | | | | |
| | | Physical Collocation - Virtual to Physical Collocation Relocation, per Voice Grade Circuit | | | CLO | PE1BV | | 33.00 | | | | | | | | | |
| | | Physical Collocation - Virtual to Physical Collocation Relocation, per DSO Circuit | | | CLO | PE1BO | | 33.00 | | | | | | | | | |
| | | Physical Collocation - Virtual to Physical Collocation Relocation, per DS1 Circuit | | | CLO | PE1B1 | | 52.00 | | | | | | | | | |
| | | Physical Collocation - Virtual to Physical Collocation Relocation, per DS3 Circuit | | | CLO | PE1B3 | | 52.00 | | | | | | | | | |
| | | Physical Collocation - Virtual to Physical Collocation In-Place, Per Voice Grade Circuit | | | CLO | PE1BR | | 23.00 | | | | | | | | | |
| | | Physical Collocation Virtual to Physical Collocation In-Place, Per DSO Circuit | | | CLO | PE1BP | | 23.00 | | | | | | | | | |
| | | Physical Collocation - Virtual to Physical Collocation In-Place, Per DS1 Circuit | | | CLO | PE1BS | | 33.00 | | | | | | | | | |
| | | Physical Collocation - Virtual to Physical Collocation In-Place, per DS3 Circuit | | | CLO | PE1BE | | 37.00 | | | | | | | | | |
| | | Physical Collocation - Virtual to Physical Collocation In-Place/Relocation, space cable facilities assigned to Collocation Space, per 700 cable pairs or fraction thereof | | | CLO | PE1B7 | | 592.00 | | | | | | | | | |
| | | Physical Collocation - Co-Carrier Cross Connects/Direct Connect - Fiber Cable Support Structure, per linear ft. | | | CLO | PE1ES | 0.001 | | | | | | | | | | |
| | | Physical Collocation - Co-Carrier Cross Connect/Direct Connect - Copper/Coax Cable Support Structure, per lin. ft. | | | CLO | PE1DS | 0.0015 | | | | | | | | | | |

## COLLOCATION - South Carolina

| CATEGORY | RATE ELEMENTS | Interim | Zone | BCS | USOC | RATES ($) | | | | | Svc Order Submitted Elec per LSR | Svc Order Submitted Manually per LSR | Attachment: 4 | | Exhibit: B | |
|---|---|---|---|---|---|---|---|---|---|---|---|---|---|---|---|---|
| | | | | | | | | | | | | | Incremental Charge - Manual Svc Order vs. Electronic-1st | Incremental Charge - Manual Svc Order vs. Electronic-Add'l | Incremental Charge - Manual Svc Order vs. Electronic-Disc 1st | Incremental Charge - Manual Svc Order vs. Electronic-Disc Add'l |
| | | | | | | Rec | Nonrecurring | | Nonrecurring Disconnect | | OSS Rates ($) | | | | | |
| | | | | | | | First | Add'l | First | Add'l | SOMEC | SOMAN | SOMAN | SOMAN | SOMAN | SOMAN |
| | Physical Collocation - Co-Carrier Cross Connects/Direct Connect, Application Fee, per application | | | CLO | PE1DT | | 584.42 | | | | | | | | | |
| | Physical Collocation - Copper Entrance Cable per Cable (CO manhole to vault splice) | | | CLO | PE1EA | | 1,136.597 | 42.808 | | | | | | | | |
| | Physical Collocation - Copper Entrance Cable Installation, per 100 Pairs | | | CLO | PE1EB | | 18.14 | | | | | | | | | |
| | Physical Collocation - Fiber Entrance Cable per Cable (CO manhole to vault splice) | | | CLO | PE1EC | | 940.686 | 42.808 | | | | | | | | |
| | Physical Collocation - Fiber Entrance Cable Installation, per Fiber | | | CLO | PE1ED | | 7.256 | | | | | | | | | |
| | Physical Collocation - Application Cost, Simple Augment | | | CLO | PE1KS | | 594.27 | | 1.21 | | | | | | | |
| | Physical Collocation - Application Cost, Minor Augment | | | CLO | PE1KM | | 833.26 | | 1.21 | | | | | | | |
| | Physical Collocation - Application Cost, Intermediate Augment | | | CLO | PE1K1 | | 1,058.00 | | 1.21 | | | | | | | |
| | Physical Collocation - Co-Carrier Cross Connect/Direct Connect - Fiber Cable Support Structure, per cable | I | | CLO | PE1DU | | 536.56 | | | | | | | | | |
| | Physical Collocation - Co-Carrier Cross Connect/Direct Connect - Copper/Coax Cable Support Structure, per cable | I | | CLO | PE1DV | | 536.56 | | | | | | | | | |
| ADJACENT COLLOCATION | | | | | | | | | | | | | | | | |
| | Adjacent Collocation - Space Charge per Sq. Ft. | | | CLOAC | PE1JA | 0.0939 | | | | | | | | | | |
| | Adjacent Collocation - Electrical Facility Charge per Linear Ft. | | | CLOAC | PE1JC | 6.40 | | | | | | | | | | |
| | Adjacent Collocation - 2-Wire Cross-Connects | | | UEA,UHL,UDL,UCL | PE1P2 | 0.0264 | 12.32 | 11.83 | 6.04 | 5.45 | | | | | | |
| | Adjacent Collocation - 4-Wire Cross-Connects | | | UEA,UHL,UDL,UCL | PE1P4 | 0.0527 | 12.42 | 11.90 | 6.40 | 5.74 | | | | | | |
| | Adjacent Collocation - DS1 Cross-Connects | | | UEA,UHL,UDL,UCL | PE1P1 | 1.03 | 22.08 | 15.96 | 6.42 | 5.80 | | | | | | |
| | Adjacent Collocation - DS3 Cross-Connects | | | UEA,UHL,UDL,UCL | PE1P3 | 14.00 | 20.94 | 15.23 | 7.39 | 5.93 | | | | | | |
| | Adjacent Collocation - 2-Fiber Cross-Connect | | | CLOAC | PE1F2 | 2.37 | 20.94 | 15.23 | 7.40 | 5.93 | | | | | | |
| | Adjacent Collocation - 4-Fiber Cross-Connect | | | CLOAC | PE1F4 | 4.53 | 25.61 | 19.90 | 9.73 | 8.26 | | | | | | |
| | Adjacent Collocation - Application Fee | | | CLOAC | PE1JB | | 1,580.20 | | | | | | | | | |
| | Adjacent Collocation - 120V, Single Phase Standby Power Rate per AC Breaker Amp | | | CLOAC | PE1FB | 5.67 | | | | | | | | | | |
| | Adjacent Collocation - 240V, Single Phase Standby Power Rate per AC Breaker Amp | | | CLOAC | PE1FD | 11.36 | | | | | | | | | | |
| | Adjacent Collocation - 120V, Three Phase Standby Power Rate per AC Breaker Amp | | | CLOAC | PE1FE | 17.03 | | | | | | | | | | |
| | Adjacent Collocation - 277V, Three Phase Standby Power Rate per AC Breaker Amp | | | CLOAC | PE1FG | 39.33 | | | | | | | | | | |
| VIRTUAL COLLOCATION | | | | | | | | | | | | | | | | |
| | Virtual Collocation - Application Fee | | | AMTFS | EAF | | 1,207.95 | | 0.51 | | | | | | | |
| | Virtual Collocation Administrative Only - Application Fee | I | | AMTFS | VE1AF | | 743.66 | | | | | | | | | |
| | Virtual Collocation - Cable Installation Cost, per cable | | | AMTFS | ESPCX | | 794.22 | | 22.54 | | | | | | | |
| | Virtual Collocation - Floor Space, per sq. ft. | | | AMTFS | ESPVX | 3.95 | | | | | | | | | | |
| | Virtual Collocation - Power, per fused amp | | | AMTFS | ESPAX | 9.19 | | | | | | | | | | |
| | Virtual Collocation - Cable Support Structure, per entrance cable | | | AMTFS | ESPSX | 18.66 | | | | | | | | | | |
| | Virtual Collocation - 2-wire Cross Connects (loop) | | | UEANL,UEA,UDN,UDC,UAL,UHL,UCL,UEQ, UNCVX, UNCDX, UNCNX | UEAC2 | 0.0317 | 12.32 | 11.83 | 6.04 | 5.45 | | | | | | |
| | Virtual Collocation - 4-wire Cross Connects (loop) | | | UEA,UHL,UCL,UDL, UAL, UDN, UNCVX, UNCDX | UEAC4 | 0.0634 | 12.42 | 11.90 | 6.40 | 5.74 | | | | | | |
| | Virtual Collocation - 2-Fiber Cross Connects | | | UDL12, UDLO3, U1T48, U1T12, U1T03, ULDO3, ULD12, ULD48, UDF | CNC2F | 2.86 | 20.94 | 15.23 | 7.40 | 5.93 | | | | | | |

| COLLOCATION - South Carolina | | | | | | | | | | | | | | Attachment: 4 | | Exhibit: B | |
|---|---|---|---|---|---|---|---|---|---|---|---|---|---|---|---|---|---|
| CATEGORY | | RATE ELEMENTS | Interim | Zone | BCS | USOC | RATES ($) | | | | | Svc Order Submitted Elec per LSR | Svc Order Submitted Manually per LSR | Incremental Charge - Manual Svc Order vs. Electronic-1st | Incremental Charge - Manual Svc Order vs. Electronic-Add'l | Incremental Charge - Manual Svc Order vs. Electronic-Disc 1st | Incremental Charge - Manual Svc Order vs. Electronic-Disc Add'l |
| | | | | | | | Rec | Nonrecurring | | Nonrecurring Disconnect | | OSS Rates ($) | | | | | |
| | | | | | | | | First | Add'l | First | Add'l | SOMEC | SOMAN | SOMAN | SOMAN | SOMAN | SOMAN |
| | | Virtual Collocation - 4-Fiber Cross Connects | | | UDL12, UDLO3, U1T48, U1T12, U1T03, ULDO3, ULD12, ULD48, UDF | CNC4F | 5.71 | 25.61 | 19.90 | 9.73 | 8.26 | | | | | | |
| | | Virtual collocation - Special Access & UNE,cross-connect per DS1 | | | USL,ULC, ULR, UXTD1, UNC1X, ULDD1, U1TD1, USLEL, UNLD1, UEPEX, UEPDX | CNC1X | 1.12 | 22.08 | 15.96 | 6.42 | 5.80 | | | | | | |
| | | Virtual collocation - Special Access & UNE, cross-connect per DS3 | | | USL,UE3, U1TD3, UXTS1, UXTD3, UNC3X, UNCSX, ULDD3, U1TS1, ULDS1, UDLSX, UNLD3 | CND3X | 14.21 | 20.94 | 15.23 | 7.39 | 5.93 | | | | | | |
| | | Virtual Collocation - Co-Carrier Cross Connects - Fiber Cable Support Structure, per linear foot | | | AMTFS | VE1CB | 0.0022 | | | | | | | | | | |
| | | Virtual Collocation - Co-Carrier Cross Connects - Copper/Coax Cable Support Structure, per linear ft | | | AMTFS | VE1CD | 0.0033 | | | | | | | | | | |
| | | Virtual Collocation - Co-Carrier Cross Connects - Fiber Cable Support Structure,per cable | | | AMTFS | VE1CC | | 536.56 | | | | | | | | | |
| | | Virtual Collocation - Co-Carrier Cross Connects - Copper/Coax Cable Support Structure, per cable | | | AMTFS | VE1CE | | 536.56 | | | | | | | | | |
| | | Virtual Collocation Cable Records - per request | | | AMTFS | VE1BA | | 760.98 | 489.20 | 133.29 | | | | | | | |
| | | Virtual Collocation Cable Records - VG/DS0 Cable, per cable record | | | AMTFS | VE1BB | | 327.65 | | 189.54 | | | | | | | |
| | | Virtual Collocation Cable Records - VG/DS0 Cable, per each 100 pair | | | AMTFS | VE1BC | | 4.82 | | 5.91 | | | | | | | |
| | | Virtual Collocation Cable Records - DS1, per T1TIE | | | AMTFS | VE1BD | | 2.26 | | 2.77 | | | | | | | |
| | | Virtual Collocation Cable Records - DS3, per T3TIE | | | AMTFS | VE1BE | | 7.90 | | 9.68 | | | | | | | |
| | | Virtual Collocation Cable Records - Fiber Cable, per 99 fiber records | | | AMTFS | VE1BF | | 84.68 | | 77.30 | | | | | | | |
| | | Virtual collocation - Security Escort - Basic, per half hour | | | AMTFS | SPTBX | | 16.96 | 10.75 | | | | | | | | |
| | | Virtual collocation - Security Escort - Overtime, per half hour | | | AMTFS | SPTOX | | 22.10 | 13.89 | | | | | | | | |
| | | Virtual collocation - Security Escort - Premium, per half hour | | | AMTFS | SPTPX | | 27.23 | 17.02 | | | | | | | | |
| | | Virtual collocation - Maintenance in CO - Basic, per half hour | | | AMTFS | CTRLX | | 27.99 | 10.75 | | | | | | | | |
| | | Virtual collocation - Maintenance in CO - Overtime, per half hour | | | AMTFS | SPTOM | | 36.56 | 13.89 | | | | | | | | |
| | | Virtual collocation - Maintenance in CO - Premium per half hour | | | AMTFS | SPTPM | | 45.12 | 17.02 | | | | | | | | |
| | | Virtual Collocation - Request Resend of CFA Information, per CLLI | | | AMTFS | VE1QR | | 77.71 | | | | | | | | | |

## COLLOCATION - Tennessee

| CATEGORY | | RATE ELEMENTS | Interim | Zone | BCS | USOC | RATES ($) | | | | | Svc Order Submitted Elec per LSR | Svc Order Submitted Manually per LSR | Attachment: 4 Incremental Charge - Manual Svc Order vs. Electronic-1st | Attachment: 4 Incremental Charge - Manual Svc Order vs. Electronic-Add'l | Exhibit: B Incremental Charge - Manual Svc Order vs. Electronic-Disc 1st | Exhibit: B Incremental Charge - Manual Svc Order vs. Electronic-Disc Add'l |
|---|---|---|---|---|---|---|---|---|---|---|---|---|---|---|---|---|---|
| | | | | | | | Rec | Nonrecurring | | Nonrecurring Disconnect | | OSS Rates ($) | | | | | |
| | | | | | | | | First | Add'l | First | Add'l | SOMEC | SOMAN | SOMAN | SOMAN | SOMAN | SOMAN |
| PHYSICAL COLLOCATION | | | | | | | | | | | | | | | | | |
| | | Physical Collocation - Cageless - Application Fee | | | CLO | PE1CH | | 2,633.00 | | | | | | | | | |
| | | Physical Collocation Administrative Only - Application Fee | I | | CLO | PE1BL | | 743.25 | | | | | | | | | |
| | | Physical Collocation - Space Preparation - Firm Order Processing | I | | CLO | PE1SJ | | 1,204.00 | | | | | | | | | |
| | | Physical Collocation - Space Preparation - C.O. Modification per square ft. | I | | CLO | PE1SK | 2.74 | | | | | | | | | | |
| | | Physical Collocation - Space Preparation, Common Systems Modifications-Cageless, per square foot | I | | CLO | PE1SL | 2.95 | | | | | | | | | | |
| | | Physical Collocation - Space Preparation - Common Systems Modifications-Caged, per cage | I | | CLO | PE1SM | 100.14 | | | | | | | | | | |
| | | Physical Collocation - Cageless - Cable Installation Cost, per cable | | | CLO | PE1ZA | | 1,749.00 | | | | | | | | | |
| | | Physical Collocation - Cageless - Floor Space, per sq. ft. | | | CLO | PE1ZB | 3.91 | | | | | | | | | | |
| | | Physical Collocation - Floor Space, per sq feet | I | | CLO | PE1PJ | 5.94 | | | | | | | | | | |
| | | Physical Collocation - Cageless - Cable Support Structure, per Entrance Cable | | | CLO | PE1CJ | 17.87 | | | | | | | | | | |
| | | Physical Collocation - Cable Support Structure, per Entrance Cable | I | | CLO | PE1PM | 19.80 | | | | | | | | | | |
| | | Physical Collocation - Cageless - Power, per Fused Amp | | | CLO | PE1ZC | 6.79 | | | | | | | | | | |
| | | Physical Collocation - Power, -48V DC Power - per Fused Amp | I | | CLO | PE1PL | 8.87 | | | | | | | | | | |
| | | Physical Collocation - Power Reconfiguration Only, Application Fee | I | | CLO | PE1PR | | 400.10 | | | | | | | | | |
| | | Physical Collocation - Power, 120V AC Power, Single Phase, per Breaker Amp | I | | CLO | PE1FB | 5.60 | | | | | | | | | | |
| | | Physical Collocation - Power, 240V AC Power, Single Phase, per Breaker Amp | I | | CLO | PE1FD | 11.22 | | | | | | | | | | |
| | | Physical Collocation - Power, 120V AC Power, Three Phase, per Breaker Amp | I | | CLO | PE1FE | 16.82 | | | | | | | | | | |
| | | Physical Collocation - Power, 277V AC Power, Three Phase, per Breaker Amp | I | | CLO | PE1FG | 38.84 | | | | | | | | | | |
| | | Physical Collocation - 2-wire cross-connect, loop, provisioning | I | | UEANL,UEQ, UNLDX, UNCNX, UEA, UCL, UAL, UHL, UDC, UDN, UNCVX | PE1P2 | 0.033 | 33.82 | 31.92 | | | | | | | | |
| | | Physcial Collocation - Cageless - 2-Wire Cross-Connects | | | UNLDX, UNCNX | PE1ZD | 0.57 | 11.62 | 9.90 | 10.38 | 8.66 | | | | | | |
| | | Physical Collocation - 4-wire cross-connect, loop, provisioning | I | | UEA, UHL, UNCVX, UNCDX, UCL, UDL | PE1P4 | 0.066 | 33.94 | 31.95 | | | | | | | | |
| | | Physical Collocation - Cageless - 4-Wire Cross Connects | | | UNCVX, UNCDX, | PE1ZE | 0.57 | 11.81 | 10.04 | 10.44 | 8.67 | | | | | | |
| | | Physical Collocation -DS1 Cross-Connect for Physical Collocation, provisioning | I | | WDS1L,WDS1S, UXTD1, ULDD1, USLEL, UNLD1, UEPEX, UEPDX, USL, ULC, U1TD1, UNC1X | PE1P1 | 1.51 | 53.27 | 40.16 | | | | | | | | |
| | | Physical Collocation - Cageless - DS1 Cross Connects | | | WDS1L,WDS1S, UXTD1, ULDD1, USLEL, UNLD1, UEPEX, UEPDX | PE1ZF | 1.32 | 32.22 | 17.76 | 10.46 | 8.75 | | | | | | |
| | | Physical Collocation - DS3 Cross-Connect, provisioning | I | | UE3,U1TD3, UXTD3, UXTS1, UNC3X, UNCSX, ULDD3, U1TS1,ULDS1, UNLD3 | PE1P3 | 19.26 | 52.37 | 38.89 | | | | | | | | |

| COLLOCATION - Tennessee | | | | | | | | | | | | | | Attachment: 4 | | Exhibit: B | |
|---|---|---|---|---|---|---|---|---|---|---|---|---|---|---|---|---|---|
| CATEGORY | | RATE ELEMENTS | Interim | Zone | BCS | USOC | RATES ($) | | | | | Svc Order Submitted Elec per LSR | Svc Order Submitted Manually per LSR | Incremental Charge - Manual Svc Order vs. Electronic-1st | Incremental Charge - Manual Svc Order vs. Electronic-Add'l | Incremental Charge - Manual Svc Order vs. Electronic-Disc 1st | Incremental Charge - Manual Svc Order vs. Electronic-Disc Add'l |
| | | | | | | | Rec | Nonrecurring | | Nonrecurring Disconnect | | OSS Rates ($) | | | | | |
| | | | | | | | | First | Add'l | First | Add'l | SOMEC | SOMAN | SOMAN | SOMAN | SOMAN | SOMAN |
| | | Physcial Collocation - Cageless - DS3 Cross Connects | | | UE3,U1TD3, UXTD3, UXTS1, UNC3X, UNCSX, ULDD3, U1TS1,ULDS1, UNLD3 | PE1ZG | 12.32 | 29.97 | 16.30 | 12.03 | 8.99 | | | | | | |
| | | Physical Collocation - 2-Fiber Cross-Connect | I | | CLO, ULDO3, ULD12, ULD48, U1TO3, U1T12, U1T48, UDLO3, UDL12, UDF | PE1F2 | 15.64 | 41.56 | 29.82 | 12.96 | 10.34 | | | 2.69 | 2.69 | 1.56 | 1.56 |
| | | Physical Collocation - Cageless - 2 Fiber Cross Connect | | | CLO, ULDO3, ULD12, ULD48, U1TO3, U1T12, U1T48, UDLO3, UDL12, UDF | PE1CK | 3.03 | 41.56 | 29.82 | 12.96 | 10.34 | | | | | | |
| | | Physical Collocation - 4-Fiber Cross-Connect | I | | ULDO3, ULD12, ULD48, U1TO3, U1T12, U1T48, UDLO3, UDL12, UDF | PE1F4 | 28.11 | 50.53 | 38.78 | 16.97 | 14.35 | | | 2.69 | 2.69 | 1.56 | 1.56 |
| | | Physical Collocation - Cageless - 4-Fiber Cross-Connect | | | ULDO3, ULD12, ULD48, U1TO3, U1T12, U1T48, UDLO3, UDL12, UDF | PE1CL | 6.06 | 50.53 | 38.78 | 16.97 | 14.35 | | | | | | |
| | | Physical Collocation - Space enclosure, welded wire, first 100 square feet | I | | CLO | PE1BW | 218.53 | | | | | | | | | | |
| | | Physical Collocation - Space enclosure, welded wire, each additional 50 square feet | I | | CLO | PE1CW | 21.44 | | | | | | | | | | |
| | | Physical Collocation - Security Access System - Security System per Central Office | I | | CLO | PE1AX | 55.99 | | | | | | | | | | |
| | | Physical Collocation -Security Access System - New Card Activation, per Card Activation (First), per State | I | | CLO | PE1A1 | 0.059 | 55.67 | | | | | | | | | |
| | | Physical Collocation-Security Access System-Administrative Change, existing Access Card, per Request, per State, per Card | | | CLO | PE1AA | | 15.61 | | | | | | | | | |
| | | Physical Collocation - Security Access System - Replace Lost or Stolen Card, per Card | | | CLO | PE1AR | | 45.64 | | | | | | | | | |
| | | Physical Collocation - Security Access - Initial Key, per Key | | | CLO | PE1AK | | 26.24 | | | | | | | | | |
| | | Physical Collocation - Security Access - Key, Replace Lost or Stolen Key, per Key | | | CLO | PE1AL | | 26.24 | | | | | | | | | |
| | | Physical Collocation - Space Availability Report, per Central Office Requested | | | CLO | PE1SR | | 2,027.00 | 2,154.00 | | | | | | | | |
| | | Physical Collocation - CFA Information Resend Request, per premises, per request | | | CLO | PE1C9 | | 77.67 | | | | | | | | | |
| | | Physical Collocation - Cable Records, per request | I | | CLO | PE1CR | | 1,711.00 | | | | | | | | | |
| | | Physical Collocation, Cable Records, VG/DS0 Cable, per cable record (maximum 3600 records) | I | | CLO | PE1CD | | 925.06 | | | | | | | | | |
| | | Physical Collocation, Cable Records, VG/DS0 Cable, per each 100 pair | I | | CLO | PE1CO | | 18.05 | | | | | | | | | |
| | | Physical Collocation, Cable Records, DS1, per T1 TIE | I | | CLO | PE1C1 | | 8.45 | | | | | | | | | |
| | | Physical Collocation, Cable Records, DS3, per T3 TIE | I | | CLO | PE1C3 | | 29.57 | | | | | | | | | |
| | | Physical Collocation - Cable Records, Fiber Cable, per cable record (maximum 99 records) | I | | CLO | PE1CB | | 279.42 | | | | | | | | | |
| | | Physcial Collocation - Cageless - Security Escort - Basic, per Half Hour | | | CLO | PE1ZM | | 33.15 | 20.44 | | | | | | | | |
| | | Physical Collocation - Cageless - Security Escort - Overtime, per Half Hour | | | CLO | PE1ZN | | 41.50 | 25.61 | | | | | | | | |

| COLLOCATION - Tennessee | | | | | | | | | | | | | | Attachment: 4 | | Exhibit: B | |
|---|---|---|---|---|---|---|---|---|---|---|---|---|---|---|---|---|---|
| CATEGORY | | RATE ELEMENTS | Interim | Zone | BCS | USOC | RATES ($) | | | | | Svc Order Submitted Elec per LSR | Svc Order Submitted Manually per LSR | Incremental Charge - Manual Svc Order vs. Electronic-1st | Incremental Charge - Manual Svc Order vs. Electronic-Add'l | Incremental Charge - Manual Svc Order vs. Electronic-Disc 1st | Incremental Charge - Manual Svc Order vs. Electronic-Disc Add'l |
| | | | | | | | Rec | Nonrecurring | | Nonrecurring Disconnect | | OSS Rates ($) | | | | | |
| | | | | | | | | First | Add'l | First | Add'l | SOMEC | SOMAN | SOMAN | SOMAN | SOMAN | SOMAN |
| | | Physical Collocation - Cageless - Security Escort - Premium, per Half Hour | | | CLO | PE1ZO | | 49.86 | 30.79 | | | | | | | | |
| | | Physical Collocation - Security Escort for Basic Time - normally scheduled work, per half hour | | | CLO | PE1BT | | 33.91 | 21.49 | | | | | | | | |
| | | Physical Collocation - Security Escort for Overtime - outside of normally scheduled working hours on a scheduled work day, per half hour | | | CLO | PE1OT | | 44.17 | 27.76 | | | | | | | | |
| | | Physical Collocation - Security Escort for Premium Time - outside of scheduled work day, per half hour | | | CLO | PE1PT | | 54.42 | 34.02 | | | | | | | | |
| | | Physical Collocation - Virtual to Physical Collocation Relocation, per Voice Grade Circuit | I | | CLO | PE1BV | | 33.00 | | | | | | | | | |
| | | Physical Collocation - Virtual to Physical Collocation Relocation, per DSO Circuit | I | | CLO | PE1BO | | 33.00 | | | | | | | | | |
| | | Physical Collocation - Virtual to Physical Collocation Relocation, per DS1 Circuit | I | | CLO | PE1B1 | | 52.00 | | | | | | | | | |
| | | Physical Collocation - Virtual to Physical Collocation Relocation, per DS3 Circuit | I | | CLO | PE1B3 | | 52.00 | | | | | | | | | |
| | | Physical Collocation - Virtual to Physical Collocation In-Place, Per Voice Grade Circuit | I | | CLO | PE1BR | | 23.00 | | | | | | | | | |
| | | Physical Collocation Virtual to Physical Collocation In-Place, Per DSO Circuit | I | | CLO | PE1BP | | 23.00 | | | | | | | | | |
| | | Physical Collocation - Virtual to Physical Collocation In-Place, Per DS1 Circuit | I | | CLO | PE1BS | | 33.00 | | | | | | | | | |
| | | Physical Collocation - Virtual to Physical Collocation In-Place, per DS3 Circuit | I | | CLO | PE1BE | | 37.00 | | | | | | | | | |
| | | Physical Collocation - Virtual to Physical Collocation In-Place/Relocation, space cable facilities assigned to Collocation Space, per 700 cable pairs or fraction thereof | I | | CLO | PE1B7 | | 592.00 | | | | | | | | | |
| | | Physical Caged Collocation-App Cost(initial & sub)-Planning, per request | | | CLO | PE1AC | 16.16 | 2,903.66 | | | | | | | | | |
| | | Physical Caged Collocation-Space Prep-Grounding, per location | | | CLO | PE1BB | 4.32 | | | | | | | | | | |
| | | Physical Collocation, Caged Collocation - Space Prep-Power Cable, 40 AMP, includes 20 AMP A and B Feed | | | CLO | PE1SN | | 142.40 | | | | | | | | | |
| | | Physical Collocation, Caged Collocation - Space Prep-Power Cable, 100 AMP, includes 50 AMP A and B Feed | | | CLO | PE1SO | | 185.72 | | | | | | | | | |
| | | Physical Collocation, Caged Collocation - Space Prep-Power Cable, 200 AMP, includes 100 AMP A and B Feed | | | CLO | PE1SP | | 242.05 | | | | | | | | | |
| | | Physical Caged Collocation-Space Enclosure-Cage Preparation, per first 100 sq. ft. | | | CLO | PE1S1 | 110.97 | | | | | | | | | | |
| | | Phycical Caged Collocation-Space Enclosure-Cage Preparation2, per add'l 50 sq. ft. | | | CLO | PE1S5 | 55.49 | | | | | | | | | | |
| | | Physical Caged collocation-Cable Installation-Entrance Fiber Structure, interduct per ft. | | | CLO | PE1CP | 0.0156 | | | | | | | | | | |
| | | Phycical Caged Collocation-Cable Installation-Entrance Fiber, per cable | | | CLO | PE1CQ | 2.56 | 944.27 | | | | | | | | | |
| | | Physical Caged Collocation-Floor Space-Land & Buildings, per sq. ft. | | | CLO | PE1FS | 5.94 | | | | | | | | | | |
| | | Physical Caged Collocation-Cable Support Structure-Cable Racking, per entrance cable | | | CLO | PE1CS | 21.47 | | | | | | | | | | |
| | | Physical Caged Collocation-Power-Power Construction, per amp DC plant | | | CLO | PE1PN | 3.55 | | | | | | | | | | |
| | | Physical Caged Collocation-Power-Power Consumption,per amp AC usage | | | CLO | PE1PO | 2.03 | | | | | | | | | | |

CCCS 603 of 1253

| COLLOCATION - Tennessee | | | | | | | | | | | | | | Attachment: 4 | | Exhibit: B | |
|---|---|---|---|---|---|---|---|---|---|---|---|---|---|---|---|---|---|
| CATEGORY | | RATE ELEMENTS | Interim | Zone | BCS | USOC | RATES ($) | | | | | Svc Order Submitted Elec per LSR | Svc Order Submitted Manually per LSR | Incremental Charge - Manual Svc Order vs. Electronic-1st | Incremental Charge - Manual Svc Order vs. Electronic-Add'l | Incremental Charge - Manual Svc Order vs. Electronic-Disc 1st | Incremental Charge - Manual Svc Order vs. Electronic-Disc Add'l |
| | | | | | | | Rec | Nonrecurring | | Nonrecurring Disconnect | | OSS Rates ($) | | | | | |
| | | | | | | | | First | Add'l | First | Add'l | SOMEC | SOMAN | SOMAN | SOMAN | SOMAN | SOMAN |
| | | Physical Caged Collocation-2-wire Cross Connects-Voice Grade ckts, per ckt. | | | UE3,U1TD3, UXTD3, UXTS1, UNC3X, UNCSX, ULDD3, U1TS1,ULDS1, UNLD3 | PE12C | 0.0475 | 7.68 | | | | | | | | | |
| | | Physical Caged Collocation-4-wire Cross Connects-Voice Grade Ckts, per ckt. | | | UE3,U1TD3, UXTD3, UXTS1, UNC3X, UNCSX, ULDD3, U1TS1,ULDS1, UNLD3 | PE14C | 0.0475 | 7.68 | | | | | | | | | |
| | | Physical Caged Collocation-DS1 Cross Connects-connection to DCS, per ckt. | | | UE3,U1TD3, UXTD3, UXTS1, UNC3X, UNCSX, ULDD3, U1TS1,ULDS1, UNLD3 | PE11S | 7.68 | 41.65 | | | | | | | | | |
| | | Physical Caged Collocation-DS1 Cross Connects-Connection to DSX, per ckt. | | | UE3,U1TD3, UXTD3, UXTS1, UNC3X, UNCSX, ULDD3, U1TS1,ULDS1, UNLD3 | PE11X | 0.38 | 41.65 | | | | | | | | | |
| | | Physical Caged Collocation-DS3 Cross Connects-Connection to DCS, per ckt. | | | U1TD3, UXTD3, UXTS1, UNC3X, UNCSX, ULDD3, U1TS1,ULDS1, UNLD3 | PE13S | 53.96 | 298.03 | | | | | | | | | |
| | | Physical Caged Collocation-DS3 Cross Connects-Connection to DSX, per ckt. | | | U1TD3, UXTD3, UXTS1, UNC3X, UNCSX, ULDD3, U1TS1,ULDS1, UNLD3 | PE13X | 9.32 | 298.03 | | | | | | | | | |
| | | Physical Caged Collocation-Security Access-Access Cards, per 5 Cards | | | CLO | PE1A2 | | 76.10 | | | | | | | | | |
| | | Physical Collocation - Co-Carrier Cross Connects/Direct Connect - Fiber Cable Support Structure, per linear ft. | | | CLO | PE1ES | 0.0013 | | | | | | | | | | |
| | | Physical Collocation - Cageless - Co-Carrier Cross Connects - Fiber Cable Support Structure, per linear ft. | | | CLO | PE1ZH | 0.0031 | | | | | | | | | | |
| | | Physical Collocation - Cageless - Co-Carrier Cross Connects-Fiber Cable Support Structure, per cable | | | CLO | PE1ZK | | 555.03 | | | | | | | | | |
| | | Physical Collocation - Co-Carrier Cross Connect/Direct Connect - Copper/Coax Cable Support Structure, per lin. ft. | | | CLO | PE1DS | 0.0019 | | | | | | | | | | |
| | | Physical Collocation - Cageless - Co-Carrier Cross Connects - Copper/Coax Cable Support Structure, per linear ft. | | | CLO | PE1ZJ | 0.0045 | | | | | | | | | | |
| | | Physical Collocation - Cageless - Co-Carrier Cross Connects - Copper/Coax Cable Support Structure, per cable | | | CLO | PE1ZL | | 555.03 | | | | | | | | | |
| | | Physical Collocation - Co-Carrier Cross Connects/Direct Connect, Application Fee, per application | | | CLO | PE1DT | | 585.09 | | | | | | | | | |
| | | Physical Collocation - Copper Entrance Cable per Cable (CO manhole to vault splice) | | | CLO | PE1EA | | 1,279.91 | 42.784 | | | | | | | | |
| | | Physical Collocation - Copper Entrance Cable Installation, per 100 Pairs | | | CLO | PE1EB | | 18.13 | | | | | | | | | |
| | | Physical Collocation - Fiber Entrance Cable per Cable (CO manhole to vault splice) | | | CLO | PE1EC | | 1,084.11 | 42.784 | | | | | | | | |
| | | Physical Collocation - Fiber Entrance Cable Installation, per Fiber | | | CLO | PE1ED | | 7.252 | | | | | | | | | |

| COLLOCATION - Tennessee | | | | | | | | | | | | | Attachment: 4 | | Exhibit: B | |
|---|---|---|---|---|---|---|---|---|---|---|---|---|---|---|---|---|
| CATEGORY | RATE ELEMENTS | Interim | Zone | BCS | USOC | RATES ($) | | | | | Svc Order Submitted Elec per LSR | Svc Order Submitted Manually per LSR | Incremental Charge - Manual Svc Order vs. Electronic-1st | Incremental Charge - Manual Svc Order vs. Electronic-Add'l | Incremental Charge - Manual Svc Order vs. Electronic-Disc 1st | Incremental Charge - Manual Svc Order vs. Electronic-Disc Add'l |
| | | | | | | Rec | Nonrecurring | | Nonrecurring Disconnect | | OSS Rates ($) | | | | | |
| | | | | | | | First | Add'l | First | Add'l | SOMEC | SOMAN | SOMAN | SOMAN | SOMAN | SOMAN |
| | Physical Collocation - Co-Carrier Cross Connect/Direct Connect - Fiber Cable Support Structure, per cable | I | | CLO | PE1DU | | 555.03 | | | | | | | | | |
| | Physical Collocation - Co-Carrier Cross Connect/Direct Connect - Copper/Coax Cable Support Structure, per cable | I | | CLO | PE1DV | | 555.03 | | | | | | | | | |
| ADJACENT COLLOCATION | | | | | | | | | | | | | | | | |
| | Adjacent Collocation - Space Charge per Sq. Ft. | | | CLOAC | PE1JA | 0.0656 | | | | | | | | | | |
| | Adjacent Collocation - Electrical Facility Charge per Linear Ft. | | | CLOAC | PE1JC | 5.53 | | | | | | | | | | |
| | Adjacent Collocation - 2-Wire Cross-Connects | | | UEA,UHL,UDL,UCL | PE1P2 | 0.34 | 11.12 | 10.18 | 11.33 | 10.23 | | | 1.77 | 1.77 | 1.12 | 1.12 |
| | Adjacent Collocation - 4-Wire Cross-Connects | | | UEA,UHL,UDL,UCL | PE1P4 | 0.33 | 11.30 | 10.31 | 11.62 | 10.44 | | | 1.77 | 1.77 | 1.12 | 1.12 |
| | Adjacent Collocation - DS1 Cross-Connects | | | UEA,UHL,UDL,UCL | PE1P1 | 1.70 | 28.39 | 16.88 | 11.65 | 10.54 | | | 1.77 | 1.77 | 1.12 | 1.12 |
| | Adjacent Collocation - DS3 Cross-Connects | | | UEA,UHL,UDL,UCL | PE1P3 | 19.03 | 26.23 | 15.51 | 13.40 | 10.77 | | | 1.77 | 1.77 | 1.12 | 1.12 |
| | Adjacent Collocation - 2-Fiber Cross-Connect | | | CLOAC | PE1F2 | 3.49 | 26.23 | 15.51 | 13.41 | 10.78 | | | 1.77 | 1.77 | 1.12 | 1.12 |
| | Adjacent Collocation - 4-Fiber Cross-Connect | | | CLOAC | PE1F4 | 6.50 | 29.75 | 19.02 | 17.60 | 14.97 | | | 1.77 | 1.77 | 1.12 | 1.12 |
| | Adjacent Collocation - Application Fee | | | CLOAC | PE1JB | | 2,973.00 | | | | | | | | | |
| | Adjacent Collocation - 120V, Single Phase Standby Power Rate per AC Breaker Amp | | | CLOAC | PE1FB | 5.81 | | | | | | | | | | |
| | Adjacent Collocation - 240V, Single Phase Standby Power Rate per AC Breaker Amp | | | CLOAC | PE1FD | 11.64 | | | | | | | | | | |
| | Adjacent Collocation - 120V, Three Phase Standby Power Rate per AC Breaker Amp | | | CLOAC | PE1FE | 17.45 | | | | | | | | | | |
| | Adjacent Collocation - 277V, Three Phase Standby Power Rate per AC Breaker Amp | | | CLOAC | PE1FG | 40.30 | | | | | | | | | | |
| VIRTUAL COLLOCATION | | | | | | | | | | | | | | | | |
| | Virtual Collocation - Application Fee | | | AMTFS | EAF | | 2,633.00 | | | | | | 2.07 | 2.81 | 0.67 | 1.41 |
| | Virtual Collocation Administrative Only - Application Fee | I | | AMTFS | VE1AF | | 743.25 | | | | | | | | | |
| | Virtual Collocation - Cable Installation Cost, per cable | | | AMTFS | ESPCX | | 1,749.00 | | | | | | 2.07 | 2.81 | 0.67 | 1.41 |
| | Virtual Collocation - Floor Space, per sq. ft. | | | AMTFS | ESPVX | 3.91 | | | | | | | | | | |
| | Virtual Collocation - Power, per fused amp | | | AMTFS | ESPAX | 6.79 | | | | | | | | | | |
| | Virtual Collocation - Cable Support Structure, per entrance cable | | | AMTFS | ESPSX | 17.87 | | | | | | | | | | |
| | Virtual Collocation - 2-wire Cross Connects (loop) | | | UEANL,UEA,UDN,UDC,UAL,UHL,UCL,UEQ, UNCVX, UNCDX, UNCNX | UEAC2 | 0.57 | 11.62 | 9.90 | 10.38 | 8.66 | | | 2.07 | 2.81 | 0.67 | 1.41 |
| | Virtual Collocation - 4-wire Cross Connects (loop) | | | UEA,UHL,UCL,UDL, UAL, UDN, UNCVX, UNCDX | UEAC4 | 0.57 | 11.81 | 10.04 | 10.44 | 8.67 | | | 2.07 | 2.81 | 0.67 | 1.41 |
| | Virtual Collocation - 2-Fiber Cross Connects | | | UDL12, UDLO3, U1T48, U1T12, U1T03, ULDO3, ULD12, ULD48, UDF | CNC2F | 3.03 | 41.56 | 29.82 | 12.96 | 10.34 | | | 2.69 | 2.69 | 1.56 | 1.56 |
| | Virtual Collocation - 4-Fiber Cross Connects | | | UDL12, UDLO3, U1T48, U1T12, U1T03, ULDO3, ULD12, ULD48, UDF | CNC4F | 6.06 | 50.53 | 38.78 | 16.97 | 14.35 | | | 2.69 | 2.69 | 1.56 | 1.56 |
| | Virtual collocation - Special Access & UNE, cross-connect per DS1 | | | USL,ULC,ULR, UXTD1, UNC1X, ULDD1, U1TD1, USLEL, UNLD1, UEPEX, UEPDX | CNC1X | 1.32 | 32.22 | 17.76 | 10.46 | 8.75 | | | 2.07 | 2.81 | 0.67 | 1.41 |
| | Virtual collocation - Special Acess & UNE, cross-connect per DS3 | | | USL,UE3, U1TD3, UXTS1, UXTD3, UNC3X, UNCSX, ULDD3, U1TS1, ULDS1, UDLSX, UNLD3 | CND3X | 12.32 | 29.97 | 16.30 | 12.03 | 8.99 | | | 2.07 | 2.81 | 0.67 | 1.41 |

CCCS 605 of 1253

| COLLOCATION - Tennessee | | | | | | | | | | | | | | Attachment: 4 | | Exhibit: B | |
|---|---|---|---|---|---|---|---|---|---|---|---|---|---|---|---|---|---|
| CATEGORY | | RATE ELEMENTS | Interim | Zone | BCS | USOC | RATES ($) | | | | | Svc Order Submitted Elec per LSR | Svc Order Submitted Manually per LSR | Incremental Charge - Manual Svc Order vs. Electronic-1st | Incremental Charge - Manual Svc Order vs. Electronic-Add'l | Incremental Charge - Manual Svc Order vs. Electronic-Disc 1st | Incremental Charge - Manual Svc Order vs. Electronic-Disc Add'l |
| | | | | | | | Rec | Nonrecurring | | Nonrecurring Disconnect | | OSS Rates ($) | | | | | |
| | | | | | | | | First | Add'l | First | Add'l | SOMEC | SOMAN | SOMAN | SOMAN | SOMAN | SOMAN |
| | | Virtual Collocation - Co-Carrier Cross Connects - Fiber Cable Support Structure, per linear foot | | | AMTFS | VE1CB | 0.0031 | | | | | | | | | | |
| | | Virtual Collocation - Co-Carrier Cross Connects - Copper/Coax Cable Support Structure, per linear ft | | | AMTFS | VE1CD | 0.0045 | | | | | | | | | | |
| | | Virtual Collocation - Co-Carrier Cross Connects - Fiber Cable Support Structure,per cable | | | AMTFS | VE1CC | | 555.03 | | | | | | 2.07 | 2.81 | 0.67 | 1.41 |
| | | Virtual Collocation - Co-Carrier Cross Connects - Copper/Coax Cable Support Structure, per cable | | | AMTFS | VE1CE | | 555.03 | | | | | | 2.07 | 2.81 | 0.67 | 1.41 |
| | | Virtual Collocation Cable Records - per request | | | AMTFS | VE1BA | | 1,711.00 | | | | | | | | | |
| | | Virtual Collocation Cable Records - VG/DS0 Cable, per cable record | | | AMTFS | VE1BB | | 925.06 | | | | | | | | | |
| | | Virtual Collocation Cable Records - VG/DS0 Cable, per each 100 pair | | | AMTFS | VE1BC | | 18.05 | | | | | | | | | |
| | | Virtual Collocation Cable Records - DS1, per T1TIE | | | AMTFS | VE1BD | | 8.45 | | | | | | | | | |
| | | Virtual Collocation Cable Records - DS3, per T3TIE | | | AMTFS | VE1BE | | 29.57 | | | | | | | | | |
| | | Virtual Collocation Cable Records - Fiber Cable, per 99 fiber records | | | AMTFS | VE1BF | | 279.42 | | | | | | | | | |
| | | Virtual collocation - Security Escort - Basic, per half hour | | | AMTFS | SPTBX | | 33.15 | | | | | | 2.07 | 2.81 | 0.67 | 1.41 |
| | | Virtual collocation - Security Escort - Overtime, per half hour | | | AMTFS | SPTOX | | 41.50 | | | | | | 2.07 | 2.81 | 0.67 | 1.41 |
| | | Virtual collocation - Security Escort - Premium, per half hour | | | AMTFS | SPTPX | | 49.86 | | | | | | 2.07 | 2.81 | 0.67 | 1.41 |
| | | Virtual collocation - Maintenance in CO - Basic, per half hour | | | AMTFS | CTRLX | | 30.64 | | | | | | 2.07 | 2.81 | 0.67 | 1.41 |
| | | Virtual collocation - Maintenance in CO - Overtime, per half hour | | | AMTFS | SPTOM | | 35.77 | | | | | | 2.07 | 2.81 | 0.67 | 1.41 |
| | | Virtual collocation - Maintenance in CO - Premium per half hour | | | AMTFS | SPTPM | | 40.90 | | | | | | 2.07 | 2.81 | 0.67 | 1.41 |
| | | Virtual Collocation - Request Resend of CFA Information, per CLLI | | | AMTFS | VE1QR | | 77.67 | | | | | | | | | |

# Attachment 5

## Access to Numbers and Number Portability

## TABLE OF CONTENTS

1. NON-DISCRIMINATORY ACCESS TO TELEPHONE NUMBERS..... 3

2. LOCAL SERVICE PROVIDER NUMBER PORTABILITY - PERMANENT SOLUTION (LNP)..... 4

3. OPERATIONAL SUPPORT SYSTEM (OSS) RATES ..... 5

## ACCESS TO NUMBERS AND NUMBER PORTABILITY

### 1. NON-DISCRIMINATORY ACCESS TO TELEPHONE NUMBERS

1.1 During the term of this Agreement, where Level 3 is utilizing its own switch, Level 3 shall contact the North American Numbering Plan Administrator (NANPA), or, where applicable, the relevant Number Pool Administrator for the assignment of numbering resources.

1.2 Where BellSouth provides local switching or resold services to Level 3, BellSouth will provide Level 3 with online access to available telephone numbers as defined by applicable FCC rules and regulations on a first come first served basis. Level 3 acknowledges that such access to numbers shall be in accordance with the appropriate FCC rules and regulations. Level 3 may designate up to a forecasted six (6) months supply of available numbers as intermediate (an available number provided to Level 3) telephone numbers per rate center if the following conditions are met:

1.2.1 Level 3 must: (1) indicate that all of the intermediate numbers currently held by Level 3 in each rate center where Level 3 will be requesting intermediate telephone numbers have six (6) or less months to exhaust; (2) supply projected monthly telephone number demand on a rate center basis for the coming twelve (12) months for each rate center where Level 3 will be requesting intermediate telephone numbers; and, (3) demonstrate that the utilization level on current intermediate numbers held by Level 3 in the rate center where Level 3 is requesting telephone numbers has reached at least 70%. The above information will be provided by Level 3 by submitting to BellSouth a fully completed "CO Code Assignments Months To Exhaust Certification Worksheet – TN Level" ("MTE Worksheet"), Appendix B to the Central Office Code (NXX) Assignments Guidelines, INC 95-0407-008 for each rate center where Level 3 will be requesting intermediate telephone numbers. The utilization level is calculated by dividing all intermediate numbers currently assigned by Level 3 to End Users by the total number of intermediate numbers held by Level 3 in the rate center and multiplying the result by one hundred (100). After June 30, 2004, rate center utilization level must be at 75% (Part F of the MTE Worksheet).

1.2.2 If fulfilling Level 3's request for intermediate numbers results in BellSouth having to submit a request for additional telephone numbers to a national numbering administrator (either NANPA CO Code Administration or NeuStar Pooling Administration or their successors), BellSouth will submit the required numbering request to the national numbering administrator to satisfy Level 3's request for intermediate numbers. BellSouth will also pursue all appropriate steps (including submitting a safety valve request (petition) to the appropriate Commission if the numbering request is denied by the national administrator) to satisfy Level 3's

request for intermediate numbers. In these cases, BellSouth is not obligated to fulfill the request by Level 3 for intermediate numbers unless, and until, BellSouth's request for additional numbering resources is granted.

1.2.3 Level 3 agrees to supply supporting information for any numbering request and/or safety valve request that BellSouth files pursuant to Section 1.2.2 above.

1.3 Level 3 acknowledges that there may be instances where there is an industry shortage of available telephone numbers in a NPA. These instances occur where a jeopardy status has been declared by NANPA and the industry has determined that limiting the assignment of new numbers is the appropriate method to employ until the jeopardy can be alleviated. In such NPA jeopardy situations where assignment of new numbers is restricted as per the jeopardy guidelines developed by the industry, BellSouth may request that Level 3 cancel all or a portion of its unassigned intermediate numbers. Level 3 consent to BellSouth's request shall not be unreasonably withheld.

## 2. LOCAL SERVICE PROVIDER NUMBER PORTABILITY - PERMANENT SOLUTION (LNP)

2.1 The Parties will offer Number Portability in accordance with rules, regulations and guidelines adopted by the Commission, the FCC and industry fora.

2.2 End User Line Charge. Where Level 3 subscribes to BellSouth's local switching, BellSouth shall bill and Level 3 shall pay the end user line charge associated with implementing LNP as set forth in BellSouth's FCC Tariff No. 1. This charge is not subject to the resale discount set forth in Attachment 1 of this Agreement.

2.3 SMS Administration. The Parties will work cooperatively with other local service providers to establish and maintain contracts for the LNP Service Management System (SMS).

2.4 Network Architecture. The parties agree to adhere to applicable FCC Rules and Orders governing LNP network architecture.

2.5 Signaling. In connection with LNP, each Party agrees to use SS7 signaling in accordance with applicable FCC Rules and Orders.

2.6 N-1 Query. The parties agree to adhere to applicable FCC Rules and Orders governing LNP N-1 queries.

2.7 Porting of Reserved Numbers and Suspended Lines. Customers of each Party may port numbers, via LNP, that are in a denied state or that are on suspend status. In addition, Customers of each Party may port reserved numbers that the Customer has paid to reserve. Portable reserved numbers are identified on the Customer Service Record (CSR). In anticipation of porting from one Party to the other Party, a Party's subscriber may reserve additional telephone numbers and include

them with the numbers that are subsequently ported to the other Party. It is not necessary to restore a denied number before it is ported.

2.8 Splitting of Number Groups. If blocks of subscriber numbers (including, but not limited to, Direct Inward Dial (DID) numbers and MultiServ groups) are split in connection with an LNP request, the Parties shall permit such splitting. BellSouth and Level 3 shall offer number portability to customers for any portion of an existing block of DID numbers without being required to port the entire block of numbers. BellSouth and Level 3 shall permit end-users who port a portion of DID numbers to retain DID service on the remaining portion of numbers. If a Party requests porting a range of DID numbers smaller than a whole block, that Party shall pay the applicable charges for doing so as set forth in Attachment 2 of this Agreement. In the event a rate is not available then the Parties shall negotiate a rate for such services.

2.9 The Parties will set LRN unconditional or 10-digit triggers where applicable. Where triggers are set, the porting Party will remove the ported number at the same time the trigger is removed.

2.10 A trigger order is a service order issued in advance of the porting of a number. A trigger order 1) initiates call queries to the AIN SS7 network in advance of the number being ported, and 2) provides for the new service provider to be in control of when a number ports.

2.11 Where triggers are not set, the Parties shall coordinate the porting of the number between service providers so as to minimize service interruptions to the End User.

2.12 BellSouth and Level 3 will work cooperatively to implement changes to LNP process flows ordered by the FCC or as recommended by standard industry forums addressing LNP.

## 3. OPERATIONAL SUPPORT SYSTEM (OSS) RATES

3.1 The terms, conditions and rates for OSS are as set forth in Attachments 1 and 2.

# Attachment 6

# Pre-Ordering, Ordering, Provisioning, Maintenance and Repair

## TABLE OF CONTENTS

1. QUALITY OF PRE-ORDERING, ORDERING, PROVISIONING, MAINTENANCE AND REPAIR ... 3

2. ACCESS TO OPERATIONS SUPPORT SYSTEMS ... 3

3. MISCELLANEOUS ... 5

## PRE-ORDERING, ORDERING, PROVISIONING, MAINTENANCE AND REPAIR

### 1. QUALITY OF PRE-ORDERING, ORDERING, PROVISIONING, MAINTENANCE AND REPAIR

1.1 BellSouth shall provide to Level 3 nondiscriminatory access to its Operations Support Systems (OSS) and the necessary information contained therein in order that Level 3 can perform the functions of pre-ordering, ordering, provisioning, maintenance and repair, and billing. BellSouth shall provide Level 3 with all relevant documentation (manuals, user guides, specifications, etc.) regarding business rules and other formatting information as well as practices and procedures necessary to ensure requests are efficiently processed. All documentation will be readily accessible at BellSouth's interconnection website and are incorporated herein by reference. BellSouth shall ensure that its OSS are designed to accommodate access requests for both current and projected demand of Level 3 and other CLECs in the aggregate.

1.2 BellSouth shall provision services during its regular working hours, as provided at BellSouth's interconnection website. To the extent Level 3 requests provisioning of service to be performed outside BellSouth's regular working hours, or the work so requested requires BellSouth's technicians or Project Manager to work outside of regular working hours, overtime charges shall apply. Notwithstanding the foregoing, if such work is performed outside of regular working hours by a BellSouth technician or Project Manager during his or her scheduled shift and BellSouth does not incur any overtime charges in performing the work on behalf of Level 3, BellSouth will not assess Level 3 additional charges beyond the rates and charges specified in this Agreement.

### 2. ACCESS TO OPERATIONS SUPPORT SYSTEMS

2.1 BellSouth shall provide Level 3 nondiscriminatory access to its OSS and the necessary information contained therein in order that Level 3 can perform the functions of pre-ordering, ordering, provisioning, maintenance and repair, and billing. BellSouth shall provide nondiscriminatory access to the OSS through manual and/or electronic interfaces as described in this Attachment. It is the sole responsibility of Level 3 to obtain the technical capability to access and utilize BellSouth's OSS interfaces. Specifications for Level 3's access and use of BellSouth's electronic interfaces are set forth at BellSouth's interconnection website and are incorporated herein by reference.

2.1.1 Pre-Ordering BellSouth will provide electronic access to its OSS and the information contained therein in order that Level 3 can perform the following pre-ordering functions: service address validation, telephone number selection, service and feature availability, due date information, customer record information and loop makeup information. Mechanized access is provided by electronic interfaces

whose specifications for access and use are set forth at BellSouth's interconnection website and are incorporated herein by reference. The process by which BellSouth and Level 3 will manage these electronic interfaces to include the development and introduction of new interfaces will be governed by the change management process as described below. Level 3 shall provide to BellSouth access to customer record information, including circuit numbers associated with each telephone number where applicable. Level 3 shall provide such information within four (4) hours after request via electronic access where available. If electronic access is not available, Level 3 shall provide to BellSouth paper copies of customer record information, including circuit numbers associated with each telephone number where applicable. If BellSouth requests the information before noon, the customer record information shall be provided the same day. If BellSouth requests the information after noon, the customer record information shall be provided by noon the following day.

2.1.2 The Parties agree not to view, copy, or otherwise obtain access to the customer record information of any customer without that customer's permission. Level 3 will obtain access to customer record information only in strict compliance with applicable laws, rules, or regulations of the state in which the service is provided. BellSouth reserves the right to audit Level 3's access to customer record information. If a BellSouth audit of Level 3's access to customer record information reveals that Level 3 is accessing customer record information without having obtained the proper End User authorization, BellSouth upon reasonable notice to Level 3 may take corrective action, including but not limited to suspending or terminating Level 3's electronic access to BellSouth's OSS functionality. All such information obtained through an audit shall be deemed Information covered by the Proprietary and Confidential Information section in the General Terms and Conditions of this Agreement.

2.1.3 Ordering BellSouth will make available to Level 3 electronic interfaces for the purpose of exchanging order information, including order status and completion notification, for non-complex and certain complex resale requests and certain network elements. Specifications for access and use of BellSouth's electronic interfaces are set forth at BellSouth's interconnection website and are incorporated herein by reference. The process by which BellSouth and Level 3 will manage these electronic interfaces to include the development and introduction of new interfaces will be governed by the change management process as described below.

2.1.4 Maintenance and Repair BellSouth will make available to Level 3 electronic interfaces for the purpose of reporting and monitoring service troubles. Specifications for access and use of BellSouth's maintenance and repair electronic interfaces are set forth at BellSouth's interconnection website and are incorporated herein by reference. The process by which BellSouth and Level 3 will manage these electronic interfaces to include the development and introduction of new interfaces will be governed by the change management process as described below. Requests for trouble repair are billed in accordance with the provisions of this Agreement. BellSouth and Level 3 agree to adhere to BellSouth's Operational

Understanding, as amended from time to time during this Agreement and as incorporated herein by reference. The Operational Understanding may be accessed via BellSouth's interconnection website.

2.2 Change Management. BellSouth provides a collaborative process for change management of the electronic interfaces through the Change Control Process (CCP). Guidelines for this process are set forth in the CCP document as amended from time to time during this Agreement. The CCP document may be accessed via the Internet at http://www.interconnection.bellsouth.com.

2.3 BellSouth's Versioning Policy for Electronic Interfaces BellSouth's Versioning Policy is part of the Change Control Process (CCP). Pursuant to the CCP, BellSouth will issue new software releases for new industry standards for its EDI and TAG electronic interfaces. The Versioning Policy, including the appropriate notification to Level 3, is set forth in the CCP document as amended from time to time during this Agreement. The CCP document may be accessed via the Internet at http://www.interconnection.bellsouth.com.

2.4 Rates Charges for use of OSS shall be as set forth in this Agreement.

**3. MISCELLANEOUS**

3.1 Pending Orders Orders placed in the hold or pending status by Level 3 will be held for a maximum of thirty (30) days from the date the order is placed on hold. After such time, Level 3 shall be required to submit a new service request. Incorrect or invalid requests returned to Level 3 for correction or clarification will be held for thirty (30) days. If Level 3 does not return a corrected request within thirty (30) days, BellSouth will cancel the request.

3.2 Single Point of Contact Level 3 will be the single point of contact with BellSouth for ordering activity for network elements and other services used by Level 3 to provide services to its End Users, except that BellSouth may accept a request directly from another CLEC, or BellSouth, acting with authorization of the affected End User. Level 3 and BellSouth shall each execute a blanket letter of authorization with respect to customer requests so that prior proof of end-user authorization will not be necessary with every request (except in the case of a local service freeze). The Parties shall each be entitled to adopt their own internal processes for verification of customer authorization for requests, provided, however, that such processes shall comply with applicable state and federal law and industry and regulatory guidelines. Pursuant to a request from another carrier, BellSouth may disconnect any network element being used by Level 3 to provide service to that End User and may reuse such network elements or facilities to enable such other carrier to provide service to the End User. BellSouth will notify Level 3 that such a request has been processed but will not be required to notify Level 3 in advance of such processing.

3.2.1 Neither BellSouth nor Level 3 shall prevent or delay an end-user from migrating to another carrier because of unpaid bills, denied service, or contract terms.

3.2.2 After obtaining the CSR under the process described in Sections 2.1.1 and 2.1.2 above, the acquiring carrier submits a Local Service Request (LSR) to the existing carrier in accordance with the existing carrier's requirements for LSRs. As appropriate, BellSouth will return to Level 3 a Firm Order Confirmation (FOC) or a rejection/clarification within the intervals as specified per the Service Quality Measurement (SQM) set forth in Attachment 9 of this Agreement. Level 3 shall return a FOC to BellSouth within thirty-six (36) hours after Level 3's receipt from BellSouth of a valid LSR. Level 3 shall provide a reject response to BellSouth within twenty-four (24) hours after BellSouth's submission of an LSR which is incomplete or incorrectly formatted.

3.3 Use of Facilities When a customer of Level 3 elects to discontinue service and to transfer service to another local exchange carrier, including BellSouth, BellSouth shall have the right to reuse the facilities provided to Level 3 by BellSouth. In addition, where BellSouth provides local switching, BellSouth may disconnect and reuse facilities when the facility is in a denied state and BellSouth has received a request to establish new service or transfer of service from a customer or a customer's CLEC at the same address served by the denied facility. BellSouth will notify Level 3 that such a request has been processed after the disconnect order has been completed.

3.4 Contact Numbers. The Parties agree to provide one another with toll-free nation-wide (50 states) contact numbers for the purpose of ordering, provisioning and maintenance of services.

3.5 Subscription Functions In cases where BellSouth performs subscription functions for an interexchange carrier (IXC) (i.e. PIC and LPIC changes via Customer Account Record Exchange (CARE)), BellSouth will provide the affected IXCs with the Operating Company Number (OCN) of the local provider for the purpose of obtaining end user billing account and other end user information required under subscription requirements.

3.6 Cancellation Charges If Level 3 cancels a request for network elements or resold services, any costs incurred by BellSouth in conjunction with the provisioning of that request will be recovered in accordance with BellSouth's Private Line Tariff or BellSouth's FCC No. 1 Tariff, Section 5.4, as applicable. Notwithstanding the foregoing, if Level 3 places an LSR based upon BellSouth's loop makeup information, and such information is inaccurate resulting in the inability of BellSouth to provision the network elements requested and another spare compatible facility cannot be found with the transmission characteristics of the network elements originally requested, cancellation charges described in this Section shall not apply. Where Level 3 places a single LSR for multiple network elements or services based upon loop makeup information, and information as to some, but not all, of the network elements or services is inaccurate, if BellSouth

cannot provision the network elements or services that were the subject of the inaccurate loop makeup information, Level 3 may cancel its request for those network elements or services without incurring cancellation charges as described in this Section. In such instance, should Level 3 elect to cancel the entire LSR, cancellation charges as described in this Section shall apply to those elements and services that were not the subject of inaccurate loop makeup provided that BellSouth processed the LSR in accordance with Section 2 of this Attachment.

3.7 Service Date Advancement Charges (a.k.a. Expedites). For Service Date Advancement requests by Level 3, Service Date Advancement charges will apply for intervals less than the standard interval as outlined in the BellSouth Product and Services Interval Guide. The charges as outlined in BellSouth's FCC No. 1 Tariff, Section 5, will apply as applicable.

# Attachment 7

# Billing

## TABLE OF CONTENTS

1. PAYMENT AND BILLING ARRANGEMENTS ..... 3

2. BILLING DISPUTES ..... 7

3. RAO HOSTING ..... 8

4. OPTIONAL DAILY USAGE FILE ..... 11

5. ACCESS DAILY USAGE FILE ..... 14

6. ENHANCED OPTIONAL DAILY USAGE FILE (EODUF) ..... 16

Rates ..... Exhibit A

# BILLING

## 1. PAYMENT AND BILLING ARRANGEMENTS

The terms and conditions set forth in this Attachment shall apply to all services ordered and provisioned pursuant to this Agreement.

1.1 Billing. BellSouth will bill through the Carrier Access Billing System (CABS), Integrated Billing System (IBS) and/or the Customer Records Information System (CRIS) depending on the particular service(s) provided to Level 3 under this Agreement. BellSouth will format all bills in Carrier Billing Output Specification (CBOS) Standard or CLUB/EDI format, depending on the type of service provided. For those services where standards have not yet been developed, BellSouth's billing format will change as necessary when standards are finalized by the applicable industry forum.

1.1.1 For any service(s) BellSouth receives from Level 3, Level 3 shall bill BellSouth in CBOS format. For those services where standards have not yet been developed, Level 3's billing format will change as necessary when standards are finalized by the applicable industry forum.

1.1.2 Any switched access charges associated with interexchange carrier access to the resold local exchange lines will be billed by, and due to BellSouth.

1.1.3 BellSouth will render bills each month on established bill days for each of Level 3's accounts. If either Party requests multiple billing media or additional copies of the bills, the billing Party will provide these at the appropriate tariff rate.

1.1.4 BellSouth will bill Level 3 in advance for all services to be provided during the ensuing billing period except charges associated with service usage and nonrecurring charges, which will be billed in arrears.

1.1.4.1 Charges for services will be calculated on an individual End User account level, including, if applicable, any charge for usage or usage allowances. BellSouth will also bill Level 3, and Level 3 will be responsible for and remit to BellSouth, all charges applicable to said services including but not limited to 911 and E911 charges, End Users common line charges, federal subscriber line charges, telecommunications relay charges (TRS), and franchise fees, unless otherwise ordered by a Commission.

1.1.5 BellSouth will not perform billing and collection services for Level 3 as a result of the execution of this Agreement.

1.1.6 In the event that this Agreement or an amendment to this Agreement effects a rate change to recurring rate elements that are billed in advance, BellSouth will make an adjustment to such recurring rates billed in advance at the previously effective

rate. The adjustment shall reflect billing at the new rates from the Effective Date of the Agreement or amendment.

1.2 Establishing Accounts. After submitting a credit profile and deposit, if required, and after receiving certification as a local exchange carrier from the appropriate regulatory agency, Level 3 will provide the appropriate BellSouth advisory team/local contract manager the necessary documentation to enable BellSouth to establish accounts for Local Interconnection, Network Elements and Other Services, Collocation and/or resold services. Such documentation shall include the Application for Master Account, if applicable, proof of authority to provide telecommunications services, the appropriate Operating Company Numbers (OCN) for each state as assigned by the National Exchange Carriers Association (NECA), Carrier Identification Code (CIC), Access Customer Name and Abbreviation (ACNA), Blanket Letter of Authorization (LOA), Misdirected Number form, and a tax exemption certificate, if applicable.

If Level 3 established a Master Account with BellSouth under a prior interconnection agreement and will use that Master Account information (and no other), this section shall not apply

Notwithstanding anything to the contrary in this Agreement, Level 3 may not order services under a new account established in accordance with this Section 1.2 until 30 days after all information specified in this Section 1.2 is received from Level 3.

1.2.1 OCN. If Level 3 needs to change its OCN(s) under which it operates when Level 3 has already been conducting business utilizing those OCN(s), Level 3 shall bear all costs incurred by BellSouth to convert Level 3 to the new OCN(s). OCN conversion charges include all time required to make system updates to all of Level 3's End User customer records and will be handled by the BFR/NBR process.

1.2.2 Payment Responsibility. Except as provided in section 2 herein, Payment of all charges will be the responsibility of Level 3. Level 3 shall make payment to BellSouth for all services billed. Payments made by Level 3 to BellSouth as payment on account will be credited to Level 3's accounts receivable master account. BellSouth will not become involved in billing disputes that may arise between Level 3 and Level 3's customer.

1.3 Payment Due. Payment for services provided is due on or before the next bill date in immediately available funds. Payment is considered to have been made when received by BellSouth.

1.4 Due Dates. If the payment due date falls on a Sunday or on a holiday that is observed on a Monday, the payment due date shall be the first non-holiday day following such Sunday or holiday. If the payment due date falls on a Saturday or on a holiday which is observed on Tuesday, Wednesday, Thursday, or Friday, the payment due date shall be the last non-holiday day preceding such Saturday or

holiday. If payment is not received by the payment due date, a late payment charge, as set forth in Section 1.6, below, shall apply.

1.5 Tax Exemption. Upon BellSouth's receipt of tax exemption certificate, the total amount billed to Level 3 will not include those taxes or fees from which Level 3 is exempt. Level 3 will be solely responsible for the computation, tracking, reporting and payment of all taxes and like fees associated with the services provided to the End User of Level 3.

1.6 Late Payment. If any portion of the payment is not received by BellSouth on or before the payment due date as set forth preceding, or if any portion of the payment is received by BellSouth in funds that are not immediately available to BellSouth, then a late payment charge shall be due to BellSouth. The late payment charge shall be calculated by multiplying the portion of the payment not received by the payment due date by a late factor and will be applied on a per bill basis. The late factor shall be as set forth in Section A2 of the General Subscriber Services Tariff, Section B2 of the Private Line Service Tariff or Section E2 of the Intrastate Access Tariff, as appropriate. In addition to any applicable late payment charges, Level 3 may be charged a fee for all returned checks as set forth in Section A2 of the General Subscriber Services Tariff or pursuant to the applicable state law.

1.7 Discontinuing Service to Level 3. The procedures for discontinuing service to Level 3 are as follows:

1.7.1 BellSouth reserves the right to suspend or possibly terminate service to Level 3 without notification to Level 3 in the event of immediate threat to the BellSouth or Level 3 facilities or services, illegal activity, or harmful or abusive use of BellSouth facilities or services. In the event of any other violation or noncompliance by Level 3 of the rules and regulations of BellSouth's tariffs, BellSouth must provide seven (7) days written notice prior to suspension or termination of service. If Level 3 should cure the alleged violation within the applicable notice time frame, BellSouth shall not suspend or terminate service.

1.7.2 BellSouth reserves the right to suspend or terminate service for nonpayment of undisputed amounts. If payment of amounts not subject to a billing dispute, as described in Section 2, is not received by the bill date in the month after the original bill date, BellSouth will provide written notice to Level 3 that additional applications for service may be refused, that any pending orders for service may not be completed, and/or that access to ordering systems may be suspended if payment of such amounts, and all other amounts not in dispute that become past due before refusal, incompletion or suspension, is not received by the fifteenth day following the date of the notice. In addition, BellSouth will provide written notice to the person designated by Level 3 to receive notices of noncompliance that BellSouth may discontinue the provision of existing services to Level 3 if payment of such amounts, and all other amounts not in dispute that become past due before

discontinuance, is not received by the thirtieth day following the date of the initial notice. BellSouth may provide all written notices at the same time.

1.7.3 In the case of discontinuance of services, all billed charges, as well as applicable termination charges, shall become due.

1.7.4 Discontinuance of service on Level 3's account will effect a discontinuance of service to Level 3's End Users. BellSouth will reestablish service for Level 3 upon payment of all past due charges and the appropriate connection fee subject to BellSouth's normal application procedures. Level 3 is solely responsible for notifying the End User of the discontinuance of the service. If within fifteen (15) days after Level 3's service has been discontinued and no arrangements to reestablish service have been made consistent with this subsection, Level 3's service will be disconnected.

1.8 Deposit Policy.

1.8.1 Level 3 shall complete the BellSouth Credit Profile and provide information to BellSouth regarding credit worthiness, unless satisfactory credit has already been established. Based on the results of any BellSouth credit analysis, BellSouth reserves the right to secure the account with a suitable form of security deposit.

1.8.2 Such security deposit shall take the form of cash, an Irrevocable Letter of Credit (BellSouth form), Surety Bond (BellSouth form) or, in BellSouth's sole discretion, some other form of security proposed by Level 3. Any such security deposit shall in no way release Level 3 from its obligation to make complete and timely payments of its bill.

1.8.3 Level 3 shall pay any applicable deposits prior to the inauguration of service. To the extent not required as of the effective date of this agreement, Level 3 shall not be required to furnish a security deposit or letter of credit to BellSouth absent an adverse material change in financial circumstances would so warrant and/or gross monthly billing has increased substantially beyond the level initially used to determine the level of security deposit, BellSouth reserves the right to request additional security and/or file a Uniform Commercial Code (UCC-1) security interest in Level 3's "accounts receivables and proceeds." Interest on a security deposit, if provided in cash, shall accrue and be paid in accordance with the terms in the appropriate BellSouth tariff.

1.8.4 Security deposits collected under this Section shall not exceed two months' estimated billing.

1.8.5 In the event Level 3 fails to remit to BellSouth any deposit requested pursuant to this Section, service to Level 3 may be terminated in accordance with the terms of Section 1.7 of this Attachment, and any security deposits will be applied to Level 3's account(s). In the event Level 3 defaults on its account, service to Level 3 will be terminated in accordance with the terms of Section 1.7 and any security deposits will be applied to Level 3's account.

1.9 Notices. Notwithstanding anything to the contrary in this Agreement, all bills and notices regarding billing matters, including notices relating to security deposits, disconnection of services for nonpayment of charges, and rejection of additional orders from Level 3, shall be forwarded to the individual and/or address provided by Level 3 in establishment of its billing account(s) with BellSouth, or to the individual and/or address subsequently provided by Level 3 as the contact for billing information. All monthly bills and notices described in this Section shall be forwarded to the same individual and/or address; provided, however, upon written request from Level 3 to BellSouth's billing organization, the notice of discontinuance of services purchased by Level 3 under this Agreement provided for in Section 1.7.2 of this Attachment shall be sent via certified mail to the individual(s) listed in the Notices provision of the General Terms and Conditions of this Agreement.

1.10 Rates. Rates for Optional Daily Usage File (ODUF), Access Daily Usage File (ADUF), Enhanced Optional Daily Usage File (EODUF) and Centralized Message Distribution Service (CMDS) are set out in Exhibit A to this Attachment. If no rate is identified in this Attachment, the rate for the specific service or function will be as set forth in the applicable BellSouth tariff or as negotiated by the Parties upon request by either Party.

## 2. BILLING DISPUTES

2.1 Each Party agrees to notify the other Party in writing upon the discovery of a billing dispute. Level 3 shall report all billing disputes to BellSouth using the Billing Adjustment Request Form (RF 1461) provided by BellSouth. In the event of a billing dispute, the Parties will endeavor to resolve the dispute within sixty (60) calendar days of the notification date. If the Parties are unable within the 60 day period to reach resolution, then the aggrieved Party may pursue dispute resolution in accordance with the General Terms and Conditions of this Agreement.

2.2 For purposes of this Section 2, a billing dispute means a reported dispute of a specific amount of money actually billed by either Party. The dispute must be clearly explained by the disputing Party in good faith, and supported by written documentation as set forth in Section 2.1 above, which clearly shows the basis for disputing charges. A billing dispute will not include the refusal to pay all or part of a bill or bills when no written documentation is provided to support the dispute,

nor shall a billing dispute include the refusal to pay other undisputed amounts owed by the billed Party until the dispute is resolved. Level 3 may withhold disputed amounts until the dispute is resolved. Claims by the billed Party for damages of any kind will not be considered a billing dispute for purposes of this Section. If the billing dispute is resolved ultimately in favor of the billing Party, the disputing Party will make immediate payment of any of the disputed amount owed to the billing Party or the billing Party shall have the right to pursue normal treatment procedures. Any credits due to the disputing Party, pursuant to the billing dispute and including any late payments applied to the disputed amounts, will be applied to the disputing Party's account by the billing Party immediately upon resolution of the dispute in accordance with this section 2. In the event the billing dispute is ultimately resolved in favor of the disputing party, the disputing Party shall not be liable for any of the disputed amounts or any of the associated late payments

2.3 If a Party disputes a charge and does not pay such charge by the payment due date, or if a payment or any portion of a payment is received by either Party after the payment due date, or if a payment or any portion of a payment is received in funds which are not immediately available to the other Party, then a late payment charge and interest, where applicable, shall be assessed. For bills rendered by either Party for payment, the late payment charge for both Parties shall be calculated based on the portion of the payment not received by the payment due date multiplied by the late factor as set forth in the following BellSouth tariffs: for services purchased from the General Subscribers Services Tariff for purposes of resale and for ports and non-designed loops, Section A2 of the General Subscriber Services Tariff; for services purchased from the Private Line Tariff for purposes of resale, Section B2 of the Private Line Service Tariff; and for designed network elements and other services and local interconnection charges, Section E2 of the Access Service Tariff.

## 3. RAO HOSTING

3.1 RAO Hosting, Calling Card and Third Number Settlement System (CATS) and Non-Intercompany Settlement System (NICS) services provided to Level 3 by BellSouth will be in accordance with the methods and practices regularly applied by BellSouth to its own operations during the term of this Agreement, including such revisions as may be made from time to time by BellSouth.

3.2 Level 3 shall furnish all relevant information required by BellSouth for the provision of RAO Hosting, CATS and NICS.

3.3 Charges or credits, as applicable, will be applied by BellSouth to Level 3 on a monthly basis in arrears. Amounts due (excluding adjustments) are payable within thirty (30) days of receipt of the billing statement.

3.4 Level 3 must have its own unique hosted RAO code. Where BellSouth is the selected CMDS interfacing host, Level 3 must request that BellSouth establish a unique hosted RAO code for Level 3.

Such request shall be in writing to the BellSouth RAO Hosting coordinator and must be submitted at least eight (8) weeks prior to provision of services pursuant to this Section. Services shall commence on a date mutually agreed by the Parties.

3.5 BellSouth will receive messages from Level 3 that are to be processed by BellSouth, another LEC in the BellSouth region or a LEC outside the BellSouth region. Level 3 shall send all messages to BellSouth no later than sixty (60) days after the message date.

3.6 BellSouth will perform invoice sequence checking, standard EMI format editing, and balancing of message data with the EMI trailer record counts on all data received from Level 3.

3.7 All data received from Level 3 that is to be processed or billed by another LEC within the BellSouth region will be distributed to that LEC in accordance with the Agreement(s) in effect between BellSouth and the involved LEC.

3.8 All data received from Level 3 that is to be placed on the CMDS network for distribution outside the BellSouth region will be handled in accordance with the agreement(s) in effect between BellSouth and its connecting contractor.

3.9 BellSouth will receive messages from the CMDS network that are destined to be processed by Level 3 and will forward them to Level 3 on a daily basis for processing.

3.10 Transmission of message data between BellSouth and Level 3 will be via CONNECT:Direct or Secure File Transfer Protocol (FTP).

3.10.1 Data circuits (private line or dial-up) will be required between BellSouth and Level 3 for the purpose of data transmission when utilizing CONNECT:Direct. Where a dedicated line is required, Level 3 will be responsible for ordering the circuit and coordinating the installation with BellSouth. Level 3 is responsible for any charges associated with this line. Equipment required on the BellSouth end to attach the line to the mainframe computer and to transmit data will be negotiated on an individual case basis. Where a dial-up facility is required, dial circuits will be installed in the BellSouth data center by BellSouth and the associated charges assessed to Level 3. Additionally, all message toll charges associated with the use of the dial circuit by Level 3 will be the responsibility of Level 3. Associated equipment on the BellSouth end, including a modem, will be negotiated on an individual case basis between the Parties. All equipment, including modems and software, that is required on the Level 3 end for the purpose of data transmission will be the responsibility of Level 3.

3.10.2 If Level 3 utilizes Secure File Transfer Protocol for data file transmission, purchase of the Secure File Transfer Protocol software will be the responsibility of Level 3.

3.11 All messages and related data exchanged between BellSouth and Level 3 will be formatted for EMI formatted records and packed between appropriate EMI header and trailer records in accordance with accepted industry standards.

3.12 Level 3 will maintain recorded message detail necessary to recreate files provided to BellSouth for a period of three (3) calendar months beyond the related message dates.

3.13 Should it become necessary for Level 3 to send data to BellSouth more than sixty (60) days past the message date(s), Level 3 will notify BellSouth in advance of the transmission of the data. BellSouth will work with its connecting contractor and/or Level 3, where necessary, to notify all affected LECs.

3.14 In the event that data to be exchanged between the two Parties should become lost or destroyed, the Party responsible for creating the data will make every effort to restore and retransmit such data. If the data cannot be retrieved, the Party responsible for losing or destroying the data will be liable to the other Party for any resulting lost revenue. Lost revenue may be a combination of revenues that could not be billed to the End Users and associated access revenues. Both Parties will work together to estimate the revenue amount based upon historical data through a method mutually agreed upon. The resulting estimated revenue loss will be paid by the responsible Party to the other Party within three (3) calendar months of the resolution of the amount owed, or as mutually agreed upon by the Parties.

3.15 Should an error be detected by the EMI format edits performed by BellSouth on data received from Level 3, the entire pack containing the affected data will not be processed by BellSouth. BellSouth will notify Level 3 of the error. Level 3 will correct the error(s) and will resend the entire pack to BellSouth for processing. In the event that an out-of-sequence condition occurs on subsequent packs, Level 3 will resend these packs to BellSouth after the pack containing the error has been successfully reprocessed by BellSouth.

3.16 In association with message distribution service, BellSouth will provide Level 3 with associated intercompany settlements reports (CATS and NICS) as appropriate.

3.17 Deleted

3.18 Intercompany Settlements Messages

3.18.1 Intercompany Settlements Messages facilitate the settlement of revenues associated with traffic originated from or billed by Level 3 as a facilities based provider of local exchange telecommunications services outside the BellSouth

region. Only traffic that originates in one Bell operating territory and bills in another Bell operating territory is included. Traffic that originates and bills within the same Bell operating territory will be settled on a local basis between Level 3 and the involved company(ies), unless that company is participating in NICS.

3.18.2 Both traffic that originates outside the BellSouth region by Level 3 and is billed within the BellSouth region, and traffic that originates within the BellSouth region and is billed outside the BellSouth region by Level 3, is covered by CATS. Also covered is traffic that either is originated by or billed by Level 3, involves a company other than Level 3, qualifies for inclusion in the CATS settlement, and is not originated or billed within the BellSouth region (NICS).

3.18.3 Once Level 3 is operating within the BellSouth territory, revenues associated with calls originated and billed within the BellSouth region will be settled via NICS.

3.18.4 BellSouth will receive the monthly NICS reports from Telcordia on behalf of Level 3. BellSouth will distribute copies of these reports to Level 3 on a monthly basis.

3.18.5 BellSouth will receive the monthly CATS reports from Telcordia on behalf of Level 3. BellSouth will distribute copies of these reports to Level 3 on a monthly basis.

3.18.6 BellSouth will collect the revenue earned by Level 3 from the Bell operating company in whose territory the messages are billed via CATS, less a per message billing and collection fee of five cents ($0.05), on behalf of Level 3. BellSouth will remit the revenue billed by Level 3 to the Bell operating company in whose territory the messages originated, less a per message billing and collection fee of five cents ($0.05), on behalf on Level 3. These two amounts will be netted together by BellSouth and the resulting charge or credit issued to Level 3 via a monthly Carrier Access Billing System (CABS) miscellaneous bill.

3.18.7 BellSouth will collect the revenue earned by Level 3 within the BellSouth territory from another CLEC also within the BellSouth territory (NICS) where the messages are billed, less a per message billing and collection fee of five cents ($0.05), on behalf of Level 3. BellSouth will remit the revenue billed by Level 3 within the BellSouth region to the CLEC also within the BellSouth region, where the messages originated, less a per message billing and collection fee of five cents ($0.05). These two amounts will be netted together by BellSouth and the resulting charge or credit issued to Level 3 via a monthly CABS miscellaneous bill.

3.18.8 BellSouth and Level 3 agree that monthly netted amounts of less than fifty dollars ($50.00) will not be settled.

## 4. OPTIONAL DAILY USAGE FILE

4.1 Upon written request from Level 3, BellSouth will provide the Optional Daily Usage File (ODUF) service to Level 3 pursuant to the terms and conditions set forth in this section.

4.2 Level 3 shall furnish all relevant information required by BellSouth for the provision of the ODUF.

4.3 The ODUF feed will contain messages that were carried over the BellSouth Network and processed in the BellSouth Billing System, but billed to a Level 3 customer.

4.4 Charges for the ODUF will appear on Level 3s' monthly bills for the previous month's usage. The charges are as set forth in Exhibit A to this Attachment. Level 3 will be billed at the ODUF rates that are in effect at the end of the previous month.

4.5 The ODUF feed will contain both rated and unrated messages. All messages will be in the standard Alliance for Telecommunications Industry Solutions (ATIS) EMI record format.

4.6 Messages that error in the billing system of Level 3 will be the responsibility of Level 3. If, however, Level 3 should encounter significant volumes of errored messages that prevent processing by Level 3 within its systems, as determined by Level 3 BellSouth will work with Level 3 to determine the source of the errors and the appropriate resolution.

4.7 The following specifications shall apply to the ODUF feed.

4.7.1 ODUF Messages to be Transmitted

4.7.1.1 The following messages recorded by BellSouth will be transmitted to Level 3:

4.7.1.1.1 Message recording for per use/per activation type services (examples: Three -Way Calling, Verify, Interrupt, Call Return, etc.)

4.7.1.1.2 Measured billable Local

4.7.1.1.3 Directory Assistance messages

4.7.1.1.4 IntraLATA Toll

4.7.1.1.5 WATS and 800 Service

4.7.1.1.6 N11

4.7.1.1.7 Information Service Provider Messages

4.7.1.1.8 Operator Services Messages

4.7.1.1.9 Operator Services Message Attempted Calls (Network Element only)

4.7.1.1.10 Credit/Cancel Records

4.7.1.1.11 Usage for Voice Mail Message Service

4.7.1.2 Rated Incollects (messages BellSouth receives from other revenue accounting offices) can also be on ODUF. Rated Incollects will be intermingled with BellSouth recorded rated and unrated usage. Rated Incollects will not be packed separately.

4.7.1.3 BellSouth will perform duplicate record checks on records processed to ODUF. Any duplicate messages detected will be deleted and not sent to Level 3.

4.7.1.4 In the event that Level 3 detects a duplicate on ODUF they receive from BellSouth, Level 3 will drop the duplicate message and will not return the duplicate to BellSouth.

4.7.2 ODUF Physical File Characteristics

4.7.2.1 ODUF will be distributed to Level 3 via CONNECT:Direct, Secure File Transfer Protocol (FTP) or another mutually agreed medium. The ODUF feed will be a variable block format. The data on the ODUF feed will be in a non-compacted EMI format (175 byte format plus modules). It will be created on a daily basis Monday through Friday except holidays. Details such as dataset name and delivery schedule will be addressed during negotiations of the distribution medium. There will be a maximum of one dataset per workday per OCN.

4.7.2.2 Data circuits (private line or dial-up) will be required between BellSouth and Level 3 for the purpose of data transmission as set forth in Section 3.10.1 above.

4.7.2.3 If Level 3 utilizes Secure File Transfer Protocol (FTP) for data file transmission, purchase of the Secure File Transfer Protocol (FTP) software will be the responsibility of Level 3.

4.7.3 ODUF Packing Specifications

4.7.3.1 A pack will contain a minimum of one message record or a maximum of 99,999 message records plus a pack header record and a pack trailer record. One transmission can contain a maximum of 99 packs and a minimum of one pack.

4.7.3.2 The OCN, From RAO, and Invoice Number will control the invoice sequencing. The From RAO will be used to identify to Level 3 which BellSouth RAO that is sending the message. BellSouth and Level 3 will use the invoice sequencing to control data exchange. BellSouth will be notified of sequence failures identified by Level 3 and resend the data as appropriate.

The data will be packed using ATIS EMI records.

4.7.4 ODUF Pack Rejection

4.7.4.1 Level 3 will notify BellSouth within one business day of rejected packs (via the mutually agreed medium). Packs could be rejected because of pack sequencing discrepancies or a critical edit failure on the Pack Header or Pack Trailer records (i.e. out-of-balance condition on grand totals, invalid data populated). Standard ATIS EMI error codes will be used. Level 3 will not be required to return the actual rejected data to BellSouth. Rejected packs will be corrected and retransmitted to Level 3 by BellSouth.

4.7.5 ODUF Control Data

4.7.5.1 Level 3 will send one confirmation record per pack that is received from BellSouth. This confirmation record will indicate Level 3's receipt of the pack and acceptance or rejection of the pack. Pack Status Code(s) will be populated using standard ATIS EMI error codes for packs that were rejected by Level 3 for reasons stated in the above section.

4.7.6 ODUF Testing

4.7.6.1 Upon request from Level 3, BellSouth shall send ODUF test files to Level 3. The Parties agree to review and discuss the ODUF content and/or format. For testing of usage results, BellSouth shall request that Level 3 set up a production (live) file. The live test may consist of Level 3's employees making test calls for the types of services Level 3 requests on ODUF. These test calls are logged by Level 3, and the logs are provided to BellSouth. These logs will be used to verify the files. Testing will be completed within 30 calendar days from the date on which the initial test file was sent.

## 5. ACCESS DAILY USAGE FILE

5.1 Upon written request from Level 3, BellSouth will provide the Access Daily Usage File (ADUF) service to Level 3 pursuant to the terms and conditions set forth in this section.

5.2 Level 3 shall furnish all relevant information required by BellSouth for the provision of ADUF.

5.3 ADUF will contain access messages associated with a port that Level 3 has purchased from BellSouth

5.4 Charges for ADUF will appear on Level 3's monthly bills for the previous month's usage. The charges are as set forth in Exhibit A to this Attachment. Level 3 will be billed at the ADUF rates that are in effect at the end of the previous month.

5.5 Messages that error in the billing system of Level 3 will be the responsibility of Level 3. If, however, Level 3 should encounter significant volumes of errored

messages that prevent processing by Level 3 within its systems as determined by Level 3, BellSouth will work with Level 3 to determine the source of the errors and the appropriate resolution.

5.6 ADUF Messages To Be Transmitted

5.6.1 The following messages recorded by BellSouth will be transmitted to Level 3:

5.6.1.1 Recorded originating and terminating interstate and intrastate access records associated with a port.

5.6.1.2 Recorded terminating access records for undetermined jurisdiction access records associated with a port.

5.6.2 BellSouth will perform duplicate record checks on records processed to ADUF. Any duplicate messages detected will be dropped and not sent to Level 3.

5.6.3 In the event that Level 3 detects a duplicate on ADUF they receive from BellSouth, Level 3 will drop the duplicate message and will not return the duplicate to BellSouth.

5.6.4 ADUF Physical File Characteristics

5.6.4.1 ADUF will be distributed to Level 3 via CONNECT:Direct, Secure File Transfer Protocol (FTP) or another mutually agreed medium. The ADUF feed will be a fixed block format. The data on the ADUF feed will be in a non-compacted EMI format (210 byte). It will be created on a daily basis Monday through Friday except holidays. Details such as dataset name and delivery schedule will be addressed during negotiations of the distribution medium. There will be a maximum of one dataset per workday per OCN.

5.6.4.2 Data circuits (private line or dial-up) will be required between BellSouth and Level 3 for the purpose of data transmission as set forth in Section 3.10.1 above.

5.6.4.3 If Level 3 utilizes Secure File Transfer Protocol (FTP) for data file transmission, purchase of the Secure File Transfer Protocol (FTP) software will be the responsibility of Level 3.

5.6.5 ADUF Packing Specifications

5.6.5.1 A pack will contain a minimum of one message record or a maximum of 99,999 message records plus a pack header record and a pack trailer record. One transmission can contain a maximum of 99 packs and a minimum of one pack.

5.6.5.2 The OCN, From RAO, and Invoice Number will control the invoice sequencing. The From RAO will be used to identify to Level 3 which BellSouth RAO is sending the message. BellSouth and Level 3 will use the invoice sequencing to

control data exchange. BellSouth will be notified of sequence failures identified by Level 3 and resend the data as appropriate.

The data will be packed using ATIS EMI records.

5.6.6 ADUF Pack Rejection

5.6.6.1 Level 3 will notify BellSouth within one business day of rejected packs (via the mutually agreed medium). Packs could be rejected because of pack sequencing discrepancies or a critical edit failure on the Pack Header or Pack Trailer records (i.e. out-of-balance condition on grand totals, invalid data populated). Standard ATIS EMI error codes will be used. Level 3 will not be required to return the actual rejected data to BellSouth. Rejected packs will be corrected and retransmitted to Level 3 by BellSouth.

5.6.7 ADUF Control Data

5.6.7.1 Level 3 will send one confirmation record per pack that is received from BellSouth. This confirmation record will indicate Level 3's receipt of the pack and acceptance or rejection of the pack. Pack Status Code(s) will be populated using standard ATIS EMI error codes for packs that were rejected by Level 3 for reasons stated in the above section.

5.6.8 ADUF Testing

5.6.8.1 Upon request from Level 3, BellSouth shall send a test file of generic data to Level 3 via Connect:Direct or Text File via E-Mail. The Parties agree to review and discuss the test file's content and/or format.

## 6. ENHANCED OPTIONAL DAILY USAGE FILE (EODUF)

6.1 Upon written request from Level 3, BellSouth will provide the Enhanced Optional Daily Usage File (EODUF) service to Level 3 pursuant to the terms and conditions set forth in this section. EODUF will only be sent to existing ODUF subscribers who request the EODUF option.

6.2 Level 3 shall furnish all relevant information required by BellSouth for the provision of the Enhanced Optional Daily Usage File.

6.3 The Enhanced Optional Daily Usage File (EODUF) will provide usage data for local calls originating from resold Flat Rate Business and Residential Lines.

6.4 Charges for delivery of the Enhanced Optional Daily Usage File will appear on Level 3's monthly bills for the previous month's usage. The charges are as set forth in Exhibit A to this Attachment. Level 3 will be billed at the EODUF rates that are in effect at the end of the previous month.

6.5 All messages will be in the standard Alliance for Telecommunications Industry Solutions (ATIS) EMI record format.

6.6 Messages that error in the billing system of Level 3 will be the responsibility of Level 3. If, however, Level 3 should encounter significant volumes of errored messages that prevent processing by Level 3 within its systems as determined by Level 3, BellSouth will work with Level 3 to determine the source of the errors and the appropriate resolution.

6.7 The following specifications shall apply to the EODUF feed.

6.7.1 Usage To Be Transmitted

6.7.1.1 The following messages recorded by BellSouth will be transmitted to Level 3:

6.7.1.1.1 Customer usage data for flat rated local call originating from Level 3's End User lines (1FB or 1FR). The EODUF record for flat rate messages will include:

6.7.1.1.2 Date of Call

6.7.1.1.3 From Number

6.7.1.1.4 To Number

6.7.1.1.5 Connect Time

6.7.1.1.6 Conversation Time

6.7.1.1.7 Method of Recording

6.7.1.1.8 From RAO

6.7.1.1.9 Rate Class

6.7.1.1.10 Message Type

6.7.1.1.11 Billing Indicators

6.7.1.1.12 Bill to Number

6.7.1.2 BellSouth will perform duplicate record checks on EODUF records processed to Optional Daily Usage File. Any duplicate messages detected will be deleted and not sent to Level 3.

6.7.1.3 In the event that Level 3 detects a duplicate on Enhanced Optional Daily Usage File they receive from BellSouth, Level 3 will drop the duplicate message (Level 3 will not return the duplicate to BellSouth).

6.7.2 Physical File Characteristics

6.7.2.1 The EODUF feed will be distributed to Level 3 over their existing Optional Daily Usage File (ODUF) feed. The EODUF messages will be intermingled among Level 3's Optional Daily Usage File (ODUF) messages. The EODUF will be a variable block format (2476) with an LRECL of 2472. The data on the EODUF will be in a non-compacted EMI format (175 byte format plus modules). It will be created on a daily basis (Monday through Friday except holidays).

6.7.2.2 Data circuits (private line or dial-up) may be required between BellSouth and Level 3 for the purpose of data transmission. Where a dedicated line is required, Level 3 will be responsible for ordering the circuit, overseeing its installation and coordinating the installation with BellSouth. Level 3 will also be responsible for any charges associated with this line. Equipment required on the BellSouth end to attach the line to the mainframe computer and to transmit successfully ongoing will be negotiated on an individual case basis. Where a dial-up facility is required, dial circuits will be installed in the BellSouth data center by BellSouth and the associated charges assessed to Level 3. Additionally, all message toll charges associated with the use of the dial circuit by Level 3 will be the responsibility of Level 3. Associated equipment on the BellSouth end, including a modem, will be negotiated on an individual case basis between the Parties. All equipment, including modems and software, that is required on Level 3's end for the purpose of data transmission will be the responsibility of Level 3.

6.7.3 Packing Specifications

6.7.3.1 A pack will contain a minimum of one message record or a maximum of 99,999 message records plus a pack header record and a pack trailer record. One transmission can contain a maximum of 99 packs and a minimum of one pack.

6.7.3.2 The Operating Company Number (OCN), From Revenue Accounting Office (RAO), and Invoice Number will control the invoice sequencing. The From RAO will be used to identify to Level 3 which BellSouth RAO is sending the message. BellSouth and Level 3 will use the invoice sequencing to control data exchange. BellSouth will be notified of sequence failures identified by Level 3 and resend the data as appropriate.

6.7.3.3 The data will be packed using ATIS EMI records.

## ODUF/ADUF/CMDS - Alabama

| CATEGORY | RATE ELEMENTS | Interim | Zone | BCS | USOC | RATES ($) | | | | | Svc Order Submitted Elec per LSR | Svc Order Submitted Manually per LSR | Attachment: 7 | | Exhibit: A | |
|---|---|---|---|---|---|---|---|---|---|---|---|---|---|---|---|---|
| | | | | | | | | | | | | | Incremental Charge - Manual Svc Order vs. Electronic-1st | Incremental Charge - Manual Svc Order vs. Electronic-Add'l | Incremental Charge - Manual Svc Order vs. Electronic-Disc 1st | Incremental Charge - Manual Svc Order vs. Electronic-Disc Add'l |
| | | | | | | Rec | Nonrecurring | | Nonrecurring Disconnect | | OSS Rates ($) | | | | | |
| | | | | | | | First | Add'l | First | Add'l | SOMEC | SOMAN | SOMAN | SOMAN | SOMAN | SOMAN |
| ODUF/ADUF/CMDS | | | | | | | | | | | | | | | | |
| | ACCESS DAILY USAGE FILE (ADUF) | | | | | | | | | | | | | | | |
| | ADUF: Message Processing, per message | | | | | 0.007037 | | | | | | | | | | |
| | ADUF: Data Transmission (CONNECT:DIRECT), per message | | | | | 0.000113 | | | | | | | | | | |
| | OPTIONAL DAILY USAGE FILE (ODUF) | | | | | | | | | | | | | | | |
| | ODUF: Recording, per message | | | | | 0.000011 | | | | | | | | | | |
| | ODUF: Message Processing, per message | | | | | 0.004101 | | | | | | | | | | |
| | ODUF: Message Processing, per Magnetic Tape provisioned | | | | | 42.67 | | | | | | | | | | |
| | ODUF: Data Transmission (CONNECT:DIRECT), per message | | | | | 0.000094 | | | | | | | | | | |
| | CENTRALIZED MESSAGE DISTRIBUTION SERVICE (CMDS) | | | | | | | | | | | | | | | |
| | CMDS: Message Processing, per message | | | | | 0.004 | | | | | | | | | | |
| | CMDS: Data Transmission (CONNECT:DIRECT), per message | | | | | 0.001 | | | | | | | | | | |
| | Notes: If no rate is identified in the contract, the rate for the specific service or function will be as set forth in applicable BellSouth tariff or as negotiated by the Parties upon request by either Party. | | | | | | | | | | | | | | | |

| ODUF/ADUF/CMDS - Florida | | | | | | | | | | | | | Attachment: 7 | | Exhibit: A | |
|---|---|---|---|---|---|---|---|---|---|---|---|---|---|---|---|---|
| CATEGORY | | RATE ELEMENTS | Interim | Zone | BCS | USOC | RATES ($) | | | | Svc Order Submitted Elec per LSR | Svc Order Submitted Manually per LSR | Incremental Charge - Manual Svc Order vs. Electronic-1st | Incremental Charge - Manual Svc Order vs. Electronic-Add'l | Incremental Charge - Manual Svc Order vs. Electronic-Disc 1st | Incremental Charge - Manual Svc Order vs. Electronic-Disc Add'l |
| | | | | | | | Rec | Nonrecurring | | Nonrecurring Disconnect | | | OSS Rates ($) | | | |
| | | | | | | | | First | Add'l | First | Add'l | SOMEC | SOMAN | SOMAN | SOMAN | SOMAN | SOMAN |
| ODUF/ADUF/CMDS | | | | | | | | | | | | | | | | |
| | ACCESS DAILY USAGE FILE (ADUF) | | | | | | | | | | | | | | | |
| | | ADUF: Message Processing, per message | | | | | 0.001656 | | | | | | | | | |
| | | ADUF: Data Transmission (CONNECT:DIRECT), per message | | | | | 0.0001245 | | | | | | | | | |
| | OPTIONAL DAILY USAGE FILE (ODUF) | | | | | | | | | | | | | | | |
| | | ODUF: Recording, per message | | | | | 0.0000071 | | | | | | | | | |
| | | ODUF: Message Processing, per message | | | | | 0.002146 | | | | | | | | | |
| | | ODUF: Message Processing, per Magnetic Tape provisioned | | | | | 35.91 | | | | | | | | | |
| | | ODUF: Data Transmission (CONNECT:DIRECT), per message | | | | | 0.00010375 | | | | | | | | | |
| | CENTRALIZED MESSAGE DISTRIBUTION SERVICE (CMDS) | | | | | | | | | | | | | | | |
| | | CMDS: Message Processing, per message | | | | | 0.004 | | | | | | | | | |
| | | CMDS: Data Transmission (CONNECT:DIRECT), per message | | | | | 0.001 | | | | | | | | | |
| | Notes: If no rate is identified in the contract, the rate for the specific service or function will be as set forth in applicable BellSouth tariff or as negotiated by the Parties upon request by either Party. | | | | | | | | | | | | | | | |

| ODUF/ADUF/CMDS - Georgia | | | | | | | | | | | | | | Attachment: 7 | | Exhibit: A | |
|---|---|---|---|---|---|---|---|---|---|---|---|---|---|---|---|---|---|
| CATEGORY | | RATE ELEMENTS | Interim | Zone | BCS | USOC | RATES ($) | | | | | Svc Order Submitted Elec per LSR | Svc Order Submitted Manually per LSR | Incremental Charge - Manual Svc Order vs. Electronic-1st | Incremental Charge - Manual Svc Order vs. Electronic-Add'l | Incremental Charge - Manual Svc Order vs. Electronic-Disc 1st | Incremental Charge - Manual Svc Order vs. Electronic-Disc Add'l |
| | | | | | | | Rec | Nonrecurring | | Nonrecurring Disconnect | | OSS Rates ($) | | | | | |
| | | | | | | | | First | Add'l | First | Add'l | SOMEC | SOMAN | SOMAN | SOMAN | SOMAN | SOMAN |
| ODUF/ADUF/CMDS | | | | | | | | | | | | | | | | | |
| | ACCESS DAILY USAGE FILE (ADUF) | | | | | | | | | | | | | | | | |
| | | ADUF: Message Processing, per message | | | | | 0.001713 | | | | | | | | | | |
| | | ADUF: Data Transmission (CONNECT:DIRECT), per message | | | | | 0.00013027 | | | | | | | | | | |
| | OPTIONAL DAILY USAGE FILE (ODUF) | | | | | | | | | | | | | | | | |
| | | ODUF: Recording, per message | | | | | 0.0000068 | | | | | | | | | | |
| | | ODUF: Message Processing, per message | | | | | 0.002167 | | | | | | | | | | |
| | | ODUF: Message Processing, per Magnetic Tape provisioned | | | | | 36.06 | | | | | | | | | | |
| | | ODUF: Data Transmission (CONNECT:DIRECT), per message | | | | | 0.00010856 | | | | | | | | | | |
| | CENTRALIZED MESSAGE DISTRIBUTION SERVICE (CMDS) | | | | | | | | | | | | | | | | |
| | | CMDS: Message Processing, per message | | | | | 0.004 | | | | | | | | | | |
| | | CMDS: Data Transmission (CONNECT:DIRECT), per message | | | | | 0.001 | | | | | | | | | | |
| | Notes: If no rate is identified in the contract, the rate for the specific service or function will be as set forth in applicable BellSouth tariff or as negotiated by the Parties upon request by either Party. | | | | | | | | | | | | | | | | |

| ODUF/ADUF/CMDS - Kentucky | | | | | | | | | | | | | | Attachment: 7 | | Exhibit: A | |
|---|---|---|---|---|---|---|---|---|---|---|---|---|---|---|---|---|---|
| CATEGORY | | RATE ELEMENTS | Interim | Zone | BCS | USOC | RATES ($) | | | | | Svc Order Submitted Elec per LSR | Svc Order Submitted Manually per LSR | Incremental Charge - Manual Svc Order vs. Electronic-1st | Incremental Charge - Manual Svc Order vs. Electronic-Add'l | Incremental Charge - Manual Svc Order vs. Electronic-Disc 1st | Incremental Charge - Manual Svc Order vs. Electronic-Disc Add'l |
| | | | | | | | Rec | Nonrecurring | | Nonrecurring Disconnect | | OSS Rates ($) | | | | | |
| | | | | | | | | First | Add'l | First | Add'l | SOMEC | SOMAN | SOMAN | SOMAN | SOMAN | SOMAN |
| ODUF/ADUF/CMDS | | | | | | | | | | | | | | | | | |
| | ACCESS DAILY USAGE FILE (ADUF) | | | | | | | | | | | | | | | | |
| | | ADUF: Message Processing, per message | | | | | 0.001857 | | | | | | | | | | |
| | | ADUF: Data Transmission (CONNECT:DIRECT), per message | | | | | 0.00012447 | | | | | | | | | | |
| | OPTIONAL DAILY USAGE FILE (ODUF) | | | | | | | | | | | | | | | | |
| | | ODUF: Recording, per message | | | | | 0.0000136 | | | | | | | | | | |
| | | ODUF: Message Processing, per message | | | | | 0.002506 | | | | | | | | | | |
| | | ODUF: Message Processing, per Magnetic Tape provisioned | | | | | 35.90 | | | | | | | | | | |
| | | ODUF: Data Transmission (CONNECT:DIRECT), per message | | | | | 0.00010372 | | | | | | | | | | |
| | CENTRALIZED MESSAGE DISTRIBUTION SERVICE (CMDS) | | | | | | | | | | | | | | | | |
| | | CMDS: Message Processing, per message | | | | | 0.004 | | | | | | | | | | |
| | | CMDS: Data Transmission (CONNECT:DIRECT), per message | | | | | 0.001 | | | | | | | | | | |
| | Notes: If no rate is identified in the contract, the rate for the specific service or function will be as set forth in applicable BellSouth tariff or as negotiated by the Parties upon request by either Party. | | | | | | | | | | | | | | | | |

| ODUF/ADUF/CMDS - Louisiana | | | | | | | | | | | | | Attachment: 7 | | Exhibit: A | |
|---|---|---|---|---|---|---|---|---|---|---|---|---|---|---|---|---|
| CATEGORY | | RATE ELEMENTS | Interim | Zone | BCS | USOC | RATES ($) | | | | | | Incremental Charge - Manual Svc Order vs. Electronic-1st | Incremental Charge - Manual Svc Order vs. Electronic-Add'l | Incremental Charge - Manual Svc Order vs. Electronic-Disc 1st | Incremental Charge - Manual Svc Order vs. Electronic-Disc Add'l |
| | | | | | | | Rec | Nonrecurring | | Nonrecurring Disconnect | | Svc Order Submitted Elec per LSR | Svc Order Submitted Manually per LSR | OSS Rates ($) | | | |
| | | | | | | | | First | Add'l | First | Add'l | SOMEC | SOMAN | SOMAN | SOMAN | SOMAN | SOMAN |
| ODUF/ADUF/CMDS | | | | | | | | | | | | | | | | |
| | ACCESS DAILY USAGE FILE (ADUF) | | | | | | | | | | | | | | | |
| | | ADUF: Message Processing, per message | | | | | 0.007983 | | | | | | | | | |
| | | ADUF: Data Transmission (CONNECT:DIRECT), per message | | | | | 0.00012681 | | | | | | | | | |
| | OPTIONAL DAILY USAGE FILE (ODUF) | | | | | | | | | | | | | | | |
| | | ODUF: Recording, per message | | | | | 0.0000117 | | | | | | | | | |
| | | ODUF: Message Processing, per message | | | | | 0.004641 | | | | | | | | | |
| | | ODUF: Message Processing, per Magnetic Tape provisioned | | | | | 48.45 | | | | | | | | | |
| | | ODUF: Data Transmission (CONNECT:DIRECT), per message | | | | | 0.00010568 | | | | | | | | | |
| | CENTRALIZED MESSAGE DISTRIBUTION SERVICE (CMDS) | | | | | | | | | | | | | | | |
| | | CMDS: Message Processing, per message | | | | | 0.004 | | | | | | | | | |
| | | CMDS: Data Transmission (CONNECT:DIRECT), per message | | | | | 0.001 | | | | | | | | | |
| | Notes: If no rate is identified in the contract, the rate for the specific service or function will be as set forth in applicable BellSouth tariff or as negotiated by the Parties upon request by either Party. | | | | | | | | | | | | | | | |

| ODUF/ADUF/CMDS - Mississippi | | | | | | | | | | | | | Attachment: 7 | | Exhibit: A | |
|---|---|---|---|---|---|---|---|---|---|---|---|---|---|---|---|---|
| CATEGORY | | RATE ELEMENTS | Interim | Zone | BCS | USOC | RATES ($) | | | | | Svc Order Submitted Elec per LSR | Svc Order Submitted Manually per LSR | Incremental Charge - Manual Svc Order vs. Electronic-1st | Incremental Charge - Manual Svc Order vs. Electronic-Add'l | Incremental Charge - Manual Svc Order vs. Electronic-Disc 1st | Incremental Charge - Manual Svc Order vs. Electronic-Disc Add'l |
| | | | | | | | Rec | Nonrecurring | | Nonrecurring Disconnect | | OSS Rates ($) | | | | | |
| | | | | | | | | First | Add'l | First | Add'l | SOMEC | SOMAN | SOMAN | SOMAN | SOMAN | SOMAN |
| ODUF/ADUF/CMDS | | | | | | | | | | | | | | | | | |
| | ACCESS DAILY USAGE FILE (ADUF) | | | | | | | | | | | | | | | | |
| | | ADUF: Message Processing, per message | | | | | 0.008087 | | | | | | | | | | |
| | | ADUF: Data Transmission (CONNECT:DIRECT), per message | | | | | 0.00012803 | | | | | | | | | | |
| | OPTIONAL DAILY USAGE FILE (ODUF) | | | | | | | | | | | | | | | | |
| | | ODUF: Recording, per message | | | | | 0.0000063 | | | | | | | | | | |
| | | ODUF: Message Processing, per message | | | | | 0.004707 | | | | | | | | | | |
| | | ODUF: Message Processing, per Magnetic Tape provisioned | | | | | 49.04 | | | | | | | | | | |
| | | ODUF: Data Transmission (CONNECT:DIRECT), per message | | | | | 0.00010669 | | | | | | | | | | |
| | CENTRALIZED MESSAGE DISTRIBUTION SERVICE (CMDS) | | | | | | | | | | | | | | | | |
| | | CMDS: Message Processing, per message | | | | | 0.004 | | | | | | | | | | |
| | | CMDS: Data Transmission (CONNECT:DIRECT), per message | | | | | 0.001 | | | | | | | | | | |
| | Notes: If no rate is identified in the contract, the rate for the specific service or function will be as set forth in applicable BellSouth tariff or as negotiated by the Parties upon request by either Party. | | | | | | | | | | | | | | | | |

| ODUF/ADUF/CMDS - North Carolina | | | | | | | | | | | | | Attachment: 7 | | Exhibit: A | |
|---|---|---|---|---|---|---|---|---|---|---|---|---|---|---|---|---|
| CATEGORY | | RATE ELEMENTS | Interim | Zone | BCS | USOC | RATES ($) | | | | | Svc Order Submitted Elec per LSR | Svc Order Submitted Manually per LSR | Incremental Charge - Manual Svc Order vs. Electronic-1st | Incremental Charge - Manual Svc Order vs. Electronic-Add'l | Incremental Charge - Manual Svc Order vs. Electronic-Disc 1st | Incremental Charge - Manual Svc Order vs. Electronic-Disc Add'l |
| | | | | | | | Rec | Nonrecurring | | Nonrecurring Disconnect | | OSS Rates ($) | | | | | |
| | | | | | | | | First | Add'l | First | Add'l | SOMEC | SOMAN | SOMAN | SOMAN | SOMAN | SOMAN |
| ODUF/ADUF/CMDS | | | | | | | | | | | | | | | | | |
| | ACCESS DAILY USAGE FILE (ADUF) | | | | | | | | | | | | | | | | |
| | | ADUF: Message Processing, per message | | | | | 0.01435 | | | | | | | | | | |
| | | ADUF: Data Transmission (CONNECT:DIRECT), per message | | | | | 0.0001277 | | | | | | | | | | |
| | OPTIONAL DAILY USAGE FILE (ODUF) | | | | | | | | | | | | | | | | |
| | | ODUF: Recording, per message | | | | | 0.0003 | | | | | | | | | | |
| | | ODUF: Message Processing, per message | | | | | 0.0032 | | | | | | | | | | |
| | | ODUF: Message Processing, per Magnetic Tape provisioned | | | | | 54.61 | | | | | | | | | | |
| | | ODUF: Data Transmission (CONNECT:DIRECT), per message | | | | | 0.00004 | | | | | | | | | | |
| | CENTRALIZED MESSAGE DISTRIBUTION SERVICE (CMDS) | | | | | | | | | | | | | | | | |
| | | CMDS: Message Processing, per message | | | | | 0.004 | | | | | | | | | | |
| | | CMDS: Data Transmission (CONNECT:DIRECT), per message | | | | | 0.001 | | | | | | | | | | |
| | Notes: If no rate is identified in the contract, the rate for the specific service or function will be as set forth in applicable BellSouth tariff or as negotiated by the Parties upon request by either Party. | | | | | | | | | | | | | | | | |

| ODUF/ADUF/CMDS - South Carolina | | | | | | | | | | | | | | Attachment: 7 | | Exhibit: A | |
|---|---|---|---|---|---|---|---|---|---|---|---|---|---|---|---|---|---|
| CATEGORY | | RATE ELEMENTS | Interim | Zone | BCS | USOC | RATES ($) | | | | | Svc Order Submitted Elec per LSR | Svc Order Submitted Manually per LSR | Incremental Charge - Manual Svc Order vs. Electronic-1st | Incremental Charge - Manual Svc Order vs. Electronic-Add'l | Incremental Charge - Manual Svc Order vs. Electronic-Disc 1st | Incremental Charge - Manual Svc Order vs. Electronic-Disc Add'l |
| | | | | | | | Rec | Nonrecurring | | Nonrecurring Disconnect | | OSS Rates ($) | | | | | |
| | | | | | | | | First | Add'l | First | Add'l | SOMEC | SOMAN | SOMAN | SOMAN | SOMAN | SOMAN |
| ODUF/ADUF/CMDS | | | | | | | | | | | | | | | | | |
| | ACCESS DAILY USAGE FILE (ADUF) | | | | | | | | | | | | | | | | |
| | | ADUF: Message Processing, per message | | | | | 0.008061 | | | | | | | | | | |
| | | ADUF: Data Transmission (CONNECT:DIRECT), per message | | | | | 0.00013036 | | | | | | | | | | |
| | OPTIONAL DAILY USAGE FILE (ODUF) | | | | | | | | | | | | | | | | |
| | | ODUF: Recording, per message | | | | | 0.0000216 | | | | | | | | | | |
| | | ODUF: Message Processing, per message | | | | | 0.004704 | | | | | | | | | | |
| | | ODUF: Message Processing, per Magnetic Tape provisioned | | | | | 48.87 | | | | | | | | | | |
| | | ODUF: Data Transmission (CONNECT:DIRECT), per message | | | | | 0.00010863 | | | | | | | | | | |
| | CENTRALIZED MESSAGE DISTRIBUTION SERVICE (CMDS) | | | | | | | | | | | | | | | | |
| | | CMDS: Message Processing, per message | | | | | 0.004 | | | | | | | | | | |
| | | CMDS: Data Transmission (CONNECT:DIRECT), per message | | | | | 0.001 | | | | | | | | | | |
| | Notes: If no rate is identified in the contract, the rate for the specific service or function will be as set forth in applicable BellSouth tariff or as negotiated by the Parties upon request by either Party. | | | | | | | | | | | | | | | | |

| ODUF/ADUF/CMDS - Tennessee | | | | | | | | | | | | | Attachment: 7 | | Exhibit: A | |
|---|---|---|---|---|---|---|---|---|---|---|---|---|---|---|---|---|
| CATEGORY | | RATE ELEMENTS | Interim | Zone | BCS | USOC | RATES ($) | | | | | Svc Order Submitted Elec per LSR | Svc Order Submitted Manually per LSR | Incremental Charge - Manual Svc Order vs. Electronic-1st | Incremental Charge - Manual Svc Order vs. Electronic-Add'l | Incremental Charge - Manual Svc Order vs. Electronic-Disc 1st | Incremental Charge - Manual Svc Order vs. Electronic-Disc Add'l |
| | | | | | | | Rec | Nonrecurring | | Nonrecurring Disconnect | | OSS Rates ($) | | | | | |
| | | | | | | | | First | Add'l | First | Add'l | SOMEC | SOMAN | SOMAN | SOMAN | SOMAN | SOMAN |
| ODUF/ADUF/CMDS | | | | | | | | | | | | | | | | | |
| | ACCESS DAILY USAGE FILE (ADUF) | | | | | | | | | | | | | | | | |
| | | ADUF: Message Processing, per message | | | | | 0.0158054 | | | | | | | | | | |
| | | ADUF: Data Transmission (CONNECT:DIRECT), per message | | | | | 0.0001387 | | | | | | | | | | |
| | OPTIONAL DAILY USAGE FILE (ODUF) | | | | | | | | | | | | | | | | |
| | | ODUF: Recording, per message | | | | | 0.0000044 | | | | | | | | | | |
| | | ODUF: Message Processing, per message | | | | | 0.0027366 | | | | | | | | | | |
| | | ODUF: Message Processing, per Magnetic Tape provisioned | | | | | 52.75 | | | | | | | | | | |
| | | ODUF: Data Transmission (CONNECT:DIRECT), per message | | | | | 0.0000339 | | | | | | | | | | |
| | CENTRALIZED MESSAGE DISTRIBUTION SERVICE (CMDS) | | | | | | | | | | | | | | | | |
| | | CMDS: Message Processing, per message | | | | | 0.004 | | | | | | | | | | |
| | | CMDS: Data Transmission (CONNECT:DIRECT), per message | | | | | 0.001 | | | | | | | | | | |
| | Notes: If no rate is identified in the contract, the rate for the specific service or function will be as set forth in applicable BellSouth tariff or as negotiated by the Parties upon request by either Party. | | | | | | | | | | | | | | | | |

# Attachment 8

## Rights-of-Way, Conduits and Pole Attachments

# Rights-of-Way, Conduits and Pole Attachments

BellSouth will provide nondiscriminatory access to any pole, duct, conduit, or right-of-way owned or controlled by BellSouth pursuant to 47 U.S.C. § 224, as amended by the Act, pursuant to terms and conditions of a license agreement subsequently negotiated with BellSouth's Competitive Structure Provisioning Center.

# Attachment 9

# Performance Measurements

# PERFORMANCE MEASUREMENTS

Upon a particular Commission's issuance of an Order pertaining to Performance Measurements in a proceeding expressly applicable to all CLECs generally, BellSouth shall implement in that state such Performance Measurements as of the date specified by the Commission. Performance Measurements that have been Ordered in a particular state can currently be accessed via the internet at https://pmap.bellsouth.com. The following Service Quality Measurements (SQM) plan adopted by the Florida Commission on February 14, 2002, as it presently exists and as it may be modified in the future, is being included as the performance measurements currently in place for the state of Tennessee. At such time that the TRA issues a subsequent Order pertaining to Performance Measurements, such Performance Measurements shall supersede the SQM contained in the Agreement.

Version 1Q03: 04/11/03

BELLSOUTH®

# BellSouth Service Quality Measurement Plan (SQM)

## Tennessee Performance Metrics

### Measurement Descriptions
### Version 1.00

### Issue Date: December 1, 2002

## Introduction

The BellSouth Service Quality Measurement Plan (SQM) describes in detail the measurements produced to evaluate the quality of service delivered to BellSouth's customers both wholesale and retail. The SQM was developed to respond to the requirements of the Communications Act of 1996 Section 251 (96 Act) which required BellSouth to provide non-discriminatory access to Competitive Local Exchange Carriers (CLEC)[1] and their Retail Customers. The reports produced by the SQM provide regulators, CLECs and BellSouth the information necessary to monitor the delivery of non-discriminatory access.

This plan results from the many divergent forces evolving from the 96 Act. The 96 Act, the Georgia Public Service Commission (GPSC) Order (Docket 7892-U 12/30/97), LCUG 1-7.0, the FCC's NPRM (CC Docket 98-56 RM9101 04/17/98), the Louisiana Public Service Commission (LPSC) Order (Docket U-22252 Subdocket C 04/19/98), the Florida Public Service Commission Order (Docket 000121-TP), numerous arbitration cases, LPSC sponsored collaborative workshops (10/98-02/00), and proceedings in Alabama, Mississippi, and North Carolina have and continue to influence the SQM.

The SQM and the reports flowing from it must change to reflect the dynamic requirements of the industry. New measurements are added as new products, systems, and processes are developed and fielded. New products and services are added as the markets for them develop and the processes stabilize. The measurements are also changed to reflect changes in systems, correct errors, and respond to both 3rd Party audit requirements and the Tennessee Regulatory Authority.

This document is intended for use by someone with knowledge of telecommunications industry, information technologies and a functional knowledge of the subject areas covered by the BellSouth Performance Measurements and the reports that flow from them.

Once it is approved, the most current copy of this document can be found on the web at URL: http://pmap.bellsouth.com in the Documentation/Exhibits folder.

## Report Publication Dates

Each month, preliminary SQM reports will be posted to BellSouth's SQM web site (http://pmap.bellsouth.com) by 8:00 A.M. EST on the 21st day of each month or the first business day after the 21st. The validated SQM reports will be posted by 8:00 A.M. on the last day of the month. Reports not posted by this time will be considered late for SEEM payment purposes. Validated SEEM reports will be posted on the 15th of the following month. SEEM payments due will also be paid on the 15th of the following month. For instance: May data will be posted in preliminary SQM reports on June 21. Final validated SQM reports will be posted on the last day of the month. Final validated SEEM reports will be posted and payments mailed on the 15th of the following month. BellSouth shall retain the performance measurement raw data files for a period of 18 months and further retain the monthly reports produced in PMAP for a period of three years.

*1. Alternative Local Exchange Companies (ALEC) and Competing Local Providers (CLP) are referred to as Competitive Local Exchange Carriers (CLEC) in this document.*

## Report Delivery Methods

CLEC SQM and SEEM reports will be considered delivered when posted to the web site. The Tennessee Regulatory Authority has access to the web site. In addition, a copy of the Monthly State Summary reports will be filed with the TRA as soon as possible after the last day of each month.

# Contents

## Section 1: Operations Support Systems (OSS)

OSS-1: Average Response Time and Response Interval (Pre-Ordering/Ordering) ---- 1-1
OSS-2: Interface Availability (Pre-Ordering/Ordering) ---- 1-5
OSS-3: Interface Availability (Maintenance & Repair) ---- 1-8
OSS-4: Response Interval (Maintenance & Repair) ---- 1-10
PO-1: Loop Makeup - Response Time – Manual ---- 1-12
PO-2: Loop Make Up - Response Time - Electronic ---- 1-14

## Section 2: Ordering

O-1: Acknowledgement Message Timeliness ---- 2-1
O-2: Acknowledgement Message Completeness ---- 2-3
O-3: Percent Flow-Through Service Requests (Summary) ---- 2-5
O-4: Percent Flow-Through Service Requests (Detail) ---- 2-8
O-5: Flow-Through Error Analysis ---- 2-11
O-6: CLEC LSR Information ---- 2-13
• LSR Flow Through Matrix ---- 2-15
O-7: Percent Rejected Service Requests ---- 2-18
O-8: Reject Interval ---- 2-20
O-9: Firm Order Confirmation Timeliness ---- 2-24
O-10: Service Inquiry with LSR Firm Order Confirmation (FOC) Response Time Manual ---- 2-27
O-11: Firm Order Confirmation and Reject Response Completeness ---- 2-29
O-12: Speed of Answer in Ordering Center ---- 2-31

## Section 3: Provisioning

P-1: Mean Held Order Interval & Distribution Intervals ---- 3-1
P-2: Average Jeopardy Notice Interval & Percentage of Orders Given Jeopardy Notices ---- 3-4
P-3: Percent Missed Initial Installation Appointments ---- 3-7
P-3A: Percent Missed Installation Appointments Including Subsequent Appointments ---- 3-10
P-4: Average Completion Interval (OCI) & Order Completion Interval Distribution ---- 3-13
P-4A: Average Order Completion and Completion Notice Interval (AOCCNI) Distribution ---- 3-16
P-5: Average Completion Notice Interval ---- 3-20
P-6: % Completions/Attempts without Notice or < 24 hours Notice ---- 3-23
P-7: Coordinated Customer Conversions Interval ---- 3-25
P-7A: Coordinated Customer Conversions – Hot Cut Timeliness % Within Interval and Average Interval ---- 3-27
P-7B: Coordinated Customer Conversions – Average Recovery Time ---- 3-29
P-7C: Hot Cut Conversions - % Provisioning Troubles Received Within 7 days of a completed Service Order ---- 3-31
P-8: Cooperative Acceptance Testing - % of xDSL Loops Successfully Tested ---- 3-33
P-9: % Provisioning Troubles within 30 days of Service Order Completion ---- 3-35
P-10: Total Service Order Cycle Time (TSOCT) ---- 3-38
P-11: Service Order Accuracy ---- 3-41
P-12: LNP-Average Disconnect Timeliness Interval & Disconnect Timeliness Interval Distribution ---- 3-43

## Section 4: Maintenance & Repair

M&R-1: Missed Repair Appointments ---- 4-1
M&R-2: Customer Trouble Report Rate ---- 4-4

M&R-3: Maintenance Average Duration ---- 4-7
M&R-4: Percent Repeat Troubles within 30 Days ---- 4-10
M&R-5: Out of Service (OOS) > 24 Hours ---- 4-13
M&R-6: Average Answer Time – Repair Centers ---- 4-16
M&R-7: Mean Time To Notify CLEC of Network Outages ---- 4-17

**Section 5: Billing**

B-1: Invoice Accuracy ---- 5-1
B-2: Mean Time to Deliver Invoices ---- 5-3
B-3: Usage Data Delivery Accuracy ---- 5-5
B-4: Usage Data Delivery Completeness ---- 5-7
B-5: Usage Data Delivery Timeliness ---- 5-9
B-6: Mean Time to Deliver Usage ---- 5-11
B-7: Recurring Charge Completeness ---- 5-13
B-8: Non-Recurring Charge Completeness ---- 5-14
B-9: Percent Daily Usage Feed Errors Corrected in X Business Days ---- 5-15
B-10: Percent Billing Errors Corrected in X Days ---- 5-17

**Section 6: Operator Services And Directory Assistance**

OS-1: Speed to Answer Performance/Average Speed to Answer – Toll ---- 6-1
OS-2: Speed to Answer Performance/Percent Answered with "X" Seconds – Toll ---- 6-3
DA-1: Speed to Answer Performance/Average Speed to Answer – Directory Assistance (DA) ---- 6-4
DA-2: Speed to Answer Performance/Percent Answered within "X" Seconds – Directory Assistance (DA) ---- 6-5

**Section 7: Database Update Information**

D-1: Average Database Update Interval ---- 7-1
D-2: Percent Database Update Accuracy ---- 7-3
D-3: Percent NXXs and LRNs Loaded by the LERG Effective Date ---- 7-5

**Section 8: E911**

E-1: Timeliness ---- 8-1
E-2: Accuracy ---- 8-3
E-3: Mean Interval ---- 8-4

**Section 9: Trunk Group Performance**

TGP-1: Trunk Group Performance-Aggregate ---- 9-1
TGP-2: Trunk Group Performance – CLEC Specific ---- 9-3

**Section 10: Collocation**

C-1: Collocation Average Response Time ---- 10-1
C-2: Collocation Average Arrangement Time ---- 10-3
C-3: Collocation Percent of Due Dates Missed ---- 10-5

**Section 11: Change Management**

CM-1: Timeliness of Change Management Notices ---- 11-1
CM-2: Change Management Notice Average Delay Days ---- 11-3
CM-3: Timeliness of Documents Associated with Change ---- 11-4
CM-4: Change Management Documentation Average Delay Days ---- 11-5
CM-5: Notification of CLEC Interface Outages ---- 11-7

**Appendix A: Reporting Scope** **A-1**

A-1: Standard Service Groupings ---- A-1
A-2: Standard Service Order Activities ---- A-1

**Appendix B: Glossary of Acronyms and Terms** B-1

**Appendix C: BellSouth Audit Policy** C-1
C-1: BellSouth's Internal Audit Policy ---------- C-1
C-2: BellSouth's External Audit Policy ---------- C-1

# Section 1: Operations Support Systems (OSS)

## OSS-1: Average Response Time and Response Interval (Pre-Ordering/ Ordering)

### Definition

Average response time and response intervals are the average times and number of requests responded to within certain intervals for accessing legacy data associated with appointment scheduling, service & feature availability, address verification, request for Telephone numbers (TNs), and Customer Service Records (CSRs).

### Exclusions

Syntactically incorrect queries.

### Business Rules

The average response time for retrieving pre-order/order information from a given legacy system is determined by summing the response times for all requests submitted to the legacy systems during the reporting period and dividing by the total number of legacy system requests for that month.

The date/time stamp shall begin when BST receives a query at the BellSouth Gateway and shall end when the query is transmitted from the BST Gateway (applies to both TAG and LENS). For BellSouth, the response interval starts when the client application (RNS or ROS) submits a request to the legacy system and ends when the appropriate response is returned to the client application. The number of accesses to the legacy systems during the reporting period which take less than 2.3 seconds, the number of accesses which take more than 6 seconds, and the number which are less than or equal to 6.3 seconds are also captured.

### Calculation

**Response Time** = (a - b)

- a = Date & Time of Legacy Response
- b = Date & Time of Legacy Request

**Average Response Time** = c ÷ d

- c = Sum of Response Times
- d = Number of Legacy Requests During the Reporting Period

### Report Structure

- Interface Type
- Not CLEC Specific
- Not product/service specific
- Regional Level

### Data Retained

| Relating to CLEC Experience | Relating to BellSouth Performance |
|---|---|
| • Report Month<br>• Legacy Contract (per reporting dimension)<br>• Response Interval<br>• Regional Scope | • Report Month<br>• Legacy Contract (per reporting dimension)<br>• Response Interval<br>• Regional Scope |

## SQM Disaggregation - Analog/Benchmark

| SQM Level of Disaggregation | SQM Analog/Benchmark |
|---|---|
| • **RSAG – Address** (Regional Street Address Guide-Address) – stores street address information used to validate customer addresses. CLECs and BellSouth query this legacy system.<br>• **RSAG – TN** (Regional Street Address Guide-Telephone number) – contains information about facilities available and telephone numbers working at a given address. CLECs and BellSouth query this legacy system.<br>• **ATLAS** (Application for Telephone Number Load Administration and Selection) – acts as a warehouse for storing telephone numbers that are available for assignment by the system. It enables CLECs and BellSouth service reps to select and reserve telephone numbers. CLECs and BellSouth query this legacy system.<br>• **COFFI** (Central Office Feature File Interface) – stores information about product and service offerings and availability. CLECs query this legacy system.<br>• **DSAP** (DOE Support Application) – provides due date information. CLECs and BellSouth query this legacy system.<br>• **CRIS** (Customer Record Information System) – Source of CSR (Customer Service Record) information. Contains information about individual customers including listings, addresses, features, services, etc. CLECs and BellSouth can query for CSR information.<br>• **P/SIMS** (Product/Services Inventory Management system) – provides information on capacity, tariffs, inventory and service availability. CLECs query this legacy system.<br>• **OASIS** (Obtain Available Services Information Systems) – Information on feature and rate availability. BellSouth queries this legacy system. | • Parity + 2 seconds |

**Table 1: Legacy System Access Times For RNS**

| System | Contract | Data | < 2.3 sec. | > 6 sec. | ≤ 6.3 sec. | Avg. Sec. | # of Calls |
|---|---|---|---|---|---|---|---|
| RSAG | RSAG-TN | Address | x | x | x | x | x |
| RSAG | RSAG-ADDR | Address | x | x | x | x | x |
| ATLAS | ATLAS-TN | TN | x | x | x | x | x |
| DSAP | DSAP-DDI | Schedule | x | x | x | x | x |
| CRIS | CRSACCTS | CSR | x | x | x | x | x |
| OASIS | OASISCAR | Feature/Service | x | x | x | x | x |
| OASIS | OASISLPC | Feature/Service | x | x | x | x | x |
| OASIS | OASISMTN | Feature/Service | x | x | x | x | x |
| OASIS | OASISBIG | Feature/Service | x | x | x | x | x |

**Table 2: Legacy System Access Times For R0S**

| System | Contract | Data | < 2.3 sec. | > 6 sec. | ≤6.3 sec. | Avg. sec. | # of Calls |
|---|---|---|---|---|---|---|---|
| RSAG | RSAG-TN | Address | x | x | x | x | x |
| RSAG | RSAG-ADDR | Address | x | x | x | x | x |
| ATLAS | ATLAS-TN | TN | x | x | x | x | x |

**Table 2: Legacy System Access Times For R0S**

| System | Contract | Data | < 2.3 sec. | > 6 sec. | ≤6.3 sec. | Avg. sec. | # of Calls |
|---|---|---|---|---|---|---|---|
| DSAP | DSAP-DDI | Schedule | x | x | x | x | x |
| CRIS | CRSOCSR | CSR | x | x | x | x | x |
| OASIS | OASISBIG | Feature/Service | x | x | x | x | x |

**Table 3: Legacy System Access Times For LENS**

| System | Contract | Data | < 2.3 sec. | > 6 sec. | ≤6.3 sec. | Avg. sec. | # of Calls |
|---|---|---|---|---|---|---|---|
| RSAG | RSAG-TN | Address | x | x | x | x | x |
| RSAG | RSAG-ADDR | Address | x | x | x | x | x |
| ATLAS | ATLAS-TN | TN | x | x | x | x | x |
| DSAP | DSAP | Schedule | x | x | x | x | x |
| CRIS | CRSECSRL | CSR | x | x | x | x | x |
| COFFI | COFFI/USOC | Feature/Service | x | x | x | x | x |
| P/SIMS | PSIMS/ORB | Feature/Service | x | x | x | x | x |

**Table 4: Legacy System Access Times For TAG**

| System | Contract | Data | < 2.3 sec. | > 6 sec. | ≤6.3 sec. | Avg. sec. | # of Calls |
|---|---|---|---|---|---|---|---|
| RSAG | RSAG-TN | Address | x | x | x | x | x |
| RSAG | RSAG-ADDR | Address | x | x | x | x | x |
| ATLAS | ATLAS-TN | TN | x | x | x | x | x |
| ATLAS | ATLAS-MLH | TN | x | x | x | x | x |
| ATLAS | ATLAS-DID | TN | x | x | x | x | x |
| DSAP | DSAP-DDI | Schedule | x | x | x | x | x |
| CRIS | TAG-CSR | CSR | x | x | x | x | x |
| P/SIMS | PSIM/ORB | Feature/Service | x | x | x | x | x |

## SEEM Measure

| SEEM Measure | | |
|---|---|---|
| Yes | Tier I | |
| | Tier II | X |

**Note**: CLEC specific data is not available in this measure. Queries of this sort do not have company specific signatures.

## SEEM Disaggregation - Analog/Benchmark

| SEEM Disaggregation | SEEM Analog/Benchmark |
|---|---|
| • **RSAG – Address** (Regional Street Address Guide-Address) – stores street address information used to validate customer addresses. CLECs and BellSouth query this legacy system.<br>• **RSAG – TN** (Regional Street Address Guide-Telephone number) – contains information about facilities available and telephone numbers working at a given address. CLECs and BellSouth query this legacy system.<br>• **ATLAS** (Application for Telephone Number Load Administration and Selection) – acts as a warehouse for storing telephone numbers that are available for assignment by the system. It enables CLECs and BellSouth service reps to select and reserve telephone numbers. CLECs and BellSouth query this legacy system.<br>• **COFFI** (Central Office Feature File Interface) – stores information about product and service offerings and availability. CLECs query this legacy system.<br>• **DSAP** (DOE Support Application) – provides due date information. CLECs and BellSouth query this legacy system.<br>• **CRIS** (Customer Record Information System) – Source of CSR (Customer Service Record) information. Contains information about individual customers including listings, addresses, features, services, etc. CLECs and BellSouth can query for CSR information.<br>• **P/SIMS** (Product/Services Inventory Management system) – provides information on capacity, tariffs, inventory and service availability. CLECs query this legacy system.<br>• **OASIS** (Obtain Available Services Information Systems) – Information on feature and rate availability. BellSouth queries this legacy system. | • Parity + 2 Seconds |

## SEEM OSS Legacy Systems

| System | BellSouth | CLEC |
|---|---|---|
| **Telephone Number/Address** | | |
| RSAG-ADDR | RNS, ROS | TAG, LENS |
| RSAG-TN | RNS, ROS | TAG, LENS |
| Atlas | RNS,ROS | TAG, LENS |
| **Appointment Scheduling** | | |
| DSAP | RNS, ROS | TAG, LENS |
| **CSR Data** | | |
| CRSACCTS | RNS | |
| CRSOCSR | ROS | |
| CRSECSRL | | LENS |
| TAG-CSR | | TAG |
| **Service/Feature Availability** | | |
| OASISBIG | RNS, ROS | |
| PSIMS/ORB, COFFI | | LENS, TAG |

# OSS-2: Interface Availability (Pre-Ordering/Ordering)

## Definition

Percent of time OSS interface is functionally available compared to scheduled availability. Availability percentages for CLEC interface systems and for all Legacy systems accessed by them are captured. ("Functional Availability" is the amount of time in hours during the reporting period that the legacy systems are available to users. The planned System Scheduled Availability is the time in hours per day that the legacy system is scheduled to be available.)

Scheduled availability is posted on the ICS Operations internet site: (www.interconnection.bellsouth.com/oss/osshour.html)

## Exclusions

None

## Business Rules

This measurement captures the functional availability of applications/interfaces as a percentage of scheduled availability for the same systems. Only full outages are included in the calculation for this measure. Full outages are defined as occurrences of either of the following:

- Application/Interface application is down or totally inoperative.
- Application is totally inoperative for customers attempting to access or use the application. This includes transport outages when they may be directly associated with a specific application.

Comparison to an internal benchmark provides a vehicle for determining whether or not CLECs and retail BellSouth entities are given comparable opportunities for use of pre-ordering and ordering systems.

(Note: Scheduled maintenance will not be performed between the hours of 8:00 a.m through 9:00 p.m. Monday through Friday.)

## Calculation

**Interface Availability (Pre-Ordering/Ordering)** = (a ÷ b) X 100

- a = Functional Availability
- b = Scheduled Availability

## Report Structure

- Interface Type
- Not CLEC Specific
- Not product/service specific
- Regional Level

## Data Retained

| Relating to CLEC Experience | Relating to BellSouth Performance |
|---|---|
| Report Month<br>• Legacy Contract Type (per reporting dimension)<br>• Regional Scope<br>• Hours of Downtime | Report Month<br>• Legacy Contract Type (per reporting dimension)<br>• Regional Scope<br>• Hours of Downtime |

## SQM Disaggregation - Analog/Benchmark

| SQM Level of Disaggregation | SQM Analog/Benchmark |
|---|---|
| • Regional Level | • ≥ 99.5% |

## OSS Interface Availability

| OSS Interface | Applicable to | % Availability |
|---|---|---|
| EDI | CLEC | x |
| | | |
| LENS | CLEC | x |
| LEO | CLEC | x |
| | | |
| LESOG | CLEC | x |
| PSIMS | CLEC | x |
| TAG | CLEC | x |
| LNP Gateway | CLEC | x |
| COG | CLEC | x |
| SOG | CLEC | x |
| DOM | CLEC | x |
| DOE | CLEC/BellSouth | x |
| CRIS | CLEC/BellSouth | x |
| ATLAS/COFFI | CLEC/BellSouth | x |
| BOCRIS | CLEC/BellSouth | x |
| DSAP | CLEC/BellSouth | x |
| RSAG | CLEC/BellSouth | x |
| SOCS | CLEC/BellSouth | x |
| SONGS | CLEC/BellSouth | x |
| RNS | BellSouth | x |
| ROS | BellSouth | x |

## SEEM Measure

| SEEM Measure | | |
|---|---|---|
| Yes | Tier I | |
| | Tier II | X |

## SEEM Disaggregation - Analog/Benchmark

| SEEM Disaggregation | SEEM Analog/Benchmark |
|---|---|
| • Regional Level | • ≥ 99.5% |

## SEEM OSS Interface Availability

| OSS Interface | Applicable to | % Availability |
|---|---|---|
| EDI | CLEC | x |
| LENS | CLEC | x |
| LEO | CLEC | x |
| LESOG | CLEC | x |
| PSIMS | CLEC | x |

| OSS Interface | Applicable to | % Availability |
|---|---|---|
| TAG | CLEC | x |
| LNP Gateway | CLEC | x |
| COG | CLEC | x |
| SOG | CLEC | x |
| DOM | CLEC | x |

# OSS-3: Interface Availability (Maintenance & Repair)

## Definition

This measures the percentage of time the OSS Interface is functionally available compared to scheduled availability. Availability percentage for the CLEC and BellSouth interface systems and for the legacy systems accessed by them are captured.

Scheduled availability is posted on the ICS Operations internet site: (www.interconnection.bellsouth.com/oss/osshour.html)

## Exclusions

None

## Business Rules

This measure is designed to compare the OSS availability versus scheduled availability of BellSouth's legacy systems.

**Note**: Only full outages are used in the calculation of Application Availability. A full outage is incurred when any of the following circumstances exists:

- The application or system is down.
- The application or system is inaccessible, for any reason, by the customers who normally access the application or system.
- More than one work center cannot access the application or system for any reason.
- When only one work center accesses an application or system and 40% or more of the clients in that work center cannot access the application.
- When 40% of the functions the clients normally perform or 40% of the functionality that is normally provided by an application or system is unavailable.

(Note: Scheduled maintenance will not be performed between the hours of 8:00 a.m through 9:00 p.m. Monday through Friday.)

## Calculation

**OSS Interface Availability** (a ÷ b) X 100

- a = Functional Availability
- b = Scheduled Availability

## Report Structure

- Interface Type
- Not CLEC Specific
- Not product/service specific
- Regional Level

## Data Retained

| Relating to CLEC Experience | Relating to BellSouth Performance |
|---|---|
| • Availability of CLEC TAFI<br>• Availability of LMOS HOST, MARCH, SOCS, CRIS, PREDICTOR, LNP and OSPCM<br>• ECTA | • Availability of BellSouth TAFI<br>• Availability of LMOS HOST, MARCH, SOCS, CRIS, PREDICTOR, LNP and OSPCM |

## SQM Disaggregation - Analog/Benchmark

| SQM Level of Disaggregation | SQM Analog/Benchmark |
|---|---|
| • Regional Level | • ≥ 99.5% |

## OSS Interface Availability (M&R)

| OSS Interface | % Availability |
|---|---|
| BellSouth TAFI | x |
| CLEC TAFI | x |
| CLEC ECTA | x |
| **BellSouth & CLEC** | x |
| CRIS | x |
| LMOS HOST | x |
| LNP | x |
| MARCH | x |
| OSPCM | x |
| PREDICTOR | x |
| SOCS | x |

## SEEM Measure

| SEEM Measure | | |
|---|---|---|
| Yes | Tier I | |
| | Tier II | X |

## SEEM Disaggregation - Analog/Benchmark

| SEEM Disaggregation | SEEM Analog/Benchmark |
|---|---|
| • Regional Level | • ≥ 99.5% |

## OSS Interface Availability (M&R)

| OSS Interface | % Availability |
|---|---|
| CLEC TAFI | x |
| CLEC ECTA | x |

# OSS-4: Response Interval (Maintenance & Repair)

## Definition

The response intervals are determined by subtracting the time a request is received on the BellSouth side of the interface from the time the response is received from the legacy system. Percentages of requests falling into each interval category are reported, along with the actual number of requests falling into those categories.

## Exclusions

None

## Business Rules

This measure is designed to monitor the time required for the CLEC and BellSouth interface system to obtain from BellSouth's legacy systems the information required to handle maintenance and repair functions. The clock starts on the date and time when the request is received on the BellSouth side of the interface and the clock stops when the response has been transmitted through that same point to the requester.

**Note:** The OSS Response Interval BellSouth Total Report is a combination of BellSouth Residence and Business Total.

## Calculation

**OSS Response Interval** = (a - b)

- a = Query Response Date and Time
- b = Query Request Date and Time

**Percent Response Interval** (per category) = (c ÷ d) X 100

- c = Number of Response Intervals in category "X"
- d = Number of Queries Submitted in the Reporting Period

where, "X" is $\leq 4$, $> 4 \leq 10$, $\leq 10$, $> 10$, or $> 30$ seconds.

**Average Interval** = (e ÷ f)

- e = Sum of Response Intervals
- f = Number of Queries Submitted in the Reporting Period

## Report Structure

- Not CLEC Specific
- Not product/service specific
- Regional Level

## Data Retained

| Relating to CLEC Experience | Relating to BellSouth Performance |
|---|---|
| • CLEC Transaction Intervals | • BellSouth Business and Residential Transactions Intervals |

## SQM Disaggregation - Analog/Benchmark

| SQM Level of Disaggregation | SQM Analog/Benchmark |
|---|---|
| • Regional Level | • Average Interval |

## Legacy System Access Times for M&R

| System | BellSouth & CLEC | Count | | | | | |
|---|---|---|---|---|---|---|---|
| | | ≤ 4 | > 4 ≤ 10 | ≤ 10 | > 10 | > 30 | Avg. Int. |
| CRIS | x | x | x | x | x | x | x |
| DLETH | x | x | x | x | x | x | x |
| DLR | x | x | x | x | x | x | x |
| LMOS | x | x | x | x | x | x | x |
| LMOSupd | x | x | x | x | x | x | x |
| LNP | x | x | x | x | x | x | x |
| MARCH | x | x | x | x | x | x | x |
| OSPCM | x | x | x | x | x | x | x |
| Predictor | x | x | x | x | x | x | x |
| SOCS | x | x | x | x | x | x | x |
| NIW | x | x | x | x | x | x | x |

## SEEM Measure

| SEEM Measure | | |
|---|---|---|
| Yes | Tier I | |
| | Tier II | X |

## SEEM Disaggregation - Analog/Benchmark

| SEEM Disaggregation | SEEM Analog/Benchmark |
|---|---|
| • Region | • Average Interval |

# PO-1: Loop Makeup - Response Time – Manual

## Definition

This report measures the average interval and percent within the interval from the submission of a Manual Loop Makeup Service Inquiry (LMUSI) to the distribution of Loop Makeup information back to the CLEC.

## Exclusions

- Inquiries, which are submitted electronically.
- Designated Holidays are excluded from the interval calculation.
- Weekends are excluded from the interval calculation.
- Canceled Inquiries

## Business Rules

The CLEC Manual Loop Makeup Service Inquiry (LMUSI) process includes inquiries submitted via mail or FAX to BellSouth's Complex Resale Support Group (CRSG)

This measurement combines three intervals:

1. From receipt of a valid Service Inquiry for Loop Makeup to hand off to the Service Advocacy Center (SAC) for "Look-up."
2. From SAC start date to SAC complete date
3. From SAC complete date to date the Complex Resale Support Group (CRSG) distributes loop makeup information back to the CLEC.

The "Receive Date" is defined as the date the Manual LMUSI is received by the CRSG. It is counted as day Zero. LMU "Return Date" is defined as the date the LMU information is sent back to the CLEC from BellSouth. The interval calculation is reset to Zero when a CLEC initiated change occurs on the Manual LMU request.

**Note**: The Loop Make Up Service Inquiry Form does not require the CLEC to furnish the type of Loop. The CLEC determines whether the loop makeup will support the type of service they wish to order or not and qualifies the loop. If the loop makeup will support the service, a firm order LSR is submitted by the CLEC.

(A valid Service Inquiry is an inquiry that has all required fields populated correctly and has not been returned for clarification.)

## Calculation

**Response Interval** = (a - b)

- a = Date the LMUSI returned to CLEC
- b = Date the LMUSI is received

**Average Interval** = (c ÷ d)

- c = Sum of all Response Intervals
- d = Total Number of LMUSIs received within the reporting period

**Percent within interval** = (e ÷ f) X 100

- e = Total LMUSIs received within the interval
- f = Total Number of LMUSIs processed within the reporting period

## Report Structure

- CLEC Aggregate
- CLEC Specific
- Geographic Scope
  - State
  - Region
- Interval for manual LMUs:
  0 – ≤ 1 day
  >1 – ≤ 2 days
  >2 – ≤ 3 days

0 - ≤ 3 days
>3 – ≤ 6 days
>6 – ≤ 10 days
> 10 days
- Average Interval in days

## Data Retained

| Relating to CLEC Experience | Relating to BellSouth Performance |
|---|---|
| • Report Month<br>• Total Number of Inquiries<br>• SI Intervals<br>• State and Region | |

## SQM Disaggregation - Analog/Benchmark

| SQM Level of Disaggregation | SQM Analog/Benchmark |
|---|---|
| • Loops | Benchmark<br>• 95% ≤ 3 Business Days |

## SEEM Measure

| SEEM Measure | | |
|---|---|---|
| Yes | Tier I | |
| | Tier II | X |

## SEEM Disaggregation - Analog/Benchmark

| SEEM Disaggregation | SEEM Analog/Benchmark |
|---|---|
| • Loops | Benchmark<br>• 95% ≤ 3 Business Days |

# PO-2: Loop Make Up - Response Time - Electronic



## Definition

This report measures the average interval and the percent within the interval from the electronic submission of a Loop Makeup Service Inquiry (LMUSI) to the distribution of Loop Makeup information back to the CLEC.

## Exclusions

- Manually submitted inquiries.
- Designated Holidays are excluded from the interval calculation.
- Canceled Requests.

## Business Rules

The response interval starts when the CLEC's Mechanized Loop Makeup Service Inquiry (LMUSI) is submitted electronically through the Operational Support Systems interface, LENS, TAG or RoboTAG. It ends when BellSouth's Loop Facility Assignment and Control System (LFACS) responds electronically to the CLEC with the requested Loop Makeup data via LENS, TAG or RoboTAG Interfaces.

**Note**: The Loop Make Up Service Inquiry Form does not require the CLEC to furnish the type of Loop. The CLEC determines whether the loop makeup will support the type of service they wish to order or not and qualifies the loop. If the loop makeup will support the service, a firm order LSR is submitted by the CLEC. EDI is not a pre-ordering system, and, therefore, is not applicable in this measure.

## Calculation

**Response Interval** = (a - b)

- a = Date and Time the LMUSI returned to CLEC
- b = Date and Time the LMUSI is received

**Average Interval** = (c ÷ d)

- c = Sum of all response intervals
- d = Total Number of LMUSIs received within the reporting period

**Percent within interval** = (e ÷ f) X 100

- e = Total LMUSIs received within the interval
- f = Total Number of LMUSIs processed within the reporting period

## Report Structure

- CLEC Aggregate
- CLEC Specific
- Geographic Scope
  - State
  - Region
- Interval for electronic LMUs:
  0 – ≤ 1 minute
  >1 – ≤ 5 minutes
  0 - ≤ 5 minutes
  > 5 – ≤ 8 minutes
  > 8 – ≤ 15 minutes
  > 15 minutes
- Average Interval in minutes

## Data Retained

| Relating to CLEC Experience | Relating to BellSouth Performance |
|---|---|
| • Report Month<br>• Legacy Contract<br>• Response Interval<br>• Regional Scope | • Not Applicable |

## SQM Disaggregation - Analog/Benchmark

| SQM Level of Disaggregation | SQM Analog/Benchmark |
|---|---|
| • Loop | Benchmark<br>• 95% ≤ 1 Minute |

## SEEM Measure

| SEEM Measure | | |
|---|---|---|
| Yes | Tier I | |
| | Tier II | X |

## SEEM Disaggregation - Analog/Benchmark

| SEEM Disaggregation | SEEM Analog/Benchmark |
|---|---|
| • Loop | • 95% ≤ 1 Minute |

# Section 2: Ordering

## O-1: Acknowledgement Message Timeliness

### Definition

This measurement provides the response interval from the time a Message/LSR is electronically submitted via EDI or TAG until an acknowledgement notice is sent by the system.

### Exclusions

None

### Business Rules

The process includes EDI & TAG system functional acknowledgements for all Local Service Requests (LSRs) which are electronically submitted by the CLEC. The start time is the receipt time of the LSR at BellSouth's side of the interface (gateway). The end time is when the acknowledgement is transmitted by BellSouth at BellSouth's side of the interface (gateway). For those CLECs using EDI, if more than one CLEC uses the same ordering center, an Acknowledgement Message will be returned to the "Aggregator", however, BellSouth will not be able to determine which specific CLEC this message represented.

### Calculation

**Response Interval** = (a - b)

- a = Date and Time Acknowledgement Notices returned to CLEC
- b = Date and Time Messages/LSRs electronically submitted by the CLEC via EDI or TAG respectively

**Average Response Interval** = (c ÷ d)

- c = Sum of all Response Intervals
- d = Total number of electronically submitted Messages/LSRs received, via EDI or TAG respectively, in the Reporting Period.

### Reporting Structure

- CLEC Aggregate
- CLEC Specific
- Geographic Scope
  - Region
- Electronically Submitted LSRs
  0 – ≤10 minutes
  > 10 – ≤20 minutes
  > 20 – ≤30 minutes
  0 – ≤ 30 minutes
  > 30 – ≤45 minutes
  > 45 – ≤60 minutes
  > 60 – ≤120 minutes
  > 120 minutes
- Average interval for electronically submitted LSRs in minutes

## Data Retained

| Relating to CLEC Experience | Relating to BellSouth Performance |
|---|---|
| • Report Month<br>• Record of Functional Acknowledgements | • Not Applicable |

## SQM Disaggregation - Analog/Benchmark

| SQM Level of Disaggregation | Retail Analog/Benchmark |
|---|---|
| • EDI | • EDI – 95% ≤ 30 Minutes |
| • TAG | • TAG – 95% ≤ 30 Minutes |

## SEEM Measure

| SEEM Measure | | |
|---|---|---|
| Yes | Tier I | X |
| | Tier II | X |

## SEEM Disaggregation - Analog/Benchmark

| SEEM Disaggregation | SEEM Analog/Benchmark |
|---|---|
| • EDI | • EDI – 95% ≤ 30 Minutes |
| • TAG | • TAG – 95% ≤ 30 Minutes |

# O-2: Acknowledgement Message Completeness

## Definition

This measurement provides the percent of Messages/LSRs received via EDI or TAG, which are acknowledged electronically.

## Exclusions

Manually submitted LSRs

## Business Rules

EDI and TAG send Functional Acknowledgements for all LSRs, which are electronically submitted by a CLEC. For those CLECs using EDI, if more than one CLEC uses the same ordering center, an Acknowledgement Message will be returned to the "Aggregator", however, BellSouth will not be able to determine which specific CLEC this message represented. The Acknowledgement Message is returned prior to the determination of whether the LSR will be partially mechanized or fully mechanized.

## Calculation

**Acknowledgement Completeness** = (a ÷ b) X 100

- a = Total number of Functional Acknowledgements returned in the reporting period for Messages/LSRs electronically submitted by EDI or TAG respectively
- b = Total number of electronically submitted Messages/LSRs received in the reporting period by EDI or TAG respectively

## Report Structure

- CLEC Aggregate
- CLEC Specific
- Geographic Scope
  - Region

**Note**: Acknowledgement message is generated before the system recognizes whether this message (LSR) will be partially or fully mechanized.

## Data Retained

| Relating to CLEC Experience | Relating to BellSouth Performance |
|---|---|
| • Report Month<br>• Record of functional acknowledgements | • Not Applicable |

## SQM Disaggregation - Analog/Benchmark

| SQM Level of Disaggregation | SQM Analog/Benchmark |
|---|---|
| • EDI<br>• TAG | • Benchmark: 100% |

## SEEM Measure

| SEEM Measure | | |
|---|---|---|
| Yes | Tier I | X |
| | Tier II | X |

## SEEM Disaggregation - Analog/Benchmark

| SEEM Disaggregation | SEEM Analog/Benchmark |
|---|---|
| • EDI<br>• TAG | • Benchmark: 100% |

# O-3: Percent Flow-Through Service Requests (Summary)

## Definition

The percentage of Local Service Requests (LSR) and LNP Local Service Requests (LNP LSRs) submitted electronically via the CLEC mechanized ordering process that flow through and reach a status for a FOC to be issued, without manual intervention.

## Exclusions

- Fatal Rejects
- Auto Clarification
- Manual Fallout for Percent Flow-Through only
- CLEC System Fallout

## Business Rules

The CLEC mechanized ordering process includes all LSRs, including supplements (subsequent versions) which are submitted through one of the three gateway interfaces (TAG, EDI and LENS), that flow through and reach a status for a FOC to be issued, without manual intervention. These LSRs can be divided into two classes of service: Business and Residence, and two types of service: Resale, and Unbundled Network Elements (UNE). The CLEC mechanized ordering process does not include LSRs which are submitted manually (for example, fax and courier) or are not designed to flow through (for example, Manual Fallout.)

**Definitions**:

**Fatal Rejects:** Errors that prevent an LSR, submitted electronically by the CLEC, from being processed further. When an LSR is submitted by a CLEC, LEO/LNP Gateway will perform edit checks to ensure the data received is correctly formatted and complete. For example, if the PON field contains an invalid character, LEO/LNP Gateway will reject the LSR and the CLEC will receive a Fatal Reject.

**Auto-Clarification:** Clarifications that occur due to invalid data within the LSR. LESOG/LAUTO will perform data validity checks to ensure the data within the LSR is correct and valid. For example, if the address on the LSR is not valid according to RSAG, or if the LNP is not available for the NPA NXXX requested, the CLEC will receive an Auto-Clarification.

**Manual Fallout:** Planned Fallout that occur by design. Certain LSRs are designed to fallout of the Mechanized Order Process due to their complexity. These LSRs are manually processed by the LCSC. When a CLEC submits an LSR, LESOG/LAUTO will determine if the LSR should be forwarded to LCSC for manual handling. Following are the categories for Manual Fallout:

1. Complex*
2. Special pricing plans
3. Some Partial migrations
4. New telephone number not yet posted to BOCRIS
5. Pending order review required
6. CSR inaccuracies such as invalid or missing CSR data in CRIS
7. Expedites (requested by the CLEC)
8. Denials-restore and conversion, or disconnect and conversion orders
9. Class of service invalid in certain states with some types of service
10. Low volume such as activity type "T" (move)
11. More than 25 business lines, or more than 15 loops
12. Transfer of calls option for the CLEC end users
13. Directory Listings (Indentions and Captions)

* See "LSR Flow-Through Matrix" on page 15. for a list of services, including complex services, and whether LSRs issued for the services are eligible to flow through.

**Total System Fallout:** Errors that require manual review by the LCSC to determine if the error is caused by the CLEC, or is due to BellSouth system functionality. If it is determined the error is caused by the CLEC, the LSR will be sent back to the CLEC for clarification. If it is determined the error is BellSouth caused, the LCSC representative will correct the error, and the LSR will continue to be processed.

**Z Status:** LSRs that receive a supplemental LSR submission prior to final disposition of the original LSR.

## Calculation

**Percent Flow Through** = a ÷ [b - (c + d + e + f)] X 100

- a = The total number of LSRs that flow through LESOG/LAUTO and reach a status for a FOC to be issued
- b = the number of LSRs passed from LEO/LNP Gateway to LESOG/LAUTO
- c = the number of LSRs that fall out for manual processing
- d = the number of LSRs that are returned to the CLEC for clarification
- e = the number of LSRs that contain errors made by CLECs
- f = the number of LSRs that receive a Z status.

**Percent Achieved Flow Through** = a ÷ [b-(c+d+e)] X 100

- a = the number of LSRs that flow through LESOG/LAUTO and reach a status for a FOC to be issued.
- b = the number of LSRs passed from LEO/LNP Gateway to LESOG/LAUTO
- c = the number of LSRs that are returned to the CLEC for clarification
- d = the number of LSRs that contain errors made by CLECs
- e = the number of LSRs that receive Z status

## Report Structure

- CLEC Aggregate
  - Region

## Data Retained

| Relating to CLEC Experience | Relating to BellSouth Performance |
|---|---|
| • Report Month<br>• Total Number of LSRs Received, by Interface, by CLEC<br>- TAG<br>- EDI<br>- LENS<br>• Total Number of Errors by Type, by CLEC<br>- Fatal Rejects<br>- Auto Clarification<br>- CLEC Caused System Fallout<br>• Total Number of Errors by Error Code<br>• Total Fallout for Manual Processing | • Report Month<br>• Total Number of Errors by Type<br>- BellSouth System Error |

## SQM Disaggregation - Analog/Benchmark

| SQM Level of Disaggregation | SQM Analog/Benchmark[a] |
|---|---|
| • Residence | • Benchmark: 95% |
| • Business | • Benchmark: 90% |
| • UNE | • Benchmark: 85% |
| • LNP | • Benchmark: 85% |

*a. Benchmarks do not apply to the "Percent Achieved Flow Through."*

## SEEM Measure

| SEEM Measure | | |
|---|---|---|
| Yes | Tier I | |
| | Tier II | X |

## SEEM Disaggregation - Analog/Benchmark

| SEEM Disaggregation | SEEM Analog/Benchmark[a] |
|---|---|
| • Residence | • Benchmark: 95% |
| • Business | • Benchmark: 90% |
| • UNE | • Benchmark: 85% |
| • LNP | • Benchmark: 85% |

*a. Benchmarks do not apply to the "Percent Achieved Flow Through."*

# O-4: Percent Flow-Through Service Requests (Detail)

## Definition

A detailed list, by CLEC, of the percentage of Local Service Requests (LSR) and LNP Local Service Requests (LNP LSRs) submitted electronically via the CLEC mechanized ordering process that flow through and reach a status for a FOC to be issued, without manual or human intervention.

## Exclusions

- Fatal Rejects
- Auto Clarification
- Manual Fallout for Percent Flow-Through only
- CLEC System Fallout

## Business Rules

The CLEC mechanized ordering process includes all LSRs, including supplements (subsequent versions) which are submitted through one of the three gateway interfaces (TAG, EDI, and LENS), that flow through and reach a status for a FOC to be issued, without manual intervention. These LSRs can be divided into two classes of service: Business and Residence, and two types of service: Resale, and Unbundled Network Elements (UNE). The CLEC mechanized ordering process does not include LSRs, which are submitted manually (for example, fax and courier) or are not designed to flow through (for example, Manual Fallout.)

**Definitions**:

**Fatal Rejects:** Errors that prevent an LSR, submitted electronically by the CLEC, from being processed further. When an LSR is submitted by a CLEC, LEO/LNP Gateway will perform edit checks to ensure the data received is correctly formatted and complete. For example, if the PON field contains an invalid character, LEO/LNP Gateway will reject the LSR and the CLEC will receive a Fatal Reject.

**Auto-Clarification:** Clarifications that occur due to invalid data within the LSR. LESOG/LAUTO will perform data validity checks to ensure the data within the LSR is correct and valid. For example, if the address on the LSR is not valid according to RSAG, or if the LNP is not available for the NPA NXXX requested, the CLEC will receive an Auto-Clarification.

**Manual Fallout:** Planned Fallout that occur by design. Certain LSRs are designed to fallout of the Mechanized Order Process due to their complexity. These LSRs are manually processed by the LCSC. When a CLEC submits an LSR, LESOG/LAUTO will determine if the LSR should be forwarded to LCSC for manual handling. Following are the categories for Manual Fallout:

1. Complex*
2. Special pricing plans
3. Some Partial migrations
4. New telephone number not yet posted to BOCRIS
5. Pending order review required
6. CSR inaccuracies such as invalid or missing CSR data in CRIS
7. Expedites (requested by the CLEC)
8. Denials-restore and conversion, or disconnect and conversion orders
9. Class of service invalid in certain states with some types of service
10. Low volume such as activity type "T" (move)
11. More than 25 business lines, or more than 15 loops
12. Transfer of calls option for the CLEC end users
13. Directory Listings (Indentions and Captions)

* See "LSR Flow-Through Matrix" on page 15. for a list of services, including complex services, and whether LSRs issued for the services are eligible to flow through.

**Total System Fallout:** Errors that require manual review by the LCSC to determine if the error is caused by the CLEC, or is due to BellSouth system functionality. If it is determined the error is caused by the CLEC, the LSR will be sent back to the CLEC for clarification. If it is determined the error is BellSouth caused, the LCSC representative will correct the error, and the LSR will continue to be processed.

**Z Status:** LSRs that receive a supplemental LSR submission prior to final disposition of the original LSR.

## Calculation

**Percent Flow Through** = a ÷ [b - (c + d + e + f)] X 100

- a = The total number of LSRs that flow through LESOG/LAUTO and reach a status for a FOC to be issued
- b = the number of LSRs passed from LEO/LNP Gateway to LESOG/LAUTO
- c = the number of LSRs that fall out for manual processing
- d = the number of LSRs that are returned to the CLEC for clarification
- e = the number of LSRs that contain errors made by CLECs
- f = the number of LSRs that receive a Z status.

**Percent Achieved Flow Through** = a ÷ [b-(c+d+e)] X 100

- a = the number of LSRs that flow through LESOG/LAUTO and reach a status for a FOC to be issued.
- b = the number of LSRs passed from LEO/LNP Gateway to LESOG/LAUTO
- c = the number of LSRs that are returned to the CLEC for clarification
- d = the number of LSRs that contain errors made by CLECs
- e = the number of LSRs that receive Z status

## Report Structure

Provides the flow through percentage for each CLEC (by alias designation) submitting LSRs through the CLEC mechanized ordering process. The report provides the following:

- CLEC (by alias designation)
- Number of fatal rejects
- Mechanized interface used
- Total mechanized LSRs
- Total manual fallout
- Number of auto clarifications returned to CLEC
- Number of validated LSRs
- Number of BellSouth caused fallout
- Number of CLEC caused fallout
- Number of Service Orders Issued
- Base calculation
- CLEC error excluded calculation

## Data Retained

| Relating to CLEC Experience | Relating to BellSouth Performance |
|---|---|
| • Report Month<br>• Total Number of Lsrs Received, by Interface, by CLEC<br>- TAG<br>- EDI<br>- LENS<br>• Total Number of Errors by Type, by CLEC<br>- Fatal Rejects<br>- Auto Clarification<br>- CLEC Errors<br>• Total Number of Errors by Error Code<br>• Total Fallout for Manual Processing | • Report Month<br>• Total Number of Errors by Type<br>- BellSouth System Error |

## SQM Disaggregation - Analog/Benchmark

| SQM Level of Disaggregation | SQM Analog/Benchmark[a] |
|---|---|
| • Residence | • Benchmark: 95% |
| • Business | • Benchmark: 90% |
| • UNE | • Benchmark: 85% |

| SQM Level of Disaggregation | SQM Analog/Benchmark[a] |
|---|---|
| • LNP | • Benchmark: 85% |

*a. Benchmarks do not apply to the "Percent Achieved Flow Through."*

## SEEM Measure

| SEEM Measure | | |
|---|---|---|
| Yes | Tier I | X |
| | Tier II | |

## SEEM Disaggregation - Analog/Benchmark

| SEEM Disaggregation | SEEM Analog/Benchmark |
|---|---|
| • Residence | • Benchmark: 95% |
| • Business | • Benchmark: 90% |
| • UNE | • Benchmark: 85% |
| • LNP | • Benchmark: 85% |

# O-5: Flow-Through Error Analysis

## Definition

An analysis of each error type (by error code) that was experienced by the LSRs that did not flow through or reached a status for a FOC to be issued.

## Exclusions

Each Error Analysis is error code specific, therefore exclusions are not applicable.

## Business Rules

The CLEC mechanized ordering process includes all LSRs, including supplements (subsequent versions) which are submitted through one of the three gateway interfaces (TAG, EDI, and LENS), that flow through and reach a status for a FOC to be issued. The CLEC mechanized ordering process does not include LSRs which are submitted manually (for example, fax and courier).

## Calculation

Total for each error type.

## Report Structure

Provides an analysis of each error type (by error code). The report is in descending order by count of each error code and provides the following:

- Error Type (by error code)
- Count of each error type
- Percent of each error type
- Cumulative percent
- Error Description
- CLEC Caused Count of each error code
- Percent of aggregate by CLEC caused count
- Percent of CLEC caused count
- BellSouth Caused Count of each error code
- Percent of aggregate by BellSouth caused count
- Percent of BellSouth by BellSouth caused count.

## Data Retained

| Relating to CLEC Experience | Relating to BellSouth Performance |
|---|---|
| • Report Month<br>• Total Number of Lsrs Received<br>• Total Number of Errors by Type (by Error Code)<br>- CLEC caused error | • Report Month<br>• Total Number of Errors by Type (by Error Code)<br>- BellSouth System Error |

## SQM Disaggregation - Analog/Benchmark

| SQM Level of Disaggregation | SQM Analog/Benchmark |
|---|---|
| • Not Applicable | • Not Applicable |

## SEEM Measure

| SEEM Measure | | |
|---|---|---|
| No | Tier I | |
| | Tier II | |

## SEEM Disaggregation - Analog/Benchmark

| SEEM Disaggregation | SEEM Analog/Benchmark |
|---|---|
| • Not Applicable | • Not Applicable |

# O-6: CLEC LSR Information

**Definition**

A list with the flow through activity of LSRs by CC, PON and Ver, issued by each CLEC during the report period.

## Exclusions

- Fatal Rejects
- LSRs submitted manually

## Business Rules

The CLEC mechanized ordering process includes all LSRs, including supplements (subsequent versions) which are submitted through one of the three gateway interfaces (TAG, EDI, and LENS), that flow through and reach a status for a FOC to be issued. The CLEC mechanized ordering process does not include LSRs which are submitted manually (for example, fax and courier).

## Calculation

Not Applicable

## Report Structure

Provides a list with the flow through activity of LSRs by CC, PON and Ver, issued by each CLEC during the report period with an explanation of the of the columns and content. This report is available on a CLEC specific basis. The report provides the following for each LSR.

- CC
- PON
- Ver
- Timestamp
- Type
- Err #
- Note or Error Description

## Data Retained

| Relating to CLEC Experience | Relating to BellSouth Performance |
|---|---|
| • Report Month<br>• Record of LSRs Received by CC, PON and Ver<br>• Record of Timestamp, Type, Err # and Note or Error Description for Each LSR by CC, PON and Ver | • Not Applicable |

## SQM Disaggregation - Analog/Benchmark

| SQM Level of Disaggregation | SQM Analog/Benchmark |
|---|---|
| • Not Applicable | • Not Applicable |

## SEEM Measure

| SEEM Measure | | |
|---|---|---|
| No | Tier I | |
| | Tier II | |

## SEEM Disaggregation - Analog/Benchmark

| SEEM Disaggregation | SEEM Analog/Benchmark |
|---|---|
| • Not Applicable | • Not Applicable |

# LSR Flow Through Matrix

| | Product Type | Reqtype | ACT Type | F/T[3] | Complex Service | Complex Order | Planned Fallout For Manual Handling[1] | EDI | TAG[2] | LENS[4] |
|---|---|---|---|---|---|---|---|---|---|---|
| 2 wire analog DID trunk port | U,C | A | N,T | No | UNE | Yes | NA | N | N | N |
| 2 wire analog port | U | A | N,T | No | UNE | No | Yes | Y | Y | N |
| 2 wire ISDN digital line | U,C | A | N,T | No | UNE | Yes | NA | N | N | N |
| 2 wire ISDN digital loop | U,C | A | N,T | Yes | UNE | Yes | No | Y | Y | N |
| 3 Way Calling | R,B | E,M | N,C,T,V,W | Yes | No | No | No | Y | Y | Y |
| 4 wire analog voice grade loop | U,C | A | N,T | Yes | UNE | Yes | No | Y | Y | N |
| 4 wire DSO & PRI digital loop | U,C | A | N,T | No | UNE | Yes | NA | N | N | N |
| 4 wire DS1 & PRI digital loop | U,C | A | N,T | No | UNE | Yes | NA | N | N | N |
| 4 wire ISDN DSI digital trunk ports | U,C | A | N,T | No | UNE | Yes | NA | N | N | N |
| Accupulse | C | E | N,C,T,V,W | No | Yes | Yes | NA | N | N | N |
| ADSL | R,B,C | E | V,W | No | UNE | No | No | Y | Y | N |
| Area Plus | R,B | E,M | N,C,T,V,W | Yes | No | No | No | Y | Y | Y |
| Basic Rate ISDN | U,C | A | N,T | No | Yes | Yes | Yes | Y | Y | N |
| Basic Rate ISDN 2 Wire | C | E | C, D,T,V,W | No | Yes | Yes | Yes | Y | Y | N |
| Basic Rate ISDN 2 Wire | C | E | N,T | No | Yes | Yes | N/A | N | N | N |
| Basic Rate ISDN 2 Wire UNE P | C | M | N,C,D,V | No | YES | Yes | N/A | N | N | N |
| Analog Data/Private Line | C | E | N, C, T, V, W, D, P, Q | No | Yes | Yes | N/A | N | N | N |
| Call Block | R,B | E,B,M | N,C,T,V,W | Yes | No | No | No | Y | Y | Y |
| Call Forwarding | R,B | E,B,M | N,C,T,V,W | Yes | No | No | No | Y | Y | Y |
| Call Return | R,B | E,B,M | N,C,T,V,W | Yes | No | No | No | Y | Y | Y |
| Call Selector | R,B | E,B,M | N,C,T,V,W | Yes | No | No | No | Y | Y | Y |
| Call Tracing | R,B | E,B,M | N,C,T,V,W | Yes | No | No | No | Y | Y | Y |
| Call Waiting | R,B | E,B,M | N,C,T,V,W | Yes | No | No | No | Y | Y | Y |
| Call Waiting Deluxe | R,B | E,B,M | N,C,T,V,W | Yes | No | No | No | Y | Y | Y |
| Caller ID | R,B | E,B,M | N,C,T,V,W | Yes | No | No | No | Y | Y | Y |
| CENTREX | C | P | V,P | No | Yes | Yes | NA | N | N | N |
| DID ACT W | C | N | W | No | Yes | Yes | Yes | Y | Y | Y |
| Digital Data Transport | U | E | N,C,T,V,W | No | UNE | Yes | NA | N | N | N |
| Directory Listing Indentions | B,U | B,C,E,F, J,M,N | N,C,T,R,V,W,P,Q | No | No | No | Yes | Y | Y | Y |
| Directory Listings Captions | R,B,U | B,C,E,F, J,M,N | N,C,T,R,V,W,P,Q | No | No | Yes | Yes | Y | Y | Y |
| Directory Listings (simple) | R,B,U | B,C,E,F, J,M,N | N,C,T,R,V,W,P,Q | Yes | No | No | No | Y | Y | Y |
| DS3 | U | A,M | N,C,V | No | UNE | Yes | NA | N | N | N |
| DS1Loop | U | A,M | N,C,V | Yes | UNE | Yes | No | Y | Y | N |
| DSO Loop | U | A, B | N,C,D,T,V | Yes | UNE | Yes | No | Y | Y | N |
| Enhanced Caller ID | R,B | E,M | C,D,N,T,V,W | Yes | No | No | No | Y | Y | Y |

| | Product Type | Reqtype | ACT Type | F/T[3] | Complex Service | Complex Order | Planned Fallout For Manual Handling[1] | EDI | TAG[2] | LENS[4] |
|---|---|---|---|---|---|---|---|---|---|---|
| ESSX | C | P | C,D,T,V,S,B,W,L,P,Q | No | Yes | Yes | NA | N | N | N |
| Flat Rate/Business | B | E, M | C,D,N,T,V,W | Yes | No | No | No | Y | Y | Y |
| Flat Rate/Residence | R | E, M | C,D,N,T,V,W | Yes | No | No | No | Y | Y | Y |
| FLEXSERV | C | E | N,C,D,T,V,W,P,Q | No | Yes | Yes | NA | N | N | N |
| Frame Relay | C | E | N,C,D,V,W | No | Yes | Yes | NA | N | N | N |
| FX | C | E | N,C,D,T,V,W,P,Q | No | Yes | Yes | NA | N | N | N |
| Ga. Community Calling | R,B | E, M | C,D,N,T,V,W | Yes | No | No | No | Y | Y | Y |
| HDSL | U | A | N,C,D | Yes | UNE | No | No | Y | Y | N |
| Hunting MLH | R,B | E, M | C,D,N,T,V,W | No | C/S4 | C/S | Yes | Y | Y | N |
| Hunting Series Completion | R,B | E, M | C,D,N,T,V,W | Yes | C/S | C/S | No | Y | Y | Y |
| INP to LNP Conversion | U | C | C | No | UNE | Yes | Yes | Y | Y | N |
| LightGate | C | E | N,C,D,T,V,W,P,Q | No | Yes | Yes | NA | N | N | N |
| Line Sharing | U | A | C,D | Yes | UNE | No | No | Y | Y | Y |
| Local Number Portability | U | C | C,D,P,V,Q | Yes | UNE | Yes | No | Y | Y | N |
| LNP With Complex Listing | C | C | P,V,Q,W | No | UNE | Yes | Yes | Y | Y | N |
| LNP with Partial Migration | U | C | D,P,V,Q | No | UNE | Yes | Yes | Y | Y | N |
| LNP with Complex Services | C | C | P,V,Q,W | No | UNE | Yes | Yes | Y | Y | N |
| Loop+INP | U | B | D,P,V,Q | Yes | UNE | No | No | Y | Y | N |
| Loop+LNP | U | B | C,D,N,V | Yes | UNE | No | No | Y | Y | N |
| Measured Rate/Bus | R,B | E,M | C,D,T,N,V,W | Yes | No | No | No | Y | Y | Y |
| Measured Rate/Res | R,B | E,M | C,D,T,N,V,W | Yes | No | No | No | Y | Y | Y |
| Megalink | C | E | N,V,W,T,D,C,P,Q | No | Yes | Yes | NA | N | N | N |
| Megalink-T1 | C | E,M | N,V,W,T,D,C,P,Q | No | Yes | Yes | NA | N | N | N |
| Memory Call | R,B | E, M | C,D,N,T,V,W | Yes | No | No | No | Y | Y | Y |
| Memory Call Ans. Svc. | R,B | E, M | C,D,N,T,V,W | Yes | No | No | No | Y | Y | Y |
| Multiserv | C | P | N,C,D,T,V,S,B,W,L,P,Q | No | Yes | Yes | NA | N | N | N |
| Native Mode LAN Interconnection (NMLI) | C | E | N,C,D,V,W | No | Yes | Yes | NA | N | N | N |
| Off-Prem Stations | C | E | N,C,D,V,W,T,P,Q | No | Yes | Yes | NA | N | N | N |
| Optional Calling Plan | R,B | E, M | N | Yes | No | No | No | Y | Y | Y |
| Package/Complete Choice and Area Plus | R,B | E, M | N,T,C,V,W | Yes | No | No | No | Y | Y | Y |
| Pathlink Primary Rate ISDN | C | E | N,C,D,T,V,W,P,Q | No | Yes | Yes | NA | N | N | N |
| Pay Phone Provider | B | E | C,D,T,N,V,W | No | No | No | NA | N | N | N |
| PBX Standalone Port | C | F | N,C,D | No | Yes | Yes | Yes | Y | Y | N |
| PBX Trunks | R,B | E | N,C,D,V,W,T,P,Q | No | Yes | Yes | Yes | Y | Y | N |
| Port/Loop PBX | U | M | A,C,D,V | No | No | No | Yes | Y | Y | N |
| Port/Loop Simple | U | M | A,C,D,V | Yes | No | No | Yes | Y | Y | Y |
| Preferred Call Forward | R,B,U | E | C,D,T,N,V,W | Yes | No | No | No | Y | Y | Y |
| RCF Basic | R,B | E | N,D,W,T,F | Yes | No | No | No | Y | Y | Y |

| | Product Type | Reqtype | ACT Type | F/T[3] | Complex Service | Complex Order | Planned Fallout For Manual Handling[1] | EDI | TAG[2] | LENS[4] |
|---|---|---|---|---|---|---|---|---|---|---|
| Remote Access to CF | R,B | E,M | C,D,T,N,V,W | Yes | No | No | No | Y | Y | Y |
| Repeat Dialing | R,B | E,M | C,D,T,N,V,W | Yes | No | No | No | Y | Y | Y |
| Ringmaster | R,B | E,M | C,D,T,N,V,W | Yes | No | No | No | Y | Y | Y |
| Smartpath | R,B | E | C,D,T,N,V,W | No | Yes | Yes | NA | N | N | N |
| SmartRING | C | E | N,D,C,V,W | No | Yes | Yes | NA | N | N | N |
| Speed Calling | R,B | E | C,D,T,N,V,W | Yes | No | No | No | Y | Y | Y |
| Synchronet | C | E | N | Yes | Yes | Yes | Yes | Y | Y | N |
| Tie Lines | C | E | N,C,D,V,W,T,P,Q | No | Yes | Yes | NA | N | N | N |
| Touchtone | R,B | E | C,D,T,N,V,W | Yes | No | No | No | Y | Y | Y |
| Unbundled Loop-Analog 2W, SL1, SL2 | U | A,B | C,D,T,N,V,W | Yes | UNE | No | No | Y | Y | Y |
| WATS | R,B | E | W,D | No | Yes | Yes | NA | N | N | N |
| XDSL | C,U | A,B | N,T,C,V,D | Yes | UNE | No | No | Y | Y | N |
| XDSL Extended LOOP | C,U | A,B | N,T,C,V,D | No | UNE | Yes | NA | N | N | N |
| Collect Call Block | R,B | E | N,T,C,V,W,D | Yes | No | No | No | Y | Y | Y |
| 900 Call Block | R,B | E | N,T,C,V,W,D | Yes | No | No | No | Y | Y | Y |
| 3rd Party Call Block | R,B | E | N,T,C,V,W,D | Yes | No | No | No | Y | Y | Y |
| Three Way Call Block | R,B | E | N,T,C,V,W,D | Yes | No | No | No | Y | Y | Y |
| PIC/LPIC Change | R,B | E | T,C,V, | Yes | No | No | No | Y | Y | Y |
| PIC/LPIC Freeze | R,B | E | N,T,C,V | Yes | No | No | No | Y | Y | Y |

**Note[1]**: Planned Fallout for Manual Handling denotes those services that are electronically submitted and are not intended to flow through due to the complexity of the service.

**Note[2]**: The TAG column includes those LSRs submitted via Robo TAG.

**Note[3]**: For all services that indicate 'No' for flow-through, the following reasons, in addition to errors or complex services, also prompt manual handling: Expedites from CLECs, special pricing plans, denials – restore and conversion or disconnect and conversion both required, partial migrations (although conversions-as-is flow through), class of service invalid in certain states with some TOS – e.g. government, or cannot be changed when changing main TN on C activity, low volume – e.g. activity type T=move, pending order review required, more than 25 business lines, CSR inaccuracies such as invalid or missing CSR data in CRIS, Directory listing indentions and captions, transfer of calls option for CLEC end user – new TN not yet posted to BOCRIS. Many are unique to the CLEC environment.

**Note[4]**: Services with C/S in the Complex Service and/or the Complex Order columns can be either complex or simple.

**Note[5]:** EELs are manually ordered.

**Note[6]**: LSRs submitted for Resale Products and Services for which there is a temporary promotion or discount plan will be processed identically to those LSRs ordering the same Products or Services without a promotion or discount plan.

***Note**: The Flow Through Matrix is continually being updated and expanded with additional information about the listed products and services. BellSouth will not change any "Yes" designation to "No" without commission approval. The most current pre-approved matrix will be posted to the PMAP web site (www.pmap.bellsouth.com).*

# O-7: Percent Rejected Service Requests

## Definition

Percent Rejected Service Request is the percent of total Service Requests [(Local Service Requests (LSRs) or Access Service Requests (ASRs)] received which are rejected due to error or omission. Service Requests are considered valid when they are submitted by the CLEC and pass edit checks to insure the data received is correctly formatted and complete.

## Exclusions

- Service Requests canceled by the CLEC prior to being rejected/clarified.
- Fatal Rejects
- Order Activities of BellSouth or the CLEC associated with internal or administrative use of local services (Record Orders, Test Orders, etc.) where identifiable.

## Business Rules

**Fully Mechanized:** An LSR/Service Request is considered "rejected" when it is submitted electronically but does not pass edit checks in the ordering systems (EDI, LENS, TAG, LESOG, LNP Gateway, LAUTO) and is returned to the CLEC without manual intervention. There are two types of "Rejects" in the Mechanized category:

A **Fatal Reject** occurs when a CLEC attempts to electronically submit an LSR but required fields are either not populated or incorrectly populated and the request is returned to the CLEC before it is considered a valid LSR.

Fatal rejects are reported in a separate column, and for informational purposes ONLY. They are not considered in the calculation of the percent of total LSRs rejected or the total number of rejected LSRs.

An **Auto Clarification** occurs when a valid LSR is electronically submitted but rejected from LESOG or LAUTO because it does not pass further edit checks for order accuracy.

**Partially Mechanized:** A valid LSR, which is electronically submitted (via EDI, LENS, TAG) but cannot be processed electronically and "falls out" for manual handling. It is then put into "clarification" and sent back (rejected) to the CLEC.

**Non-Mechanized:** LSRs which are faxed or mailed to the LCSC for processing and "clarified" (rejected) back to the CLEC by the BellSouth service representative.

**Interconnection Trunks:** Interconnection Trunks are ordered on Access Service Requests (ASRs). ASRs are submitted to and processed by the Local Interconnection Service Center (LISC). Trunk data is reported as a separate category.

## Calculation

**Percent Rejected Service Requests** = (a ÷ b) X 100

- a = Total Number of Service Requests Rejected in the reporting period
- b = Total Number of Service Requests Received in the reporting period

## Report Structure

- Fully Mechanized, Partially Mechanized, Non-Mechanized
- Trunks
- CLEC Specific
- CLEC Aggregate
- Geographic Scope
  - State
  - Region
- Product Specific percent Rejected
- Total percent Rejected

## Data Retained

| Relating to CLEC Experience | Relating to BellSouth Performance |
|---|---|
| • Report Month<br>• Total Number of LSRs<br>• Total Number of Rejects<br>• State and Region<br>• Total Number of ASRs (Trunks) | • Not Applicable |

## SQM Disaggregation - Analog/Benchmark

| SQM Level of Disaggregation | SQM Analog/Benchmark |
|---|---|
| Mechanized, Partially Mechanized and Non-Mechanized<br>• Resale - Residence<br>• Resale - Business<br>• Resale – Design (Special)<br>• Resale PBX<br>• Resale Centrex<br>• Resale ISDN<br>• LNP Standalone<br>• INP Standalone<br>• 2W Analog Loop Design<br>• 2W Analog Loop Non-Design<br>• 2W Analog Loop with INP Design<br>• 2W Analog Loop with INP Non-Design<br>• 2W Analog Loop with LNP Design<br>• 2W Analog Loop with LNP Non-Design<br>• UNE Digital Loop < DS1<br>• UNE Digital Loop ≥ DS1<br>• UNE Loop + Port Combinations<br>• UNE Combination Other<br>• UNE ISDN Loop<br>• UNE Other Design<br>• UNE Other Non-Design<br>• UNE Line Splitting<br>• EELs<br>• Switch Ports<br>• UNE xDSL (ADSL, HDSL, UCL)<br>• Line Sharing<br>• Local Interoffice Transport<br>• Local Interconnection Trunks | • Diagnostic |

## SEEM Measure

| SEEM Measure | | |
|---|---|---|
| No | Tier I | |
| | Tier II | |

## SEEM Disaggregation - Analog/Benchmark

| SEEM Disaggregation | SEEM Analog/Benchmark |
|---|---|
| • Not Applicable | • Not Applicable |

# O-8: Reject Interval

## Definition

Reject Interval is the average reject time from receipt of Service Requests [(Local Service Requests (LSRs) or Access Service Requests (ASRs)] to the distribution of a Reject. Service Requests are considered valid when they are submitted by the CLEC and pass edit checks to insure the data received is correctly formatted and complete.

## Exclusions

- Service Requests canceled by CLEC prior to being rejected/clarified.
- Fatal Rejects
- Designated Holidays are excluded from the interval calculation.
- LSRs which are identified and classified as "Projects"
- The following hours for Partially mechanized and Non-mechanized LSRs are excluded from the interval calculation:

  Residence Resale Group – Monday through Saturday 7:00PM until 7:00AM
  From 7:00 PM Saturday until 7:00 AM Monday

  Business Resale, Complex, UNE Groups – Monday through Friday 6:00PM until 8:00AM
  From 6:00 PM Friday until 8:00 AM Monday.

  Local Interconnection Service Center (LISC) - Monday through Friday 4:30 P.M. until 8:00 A M.
  From 4:30 P.M.Friday until 8:00 A.M. Monday

  The hours excluded will be altered to reflect changes in the Center operating hours. The LCSC will accept faxed LSRs only during posted hours of operation.

  The interval will be the amount of time accrued from receipt of the LSR until normal closing of the center if an LSR is worked using overtime hours.

  In the case of a Partially Mechanized LSR received and worked after normal business hours, the interval will be set at one (1) minute.

## Business Rules

The Reject interval is determined for each rejected LSR processed during the reporting period. The Reject interval is the elapsed time from when BellSouth receives LSR (date and time stamps in EDI or TAG) until that LSR is rejected back to the CLEC. Elapsed time for each LSR (date and time stamps in EDI or TAG) is accumulated for each reporting dimension. The accumulated time for each reporting dimension is then divided by the associated total number of rejected LSRs to produce the reject interval distribution.

**Fully Mechanized:** The elapsed time from receipt of a valid electronically submitted LSR (date and time stamp in EDI translator or TAG) until the LSR is rejected (date and time stamp or reject in EDI translator, or TAG). Auto Clarifications are considered in the Fully Mechanized category.

**Partially Mechanized:** The elapsed time from receipt of a valid electronically submitted LSR (date and time stamp in EDI translator or TAG) until it falls out for manual handling. The stop time on partially mechanized LSRs is when the LCSC Service Representative clarifies the LSR back to the CLEC via EDI translator, or TAG.

**Non-Mechanized:** The elapsed time from receipt of a valid LSR (date and time stamp of FAX or date and time mailed LSR is received in the LCSC) until notice of the reject (clarification) is returned to the CLEC via LON.

**Interconnection Trunks:** Interconnection Trunks are ordered on Access Service Requests (ASRs). ASRs are submitted to and processed by the Local Interconnection Service Center (LISC). Trunk data is reported as a separate category.

## Calculation

**Reject Interval** = (a - b)

- a = Date and Time of Service Request Rejection
- b = Date and Time of Service Request Receipt

**Average Reject Interval** = (c ÷ d)

- c = Sum of all Reject Intervals
- d = Number of Service Requests Rejected in Reporting Period

**Reject Interval Distribution** = (e ÷ f) X 100

- e = Service Requests Rejected in reported interval
- f = Total Number of Service Requests Rejected in Reporting Period

## Report Structure

- Fully Mechanized, Partially Mechanized, Non-Mechanized
- CLEC Specific
- CLEC Aggregate
- Geographic Scope
  - State
  - Region
- Fully Mechanized:
  0 - ≤ 4 minutes
  > 4 - ≤ 8 minutes
  >8 - ≤ 12 minutes
  > 12 - ≤ 60 minutes
  0 - ≤ 1 hour
  > 1 - ≤ 4 hours
  > 4 - ≤ 8 hours
  > 8 - ≤ 12 hours
  > 12 - ≤ 16 hours
  > 16 - ≤ 20 hours
  > 20 - ≤ 24 hours
  > 24 hours
- Partially Mechanized:
  0 - ≤ 1 hour
  > 1 - ≤ 4 hours
  > 4 - ≤ 8 hours
  > 8 - ≤ 10 hours
  0 - ≤ 10 hours
  > 10 - ≤ 18 hours
  0 - ≤ 18 hours
  > 18 - ≤ 24 hours
  > 24 hours
- Non-mechanized:
  0 - ≤ 1 hour
  > 1 - ≤ 4 hours
  > 4 - ≤ 8 hours
  > 8 - ≤ 12 hours
  > 12 - ≤ 16 hours
  > 16 - ≤ 20 hours
  > 20 - ≤ 24 hours
  0 - ≤ 24 hours
  > 24 hours
- Trunks:
  0 - ≤ 36 hours
  > 36 hours
- Average Interval is reported in business hours.

## Data Retained

| Relating to CLEC Experience | Relating to BellSouth Performance |
|---|---|
| Report Month<br>• Reject Interval<br>• Total Number of LSRs<br>• Total Number of Rejects<br>• State and Region<br>• Total Number of ASRs (Trunks) | • Not Applicable |

## SQM Disaggregation - Analog/Benchmark

| SQM Level of Disaggregation | SQM Analog/Benchmark |
|---|---|
| • Resale – Residence<br>• Resale – Business<br>• Resale – Design (Special)<br>• Resale PBX<br>• Resale Centrex<br>• Resale ISDN<br>• LNP Standalone<br>• INP Standalone<br>• 2W Analog Loop Design<br>• 2W Analog Loop Non-Design<br>• 2W Analog Loop with INP Design<br>• 2W Analog Loop with INP Non-Design<br>• 2W Analog Loop with LNP Design<br>• 2W Analog Loop with LNP Non-Design<br>• UNE Digital Loop < DS1<br>• UNE Digital Loop ≥ DS1<br>• UNE Loop + Port Combinations<br>• UNE Combination Other<br>• UNE ISDN Loop<br>• UNE Other Design<br>• UNE Other Non-Design<br>• UNE Line Splitting<br>• EELs<br>• Switch Ports<br>• UNE xDSL (ADSL, HDSL, UCL)<br>• Line Sharing<br>• Local Interoffice Transport | • Fully Mechanized:<br>- 97% ≤ 1Hour<br>• Partially Mechanized:<br>- 95% ≤ 10 Hours<br>• Non-Mechanized: - 95% ≤ 24 Hours |
| • Local Interconnection Trunks | • Trunks: 95% ≤ 36 Hours |

## SEEM Measure

| SEEM Measure | | |
|---|---|---|
| Yes | Tier I | X |
| | Tier II | X |

## SEEM Disaggregation - Analog/Benchmark

| SEEM Disaggregation | SEEM Analog/Benchmark |
|---|---|
| • Fully Mechanized | • 97% ≤ 1 hour |

| SEEM Disaggregation | SEEM Analog/Benchmark |
|---|---|
| • Partially Mechanized | • 95% ≤ 10 hours |
| • Non-Mechanized | • 95% ≤ 24 hours |
| • Local Interconnection Trunks | • 95% ≤ 36 hours |

# O-9: Firm Order Confirmation Timeliness

## Definition

Interval for Return of a Firm Order Confirmation (FOC Interval) is the average response time from receipt of valid LSR to distribution of a Firm Order Confirmation. The interval will include an electronic facilities check.

## Exclusions

- Service Requests canceled by CLEC prior to being confirmed.
- Designated Holidays are excluded from the interval calculation.
- LSRs which are identified and classified as "Projects"
- The following hours for Partially mechanized and Non-mechanized LSRs are excluded from the interval calculation:

  Residence Resale Group – Monday through Saturday 7:00PM until 7:00AM
  From 7:00 PM Saturday until 7:00 AM Monday

  Business Resale, Complex, UNE Groups – Monday through Friday 6:00PM until 8:00AM
  From 6:00 PM Friday until 8:00 AM Monday.

  Local Interconnection Service Center (LISC) - From 4:30 P.M. Friday until 8:00 A.M. Monday (ASRs received after 2:00PM will be counted as if received at 8:00AM the next business day.)

  The hours excluded will be altered to reflect changes in the Center operating hours. The LCSC will accept faxed LSRs only during posted hours of operation.

  The interval will be the amount of time accrued from receipt of the LSR until normal closing of the center if an LSR is worked using overtime hours.

  In the case of a Partially Mechanized LSR received and worked after normal business hours, the interval will be set at one (1) minute.

## Business Rules

- **Fully Mechanized:** The elapsed time from receipt of a valid electronically submitted LSR (date and time stamp in EDI or TAG) until the LSR is processed, appropriate service orders are generated and a Firm Order Confirmation is returned to the CLEC via EDI translator or TAG.
- **Partially Mechanized:** The elapsed time from receipt of a valid electronically submitted LSR (date and time stamp in EDI, or TAG) which falls out for manual handling until appropriate service orders are issued by a BellSouth service representative via Direct Order Entry (DOE) or Service Order Negotiation Generation System (SONGS) to SOCS and a Firm Order Confirmation is returned to the CLEC via EDI translator, or TAG.
- **Non-Mechanized:** The elapsed time from receipt of a valid paper LSR (date and time stamp of FAX or date and time paper LSRs received in LCSC) until appropriate service orders are issued by a BellSouth service representative via Direct Order Entry (DOE) or Service Order Negotiation Generation System (SONGS) to SOCS and a Firm Order Confirmation is sent to the CLEC via LON.
- **Interconnection Trunks:** Interconnection Trunks are ordered on Access Service Requests (ASRs). ASRs are submitted to and processed by the Local Interconnection Service Center (LISC). The elapsed time is measured from receipt of a valid ASR (date and time stamp of a FAX or paper ASR received in the LISC) until the appropriate orders are issued by a BellSouth representative and a FOC issued in EXACT. Trunk data is reported as a separate category.

## Calculation

**Firm Order Confirmation Interval** = (a - b)

- a = Date and Time of Firm Order Confirmation
- b = Date and Time of Service Request Receipt

**Average FOC Interval** = (c ÷ d)

- c = Sum of all Firm Order Confirmation Times
- d = Number of Service Requests Confirmed in Reporting Period

**FOC Interval Distribution** = (e ÷ f) X 100

- e = Service Requests Confirmed in Designated Interval
- f = Total Service Requests Confirmed in the Reporting Period

## Report Structure

- Fully Mechanized, Partially Mechanized, Non-Mechanized
  - CLEC Specific
  - CLEC Aggregate
- Geographic Scope
  - State
  - Region
- Fully Mechanized:
  0 - ≤ 15 minutes
  > 15 - ≤ 30 minutes
  > 30 - ≤ 45 minutes
  > 45 - ≤ 60 minutes
  > 60 - ≤ 90 minutes
  > 90 - ≤ 120 minutes
  > 120 - ≤ 180 minutes
  0 - ≤ 3 hours
  > 3 - ≤ 6 hours
  > 6 - ≤ 12 hours
  > 12 - ≤ 24 hours
  > 24 - ≤ 48 hours
  > 48 hours
- Partially Mechanized:
  0 - ≤ 4 hours
  > 4 - ≤ 8 hours
  > 8 - ≤ 10 hours
  0 - ≤ 10 hours
  > 10 - ≤ 18 hours
  0 - ≤ 18 hours
  > 18 - ≤ 24 hours
  > 24 - ≤ 48 hours
  > 48 hours
- Non-mechanized:
  0 - ≤ 4 hours
  > 4 - ≤ 8 hours
  > 8 - ≤ 12 hours
  > 12 - ≤ 16 hours
  0 - ≤ 24 hours
  > 16 - ≤ 20 hours
  > 20 - ≤ 24 hours
  > 24 - ≤ 36 hours
  0 - ≤ 36 hours
  > 36 - ≤ 48 hours
  > 48 hours
- Trunks:
  0 - ≤ 48 hours
  > 48 hours
- Average Interval is reported in business hours

## Data Retained

| Relating to CLEC Experience | Relating to BellSouth Performance |
|---|---|
| • Report month<br>• Interval for FOC<br>• Total number of LSRs<br>• State and Region<br>• Total Number of ASRs (Trunks) | • Not Applicable |

## SQM Disaggregation - Analog/Benchmark

| SQM Level of Disaggregation | SQM Analog/Benchmark |
|---|---|
| • Resale – Residence<br>• Resale – Business<br>• Resale – Design (Special)<br>• Resale PBX<br>• Resale Centrex<br>• Resale ISDN<br>• LNP Standalone<br>• INP Standalone<br>• 2W Analog Loop Design<br>• 2W Analog Loop Non-Design<br>• 2W Analog Loop with INP Design<br>• 2W Analog Loop with INP Non-Design<br>• 2W Analog Loop with LNP Design<br>• 2W Analog Loop with LNP Non-Design<br>• UNE Digital Loop < DS1<br>• UNE Digital Loop ≥ DS1<br>• UNE Loop + Port Combinations<br>• UNE Combination Other<br>• UNE ISDN Loop<br>• UNE Other Design<br>• UNE Other Non-Design<br>• UNE Line Splitting<br>• EELs<br>• Switch Ports<br>• UNE xDSL (ADSL, HDSL, UCL)<br>• Line Sharing<br>• Local Interoffice Transport | • Fully Mechanized: - 95% ≤3 Hours<br>• Partially Mechanized:<br>- 95% ≤ 10 Hours<br>• Non-Mechanized: - 95% ≤ 24 Hours |
| • Local Interconnection Trunks | • Trunks: 95% ≤ 48 Hours |

## SEEM Measure

| SEEM Measure | | |
|---|---|---|
| Yes | Tier I | X |
| | Tier II | X |

## SEEM Disaggregation - Analog/Benchmark

| SEEM Disaggregation | SEEM Analog/Benchmark |
|---|---|
| • Fully Mechanized | • 95% ≤ 3 Hours |
| • Partially Mechanized | • 95% ≤ 10 Hours |
| • Non-Mechanized | • 95% ≤ 24 Hours |
| • Local Interconnection Trunks | • 95% ≤ 48 Hours |

# O-10: Service Inquiry with LSR Firm Order Confirmation (FOC) Response Time Manual[1]



## Definition

This report measures the interval and the percent within the interval from the submission of a Service Inquiry (SI) with Firm Order LSR to the distribution of a Firm Order Confirmation (FOC).

## Exclusions

- Designated Holidays are excluded from the interval calculation.
- Weekend hours from 5:00PM Friday until 8:00AM Monday are excluded from the interval calculation of the Service Inquiry.
- Canceled Requests
- Electronically Submitted Requests

## Business Rules

This measurement combines four intervals:

1. From receipt of a valid Service Inquiry with LSR to hand off to the Service Advocacy Center (SAC) for Loop 'Look-up'.
2. From SAC start date to SAC complete date.
3. From SAC complete date to the Complex Resale Support Group (CRSG) complete date with hand off to LCSC.
4. From receipt of a valid SI/LSR in the LCSC to Firm Order Confirmation.

(A valid Service Inquiry is an inquiry that has all required fields populated correctly and has not been returned for clarification.)

## Calculation

**FOC Timeliness Interval** = (a - b)

- a = Date and Time Firm Order Confirmation (FOC) for SI with LSR returned to CLEC
- b = Date and Time SI with LSR received

**Average Interval** = (c ÷ d)

- c = Sum of all FOC Timeliness Intervals
- d = Total number of SIs with LSRs received in the reporting period

**Percent Within Interval** = (e ÷ f) X 100

- e = Total number of Service Inquiries with LSRs received by the CRSG to distribution of FOC by the Local Carrier Service Center (LCSC)
- f = Total number of Service Inquiries with LSRs received in the reporting period

## Report Structure

- CLEC Aggregate
- CLEC Specific
- Geographic Scope
  - State
  - Region
- Intervals
  0 – ≤ 3 days
  > 3 – ≤ 5 days
  0 – ≤ 5 days
  > 5 – ≤ 7 days
  > 7 – ≤ 10 days
  > 10 – ≤ 15 days
  >15 days
- Average Interval measured in days

*1. See O-9 for FOC Timeliness*

## Data Retained

| Relating to CLEC Experience | Relating to BellSouth Performance |
|---|---|
| • Report Month<br>• Total Number of Requests<br>• SI Intervals<br>• State and Region | • Not Applicable |

## SQM Disaggregation - Analog/Benchmark

| SQM Level of Disaggregation | SQM Analog/Benchmark |
|---|---|
| • xDSL (includes UNE unbundled ADSL, HDSL and UNE Unbundled Copper Loops)<br>• Unbundled Interoffice Transport | • 95% Returned ≤ 5 Business Days |

## SEEM Measure

| SEEM Measure | | |
|---|---|---|
| No | Tier I | |
| | Tier II | |

## SEEM Disaggregation - Analog/Benchmark

| SEEM Disaggregation | SEEM Analog/Benchmark |
|---|---|
| • Not Applicable | • Not Applicable |

# O-11: Firm Order Confirmation and Reject Response Completeness

## Definition

A response is expected from BellSouth for every Local Service Request transaction (version). Firm Order Confirmation and Reject Response Completeness is the corresponding number of Local Service Requests received to the combination of Firm Order Confirmation and Reject Responses.

## Exclusions

- Service Requests canceled by the CLEC prior to FOC or Rejected/Clarified.

## Business Rules

**Mechanized** – The number of FOCs or Auto Clarifications sent to the CLEC from EDI, or TAG in response to electronically submitted LSRs.

**Partially Mechanized** – The number of FOCs or Rejects sent to the CLEC from EDI, or TAG in response to electronically submitted LSRs which fall out for manual handling by the LCSC personnel.

**Non-Mechanized:** The number of FOCs or Rejects sent to the CLECs by FAX server.

**Interconnection Trunks:** Interconnection Trunks are ordered on Access Service Requests (ASRs). ASRs are submitted to and processed by the Local Interconnection Service Center (LISC). Trunk data is reported as a separate category.

**For CLEC Results**:

Percent responses is determined by computing the number of Firm Order Confirmations and Rejects transmitted by BellSouth and dividing by the number of Local Service Requests (all versions) received in the reporting period.

## Calculation

**Firm Order Confirmation / Reject Response Completeness** = (a ÷ b) X 100

- a = Total Number of Service Requests for which a Firm Order Confirmation or Reject is Sent
- b = Total Number of Service Requests Received in the Report Period

## Report Structure

Fully Mechanized, Partially Mechanized, Non-Mechanized and Interconnection Trunks

- State and Region
- CLEC Specific
- CLEC Aggregate

## Data Retained

| Relating to CLEC Experience | Relating to BellSouth Performance |
|---|---|
| Report month<br>• Total number of LSRs<br>• Total number of rejects<br>• Total number of ASRs (Trunks)<br>• Total number of FOCs | • Not Applicable |

## SQM Disaggregation - Analog/Benchmark

| SQM Level of Disaggregation | SQM Analog/Benchmark |
|---|---|
| • Resale Residence<br>• Resale Business<br>• Resale Design (Special)<br>• Resale PBX<br>• Resale Centrex<br>• Resale ISDN<br>• LNP Standalone<br>• INP Standalone<br>• 2W Analog Loop Design<br>• 2W Analog Loop Non-Design<br>• 2W Analog Loop with INP Design<br>• 2W Analog Loop with INP Non-Design<br>• 2W Analog Loop with LNP Design<br>• 2W Analog Loop with LNP Non-Design<br>• UNE Digital Loop < DS1<br>• UNE Digital Loop ≥ DS1<br>• UNE Loop + Port Combinations<br>• UNE Combination Other<br>• UNE ISDN Loop<br>• UNE Other Design<br>• UNE Other Non-Design<br>• UNE Line Splitting<br>• EELs<br>• Switch Ports<br>• UNE xDSL (ADSL, HDSL, UCL)<br>• Line Sharing<br>• Local Interoffice Transport<br>• Local Interconnection Trunks | • 95% Returned |

## SEEM Measure

| SEEM Measure | | |
|---|---|---|
| Yes | Tier I | X |
| | Tier II | X |

## SEEM Disaggregation - Analog/Benchmark

| SEEM Disaggregation | SEEM Analog/Benchmark |
|---|---|
| • Fully Mechanized<br>• Partially Mechanized<br>• Non-Mechanized<br>• Local Interconnection Trunks | • 95% Returned |

# O-12: Speed of Answer in Ordering Center

## Definition

Measures the average time a customer is in queue.

## Exclusions

None

## Business Rules

The clock starts when the appropriate option is selected (i.e., 1 for Resale Consumer, 2 for Resale Multiline, and 3 for UNE-LNP, etc.) and the call enters the queue for that particular group in the LCSC. The clock stops when a BellSouth service representative in the LCSC answers the call. The speed of answer is determined by measuring and accumulating the elapsed time from the entry of a CLEC call into the BellSouth automatic call distributor (ACD) until a service representative in BellSouth's Local Carrier Service Center (LCSC) answers the CLEC call.

## Calculation

**Speed of Answer in Ordering Center** = (a ÷ b)

- a = Total seconds in queue
- b = Total number of calls answered in the Reporting Period

## Report Structure

Aggregate

- CLEC – Local Carrier Service Center
- BellSouth
  - Business Service Center
  - Residence Service Center

**Note**: Combination of Residence Service Center and Business Service Center data under development

## Data Retained

| Relating to CLEC Experience | Relating to BellSouth Performance |
|---|---|
| • Mechanized Tracking Through LCSC Automatic Call Distributor | • Mechanized Tracking Through BellSouth Retail Center Support System |

## SQM Disaggregation - Analog/Benchmark

| SQM Level of Disaggregation | SQM Analog/Benchmark |
|---|---|
| Aggregate<br>• CLEC – Local Carrier Service Center<br>• BellSouth<br>- Business Service Center<br>- Residence Service Center | • Parity with Retail |

## SEEM Measure

| SEEM Measure | | |
|---|---|---|
| Yes | Tier I | |
| | Tier II | X |

## SEEM Disaggregation - Analog/Benchmark

| SEEM Disaggregation | SEEM Analog/Benchmark |
|---|---|
| • CLEC Local Carrier Service Center<br>• BellSouth<br>- Business Service Center<br>- Residence Service Center | • Parity With Retail |

# Section 3: Provisioning

## P-1: Mean Held Order Interval & Distribution Intervals

### Definition

When delays occur in completing CLEC orders, the average period that CLEC orders are held for BellSouth reasons, pending a delayed completion, should be no worse for the CLEC when compared to BellSouth delayed orders. Calculation of the interval is the total days orders are held and pending but not completed that have passed the currently committed due date; divided by the total number of held orders. This report is based on orders still pending, held and past their committed due date. The distribution interval is based on the number of orders held and pending but not completed over 15 and 90 days. (Orders reported in the >90 day interval are also included in the >15 day interval.)

### Exclusions

- Order Activities of BellSouth or the CLEC associated with internal or administrative use of local services (Record Orders, Listing Orders, Test Orders, etc.) Test order types may be C, N, R, or T.
- Disconnect (D) & From (F) orders
- Orders with appointment code of 'A' for Rural orders.

### Business Rules

**Mean Held Order Interval:** This metric is computed at the close of each report period. The held order interval is established by first identifying all orders, at the close of the reporting interval, that both have not been reported as completed in SOCS and have passed the currently committed due date for the order and identifying all orders that have been reported as completed in SOCS after the currently committed due date for the order. For each such order, the number of calendar days between the earliest committed due date on which BellSouth had a company missed appointment and the close of the reporting period is established and represents the held order interval for that particular order. The held order interval is accumulated by the standard groupings, unless otherwise noted, and the reason for the order being held. The total number of days accumulated in a category is then divided by the number of held orders within the same category to produce the mean held order interval. The interval is by calendar days with no exclusions for Holidays or Sundays.

CLEC Specific reporting is by type of held order (facilities, equipment, other), total number of orders held, and the total and average days.

**Held Order Distribution Interval:** This measure provides data to report total days held and identifies these in categories of >15 days and > 90 days. (Orders counted in >90 days are also included in > 15 days).

### Calculation

Mean Held Order Interval = a ÷ b

- a = Sum of held-over-days for all Past Due Orders Held for the reporting period
- b = Number of Past Due Orders Held and Pending But Not Completed and past the committed due date

Held Order Distribution Interval (for each interval) = (c ÷ d) X 100

- c = # of Orders Held for ≥ 15 days or # of Orders Held for ≥ 90 days
- d = Total # of Past Due Orders Held and Pending But Not Completed)

### Report Structure

- CLEC Specific
- CLEC Aggregate
- BellSouth Aggregate
- Circuit Breakout < 10, ≥ 10 (except trunks)
- Dispatch/Non-Dispatch

## Data Retained

| Relating to CLEC Experience | Relating to BellSouth Performance |
|---|---|
| • Report Month<br>• CLEC Order Number and PON (PON)<br>• Order Submission Date (TICKET_ID)<br>• Committed Due Date (DD)<br>• Service Type (CLASS_SVC_DESC)<br>• Hold Reason<br>• Total line/circuit count<br>• Geographic Scope<br>**Note**: Code in parentheses is the corresponding header found in the raw data file. | • Report Month<br>• BellSouth Order Number<br>• Order Submission Date<br>• Committed Due Date<br>• Service Type<br>• Hold Reason<br>• Total line/circuit count<br>• Geographic Scope |

## SQM Disaggregation - Analog/Benchmark

| SQM LEVEL of Disaggregation | SQM Analog/Benchmark |
|---|---|
| • Resale Residence | • Retail Residence |
| • Resale Business | • Retail Business |
| • Resale Design | • Retail Design |
| • Resale PBX | • Retail PBX |
| • Resale Centrex | • Retail Centrex |
| • Resale ISDN | • Retail ISDN |
| • LNP (Standalone) | • Retail Residence and Business (POTS) |
| • INP (Standalone) | • Retail Residence and Business (POTS) |
| • 2W Analog Loop Design | • Retail Residence and Business Dispatch |
| • 2W Analog Loop Non-Design | • Retail Residence and Business - POTS Excluding Switch-Based Orders |
| • 2W Analog Loop With LNP - Design | • Retail Residence and Business Dispatch |
| • 2W Analog Loop With LNP- Non-Design | • Retail Residence and Business - POTS Excluding Switch |
| • 2W Analog Loop With INP-Design | • Retail Residence and Business Dispatch |
| • 2W Analog Loop With INP-Non-Design | • Retail Residence and Business - POTS Excluding Switch-Based Orders |
| • UNE Digital Loop < DS1 | • Retail Digital Loop < DS1 |
| • UNE Digital Loop ≥ DS1 | • Retail Digital Loop ≥ DS1 |
| • UNE Loop + Port Combinations<br>- Dispatch In<br>- Switch Based | • Retail Residence and Business<br>- Dispatch In<br>- Switch Based |
| • UNE Switch Ports | • Retail Residence and Business (POTS) |
| • UNE Combo Other | • Retail Residence, Business and Design Dispatch |
| • UNE xDSL (HDSL, ADSL and UCL) | • ADSL Provided to Retail |
| • UNE ISDN (Includes UDC) | • Retail ISDN - BRI |
| • UNE Line Sharing | • ADSL Provided to Retail |
| • UNE Other Design | • Retail Design |
| • UNE Other Non-Design | • Retail Residence and Business |
| • Local Transport (Unbundled Interoffice Transport) | • Retail DS1/DS3 Interoffice |

| SQM LEVEL of Disaggregation | SQM Analog/Benchmark |
|---|---|
| • Local Interconnection Trunks | • Parity with Retail |
| • UNE Line Splitting | • ADSL to Retail |
| • EELs | • Retail DS1/DS3 |

## SEEM Measure

| SEEM Measure | | |
|---|---|---|
| No | Tier I | |
| | Tier II | |

## SEEM Disaggregation - Analog/Benchmark

| SEEM Disaggregation | SEEM Analog/Benchmark |
|---|---|
| • Not Applicable | • Not Applicable |

# P-2: Average Jeopardy Notice Interval & Percentage of Orders Given Jeopardy Notices

## Definition

When BellSouth can determine in advance that a committed due date is in jeopardy for facility delay, it will provide advance notice to the CLEC.

The interval is from the date/time the notice is released to the CLEC/BellSouth systems until 5pm on the commitment date of the order. The Percent of Orders is the percentage of orders given jeopardy notices for facility delay in the count of orders confirmed in the report period.

## Exclusions

- Orders held for CLEC end user reasons
- Disconnect (D) & From (F) orders

## Business Rules

When BellSouth can determine in advance that a committed due date is in jeopardy for facility delay, it will provide advance notice to the CLEC. The number of committed orders in a report period is the number of orders that have a due date in the reporting period. Jeopardy notices for interconnection trunks results are usually zero as these trunks seldom experience facility delays. The Committed due date is considered the Confirmed due date.

## Calculation

Jeopardy Interval = a - b

- a = Date and Time of Jeopardy Notice
- b = Date and Time of Scheduled Due Date on Service Order

Average Jeopardy Interval = c ÷ d

- c = Sum of all jeopardy intervals
- d = Number of Orders Notified of Jeopardy in Reporting Period

Percent of Orders Given Jeopardy Notice = (e ÷ f) X 100

- e = Number of Orders Given Jeopardy Notices in Reporting Period
- f = Number of Orders Confirmed (due) in Reporting Period)

## Report Structure

- CLEC Specific
- CLEC Aggregate
- BellSouth Aggregate
- Mechanized Orders
- Non-Mechanized Orders
- Dispatch/Non-Dispatch

## Data Retained

| Relating to CLEC Experience | Relating to BellSouth Performance |
|---|---|
| • Report Month<br>• CLEC Order Number and PON<br>• Date and Time Jeopardy Notice sent<br>• Committed Due Date<br>• Service Type<br>**Note:** Code in parentheses is the corresponding header found in the raw data file. | • Report Month<br>• BellSouth Order Number<br>• Date and Time Jeopardy Notice sent<br>• Committed Due Date<br>• Service Type |

## SQM Disaggregation - Analog/Benchmark

| SQM LEVEL of Disaggregation | SQM Analog/Benchmark |
|---|---|
| • Resale Residence | • Retail Residence |
| • Resale Business | • Retail Business |
| • Resale Design | • Retail Design |
| • Resale PBX | • Retail PBX |
| • Resale Centrex | • Retail Centrex |
| • Resale ISDN | • Retail ISDN |
| • LNP (Standalone) | • Retail Residence and Business (POTS) |
| • INP (Standalone) | • Retail Residence and Business (POTS) |
| • 2W Analog Loop Design | • Retail Residence and Business Dispatch |
| • 2W Analog Loop Non-Design | • Retail Residence and Business - POTS Excluding Switch-Based Orders |
| • 2W Analog Loop With LNP - Design | • Retail Residence and Business Dispatch |
| • 2W Analog Loop With LNP- Non-Design | • Retail Residence and Business - POTS Excluding Switch-Based Orders |
| • 2W Analog Loop With INP-Design | • Retail Residence and Business Dispatch |
| • 2W Analog Loop With INP-Non-Design | • Retail Residence and Business - POTS Excluding Switch-Based Orders |
| • UNE Digital Loop < DS1 | • Retail Digital Loop < DS1 |
| • UNE Digital Loop ≥ DS1 | • Retail Digital Loop ≥ DS1 |
| • UNE Loop + Port Combinations<br>- Dispatch In<br>- Switch Based | • Retail Residence and Business<br>- Dispatch In<br>- Switch Based |
| • UNE Switch Ports | • Retail Residence and Business (POTS) |
| • UNE Combo Other | • Retail Residence, Business and Design Dispatch |
| • UNE xDSL (HDSL, ADSL and UCL) | • ADSL Provided to Retail |
| • UNE ISDN (Includes UDC) | • Retail ISDN - BRI |
| • UNE Line Sharing | • ADSL Provided to Retail |
| • UNE Other Design | • Retail Design |
| • UNE Other Non-Design | • Retail Residence and Business |
| • Local Transport (Unbundled Interoffice Transport) | • Retail DS1/DS3 Interoffice |
| • Local Interconnection Trunks | • Parity with Retail |
| • UNE Line Splitting | • ADSL to Retail |
| • EELs | • Retail DS1/DS3 |
| • Average Jeopardy Notice Interval (Electronic only) | • 95% >= 48 Hours |

## SEEM Measure

| SEEM Measure | | |
|---|---|---|
| No | Tier I | |
| | Tier II | |

## SEEM Disaggregation - Analog/Benchmark

| SEEM Disaggregation | SEEM Analog/Benchmark |
|---|---|
| • Not Applicable | • Not Applicable |

# P-3: Percent Missed Initial Installation Appointments

## (This metric was not ordered by FPSC)

### Definition

"Percent missed initial installation appointments" monitors the reliability of BellSouth commitments with respect to committed due dates to assure that the CLEC can reliably quote expected due dates to their retail customer as compared to BellSouth. This measure is the percentage of total orders processed for which BellSouth is unable to complete the service orders on the committed due dates and reported for Total misses and End User Misses.

### Exclusions

- Canceled Service Orders
- Order Activities of BellSouth or the CLEC associated with internal or administrative use of local services (Record Orders, Listing Orders Test Orders, etc.)
- Disconnect (D) & From (F) orders
- End User Misses

### Business Rules

Percent Missed Initial Installation Appointments (PMI) is the percentage of orders with completion dates in the reporting period that are past the original committed due date. Missed Appointments caused by end-user reasons will be excluded and reported separately. The first commitment date on the service order that is a missed appointment is the missed appointment code used for calculation whether it is a BellSouth missed appointment or an End User missed appointment. The "due date" is any time on the confirmed due date. Which means there cannot be a cutoff time for commitments, as certain types of orders are requested to be worked after standard business hours. Also, during Daylight Savings Time, field technicians are scheduled until 9PM in some areas and the customer is offered a greater range of intervals from which to select.

### Calculation

**Percent Missed Installation Appointments** = (a ÷ b) X 100

- a = Number of Orders with Completion date in Reporting Period past the Original Committed Due Date
- b = Number of Orders Completed in Reporting Period

### Report Structure

- CLEC Specific
- CLEC Aggregate
- BellSouth Aggregate
- Report in Categories of <10 lines/circuits ≥ 10 lines/circuits (except trunks)
- Dispatch/Non-Dispatch

### Data Retained

| Relating to CLEC Experience | Relating to BellSouth Performance |
|---|---|
| • Report month<br>• CLEC Order Number and PON (PON)<br>• Committed Due Date (DD)<br>• Completion Date (CMPLTN DD)<br>• Status Type<br>• Status Notice Date<br>• Standard Order Activity<br>• Geographic Scope<br>**Note:** Code in parentheses is the corresponding header found in the raw data file. | • Report month<br>• BellSouth Order Number<br>• Committed Due Date (DD)<br>• Completion Date (CMPLTN DD)<br>• Status Type<br>• Status Notice Date<br>• Standard Order Activity<br>• Geographic Scope |

## SQM Disaggregation - Analog/Benchmark

| SQM LEVEL of Disaggregation | SQM Analog/Benchmark |
|---|---|
| • Resale Residence | • Retail Residence |
| • Resale Business | • Retail Business |
| • Resale Design | • Retail Design |
| • Resale PBX | • Retail PBX |
| • Resale Centrex | • Retail Centrex |
| • Resale ISDN | • Retail ISDN |
| • LNP (Standalone) | • Retail Residence and Business (POTS) |
| • INP (Standalone) | • Retail Residence and Business (POTS) |
| • 2W Analog Loop Design | • Retail Residence and Business Dispatch |
| • 2W Analog Loop Non-Design | • Retail Residence and Business - POTS Excluding Switch-Based Orders |
| • 2W Analog Loop With LNP - Design | • Retail Residence and Business Dispatch |
| • 2W Analog Loop With LNP- Non-Design | • Retail Residence and Business - POTS Excluding Switch-Based Orders |
| • 2W Analog Loop With INP-Design | • Retail Residence and Business Dispatch |
| • 2W Analog Loop With INP-Non-Design | • Retail Residence and Business - POTS Excluding Switch-Based Orders |
| • UNE Digital Loop < DS1 | • Retail Digital Loop < DS1 |
| • UNE Digital Loop ≥ DS1 | • Retail Digital Loop ≥ DS1 |
| • UNE Loop + Port Combinations<br>- Dispatch In<br>- Switch Based | • Retail Residence and Business<br>- Dispatch In<br>- Switch Based |
| • UNE Switch Ports | • Retail Residence and Business (POTS) |
| • UNE Combo Other | • Retail Residence, Business and Design Dispatch |
| • UNE xDSL (HDSL, ADSL and UCL)<br>- Without Conditioning<br>- With Conditioning | • ADSL Provided to Retail<br>- Without Conditioning<br>- With Conditioning (BellSouth does not offer this service to Retail) |
| • UNE ISDN (Includes UDC) | • Retail ISDN - BRI |
| • UNE Line Sharing | • ADSL Provided to Retail |
| • UNE Other Design | • Retail Design |
| • UNE Other Non-Design | • Retail Residence and Business |
| • Local Transport (Unbundled Interoffice Transport) | • Retail DS1/DS3 Interoffice |
| • Local Interconnection Trunks | • Parity with Retail |
| • UNE Line Splitting | • ADSL to Retail |
| • EELs | • Retail DS1/DS3 |

## SEEM Measure

| SEEM Measure | | |
|---|---|---|
| No | Tier I | |
| | Tier II | |

## SEEM Disaggregation - Analog/Benchmark

| SEEM Disaggregation | SEEM Analog/Benchmark |
|---|---|
| • Not Applicable | • Not Applicable |

# P-3A: Percent Missed Installation Appointments Including Subsequent Appointments

## Definition

"Percent missed installation appointments" monitors the reliability of BellSouth commitments with respect to committed due dates to assure that the CLEC can reliably quote expected due dates to their retail customer as compared to BellSouth. This measure is the percentage of total orders processed for which BellSouth is unable to complete the service orders on the committed due dates and reported for Total misses and End User Misses.

## Exclusions

- Canceled Service Orders
- Order Activities of BellSouth or the CLEC associated with internal or administrative use of local services (Record Orders, Listing Orders Test Orders, etc.) Test order types may be C, N, R, or T.
- Disconnect (D) & From (F) orders
- End User Misses

## Business Rules

Percent Missed Installation Appointments (PMI) is the percentage of orders with completion dates in the reporting period that are past the original committed due date. Missed Appointments caused by end-user reasons will be excluded and reported separately. The "due date" is the commitment time (if applicable) on the confirmed due date.

## Calculation

**Percent Missed Installation Appointments** = (a ÷ b) X 100

- a = Number of Appointments in Reporting Period past the Original (Date/Time as applicable) Committed and Subsequent Committed Due Date
- b = Number of Appointments on Orders Completed in Reporting Period

## Report Structure

- CLEC Specific
- CLEC Aggregate
- BellSouth Aggregate
- Report in Categories of <10 lines/circuits ≥ 10 lines/circuits (except trunks)
- Dispatch/Non-Dispatch

## Data Retained

| Relating to CLEC Experience | Relating to BellSouth Performance |
|---|---|
| • Report Month<br>• CLEC Order Number and PON (PON)<br>• Committed Due Date (DD)<br>• Completion Date (CMPLTN DD)<br>• Status Type<br>• Status Notice Date<br>• Standard Order Activity<br>• Geographic Scope<br>**Note:** Code in parentheses is the corresponding header found in the raw data file. | • Report Month<br>• BellSouth Order Number<br>• Committed Due Date (DD)<br>• Completion Date (CMPLTN DD)<br>• Status Type<br>• Status Notice Date<br>• Standard Order Activity<br>• Geographic Scope |

## SQM Disaggregation - Analog/Benchmark

| SQM LEVEL of Disaggregation | SQM Analog/Benchmark |
|---|---|
| • Resale Residence | • Retail Residence |
| • Resale Business | • Retail Business |
| • Resale Design | • Retail Design |
| • Resale PBX | • Retail PBX |
| • Resale Centrex | • Retail Centrex |
| • Resale ISDN | • Retail ISDN |
| • LNP (Standalone) | • Retail Residence and Business (POTS) |
| • INP (Standalone) | • Retail Residence and Business (POTS) |
| • 2W Analog Loop Design | • Retail Residence and Business Dispatch |
| • 2W Analog Loop Non-Design | • Retail Residence and Business - POTS Excluding Switch-Based Orders |
| • 2W Analog Loop With LNP - Design | • Retail Residence and Business Dispatch |
| • 2W Analog Loop With LNP- Non-Design | • Retail Residence and Business - POTS Excluding Switch-Based Orders |
| • 2W Analog Loop With INP-Design | • Retail Residence and Business Dispatch |
| • 2W Analog Loop With INP-Non-Design | • Retail Residence and Business - POTS Excluding Switch-Based Orders |
| • UNE Digital Loop < DS1 | • Retail Digital Loop < DS1 |
| • UNE Digital Loop ≥ DS1 | • Retail Digital Loop ≥ DS1 |
| • UNE Loop + Port Combinations<br>- Dispatch In<br>- Switch Based | • Retail Residence and Business<br>- Dispatch In<br>- Switch Based |
| • UNE Switch Ports | • Retail Residence and Business (POTS) |
| • UNE Combo Other | • Retail Residence, Business and Design Dispatch |
| • UNE xDSL (HDSL, ADSL and UCL)<br>- Without Conditioning<br>- With Conditioning | • ADSL Provided to Retail<br>- Without Conditioning<br>- With Conditioning (BellSouth does not offer this service to Retail) |
| • UNE ISDN (Includes UDC) | • Retail ISDN - BRI |
| • UNE Line Sharing | • ADSL Provided to Retail |
| • UNE Other Design | • Retail Design |
| • UNE Other Non-Design | • Retail Residence and Business |
| • Local Transport (Unbundled Interoffice Transport) | • Retail DS1/DS3 Interoffice |
| • Local Interconnection Trunks | • Parity with Retail |
| • UNE Line Splitting | • ADSL to Retail |
| • EELs | • Retail DS1/DS3 |

## SEEM Measure

| SEEM Measure | | |
|---|---|---|
| Yes | Tier I | X |
| | Tier II | X |

## SEEM Disaggregation - Analog/Benchmark

| SEEM Disaggregation | SEEM Analog/Benchmark |
|---|---|
| • Resale Residence | • Retail Residence |
| • Resale Business | • Retail Business |
| • Resale Design | • Retail Design |
| • Resale PBX | • Retail PBX |
| • Resale Centrex | • Retail Centrex |
| • Resale ISDN | • Retail ISDN |
| • LNP (Standalone) | • Retail Residence and Business (POTS) |
| • INP (Standalone) | • Retail Residence and Business (POTS) |
| • 2W Analog Loop Design | • Retail Residence and Business Dispatch |
| • 2W Analog Loop Non-Design | • Retail Residence and Business - POTS Excluding Switch-Based Orders |
| • 2W Analog Loop With LNP - Design | • Retail Residence and Business Dispatch |
| • 2W Analog Loop With LNP- Non-Design | • Retail Residence and Business - POTS Excluding Switch-Based Orders |
| • 2W Analog Loop With INP-Design | • Retail Residence and Business Dispatch |
| • 2W Analog Loop With INP-Non-Design | • Retail Residence and Business - POTS Excluding Switch-Based Orders |
| • UNE Digital Loop < DS1 | • Retail Digital Loop < DS1 |
| • UNE Digital Loop ≥ DS1 | • Retail Digital Loop ≥ DS1 |
| • UNE Loop + Port Combinations<br>- Dispatch In<br>- Switch Based | • Retail Residence and Business<br>- Dispatch In<br>- Switch Based |
| • UNE Switch Ports | • Retail Residence and Business (POTS) |
| • UNE Combo Other | • Retail Residence, Business and Design Dispatch |
| • UNE xDSL (HDSL, ADSL and UCL)<br>- Without Conditioning<br>- With Conditioning | • ADSL Provided to Retail<br>- Without Conditioning<br>- With Conditioning (BellSouth does not offer this service to Retail) |
| • UNE ISDN (Includes UDC) | • Retail ISDN - BRI |
| • UNE Line Sharing | • ADSL Provided to Retail |
| • Local Transport (Unbundled Interoffice Transport) | • Retail DS1/DS3 Interoffice |
| • Local Interconnection Trunks | • Parity with Retail |
| • UNE Line Splitting | • ADSL Provided to Retail |
| • UNE Other Design | • Retail Design |
| • UNE Other Non-Design | • Retail Residence and Business |
| • EELs | • Retail DS1/DS3 |

# P-4: Average Completion Interval (OCI) & Order Completion Interval Distribution

## (This metric not ordered by the FPSC)

### Definition

The "average completion interval" measure monitors the interval of time it takes BellSouth to provide service for the CLEC or its own customers. The "Order Completion Interval Distribution" provides the percentages of orders completed within certain time periods. This report measures how well BellSouth meets the interval offered to customers on service orders.

### Exclusions

- Canceled Service Orders
- Order Activities of BellSouth or the CLEC associated with internal or administrative use of local services (Record Orders, Listing Orders, Test Orders, etc.)
- Disconnect (D&F) orders (Except "D" orders associated with LNP Standalone)
- "L" Appointment coded orders (where the customer has requested a later than offered interval)
- End user-caused misses

### Business Rules

The actual completion interval is determined for each order processed during the reporting period. The completion interval is the elapsed time from when BellSouth issues a FOC or SOCS date time stamp receipt of an order from the CLEC to BellSouth's actual order completion date. The clock starts when a valid order number is assigned by SOCS and stops when the technician or system completes the order in SOCS. Elapsed time for each order is accumulated for each reporting dimension. The accumulated time for each reporting dimension is then divided by the associated total number of orders completed. Orders that are worked on zero due dates are calculated with a .33-day interval (8 hours) in order to report a portion of a day interval. These orders are issued and worked/completed on the same day. They can be either flow through orders (no field work-non-dispatched) or field orders (dispatched).

The interval breakout for UNE and Design is: 0-5 = 0-< 5, 5-10 = 5-<10, 10-15 = 10-< 15, 15-20 = 15- < 20, 20-25 = 20-< 25, 25-30 = 25-< 30, ≥ 30 = 30 and greater.

#### Calculation

**Completion Interval** = (a - b)

- a = Completion Date
- b = FOC/SOCS date time-stamp (application date)

**Average Completion Interval** = (c ÷ d)

- c = Sum of all Completion Intervals
- d = Count of Orders Completed in Reporting Period

**Order Completion Interval Distribution** (for each interval) = (e ÷ f) X 100

- e = Service Orders Completed in "X" days
- f = Total Service Orders Completed in Reporting Period

### Report Structure

- CLEC Specific
- CLEC Aggregate
- BellSouth Aggregate
- Dispatch/Non-Dispatch categories applicable to all levels except trunks
- Residence & Business reported in day intervals = 0,1,3,4,5,5+
- UNE and Design reported in day intervals =0-5,5-10,10-15,15-20,20-25,25-30,≥ 30
- All Levels are reported <10 line/circuits; ≥ 10 line/circuits (except trunks)
- ISDN Orders included in Non-Design

## Data Retained

| Relating to CLEC Experience | Relating to BellSouth Performance |
|---|---|
| • Report Month<br>• CLEC Company Name<br>• Order Number (PON)<br>• Application Date & Time<br>• Completion Date (CMPLTN_DT)<br>• Service Type (CLASS_SVC_DESC)<br>• Geographic Scope<br>**Note:** Code in parentheses is the corresponding header found in the raw data file. | • Report Month<br>• BellSouth Order Number<br>• Order Submission Date & Time<br>• Order Completion Date & Time<br>• Service Type<br>• Geographic Scope |

## SQM Disaggregation - Analog/Benchmark

| SQM LEVEL of Disaggregation | SQM Analog/Benchmark |
|---|---|
| • Resale Residence | • Retail Residence |
| • Resale Business | • Retail Business |
| • Resale Design | • Retail Design |
| • Resale PBX | • Retail PBX |
| • Resale Centrex | • Retail Centrex |
| • Resale ISDN | • Retail ISDN |
| • LNP (Standalone) | • Retail Residence and Business (POTS) |
| • INP (Standalone) | • Retail Residence and Business (POTS) |
| • 2W Analog Loop Design | • Retail Residence and Business Dispatch |
| • 2W Analog Loop Non-Design | • Retail Residence and Business - POTS Excluding Switch-Based Orders |
| • 2W Analog Loop With LNP - Design | • Retail Residence and Business Dispatch |
| • 2W Analog Loop With LNP- Non-Design | • Retail Residence and Business - POTS Excluding Switch-Based Orders |
| • 2W Analog Loop With INP-Design | • Retail Residence and Business Dispatch |
| • 2W Analog Loop With INP-Non-Design | • Retail Residence and Business - POTS Excluding Switch-Based Orders |
| • UNE Digital Loop < DS1 | • Retail Digital Loop < DS1 |
| • UNE Digital Loop ≥ DS1 | • Retail Digital Loop ≤ DS1 |
| • UNE Loop + Port Combinations<br>- Dispatch In<br>- Switch Based | • Retail Residence and Business<br>- Dispatch In<br>- Switch Based |
| • UNE Switch Ports | • Retail Residence and Business (POTS) |
| • UNE Combo Other | • Retail Residence, Business and Design Dispatch |
| • UNE xDSL (HDSL, ADSL and UCL)<br>- Without Conditioning<br>- With Conditioning | <br>- ≤ 5 Days<br>- ≤ 12 Days |
| • UNE ISDN (Includes UDC) | • Retail ISDN - BRI |
| • UNE Line Sharing | • ADSL Provided to Retail |
| • Local Transport (Unbundled Interoffice Transport) | • Retail DS1/DS3 Interoffice |
| • Local Interconnection Trunks | • Parity with Retail |

| SQM LEVEL of Disaggregation | SQM Analog/Benchmark |
|---|---|
| • UNE Line Splitting | • ADSL to Retail |
| • UNE Other Design | • Retail Design |
| • UNE Other Non-Design | • Retail Residence and Business |
| • EELs | • Retail DS1/DS3 |

## SEEM Measure

| SEEM Measure | | |
|---|---|---|
| No | Tier I | |
| | Tier II | |

## SEEM Disaggregation - Analog/Benchmark

| SEEM Disaggregation | SEEM Analog/Benchmark |
|---|---|
| • Not Applicable | • Not Applicable |

# P-4A: Average Order Completion and Completion Notice Interval (AOCCNI) Distribution



## Definition

The "Order Completion And Completion Notice Interval Distribution" provides the percentages of orders completed within certain time periods. This report measures how well BellSouth meets the interval offered to customers and notice of completion to the CLEC on service orders.

## Exclusions

- Canceled Service Orders
- Order Activities of BellSouth or the CLEC associated with internal or administrative use of local services (Record Orders, Listing Orders, Test Orders, etc.) Test order types may be C, N, R, or T.
- Disconnect (D&F) orders (Except "D" orders associated with LNP Standalone)
- "L" Appointment coded orders (where the customer has requested a later than offered interval)
- End user-caused misses

## Business Rules

The interval is determined for each order processed during the reporting period. The completion interval for AOCCNI is the elapsed time from when BellSouth issues a FOC or SOCS date time stamp receipt of an order from the CLEC to BellSouth's return of the completion notice (CN) to the CLEC. Elapsed time for each order is accumulated for each reporting dimension. The accumulated time for each reporting dimension is then divided by the associated total number of orders completed. Orders that are worked on zero due dates are calculated with a .33-day interval (8 hours) in order to report a portion of a day interval. These orders are issued and worked/completed on the same day. They can be either flow through orders (no field work-non-dispatched) or field orders (dispatched).

The interval breakout for UNE and Design is: 0-5 = 0-< 5, 5-10 = 5-<10, 10-15 = 10-< 15, 15-20 = 15- < 20, 20-25 = 20-< 25, 25-30 = 25-< 30, ≥ 30 = 30 and greater.

### Calculation

Completion Interval = (a - b)

- a = Date and Time Completion Notice is sent
- b = FOC/SOCS date time-stamp (application date)

Average Completion Interval = (c ÷ d)

- c = Sum of all Completion Intervals
- d = Count of Orders Completed in Reporting Period

Order Completion Interval Distribution (for each interval) = (e ÷ f) X 100

- e = Service Orders Completed in "X" days
- f = Total Service Orders Completed in Reporting Period

## Report Structure

- CLEC Specific
- CLEC Aggregate
- BellSouth Aggregate
- Dispatch/Non-Dispatch categories applicable to all levels except trunks
- Residence & Business reported in day intervals = 0,1,2,3,4,5,5+
- UNE and Design reported in day intervals = 0-5, 5-10, 10-15, 15-20, 20-25, 25-30, ≥ 30
- All Levels are reported <10 line/circuits; ≥ 10 line/circuits (except trunks)
- ISDN Orders included in Non-Design
- Mechanized/Non-Mechanized (Non-Mechanized is not applicable to BellSouth)

## Data Retained

| Relating to CLEC Experience | Relating to BellSouth Performance |
|---|---|
| • Report Month<br>• CLEC Company Name<br>• Order Number (PON)<br>• Application Date & Time<br>• Completion Date (CMPLTN_DT)<br>• Service Type (CLASS_SVC_DESC)<br>• Geographic Scope<br>**Note:** Code in parentheses is the corresponding header found in the raw data file. | • Report Month<br>• BellSouth Order Number<br>• Order Submission Date & Time<br>• Order Completion Date & Time<br>• Service Type<br>• Geographic Scope |

## SQM Disaggregation - Analog/Benchmark

| SQM Level of Disaggregation | SQM Analog/Benchmark |
|---|---|
| • Resale Residence | • Retail Residence |
| • Resale Business | • Retail Business |
| • Resale Design | • Retail Design |
| • Resale PBX | • Retail PBX |
| • Resale Centrex | • Retail Centrex |
| • Resale ISDN | • Retail ISDN |
| • LNP (Standalone) | • Retail Residence and Business (POTS) |
| • INP (Standalone) | • Retail Residence and Business (POTS) |
| • 2W Analog Loop Design | • Retail Residence and Business Dispatch |
| • 2W Analog Loop Non-Design | • Retail Residence and Business - POTS Excluding Switch-Based Orders |
| • 2W Analog Loop With LNP - Design | • Retail Residence and Business Dispatch |
| • 2W Analog Loop With LNP- Non-Design | • Retail Residence and Business - POTS Excluding Switch-Based Orders |
| • 2W Analog Loop With INP-Design | • Retail Residence and Business Dispatch |
| • 2W Analog Loop With INP-Non-Design | • Retail Residence and Business - POTS Excluding Switch-Based Orders |
| • UNE Digital Loop < DS1 | • Retail Digital Loop < DS1 |
| • UNE Digital Loop ≥ DS1 | • Retail Digital Loop ≤ DS1 |
| • UNE Loop + Port Combinations<br>- Dispatch In<br>- Switch Based | • Retail Residence and Business<br>- Dispatch In<br>- Switch Based |
| • UNE Switch Ports | • Retail Residence and Business (POTS) |
| • UNE Combo Other | • Retail Residence, Business and Design Dispatch |
| • UNE xDSL (HDSL, ADSL and UCL)<br>- Without Conditioning<br>- With Conditioning | <br>- ≤ 5 Days<br>- ≤ 12 Days |
| • UNE ISDN (Includes UDC) | • Retail ISDN - BRI |
| • UNE Line Sharing | • ADSL Provided to Retail |
| • Local Transport (Unbundled Interoffice Transport) | • Retail DS1/DS3 Interoffice |
| • Local Interconnection Trunks | • Parity with Retail |

| SQM Level of Disaggregation | SQM Analog/Benchmark |
|---|---|
| • UNE Line Splitting | • ADSL to Retail |
| • UNE Other Design | • Retail Design |
| • UNE Other Non-Design | • Retail Residence and Business |
| • EELs | • Retail DS1/DS3 |

## SEEM Measure

| SEEM Measure | | |
|---|---|---|
| Yes | Tier I | X |
| | Tier II | X |

## SEEM Disaggregation - Analog/Benchmark

| SEEM Disaggregation | SEEM Analog/Benchmark |
|---|---|
| • Resale Residence | • Retail Residence |
| • Resale Business | • Retail Business |
| • Resale Design | • Retail Design |
| • Resale PBX | • Retail PBX |
| • Resale Centrex | • Retail Centrex |
| • Resale ISDN | • Retail ISDN |
| • LNP (Standalone) | • Retail Residence and Business (POTS) |
| • INP (Standalone) | • Retail Residence and Business (POTS) |
| • 2W Analog Loop Design | • Retail Residence and Business Dispatch |
| • 2W Analog Loop Non-Design | • Retail Residence and Business - POTS Excluding Switch-Based Orders |
| • 2W Analog Loop With LNP - Design | • Retail Residence and Business Dispatch |
| • 2W Analog Loop With LNP- Non-Design | • Retail Residence and Business - POTS Excluding Switch-Based Orders |
| • 2W Analog Loop With INP-Design | • Retail Residence and Business Dispatch |
| • 2W Analog Loop With INP-Non-Design | • Retail Residence and Business - POTS Excluding Switch-Based Orders |
| • UNE Digital Loop < DS1 | • Retail Digital Loop < DS1 |
| • UNE Digital Loop ≥ DS1 | • Retail Digital Loop ≤ DS1 |
| • UNE Loop + Port Combinations<br>- Dispatch In<br>- Switch Based | • Retail Residence and Business<br>- Dispatch In<br>- Switch Based |
| • UNE Switch Ports | • Retail Residence and Business (POTS) |
| • UNE Combo Other | • Retail Residence, Business and Design Dispatch |
| • UNE xDSL (HDSL, ADSL and UCL)<br>- Without Conditioning<br>- With Conditioning | <br>- ≤ 5 Days<br>- ≤ 12 Days |
| • UNE ISDN (Includes UDC) | • Retail ISDN - BRI |
| • UNE Line Sharing | • ADSL Provided to Retail |
| • Local Transport (Unbundled Interoffice Transport) | • Retail DS1/DS3 Interoffice |

| SEEM Disaggregation | SEEM Analog/Benchmark |
|---|---|
| • Local Interconnection Trunks | • Parity with Retail |
| • UNE Line Splitting | • ADSL Provided to Retail |
| • UNE Other Design | • Retail Design |
| • UNE Other Non-Design | • Retail Residence and Business |
| • EELs | • Retail DS1/DS3 |

# P-5: Average Completion Notice Interval

## Definitions

The Completion Notice Interval is the elapsed time between the BellSouth reported completion of work and the issuance of a valid completion notice to the CLEC.

## Exclusions

- Cancelled Service Orders
- Order Activities of BellSouth or the CLEC associated with internal or administrative use of local services (Record Orders, Listing Orders, Test Orders, etc.) Test order types may be C, N, R, or T.
- D&F orders (Exception: "D" orders associated with LNP Standalone)

## Business Rules

Measurement on interval of completion date and time entered by a field technician on dispatched orders, and 5PM start time on the due date for non-dispatched orders; to the release of a notice to the CLEC/BellSouth of the completion status. The field technician notifies the CLEC the work was complete and then he/she enters the completion time stamp information in his/her computer. This information switches through to the SOCS systems either completing the order or rejecting the order to the Work Management Center (WMC). If the completion is rejected, it is manually corrected and then completed by the WMC. The notice is returned on each individual order.

The start time for all orders is the completion stamp either by the field technician or the 5PM due date stamp; the end time for mechanized orders is the time stamp the notice was transmitted to the CLEC interface (LENS, EDI, OR TAG). For non-mechanized orders the end time will be date and timestamp of order update from the FAX record via LON or C-SOTS system.

## Calculation

Completion Notice Interval = (a - b)

- a = Date and Time of Notice of Completion
- b = Date and Time of Work Completion

Average Completion Notice Interval = c ÷ d

- c = Sum of all Completion Notice Intervals
- d = Number of Orders with Notice of Completion in Reporting Period

## Report Structure

- CLEC Specific
- CLEC Aggregate
- BellSouth Aggregate
- Mechanized Orders
- Non-Mechanized Orders
- Dispatch/Non-Dispatch
- Reporting intervals in Hours; 0,1-2,2-4,4-8,8-12,12-24, ≥ 24 plus Overall Average Hour Interval (The categories are inclusive of these time intervals: 0-1 = 0.99; 1-2 =1-1.99; 2-4 = 2-3.99, etc.)
- Reported in categories of <10 line / circuits; ≥ 10 line/circuits (except trunks)

## Data Retained

| Relating to CLEC Experience | Relating to BellSouth Performance |
|---|---|
| • Report Month<br>• CLEC Order Number (so_nbr)<br>• Work Completion Date (cmpltn_dt)<br>• Work Completion Time<br>• Completion Notice Availability Date<br>• Completion Notice Availability Time<br>• Service Type<br>• Geographic Scope<br>**Note:** Code in parentheses is the corresponding header found in the raw data file. | • Report Month<br>• BellSouth Order Number (so_nbr)<br>• Work Completion Date (cmpltn_dt)<br>• Work Completion Time<br>• Completion Notice Availability Date<br>• Completion Notice Availability Time<br>• Service Type<br>• Geographic Scope<br>**NOTE:** Code in parentheses is the corresponding header found in the raw data file. |

## SQM Disaggregation - Analog/Benchmark

| SQM LEVEL of Disaggregation | SQM Analog/Benchmark |
|---|---|
| • Resale Residence | • Retail Residence |
| • Resale Business | • Retail Business |
| • Resale Design | • Retail Design |
| • Resale PBX | • Retail PBX |
| • Resale Centrex | • Retail Centrex |
| • Resale ISDN | • Retail ISDN |
| • LNP (Standalone) | • Retail Residence and Business (POTS) |
| • INP (Standalone) | • Retail Residence and Business (POTS) |
| • 2W Analog Loop Design | • Retail Residence and Business Dispatch |
| • 2W Analog Loop Non-Design | • Retail Residence and Business - POTS Excluding Switch-Based Orders |
| • 2W Analog Loop With LNP - Design | • Retail Residence and Business Dispatch |
| • 2W Analog Loop With LNP- Non-Design | • Retail Residence and Business - POTS Excluding Switch-Based Orders |
| • 2W Analog Loop With INP-Design | • Retail Residence and Business Dispatch |
| • 2W Analog Loop With INP-Non-Design | • Retail Residence and Business - POTS Excluding Switch-Based Orders |
| • UNE Digital Loop < DS1 | • Retail Digital Loop < DS1 |
| • UNE Digital Loop ≥ DS1 | • Retail Digital Loop ≤ DS1 |
| • UNE Loop + Port Combinations<br>- Dispatch In<br>- Switch Based | • Retail Residence and Business<br>- Dispatch In<br>- Switch Based |
| • UNE Switch Ports | • Retail Residence and Business (POTS) |
| • UNE Combo Other | • Retail Residence, Business and Design Dispatch |
| • UNE xDSL (HDSL, ADSL and UCL) | • ADSL Provided to Retail |
| • UNE ISDN (Includes UDC) | • Retail ISDN - BRI |
| • UNE Line Sharing | • ADSL Provided to Retail |
| • Local Transport (Unbundled Interoffice Transport) | • Retail DS1/DS3 Interoffice |
| • Local Interconnection Trunks | • Parity with Retail |

| SQM LEVEL of Disaggregation | SQM Analog/Benchmark |
|---|---|
| • UNE Line Splitting | • ADSL to Retail |
| • UNE Other Design | • Retail Design |
| • UNE Other Non-Design | • Retail Residence and Business |
| • EELs | • Retail DS1/DS3 |

## SEEM Measure

| SEEM Measure | | |
|---|---|---|
| No | Tier I | |
| | Tier II | |

## SEEM Disaggregation - Analog/Benchmark

| SEEM Disaggregation | SEEM Analog/Benchmark |
|---|---|
| • Not Applicable | • Not Applicable |

# P-6: % Completions/Attempts without Notice or < 24 hours Notice

## Definition

The purpose of this measure is to report if BellSouth is returning a FOC to the CLEC in time for the CLEC to notify their customer of the scheduled date.

## Exclusions

- Cancelled Orders
- Expedited Orders
- "0" dated orders or any request where the subscriber requested an earlier due date of < 24 hours prior to the original commitment date, or any LSR received < 24 hours prior to the original commitment date.

## Business Rules

**For CLEC Results**:

Calculation would exclude any successful or unsuccessful service delivery where the CLEC was informed at least 24 hours in advance. BellSouth may also exclude from calculation any LSRs received from the requesting CLEC with less than 24 hour notice prior to the commitment date.

**For BellSouth Results**:

BellSouth does not provide a FOC to its retail customers.

## Calculation

**Percent Completions or Attempts without Notice or with Less Than 24 Hours Notice** = (a ÷ b) X 100

- a = Completion Dispatches (Successful and Unsuccessful) With No FOC or FOC Received < 24 Hours of Original Committed Due Date
- b = All Completions

## Report Structure

- CLEC Specific
- CLEC Aggregate
- Dispatch /Non-Dispatch
- Total Orders FOC < 24 Hours
- Total Completed Service Orders
- % FOC < 24 Hours

## Data Retained

| Relating to CLEC Experience | Relating to BellSouth Performance |
|---|---|
| • Committed Due Date (DD)<br>• FOC End Timestamp<br>• Report Month<br>• CLEC Order Number and PON<br>• Geographic Scope<br>- State / Region | • Not Applicable |

## SQM Disaggregation - Analog/Benchmark

| SQM Level of Disaggregation | SQM Analog/Benchmark |
|---|---|
| • Resale Residence<br>• Resale Business<br>• Resale Design<br>• Resale PBX<br>• Resale Centrex<br>• Resale ISDN<br>• LNP (Standalone)<br>• INP (Standalone)<br>• 2W Analog Loop Design<br>• 2W Analog Loop Non-Design<br>• 2W Analog Loop Design With LNP<br>• 2W Analog Loop Non-Design With LNP<br>• 2W Analog Loop Design With INP<br>• 2W Analog Loop Non-Design With INP<br>• UNE Digital Loop < DS1<br>• UNE Digital Loop ≥DS1<br>• UNE Loop + Port Combinations<br>- Dispatch In<br>- Switch Based<br>• UNE Switch ports<br>• UNE Combo Other<br>• UNE xDSL (HDSL, ADSL and UCL)<br>• UNE ISDN (Includes UDC)<br>• UNE Line Sharing<br>• UNE Line Splitting<br>• Local Transport (Unbundled Interoffice Transport)<br>• Local Interconnection Trunks<br>• EELS | • <= 5% |

## SEEM Measure

| SEEM Measure | | |
|---|---|---|
| No | Tier I | |
| | Tier II | |

## SEEM Disaggregation - Analog/Benchmark

| SEEM Disaggregation | SEEM Analog/Benchmark |
|---|---|
| • Not Applicable | • Not Applicable |

# P-7: Coordinated Customer Conversions Interval

## Definition

This report measures the average time it takes BellSouth to disconnect an unbundled loop from the BellSouth switch and cross connect it to CLEC equipment. This measurement applies to service orders with INP and LNP, and where the CLEC has requested BellSouth to provide a coordinated cutover.

**Exclusions**

- Any order canceled by the CLEC will be excluded from this measurement.
- Delays due to CLEC following disconnection of the unbundled loop
- Unbundled Loops where there is no existing subscriber loop and loops where coordination is not requested.

## Business Rules

Where the service order includes LNP, the interval includes the total time for the cutover including the translation time to place the line back in service on the ported line. When the service order includes INP, the interval includes the total time for the cutover including the translation time to place the link back in service on the ported line. The interval is calculated for the entire cutover time for the service order and then divided by items worked in that time to give the average per-item interval for each service order.

## Calculation

**Coordinated Customer Conversions Interval** = (a - b)

- a = Completion Date and Time for Cross Connection of a Coordinated Unbundled Loop
- b = Disconnection Date and Time of an Coordinated Unbundled Loop

**Percent Coordinated Customer Conversions** (for each interval) = (c ÷ d) X 100

- c = Total number of Coordinated Customer Conversions for each interval
- d = Total Number of Unbundled Loop with Coordinated Conversions (items) for the reporting period

## Report Structure

- CLEC Specific
- CLEC Aggregate
- The interval breakout is 0-5 = 0-≤5, 5-15 = >5-≤15, ≥15 = 15 and greater, plus Overall Average Interval.

## Data Retained

| Relating to CLEC Experience | Relating to BellSouth Performance |
|---|---|
| • Report Month<br>• CLEC Order Number<br>• Committed Due Date (DD)<br>• Service Type (CLASS_SVC_DESC)<br>• Cutover Start Time<br>• Cutover Completion time<br>• Portability Start and Completion Times (INP orders)<br>• Total Conversions (Items)<br>**Note:** Code in parentheses is the corresponding header found in the raw data file. | • No BellSouth Analog Exists |

## SQM Disaggregation - Analog/Benchmark

| SQM Level of Disaggregation | SQM Analog/Benchmark |
|---|---|
| • Unbundled Loops with INP | • 95% ≤ 15 minutes |
| • Unbundled Loops with LNP | • 95% ≤ 15 minutes |

## SEEM Measure

| SEEM Measure | | |
|---|---|---|
| Yes | Tier I | X |
| | Tier II | X |

## SEEM Disaggregation - Analog/Benchmark

| SEEM Disaggregation | SEEM Analog/Benchmark |
|---|---|
| • Unbundled Loops With INP<br>• Unbundled Loops With LNP | • 95% ≤ 15 minutes<br>• 95% ≤ 15 minutes |

# P-7A: Coordinated Customer Conversions – Hot Cut Timeliness % Within Interval and Average Interval



## Definition

This category measures whether BellSouth begins the cutover of an unbundled loop on a coordinated and/or a time specific order at the CLEC requested start time. It measures the percentage of orders where the cut begins within 15 minutes of the requested start time of the order and the average interval.

## Exclusions

- Any order canceled by the CLEC will be excluded from this measurement.
- Delays caused by the CLEC
- Unbundled Loops where there is no existing subscriber loop and loops where coordination is not requested.
- All unbundled loops on multiple loop orders after the first loop.

## Business Rules

This report measures whether BellSouth begins the cutover of an unbundled loop on a coordinated and/or a time specific order at the CLEC requested start time. The cut is considered on time if it starts 15 minutes before or after the requested start time. Using the scheduled time and the actual cutover start time, the measurement will calculate the percent within interval and the average interval. If a cut involves multiple lines, the cut will be considered "on time" if the first line is cut within the interval. ≤ 15 minutes includes intervals that began 15:00 minutes or less before the scheduled cut time and cuts that began 15 minutes or less after the scheduled cut time; >15 minutes, ≤30 minutes includes cuts within 15:00 – 30:00 minutes either prior to or after the scheduled cut time; >30 minutes includes cuts greater than 30:00 minutes either prior to or after the scheduled cut time. If IDLC is involved, a four hour window applies to the start time. (8 A.M. to Noon or 1 P.M. to 5 P.M.) This only applies if BellSouth notifies the CLEC by 10:30 A.M. on the day before the due date that the service is on IDLC.

A Hot Cut is considered complete when one of the following occurs:

1. BellSouth performs the hot cut, notifies the CLEC by telephone.
2. BellSouth performs the hot cut and attempts to notify the CLEC by telephone, but receives no answer and leaves a phone message.

## Calculation

**% within Interval** = (a ÷ b) X 100

- a = Total Number of Coordinated Unbundled Loop Orders for the interval
- b = Total Number of Coordinated Unbundled Loop Orders for the reporting period

**Interval** = (c - d)

- c = Scheduled Time for Cross Connection of a Coordinated Unbundled Loop Order
- d = Actual Start Date and Time of a Coordinated Unbundled Loop Order

**Average Interval** = (e ÷ f)

- Sum of all Intervals
- Total Number of Coordinated Unbundled Loop Orders for the reporting period.

## Report Structure

- CLEC Specific
- CLEC Aggregate
  Reported in intervals of early, on time and late cuts %≤ 15 minutes; % >15 minutes, ≤30 minutes; % >30 minutes, plus Overall Average Interval

## Data Retained

| Relating to CLEC Experience | Relating to BellSouth Performance |
|---|---|
| • Report Month<br>• CLEC Order Number (so_nbr)<br>• Committed Due Date (DD)<br>• Service Type (CLASS_SVC_DESC)<br>• Cutover Scheduled Start Time<br>• Cutover Actual Start Time<br>• Total Conversions Orders<br>**Note:** Code in parentheses is the corresponding header found in the raw data file. | • No BellSouth Analog exists |

## SQM Disaggregation - Analog/Benchmark

| SQM Level of Disaggregation | SQM Analog/Benchmark |
|---|---|
| • Product Reporting Level<br>- SL1 Time Specific<br>- SL1 Non-Time Specific<br>- SL2 Time Specific<br>- SL2 Non-Time Specific | • 95% Within + or – 15 Minutes of Scheduled Start Time |
| - SL1 IDLC<br>- SL2 IDLC | • 95% Within 4-hour Window |

## SEEM Measure

| SEEM Measure | | |
|---|---|---|
| Yes | Tier I | X |
| | Tier II | X |

## SEEM Disaggregation - Analog/Benchmark

| SEEM Disaggregation | SEEM Analog/Benchmark |
|---|---|
| - SL1 Time Specific<br>- SL1 Non-Time Specific<br>- SL2 Time Specific<br>- SL2 Non-Time Specific | • 95% Within + or – 15 Minutes of Scheduled Start Time |
| - SL1 IDLC<br>- SL2 IDLC | • 95% Within 4-hour Window |

# P-7B: Coordinated Customer Conversions – Average Recovery Time



## Definition

Measures the time between notification and resolution by BellSouth of a service outage found that can be isolated to the BellSouth side of the network. The time between notification and resolution by BellSouth must be measured to ensure that CLEC customers do not experience unjustifiable lengthy service outages during a Coordinated Customer Conversion. This report measures outages associated with Coordinated Customer Conversions prior to service order completion.

## Exclusions

- Cutovers where service outages are due to CLEC caused reasons when the CLEC agrees
- Cutovers where service outages are due to end-user caused reasons when the CLEC agrees

## Business Rules

Measures the outage duration time related to Coordinated Customer Conversions from the initial trouble notification until the trouble has been restored and the CLEC has been notified. The duration time is defined as the time from the initial trouble notification until the trouble has been restored and the CLEC has been notified. The interval is calculated on the total outage time for the circuits divided by the total number of outages restored during the report period to give the average outage duration.

## Calculation

**Recovery Time** = (a - b)

- a = Date & Time That Trouble is Closed by CLEC
- b = Date & Time Initial Trouble is Opened with BellSouth

**Average Recovery Time** = (c ÷ d)

- c = Sum of all the Recovery Times
- d = Number of Troubles Referred to the BellSouth

## Report Structure

- CLEC Specific
- CLEC Aggregate

## Data Retained

| Relating to CLEC Experience | Relating to BellSouth Performance |
|---|---|
| • Report Month<br>• CLEC Company Name<br>• CLEC Order Number (so_nbr)<br>• Committed Due Date (DD)<br>• Service Type (CLASS_SVC_DESC)<br>• CLEC Acceptance Conflict (CLEC_CONFLICT)<br>• CLEC Conflict Resolved (CLEC_CON_RES)<br>• CLEC Conflict MFC (CLEC_CONFLICT_MFC)<br>• Total Conversion Orders<br>**Note:** Code in parentheses is the corresponding header found in the raw data file. | • None |

## SQM Disaggregation - Analog/Benchmark

| SQM Level of Disaggregation | SQM Analog/Benchmark |
|---|---|
| • Unbundled Loops with INP<br>• Unbundled Loops with LNP | • Diagnostic (To Be Established at The 6 Month Review Period) |

## SEEM Measure

| SEEM Measure | | |
|---|---|---|
| No | Tier I | |
| | Tier II | |

## SEEM Disaggregation - Analog/Benchmark

| SEEM Disaggregation | SEEM Analog/Benchmark |
|---|---|
| • Not Applicable | • Not Applicable |

# P-7C: Hot Cut Conversions - % Provisioning Troubles Received Within 7 days of a completed Service Order

## Definition

The Percent Provisioning Troubles received within 7 days of a completed service order associated with a Hot Cut Conversion (CCC) measures the quality and accuracy of Coordinated Customer Conversion Activities.

## Exclusions

- Any order canceled by the CLEC
- Troubles caused by Customer Provided Equipment

## Business Rules

Measures the quality and accuracy of completed service orders associated with Coordinated and Non-coordinated Customer Conversions. The first trouble report received on a circuit ID within 7 days following a service order completion is counted in this measure. Subsequent trouble reports are measured in Repeat Report Rate. Reports are calculated searching in the prior report period for completed Coordinated Customer Conversion service orders and following 7 days after the completion of the service order for a trouble report issue date.

## Calculation

**% Provisioning Troubles within 7 days of service order completion** = (a ÷ b) X 100

- a = The sum of all CCC Circuits with a trouble within 7 days following service order(s) completion
- b = The total number of CCC service order circuits completed in the previous report calendar month

## Report Structure

- CLEC Specific
- CLEC Aggregate
- Dispatch/Non-Dispatch

## Data Retained

| Relating to CLEC Experience | Relating to BellSouth Performance |
|---|---|
| • Report Month<br>• CLEC Order Number (so_nbr)<br>• PON<br>• Order Submission Date (TICKET_ID)<br>• Order Submission Time (TICKET_ID)<br>• Status Type<br>• Status Notice Date<br>• Standard Order Activity<br>• Geographic Scope<br>• Total Conversion Circuits<br>**Note:** Code in parentheses is the corresponding header found in the raw data file. | • No BellSouth Analog exists |

## SQM Disaggregation - Analog/Benchmark

| SQM Level of Disaggregation | SQM Analog/Benchmark |
|---|---|
| • UNE Loop Design<br>• UNE Loop Non-Design | • ≤ 5% (To be reviewed after six month period) |

## SEEM Measure

| SEEM Measure | | |
|---|---|---|
| Yes | Tier I | X |
| | Tier II | X |

## SEEM Disaggregation - Analog/Benchmark

| SEEM Disaggregation | SEEM Analog/Benchmark |
|---|---|
| • UNE Loop Design<br>• UNE Loop Non-Design | • ≤ 5% (To be reviewed after six month period) |

# P-8: Cooperative Acceptance Testing - % of xDSL Loops Successfully Tested



## Definition

A loop will be considered successfully cooperatively tested when both the CLEC and ILEC representatives agree that the loop has passed the cooperative testing.

## Exclusions

- Testing failures due to CLEC (incorrect contact number, CLEC not ready, etc.)
- xDSL lines with no request for cooperative testing

## Business Rules

When a BellSouth technician finishes delivering an order for an xDSL loop where the CLEC order calls for cooperative testing at the customer's premise, the BellSouth technician is to call a toll free number to the CLEC testing center. The BellSouth technician and the CLEC representative at the center then test the line. As an example of the type of testing performed, the testing center may ask the technician to put a short on the line so that the center can run a test to see if it can identify the short. CLEC caused failures will be captured in the raw data files.

## Calculation

**Cooperative Acceptance Testing - % of xDSL Loops Successfully Tested** = (a ÷ b) X 100

- a = Total number of successful xDSL cooperative tests for xDSL lines where cooperative testing was requested in the reporting period
- b = Total Number of xDSL line tests requested by the CLEC and scheduled in the reporting period

## Report Structure

- CLEC Specific
- CLEC Aggregate
- Type of Loop tested

## Data Retained

| Relating to CLEC Experience | Relating to BellSouth Performance |
|---|---|
| • Report Month<br>• CLEC Company Name (OCN)<br>• CLEC Order Number (so_nbr) and PON (PON)<br>• Committed Due Date (DD)<br>• Service Type (CLASS_SVC_DESC)<br>• Acceptance Testing Completed (ACCEPT_TESTING)<br>• Acceptance Testing Declined (ACCEPT_TESTING)<br>• Total xDSL Orders<br>• Missed Appointments Code (SO_MISSED_CMMT_CD)<br>**Note**: Code in parentheses is the corresponding header found in the raw data file. | • No BellSouth Analog Exists |

## SQM Disaggregation - Analog/Benchmark

| SQM Level of Disaggregation | SQM Analog/Benchmark |
|---|---|
| • UNE xDSL<br>- ADSL<br>- HDSL<br>- UCL<br>- OTHER | • 95% of Lines Successfully Tested |

## SEEM Measure

| SEEM Measure | | |
|---|---|---|
| Yes | Tier I | X |
| | Tier II | X |

## SEEM Disaggregation - Analog/Benchmark

| SEEM Disaggregation | SEEM Analog/Benchmark |
|---|---|
| • UNE xDSL<br>- ADSL<br>- HDSL<br>- UCL<br>- Other | • 95% of Lines Successfully Tested |

# P-9: % Provisioning Troubles within 30 days of Service Order Completion



## Definition

Percent Provisioning Troubles within 30 days of Service Order Completion measures the quality and accuracy of Service order activities.

## Exclusions

- Canceled Service Orders
- Order Activities of BellSouth or the CLEC associated with internal or administrative use of local services (Record Orders, Listing Orders, Test Orders, etc.) Test order types may be C, N, R, or T.
- D & F orders
- Trouble reports caused and closed out to Customer Provided Equipment (CPE)

## Business Rules

Measures the quality and accuracy of completed orders. The first trouble report from a service order after completion is counted in this measure. Subsequent trouble reports are measured in Repeat Report Rate. Reports are calculated searching in the prior report period for completed service orders and following 30 days after completion of the service order for a trouble report issue date.

D & F orders are excluded as there is no subsequent activity following a disconnect.

**Note**: Standalone LNP historical data is not available in the maintenance systems (LMOS or WFA).

## Calculation

**% Provisioning Troubles within 30 days of Service Order Activity** = (a ÷ b) X 100

- a = Trouble reports on all completed orders 30 days following service order(s) completion
- b = All Service Orders completed in the previous report calendar month

## Report Structure

- CLEC Specific
- CLEC Aggregate
- BellSouth Aggregate
- Reported in categories of <10 line/circuits; ≥ 10 line/circuits (except trunks)
- Dispatch /Non-Dispatch (except trunks)

## Data Retained

| Relating to CLEC Experience | Relating to BellSouth Performance |
|---|---|
| • Report Month<br>• CLEC Order Number and PON<br>• Order Submission Date (TICKET_ID)<br>• Order Submission Time (TICKET_ID)<br>• Status Type<br>• Status Notice Date<br>• Standard Order Activity<br>• Geographic Scope<br>**Note:** Code in parentheses is the corresponding header found in the raw data file. | • Report Month<br>• BellSouth Order Number<br>• Order Submission Date<br>• Order Submission Time<br>• Status Type<br>• Status Notice Date<br>• Standard Order Activity<br>• Geographic Scope |

## SQM Disaggregation - Analog/Benchmark

| SQM LEVEL of Disaggregation | SQM Analog/Benchmark |
|---|---|
| • Resale Residence | • Retail Residence |

| SQM LEVEL of Disaggregation | SQM Analog/Benchmark |
|---|---|
| • Resale Business | • Retail business |
| • Resale Design | • Retail Design |
| • Resale PBX | • Retail PBX |
| • Resale Centrex | • Retail Centrex |
| • Resale ISDN | • Retail ISDN |
| • LNP (Standalone) | • Retail Residence and Business (POTS) |
| • INP (Standalone) | • Retail Residence and Business (POTS) |
| • 2W Analog Loop Design | • Retail Residence and Business Dispatch |
| • 2W Analog Loop Non-Design | • Retail Residence and Business - (POTS Excluding Switch-Based Orders) |
| • 2W Analog Loop With LNP Design | • Retail Residence and Business Dispatch |
| • 2W Analog Loop With LNP Non-Design | • Retail Residence and Business - (POTS Excluding Switch-Based Orders) |
| • 2W Analog Loop With INP Design | • Retail Residence and Business Dispatch |
| • 2W Analog Loop With INP Non-Design | • Retail Residence and Business (POTS - Excluding Switch-Based Orders) |
| • UNE Digital Loop < DS1 | • Retail Digital Loop < DS1 |
| • UNE Digital Loop ≥ DS1 | • Retail Digital Loop ≥ DS1 |
| • UNE xDSL (HDSL, ADSL and UCL) | • ADSL provided to Retail |
| • UNE ISDN (Includes UDC) | • Retail ISDN BRI |
| • UNE Line Sharing | • ADSL Provided to Retail |
| • UNE Loop + Port Combinations<br>- Dispatch In<br>- Switch-Based | • Retail Residence and Business<br>- Dispatch In<br>- Switch-Based |
| • UNE Switch Ports | • Retail Residence and Business (POTS) |
| • UNE Combo Other | • Retail Residence, Business and Design Dispatch (Including Dispatch Out and Dispatch In) |
| • Local Transport (Unbundled Interoffice Transport) | • Retail DS1/DS3 Interoffice |
| • UNE Other Non-Design | • Retail Residence and Business |
| • UNE Other Design | • Retail Design |
| • Local Interconnection Trunks | • Parity with Retail |
| • UNE Line Splitting | • ADSL to Retail |
| • EELs | • Retail DS1/DS3 |

## SEEM Measure

| SEEM Measure | | |
|---|---|---|
| Yes | Tier I | X |
| | Tier II | X |

## SEEM Disaggregation - Analog/Benchmark

| SEEM Disaggregation | SEEM Analog/Benchmark |
|---|---|
| • Resale Residence | • Retail Residence |
| • Resale Business | • Retail business |
| • Resale Design | • Retail Design |
| • Resale PBX | • Retail PBX |
| • Resale Centrex | • Retail Centrex |
| • Resale ISDN | • Retail ISDN |
| • LNP (Standalone) | • Retail Residence and Business (POTS) |
| • INP (Standalone) | • Retail Residence and Business (POTS) |
| • 2W Analog Loop Design | • Retail Residence and Business Dispatch |
| • 2W Analog Loop Non-Design | • Retail Residence and Business - (POTS Excluding Switch-Based Orders) |
| • 2W Analog Loop With LNP Design | • Retail Residence and Business Dispatch |
| • 2W Analog Loop With LNP Non-Design | • Retail Residence and Business - (POTS Excluding Switch-Based Orders) |
| • 2W Analog Loop With INP Design | • Retail Residence and Business Dispatch |
| • 2W Analog Loop With INP Non-Design | • Retail Residence and Business (POTS - Excluding Switch-Based Orders) |
| • UNE Digital Loop < DS1 | • Retail Digital Loop < DS1 |
| • UNE Digital Loop ≥ DS1 | • Retail Digital Loop ≥ DS1 |
| • UNE Loop + Port Combinations<br>- Dispatch In<br>- Switch-Based | • Retail Residence and Business<br>- Dispatch In<br>- Switch-Based |
| • UNE Switch Ports | • Retail Residence and Business (POTS) |
| • UNE Combo Other | • Retail Residence, Business and Design Dispatch (Including Dispatch Out and Dispatch In) |
| • UNE xDSL (HDSL, ADSL and UCL) | • ADSL provided to Retail |
| • UNE ISDN (Includes UDC) | • Retail ISDN BRI |
| • UNE Line Sharing | • ADSL Provided to Retail |
| • Local Transport (Unbundled Interoffice Transport) | • Retail DS1/DS3 Interoffice |
| • Local Interconnection Trunks | • Parity with Retail |
| • UNE Line Splitting | • ADSL Provided to Retail |
| • UNE Other Non-Design | • Retail Residence and Business |
| • UNE Other Design | • Retail Design |
| • EELs | • Retail DS1/DS3 |

# P-10: Total Service Order Cycle Time (TSOCT)

## Definition

This report measures the total service order cycle time from receipt of a valid service order request to the return of a completion notice to the CLEC Interface.

## Exclusions

- Canceled Service Orders
- Order Activities of BellSouth or the CLEC associated with internal or administrative use of local services (Record Orders, Listing Orders, Test Orders, etc.) Test order types may be C, N, R, or T.
- D (Disconnect - Except "D" orders associated with LNP Standalone.) and F (From) orders. (From is disconnect side of a move order when the customer moves to a new address).
- "L" Appointment coded orders (where the customer has requested a later than offered interval)
- Orders with CLEC/Subscriber caused delays or CLEC/Subscriber requested due date changes.

## Business Rules

The interval is determined for each order processed during the reporting period. This measurement combines three reports: FOC Timeliness, Average Order Completion Interval and Average Completion Notice Interval.

This interval starts with the receipt of a valid service order request and stops when a completion notice is sent to the CLEC Interface (LENS, TAG OR EDI). Elapsed time for each order is accumulated for each reporting dimension. The accumulated time for each reporting dimension is then divided by the associated total number of orders completed. Orders that are worked on zero due dates are calculated with a .33 day interval (8 hours) in order to report a portion of a day interval. These orders are issued and worked/completed on same day. They can be either flow through orders (no field work-non-dispatched) or field orders (dispatched).

Reporting is by Fully Mechanized, Partially Mechanized and Non-Mechanized receipt of LSRs.

## Calculation

Total Service Order Cycle Time = (a - b)

- a = Service Order Completion Notice Date
- b = Service Request Receipt Date

Average Total Service Order Cycle Time = (c ÷ d)

- c = Sum of all Total Service Order Cycle Times
- d = Total Number Service Orders Completed in Reporting Period

**Total Service Order Cycle Time Interval Distribution** (for each interval) = (e ÷ f) X 100

- e = Total Number of Service Requests Completed in "X" minutes/hours
- f = Total Number of Service Requests Received in Reporting Period

## Report Structure

- CLEC Specific
- CLEC Aggregate
- BellSouth Aggregate
- Fully Mechanized; Partially Mechanized; Non-Mechanized
- Report in categories of <10 line/circuits; ≥ 10 line/circuits (except trunks)
- Dispatch /Non-Dispatch categories applicable to all levels except trunks
- Intervals 0-5, 5-10, 10-15, 15-20, 20-25, 25-30, ≥ 30 Days. The interval breakout is: 0-5 = 0-<5, 5-10 = 5-<10, 10-15 = 10-<15, 15-20 = 15-<20, 20-25 = 20-<25, 25-30 = 25-<30, ≥ 30 = 30 and greater.

## Data Retained

| Relating to CLEC Experience | Relating to BellSouth Performance |
|---|---|
| • Report Month<br>• Interval for FOC<br>• CLEC Company Name (OCN)<br>• Order Number (PON)<br>• Submission Date & Time (TICKET_ID)<br>• Completion Date (CMPLTN_DT)<br>• Service Type (CLASS_SVC_DESC)<br>• Geographic Scope<br>**Note:** Code in parentheses is the corresponding header found in the raw data file | • Report Month<br>• BellSouth Order Number<br>• Order Submission Date & Time<br>• Order Completion Date & Time<br>• Service Type<br>• Geographic Scope |

## SQM Disaggregation - Analog/Benchmark

| SQM Level of Disaggregation | SQM Analog/Benchmark |
|---|---|
| • Resale Residence<br>• Resale Business<br>• Resale Design<br>• Resale PBX<br>• Resale Centrex<br>• Resale ISDN<br>• LNP (Standalone)<br>• INP (Standalone)<br>• 2W Analog Loop Design<br>• 2W Analog Loop Non-Design<br>• 2W Analog Loop With LNP Design<br>• 2W Analog Loop With LNP Non-Design<br>• 2W Analog Loop With INP Design<br>• 2W Analog Loop With INP Non-Design<br>• UNE Switch Ports<br>• UNE Loop + Port Combinations<br>- Dispatch In<br>- Switch Based<br>• UNE Combo Other<br>• UNE xDSL (HDSL, ADSL and UCL)<br>• UNE ISDN (Includes UDC)<br>• UNE Line Sharing<br>• UNE Other Design<br>• UNE Other Non -Design<br>• UNE Digital Loops < DS1<br>• UNE Digital Loops ≥ DS1<br>• Local Transport (Unbundled Interoffice Transport)<br>• Local Interconnection Trunks<br>• UNE Line Splitting<br>• EELs | • Diagnostic |

## SEEM Measure

| SEEM Measure | | |
|---|---|---|
| No | Tier I | |
| | Tier II | |

## SEEM Disaggregation - Analog/Benchmark

| SEEM Disaggregation | SEEM Analog/Benchmark |
|---|---|
| • Not Applicable | • Not Applicable |

# P-11: Service Order Accuracy

## Definition

The "service order accuracy" measurement measures the accuracy and completeness of BellSouth service orders by comparing what was ordered and what was completed.

## Exclusions

- Cancelled Service Orders
- Order Activities of BellSouth or the CLEC associated with internal or administrative use of local services (Record Orders, Listing Orders, Test Orders, etc.)
- D & F orders

## Business Rules

A statistically valid sample of service orders, completed during a monthly reporting period, is compared to the original account profile and the order that the CLEC sent to BellSouth. An order is "completed without error" if all service attributes and account detail changes (as determined by comparing the original order) completely and accurately reflect the activity specified on the original order and any supplemental CLEC order. For both small and large sample sizes, when a Service Request cannot be matched with a corresponding Service Order, it will not be counted. For small sample sizes an effort will be made to replace the service request.

**Service Order Accuracy Sampling Process:** A list of all orders completed in the report month is generated. The orders are then listed by the disaggregations specified in the SQM. For each disaggregation, the quantity of completed orders and the error rate for each disaggregation from the previous month are entered into a "Stratified Random Sampling for Proportions" formula. This formula determines the number of orders that are to be reviewed for each disaggregation. Once the sample size for each disaggregation is determined, the specified quantity of orders for each disaggregation are pulled for review.

## Calculation

**Percent Service Order Accuracy** = (a ÷ b) X 100

- a = Orders Completed without Error
- b = Orders Completed in Reporting Period

## Report Structure

- CLEC Aggregate
- Reported in categories of <10 line/circuits; > = 10 line/circuits
- Dispatch/Non-Dispatch

## Data Retained

| Relating to CLEC Experience | Relating to BellSouth Experience |
|---|---|
| • Report Month<br>• CLEC Order Number and PON<br>• Local Service Request (LSR)<br>• Order Submission Date<br>• Committed Due Date<br>• Service Type<br>• Standard Order Activity | • No BellSouth Analog Exist |

## SQM Disaggregation - Analog/Benchmark

| SQM LEVEL of Disaggregation | SQM Analog/Benchmark: |
|---|---|
| • Resale Residence<br>• Resale Business<br>• Resale Design (Specials)<br>• UNE Specials (Design)<br>• UNE (Non-Design)<br>• Local Interconnection Trunks | • 95% Accurate |

## SEEM Measure

| SEEM Measure | | |
|---|---|---|
| Yes | Tier I | |
| | Tier II | X |

## SEEM Disaggregation - Analog/Benchmark

| SEEM Disaggregation | SEEM Analog/Benchmark |
|---|---|
| • Resale | • 95% |
| • UNE | • 95% |
| • UNE-P | • 95% |

# P-12: LNP-Average Disconnect Timeliness Interval & Disconnect Timeliness Interval Distribution

## Definition

Disconnect Timeliness is defined as the interval between the time ESI Number Manager receives the valid 'Number Ported' message from NPAC (signifying the CLEC 'Activate') until the time the Disconnect is completed in the Central Office switch. This interval effectively measures BellSouth responsiveness by isolating it from impacts that are caused by CLEC related activities.

## Exclusions

- Canceled Service Orders
- Order Activities of BellSouth or the CLEC associated with internal or administrative use of local services (Record Orders, Listing Orders, Test Orders, etc.) where identifiable.

## Business Rules

The Disconnect Timeliness interval is determined for each number ported associated with a disconnect service order processed on an LSR during the reporting period. The Disconnect Timeliness interval is the elapsed time from when BellSouth receives a valid 'Number Ported' message in ESI Number Manager (signifying the CLEC 'Activate') for each telephone number ported until each number on the service order is disconnected in the Central Office switch. Elapsed time for each ported number is accumulated for each reporting dimension. The accumulated time for each reporting dimension is then divided by the total number of selected telephone numbers disconnected in the reporting period.

## Calculation

**Disconnect Timeliness Interval** = (a - b)

- a = Completion Date and Time in Central Office switch for each number on disconnect order
- b = Valid 'Number Ported' message received date & time

**Average Disconnect Timeliness Interval** = (c ÷ d)

- c = Sum of all Disconnect Timeliness Intervals
- d = Total Number of disconnected numbers completed in reporting period

**Disconnect Timeliness Interval Distribution** (for each interval) = (e ÷ f) X 100

- e = Disconnected numbers completed in "X" days
- f = Total disconnect numbers completed in reporting period

## Report Structure

- CLEC Specific
- CLEC Aggregate
- Geographic Scope
  - State, Region

## Data Retained

| Relating to CLEC Experience | Relating to BellSouth Performance |
|---|---|
| • Order Number<br>• Telephone Number / Circuit Number<br>• Committed Due Date<br>• Receipt Date / Time (ESI Number Manager)<br>• Date/Time of Recent Change Notice | • Not Applicable |

## SQM Disaggregation - Analog/Benchmark

| SQM Level of Disaggregation: | SQM Analog/Benchmark |
|---|---|
| • LNP | • 95% ≤ 15 Minutes |

## SEEM Measure

| SEEM Measure | | |
|---|---|---|
| No | Tier I | |
| | Tier II | |

## SEEM Disaggregation - Analog/Benchmark

| SEEM Disaggregation | SEEM Analog/Benchmark |
|---|---|
| • Not Applicable | • Not Applicable |

# Section 4: Maintenance & Repair

## M&R-1: Missed Repair Appointments

### Definition

The percent of trouble reports not cleared by the committed date and time.

### Exclusions

- Trouble tickets canceled at the CLEC request.
- BellSouth trouble reports associated with internal or administrative service.
- Customer Provided Equipment (CPE) troubles or CLEC Equipment Trouble.

### Business Rules

The negotiated commitment date and time is established when the repair report is received. The cleared time is the date and time that BellSouth personnel clear the trouble and closes the trouble report in his/her Computer Access Terminal (CAT) or workstation. If this is after the Commitment time, the report is flagged as a "Missed Commitment" or a missed repair appointment. When the data for this measure is collected for BellSouth and a CLEC, it can be used to compare the percentage of the time repair appointments are missed due to BellSouth reasons. (No access reports are not part of this measure because they are not a missed appointment.)

**Note**: Appointment intervals vary with force availability in the POTS environment. Specials and Trunk intervals are standard interval appointments of no greater than 24 hours. Standalone LNP historical data is not available in the maintenance systems (LMOS or WFA).

### Calculation

**Percentage of Missed Repair Appointments** = (a ÷ b) X 100

- a = Count of Customer Troubles Not Cleared by the Quoted Commitment Date and Time
- b = Total Trouble reports closed in Reporting Period

### Report Structure

- Dispatch/Non-Dispatch
- CLEC Specific
- CLEC Aggregate
- BellSouth Aggregate

### Data Retained

| Relating to CLEC Experience | Relating to BellSouth Performance |
|---|---|
| • Report Month<br>• CLEC Company Name<br>• Submission Date & Time (TICKET_ID)<br>• Completion Date (CMPLTN_DT)<br>• Service Type (CLASS_SVC_DESC)<br>• Disposition and Cause (CAUSE_CD & CAUSE_DESC)<br>• Geographic Scope<br>**Note**: Code in parentheses is the corresponding header found in the raw data file. | • Report Month<br>• BellSouth Company Code<br>• Submission Date & Time<br>• Completion Date<br>• Service Type<br>• Disposition and Cause (Non-Design /Non-Special Only)<br>• Trouble Code (Design and Trunking Services)<br>• Geographic Scope |

## SQM Disaggregation - Analog/Benchmark

| SQM Level of Disaggregation | SQM Analog/Benchmark |
|---|---|
| • Resale Residence | • Retail Residence |
| • Resale Business | • Retail Business |
| • Resale Design | • Retail Design |
| • Resale PBX | • Retail PBX |
| • Resale Centrex | • Retail Centrex |
| • Resale ISDN | • Retail ISDN |
| • 2W Analog Loop Design | • Retail Residence & Business Dispatch |
| • 2W Analog Loop Non – Design | • Retail Residence & Business (POTS) (Exclusion of switch-based feature troubles |
| • UNE Digital Loop < DS1 | • Retail Digital Loop < DS1 |
| • UNE Digital Loop ≥ DS1 | • Retail Digital Loop ≥ DS1 |
| • UNE Loop + Port Combinations | • Retail Residence & Business |
| • UNE Switch ports | • Retail Residence & Business (POTS) |
| • UNE Combo Other | • Retail Residence, Business & Design Dispatch |
| • UNE xDSL (HDSL, ADSL and UCL) | • ADSL provided to Retail |
| • UNE ISDN | • Retail ISDN – BRI |
| • UNE Line Sharing | • ADSL provided to Retail |
| • UNE Other Design | • Retail Design |
| • UNE Other Non-Design | • Retail Residence and Business |
| • Local Interconnection Trunks | • Parity with Retail |
| • Local Transport (Unbundled Interoffice Transport) | • Retail DS1/DS3 Interoffice |

## SEEM Measure

| SEEM Measure | | |
|---|---|---|
| Yes | Tier I | X |
| | Tier II | X |

## SEEM Disaggregation - Analog/Benchmark

| SEEM Disaggregation | SEEM Analog/Benchmark |
|---|---|
| • Resale Residence | • Retail Residence |
| • Resale Business | • Retail Business |
| • Resale Design | • Retail Design |
| • Resale PBX | • Retail PBX |
| • Resale Centrex | • Retail Centrex |
| • Resale ISDN | • Retail ISDN |
| • 2W Analog Loop Design | • Retail Residence & Business Dispatch |
| • 2W Analog Loop Non – Design | • Retail Residence & Business (POTS) (Exclusion of switch-based feature troubles |
| • UNE Digital Loop < DS1 | • Retail Digital Loop < DS1 |

| SEEM Disaggregation | SEEM Analog/Benchmark |
|---|---|
| • UNE Digital Loop ≥ DS1 | • Retail Digital Loop ≥ DS1 |
| • UNE Loop + Port Combinations | • Retail Residence & Business |
| • UNE Switch ports | • Retail Residence & Business (POTS) |
| • UNE Combo Other | • Retail Residence, Business & Design Dispatch |
| • UNE xDSL (HDSL, ADSL and UCL) | • ADSL provided to Retail |
| • UNE ISDN | • Retail ISDN – BRI |
| • UNE Line Sharing | • ADSL provided to Retail |
| • UNE Other Design | • Retail Design |
| • UNE Other Non-Design | • Retail Residence and Business |
| • Local Transport (Unbundled Interoffice Transport) | • Retail DS1/DS3 Interoffice |
| • Local Interconnection Trunks | • Parity with Retail |

# M&R-2: Customer Trouble Report Rate

## Definition

Initial and repeated customer direct or referred troubles reported within a calendar month per 100 lines/circuits in service.

## Exclusions

- Trouble tickets canceled at the CLEC request.
- BellSouth trouble reports associated with internal or administrative service.
- Customer Provided Equipment (CPE) troubles or CLEC Equipment Trouble.

## Business Rules

Customer Trouble Report Rate is computed by accumulating the number of maintenance initial and repeated trouble reports during the reporting period. The resulting number of trouble reports are divided by the total "number of service" lines, ports or combination that exist for the CLECs and BellSouth respectively at the end of the report month.

## Calculation

**Customer Trouble Report Rate** = (a ÷ b) X 100

- a = Count of Initial and Repeated Trouble Reports closed in the Current Period
- b = Number of Service Access Lines in service at End of the Report Period

## Report Structure

- CLEC Specific
- CLEC Aggregate
- BellSouth Aggregate

## Data Retained

| Relating to CLEC Experience | Relating to BellSouth Performance |
|---|---|
| • Report Month<br>• CLEC Company Name<br>• Ticket Submission Date & Time (TICKET_ID)<br>• Ticket Completion Date (CMPLTN_DT)<br>• Service Type (CLASS_SVC_DESC)<br>• Disposition and Cause (CAUSE_CD & CAUSE_DESC)<br>• # Service Access Lines in Service at the end of period<br>• Geographic Scope<br>**Note**: Code in parentheses is the corresponding header found in the raw data file. | • Report Month<br>• BellSouth Company Code<br>• Ticket Submission Date & Time<br>• Ticket Completion Date<br>• Service Type<br>• Disposition and Cause (Non-Design /Non-Special Only)<br>• Trouble Code (Design and Trunking Services)<br>• # Service Access Lines in Service at the end of period<br>• Geographic Scope |

## SQM Disaggregation - Analog/Benchmark

| SQM Level of Disaggregation | SQM Analog/Benchmark |
|---|---|
| • Resale Residence | • Retail Residence |
| • Resale Business | • Retail Business |
| • Resale Design | • Retail Design |
| • Resale PBX | • Retail PBX |
| • Resale Centrex | • Retail Centrex |
| • Resale ISDN | • Retail ISDN |
| • 2W Analog Loop Design | • Retail Residence & Business Dispatch |

| SQM Level of Disaggregation | SQM Analog/Benchmark |
|---|---|
| • 2W Analog Loop Non – Design | • Retail Residence & Business (POTS) (Exclusion of switch-based feature troubles) |
| • UNE Digital Loop < DS1 | • Retail Digital Loop < DS1 |
| • UNE Digital Loop ≥ DS1 | • Retail Digital Loop ≥ DS1 |
| • UNE Loop + Port Combinations | • Retail Residence & Business |
| • UNE Switch Ports | • Retail Residence & Business (POTS) |
| • UNE Combo Other | • Retail Residence, Business & Design Dispatch |
| • UNE xDSL (HDSL, ADSL and UCL) | • ADSL provided to Retail |
| • UNE ISDN | • Retail ISDN – BRI |
| • UNE Line Sharing | • ADSL provided to Retail |
| • UNE Other Design | • Retail Design |
| • UNE Other Non-Design | • Retail Residence and Business |
| • Local Interconnection Trunks | • Parity with Retail |
| • Local Transport (Unbundled Interoffice Transport) | • Retail DS1/DS3 Interoffice |

## SEEM Measure

| SEEM Measure | | |
|---|---|---|
| Yes | Tier I | X |
| | Tier II | X |

## SEEM Disaggregation - Analog/Benchmark

| SEEM Disaggregation | SEEM Analog/Benchmark |
|---|---|
| • Resale Residence | • Retail Residence |
| • Resale Business | • Retail Business |
| • Resale Design | • Retail Design |
| • Resale PBX | • Retail PBX |
| • Resale Centrex | • Retail Centrex |
| • Resale ISDN | • Retail ISDN |
| • 2W Analog Loop Design | • Retail Residence & Business Dispatch |
| • 2W Analog Loop Non – Design | • Retail Residence & Business (POTS) (Exclusion of switch-based feature troubles) |
| • UNE Digital Loop < DS1 | • Retail Digital Loop < DS1 |
| • UNE Digital Loop ≥ DS1 | • Retail Digital Loop ≥ DS1 |
| • UNE Loop + Port Combinations | • Retail Residence & Business |
| • UNE Switch ports | • Retail Residence & Business (POTS) |
| • UNE Combo Other | • Retail Residence, Business & Design Dispatch |
| • UNE xDSL (HDSL, ADSL and UCL) | • ADSL provided to Retail |
| • UNE ISDN | • Retail ISDN – BRI |
| • UNE Line Sharing | • ADSL provided to Retail |
| • UNE Other Design | • Retail Design |

| SEEM Disaggregation | SEEM Analog/Benchmark |
|---|---|
| • UNE Other Non-Design | • Retail Residence and Business |
| • Local Transport (Unbundled Interoffice Transport) | • Retail DS1/DS3 Interoffice |
| • Local Interconnection Trunks | • Parity with Retail |

# M&R-3: Maintenance Average Duration

## Definition

The Average duration of Customer Trouble Reports from the receipt of the Customer Trouble Report to the time the trouble report is cleared.

## Exclusions

- Trouble tickets canceled at the CLEC request.
- BellSouth trouble reports associated with internal or administrative service.
- Customer Provided Equipment (CPE) troubles or CLEC Equipment Trouble.

## Business Rules

For Average Duration the clock starts on the date and time of the receipt of the correct report information, i.e. correct telephone number, correct circuit identification, trouble description, etc. for the repair request. The clock stops on the date and time the service is restored and the BellSouth or CLEC customer is notified (when the technician completes the trouble ticket on his/her CAT or work systems).

## Calculation

**Maintenance Duration** = (a - b)

- a = Date and Time of Service Restoration
- b = Date and Time Trouble Ticket was Opened

**Average Maintenance Duration** = (c ÷ d)

- c = Total of all maintenance durations in the reporting period
- d = Total Closed Troubles in the reporting period

## Report Structure

- Dispatch/Non-Dispatch
- CLEC Specific
- CLEC Aggregate
- BellSouth Aggregate

## Data Retained

| Relating to CLEC Experience: | Relating to BellSouth Performance: |
|---|---|
| • Report month<br>• Total Tickets (LINE_NBR)<br>• CLEC Company Name<br>• Ticket Submission Date & Time (TICKET_ID)<br>• Ticket Completion Date (CMPLTN_DT)<br>• Service Type (CLASS_SVC_DESC)<br>• Disposition and Cause (CAUSE_CD & CAUSE_DESC)<br>• Geographic Scope<br>**Note**: Code in parentheses is the corresponding header found in the raw data file. | • Report month<br>• Total Tickets<br>• BellSouth Company Code<br>• Ticket Submission Date<br>• Ticket Submission Time<br>• Ticket Completion Date<br>• Ticket Completion Time<br>• Total Duration Time<br>• Service Type<br>• Disposition and Cause (Non-Design /Non-Special Only)<br>• Trouble Code (Design and Trunking Services)<br>• Geographic Scope |

## SQM Disaggregation - Analog/Benchmark

| SQM Level of Disaggregation | SQM Analog/Benchmark |
|---|---|
| • Resale Residence | • Retail Residence |
| • Resale Business | • Retail business |

| SQM Level of Disaggregation | SQM Analog/Benchmark |
|---|---|
| • Resale Design | • Retail Design |
| • Resale PBX | • Retail PBX |
| • Resale Centrex | • Retail Centrex |
| • Resale ISDN | • Retail ISDN |
| • 2W Analog Loop Design | • Retail Residence & Business Dispatch |
| • 2W Analog Loop Non – Design | • Retail Residence & Business (POTS) (Exclusion of switch-based feature troubles) |
| • UNE Digital Loop < DS1 | • Retail Digital Loop < DS1 |
| • UNE Digital Loop ≥ DS1 | • Retail Digital Loop ≥ DS1 |
| • UNE Loop + Port Combinations | • Retail Residence & Business |
| • UNE Switch ports | • Retail Residence & Business (POTS) |
| • UNE Combo Other | • Retail Residence, Business & Design Dispatch |
| • UNE xDSL (HDSL, ADSL and UCL) | • ADSL provided to Retail |
| • UNE ISDN | • Retail ISDN – BRI |
| • UNE Line Sharing | • ADSL provided to Retail |
| • UNE Other Design | • Retail Design |
| • UNE Other Non-Design | • Retail Residence and Business |
| • Local Transport (Unbundled Interoffice Transport) | • Retail DS1/DS3 Interoffice |
| • Local Interconnection Trunks | • Parity with Retail |

## SEEM Measure

| SEEM Measure | | |
|---|---|---|
| Yes | Tier I | X |
| | Tier II | X |

## SEEM Disaggregation - Analog/Benchmark

| SEEM Disaggregation | SEEM Analog/Benchmark |
|---|---|
| • Resale Residence | • Retail Residence |
| • Resale Business | • Retail Business |
| • Resale Design | • Retail Design |
| • Resale PBX | • Retail PBX |
| • Resale Centrex | • Retail Centrex |
| • Resale ISDN | • Retail ISDN |
| • 2W Analog Loop Design | • Retail Residence & Business Dispatch |
| • 2W Analog Loop Non – Design | • Retail Residence & Business (POTS) (Exclusion of switch-based feature troubles) |
| • UNE Digital Loop < DS1 | • Retail Digital Loop < DS1 |
| • UNE Digital Loop ≥ DS1 | • Retail Digital Loop ≥ DS1 |
| • UNE Loop + Port Combinations | • Retail Residence & Business |
| • UNE Switch ports | • Retail Residence & Business (POTS) |

| SEEM Disaggregation | SEEM Analog/Benchmark |
|---|---|
| • UNE Combo Other | • Retail Residence, Business & Design Dispatch |
| • UNE xDSL (HDSL, ADSL and UCL) | • ADSL provided to Retail |
| • UNE ISDN | • Retail ISDN – BRI |
| • UNE Line Sharing | • ADSL provided to Retail |
| • UNE Other Design | • Retail Design |
| • UNE Other Non-Design | • Retail Residence and Business |
| • Local Transport (Unbundled Interoffice Transport) | • Retail DS1/DS3 Interoffice |
| • Local Interconnection Trunks | • Parity with Retail |

# M&R-4: Percent Repeat Troubles within 30 Days

## Definition

Closed trouble reports on the same line/circuit as a previous trouble report received within 30 calendar days as a percent of total troubles closed reported

## Exclusions

- Trouble tickets canceled at the CLEC request.
- BellSouth trouble reports associated with internal or administrative service.
- Customer Provided Equipment (CPE) troubles or CLEC Equipment Trouble.

## Business Rules

Includes Customer trouble reports received within 30 days of an original Customer trouble report

## Calculation

**Percent Repeat Troubles within 30 Days** = (a ÷ b) X 100

- a = Count of closed Customer Troubles where more than one trouble report was logged for the same service line within a continuous 30 days
- b = Total Trouble Reports Closed in Reporting Period

## Report Structure

- Dispatch/Non-Dispatch
- CLEC Specific
- CLEC Aggregate
- BellSouth Aggregate

## Data Retained

| Relating to CLEC Experience | Relating to BellSouth Performance |
|---|---|
| • Report month<br>• Total Tickets (LINE_NBR)<br>• CLEC Company Name<br>• Ticket Submission Date & Time (TICKET_ID)<br>• Ticket Completion Date (CMPLTN_DT)<br>• Total and Percent Repeat Trouble Reports within 30 Days (TOT_REPEAT)<br>• Service Type<br>• Disposition and Cause (CAUSE_CD & CAUSE_DESC)<br>• Geographic Scope<br>**Note**: Code in parentheses is the corresponding header found in the raw data file. | • Report month<br>• Total Tickets<br>• BellSouth Company Code<br>• Ticket Submission Date<br>• Ticket Submission Time<br>• Ticket Completion Date<br>• Ticket Completion Time<br>• Total and Percent Repeat Trouble Reports within 30 Days<br>• Service Type<br>• Disposition and Cause (Non-Design /Non-Special Only)<br>• Trouble Code (Design and Trunking Services)<br>• Geographic Scope |

## SQM Disaggregation - Analog/Benchmark

| SQM Level of Disaggregation | SQM Analog/Benchmark |
|---|---|
| • Resale Residence | • Retail Residence |
| • Resale Business | • Retail business |
| • Resale Design | • Retail Design |
| • Resale PBX | • Retail PBX |
| • Resale Centrex | • Retail Centrex |

| SQM Level of Disaggregation | SQM Analog/Benchmark |
|---|---|
| • Resale ISDN | • Retail ISDN |
| • 2W Analog Loop Design | • Retail Residence & Business Dispatch |
| • 2W Analog Loop Non – Design | • Retail Residence & Business (POTS) (Exclusion of switch-based feature troubles) |
| • UNE Digital Loop < DS1 | • Retail Digital Loop < DS1 |
| • UNE Digital Loop ≥ DS1 | • Retail Digital Loop ≥ DS1 |
| • UNE Loop + Port Combinations | • Retail Residence & Business |
| • UNE Switch ports | • Retail Residence & Business (POTS) |
| • UNE Combo Other | • Retail Residence, Business & Design Dispatch |
| • UNE xDSL (HDSL, ADSL and UCL) | • ADSL provided to Retail |
| • UNE ISDN | • Retail ISDN – BRI |
| • UNE Line Sharing | • ADSL provided to Retail |
| • UNE Other Design | • Retail Design |
| • UNE Other Non-Design | • Retail Residence and Business |
| • Local Transport (Unbundled Interoffice Transport) | • Retail DS1/DS3 Interoffice |
| • Local Interconnection Trunks | • Parity with Retail |

## SEEM Measure

| SEEM Measure | | |
|---|---|---|
| Yes | Tier I | X |
| | Tier II | X |

## SEEM Disaggregation - Analog/Benchmark

| SEEM Disaggregation | SEEM Analog/Benchmark |
|---|---|
| • Resale Residence | • Retail Residence |
| • Resale Business | • Retail Business |
| • Resale Design | • Retail Design |
| • Resale PBX | • Retail PBX |
| • Resale Centrex | • Retail Centrex |
| • Resale ISDN | • Retail ISDN |
| • 2W Analog Loop Design | • Retail Residence & Business Dispatch |
| • 2W Analog Loop Non – Design | • Retail Residence & Business (POTS) (Exclusion of switch-based feature troubles) |
| • UNE Digital Loop < DS1 | • Retail Digital Loop < DS1 |
| • UNE Digital Loop ≥ DS1 | • Retail Digital Loop ≥ DS1 |
| • UNE Loop + Port Combinations | • Retail Residence & Business |
| • UNE Switch ports | • Retail Residence & Business (POTS) |
| • UNE Combo Other | • Retail Residence, Business & Design Dispatch |
| • UNE xDSL (HDSL, ADSL and UCL) | • ADSL provided to Retail |
| • UNE ISDN | • Retail ISDN – BRI |

| SEEM Disaggregation | SEEM Analog/Benchmark |
|---|---|
| • UNE Line Sharing | • ADSL provided to Retail |
| • UNE Other Design | • Retail Design |
| • UNE Other Non-Design | • Retail Residence and Business |
| • Local Transport (Unbundled Interoffice Transport) | • Retail DS1/DS3 Interoffice |
| • Local Interconnection Trunks | • Parity with Retail |

# M&R-5: Out of Service (OOS) > 24 Hours

## Definition

For Out of Service Troubles (no dial tone, cannot be called or cannot call out) the percentage of Total OOS Troubles cleared in excess of 24 hours. (All design services are considered to be out of service).

## Exclusions

- Trouble Reports canceled at the CLEC request
- BellSouth Trouble Reports associated with administrative service
- Customer Provided Equipment (CPE) Troubles or CLEC Equipment Troubles.

## Business Rules

Customer Trouble reports that are out of service and cleared in excess of 24 hours. The clock begins when the trouble report is created in LMOS/WFA and the trouble is counted if the elapsed time exceeds 24 hours.

## Calculation

**Out of Service (OOS) > 24 hours** = (a ÷ b) X 100

- a = Total Cleared Troubles OOS > 24 Hours
- b = Total OOS Troubles in Reporting Period

## Report Structure

- Dispatch/Non-Dispatch
- CLEC Specific
- BellSouth Aggregate
- CLEC Aggregate

## Data Retained

| Relating to CLEC Experience | Relating to BellSouth Performance |
|---|---|
| • Report Month<br>• Total Tickets<br>• CLEC Company Name<br>• Ticket Submission Date & Time (TICKET_ID)<br>• Ticket Completion Date (CMPLTN_DT<br>• Percentage of Customer Troubles out of<br>• Service > 24 Hours (OOS>24_FLAG)<br>• Service type (CLASS_SVC_DESC)<br>• Disposition and Cause (CAUSE_CD & CAUSE-DESC)<br>• Geographic Scope<br>**Note:** Code in parentheses is the corresponding header found in the raw data file. | • Report Month<br>• Total Tickets<br>• BellSouth Company Code<br>• Ticket Submission Date<br>• Ticket Submission time<br>• Ticket Completion Date<br>• Ticket Completion Time<br>• Percent of Customer Troubles out of Service > 24 Hours<br>• Service type<br>• Disposition and Cause (Non-Design/Non-Special only)<br>• Trouble Code (Design and Trunking Services)<br>• Geographic Scope |

## SQM Disaggregation - Analog/Benchmark

| SQM Level of Disaggregation | SQM Analog/Benchmark |
|---|---|
| • Resale Residence | • Retail Residence |
| • Resale Business | • Retail Business |
| • Resale Design | • Retail Design |
| • Resale PBX | • Retail PBX |
| • Resale Centrex | • Retail Centrex |

| SQM Level of Disaggregation | SQM Analog/Benchmark |
|---|---|
| • Resale ISDN | • Retail ISDN |
| • 2W Analog Loop Design | • Retail Residence & Business Dispatch |
| • 2W Analog Loop Non – Design | • Retail Residence & Business (POTS) (Exclusion of switch-based feature troubles) |
| • UNE Digital Loop < DS1 | • Retail Digital Loop < DS1 |
| • UNE Digital Loop ≥ DS1 | • Retail Digital Loop ≥ DS1 |
| • UNE Loop + Port Combinations | • Retail Residence & Business |
| • UNE Switch ports | • Retail Residence & Business (POTS) |
| • UNE Combo Other | • Retail Residence, Business & Design Dispatch |
| • UNE xDSL (HDSL, ADSL and UCL) | • ADSL provided to Retail |
| • UNE ISDN | • Retail ISDN – BRI |
| • UNE Line Sharing | • ADSL provided to Retail |
| • UNE Other Design | • Retail Design |
| • UNE Other Non-Design | • Retail Residence and Business |
| • Local Transport (Unbundled Interoffice Transport) | • Retail DS1/DS3 Interoffice |
| • Local Interconnection Trunks | • Parity with Retail |

## SEEM Measure

| SEEM Measure | | |
|---|---|---|
| Yes | Tier I | X |
| | Tier II | X |

## SEEM Disaggregation - Analog/Benchmark

| SEEM Disaggregation | SEEM Analog/Benchmark |
|---|---|
| • Resale Residence | • Retail Residence |
| • Resale Business | • Retail Business |
| • Resale Design | • Retail Design |
| • Resale PBX | • Retail PBX |
| • Resale Centrex | • Retail Centrex |
| • Resale ISDN | • Retail ISDN |
| • 2W Analog Loop Design | • Retail Residence & Business Dispatch |
| • 2W Analog Loop Non – Design | • Retail Residence & Business (POTS) (Exclusion of switch-based feature troubles) |
| • UNE Digital Loop < DS1 | • Retail Digital Loop < DS1 |
| • UNE Digital Loop ≥ DS1 | • Retail Digital Loop ≥ DS1 |
| • UNE Loop + Port Combinations | • Retail Residence & Business |
| • UNE Switch Ports | • Retail Residence & Business (POTS) |
| • UNE Combo Other | • Retail Residence, Business & Design Dispatch |
| • UNE xDSL (HDSL, ADSL and UCL) | • ADSL provided to Retail |
| • UNE ISDN | • Retail ISDN – BRI |

| SEEM Disaggregation | SEEM Analog/Benchmark |
|---|---|
| • UNE Line Sharing | • ADSL provided to Retail |
| • UNE Other Design | • Retail Design |
| • UNE Other Non-Design | • Retail Residence and Business |
| • Local Transport (Unbundled Interoffice Transport) | • Retail DS1/DS3 Interoffice |
| • Local Interconnection Trunks | • Parity with Retail |

# M&R-6: Average Answer Time – Repair Centers

## Definition

This report measures the average time a customer is in queue.

## Exclusions

None

## Business Rules

The clock starts when a CLEC Representative or BellSouth customer makes a choice on the Repair Center's menu and is put in queue for the next repair attendant. The clock stops when the repair attendant answers the call (abandoned calls are not included).

**Note**: The Total Column is a combined BellSouth Residence and Business number.

## Calculation

**Answer Time for BellSouth Repair Centers** = (a - b)

- a = Time BellSouth Repair Attendant Answers Call
- b = Time of entry into queue after ACD Selection

**Average Answer Time for BellSouth Repair Centers** = (c ÷ d)

- c = Sum of all Answer Times
- d = Total number of calls by reporting period

## Report Structure

- CLEC Aggregate
- BellSouth Aggregate

## Data Retained

| Relating to CLEC Experience | Relating to BellSouth Performance |
|---|---|
| • CLEC Average Answer Time | • BellSouth Average Answer Time |

## SQM Disaggregation - Analog / Benchmark

| SQM Level of Disaggregation | Retail Analog / Benchmark |
|---|---|
| • Region. CLEC/BellSouth Service Centers and BellSouth Repair Centers are regional. | • For CLEC, Average Answer Times in UNE Center and BRMC are comparable to the Average Answer Times in the BellSouth Repair Centers. |

## SEEM Measure

| SEEM Measure | | |
|---|---|---|
| No | Tier I | |
| | Tier II | |

## SEEM Disaggregation - Analog/Benchmark

| SEEM Disaggregation | SEEM Analog/Benchmark |
|---|---|
| • Not Applicable | • Not Applicable |

# M&R-7: Mean Time To Notify CLEC of Network Outages

## Definition

BellSouth will inform the CLEC of any Network outages (key customer accounts)

## Exclusions

None

## Business Rules

The time it takes for BellSouth to notify the CLEC and appropriate BellSouth personnel of a customer impacting network incident in equipment that may be utilized by the CLEC. When BellSouth becomes aware of a network incident, the CLEC and appropriate BellSouth personnel will be notified electronically. The notification time for each outage will be measured in minutes and divided by the number of outages for the reporting period. The CLECs will be notified the same way and at the same time as BellSouth personnel. These are broadcast messages. It is up to those receiving the message to determine if they have customers affected by the incident.

## Calculation

**Time to Notify CLEC** = (a - b)

- a = Date and Time BellSouth Notified CLEC
- b = Date and time BellSouth detected network incident

**Mean Time to Notify CLEC** = (c ÷ d)

- c = Sum of all Times to Notify CLEC
- d = Count of Network Incidents

## Report Structure

- BellSouth Aggregate
- CLEC Aggregate
- CLEC Specific

## Data Retained

| Relating to CLEC Experience | Relating to BellSouth Performance |
|---|---|
| • Report Month<br>• Major Network Events<br>• Date/Time of Incident<br>• Date/Time of Notification | • Report Month<br>• Major Network Events<br>• Date/Time of Incident<br>• Date/Time of Notification |

## SQM Disaggregation - Analog / Benchmark

| SQM Level of Disaggregation | Retail Analog / Benchmark |
|---|---|
| • BellSouth Aggregate<br>• CLEC Aggregate<br>• CLEC Specific | • Parity by Design |

## SEEM Measure

| SEEM Measure | | |
|---|---|---|
| No | Tier I | |
| | Tier II | |

## SEEM Disaggregation - Analog/Benchmark

| SEEM Disaggregation | SEEM Analog/Benchmark |
|---|---|
| • Not Applicable | • Not Applicable |

# Section 5: Billing

## B-1: Invoice Accuracy

### Definition

This measure provides the percentage of accuracy of the billing invoices rendered to CLECs during the current month.

### Exclusions

- Adjustments not related to billing errors (e.g., credits for service outage, special promotion credits, adjustments to satisfy the customer)
- Test Accounts

### Business Rules

The accuracy of billing invoices delivered by BellSouth to the CLEC must enable them to provide a degree of billing accuracy comparative to BellSouth bills rendered to retail customers of BellSouth. CLECs request adjustments on bills determined to be incorrect. The BellSouth Billing verification process includes manually analyzing a sample of local bills from each bill period. The bill verification process draws from a mix of different customer billing options and types of service. An end-to-end auditing process is performed for new products and services. Internal measurements and controls are maintained on all billing processes. The CLEC-specific raw data file (which is available on the PMAP web site) will contain the number of bills and adjustments for the reporting month. The number of bills and bill adjustments will be displayed by OCN and/or ACNA.

### Calculation

**Invoice Accuracy** = [(a - b) ÷ a] X 100

- a = Absolute Value of Total Billed Revenues during current month
- b = Absolute Value of Billing Related Adjustments during current month

**Measure of Adjustments** =[(c-d)/ c] x 100

- c = Number of Bills in current month
- d= Number of Billing-related Adjustments in current month

### Report Structure

- CLEC Specific
- CLEC Aggregate
- BellSouth Aggregate
- Geographic Scope
  - Region
  - State

## Data Retained

| Relating to CLEC Experience | Relating to BellSouth Performance |
|---|---|
| • Report Month<br>• Invoice Type<br>- UNE<br>- Resale<br>- Interconnection<br>• Total Billed Revenue<br>• Billing Related Adjustments<br>• Number of Bills<br>• Number of Adjustments | • Report Month<br>• Retail Type<br>- CRIS<br>- CABS<br>• Total Billed Revenue<br>• Billing Related Adjustments |

## SQM Disaggregation - Analog/Benchmark

| SQM Level of Disaggregation | SQM Analog/Benchmark |
|---|---|
| • Product/Invoice Type<br>- Resale<br>- UNE<br>- Interconnection | • Parity with BellSouth Retail Aggregate |

## SEEM Measure

| SEEM Measure | | |
|---|---|---|
| Yes | Tier I | X |
| | Tier II | X |

## SEEM Disaggregation - Analog/Benchmark

| SEEM Disaggregation | SEEM Analog/Benchmark |
|---|---|
| • Resale<br>• UNE<br>• Interconnection | • Parity with Retail |

# B-2: Mean Time to Deliver Invoices

## Definition

Bill Distribution is calculated as follows: CRIS BILLS-The number of workdays is reported for CRIS bills. This is calculated by counting the Bill Period date as the first work day. Weekends and holidays are excluded when counting workdays. J/N Bills are counted in the CRIS work day category for the purposes of the measurement since their billing account number (Q account) is provided from the CRIS system.

CABS BILLS-The number of calendar days is reported for CABS bills. This is calculated by counting the day following the Bill Period date as the first calendar day. Weekends and holidays are included when counting the calendar days.

## Exclusions

None

## Business Rules

This report measures the mean interval for timeliness of billing records delivered to CLECs in an agreed upon format. CRIS-based invoices are measured in business days, and CABS-based invoices in calendar days.

## Calculation

Invoice Timeliness = (a - b)

- a = Invoice Transmission Date
- b = Close Date of Scheduled Bill Cycle

**Mean Time To Deliver Invoices** = (c ÷ d)

- c = Sum of all Invoice Timeliness intervals
- d = Count of Invoices Transmitted in Reporting Period

## Report Structure

- CLEC Specific
- CLEC Aggregate
- BellSouth Aggregate
- Geographic Scope
  - Region
  - State

## Data Retained

| Relating to CLEC Experience | Relating to BellSouth Performance |
|---|---|
| • Report Month<br>• Invoice Type<br>- UNE<br>- Resale<br>- Interconnection<br>- State<br>• Invoice Transmission Count<br>• Date of Scheduled Bill Close | • Report Month<br>• Invoice Type<br>- CRIS<br>- CABS<br>• Invoice Transmission Count<br>• Date of Scheduled Bill Close |

## SQM Disaggregation - Analog/Benchmark

| SQM Level of Disaggregation | SQM Analog/Benchmark |
|---|---|
| Product/Invoice Type<br>• Resale<br>• UNE<br>• Interconnection<br>• State | • CRIS-based invoices will be released for delivery within six (6) business days.<br>• CABS-based invoices will be released for delivery within eight (8) calendar days.<br>• CLEC Average Delivery Intervals for both CRIS and CABS Invoices are comparable to BellSouth Average delivery for both systems. |

## SEEM Measure

| SEEM Measure | | |
|---|---|---|
| Yes | Tier I | X |
| | Tier II | X |

## SEEM Disaggregation - Analog/Benchmark

| SEEM Disaggregation | SEEM Analog/Benchmark |
|---|---|
| • CLEC State<br>- CRIS<br>- CABS<br>• BST-State | • Parity with Retail |

# B-3: Usage Data Delivery Accuracy

## Definition

This measurement captures the percentage of recorded usage that is delivered error free and in an acceptable format to the appropriate Competitive Local Exchange Carrier (CLEC). These percentages will provide the necessary data for use as a comparative measurement for BellSouth performance. This measurement captures Data Delivery Accuracy rather than the accuracy of the individual usage recording.

## Exclusions

None

## Business Rules

The accuracy of the data delivery of usage records delivered by BellSouth to the CLEC must enable them to provide a degree of accuracy comparative to BellSouth bills rendered to their retail customers. If errors are detected in the delivery process, they are investigated, evaluated and documented. Errors are corrected and the data retransmitted to the CLEC.

## Calculation

**Usage Data Delivery Accuracy (Packs)** = (a - b) ÷ a X 100 **(This calculation not ordered by the FPSC)**

- a = Total number of usage data packs sent during current month
- b = Total number of usage data packs requiring retransmission during current month

**Usage Data Delivery Accuracy (Records)** = (c - d) ÷ c X 100

- c = Total number of usage records sent during current month
- d = Total number of usage records requiring retransmission during current month

## Report Structure

- CLEC Aggregate
- BellSouth Aggregate
- Geographic Scope
  - Region

## Data Retained

| Relating to CLEC Experience | Relating to BellSouth Performance |
|---|---|
| • Report Month<br>• Record Type<br>- BellSouth Recorded<br>- Non-BellSouth Recorded<br>• Number of Records<br>• Packs | • Report Month<br>• Record Type<br>• Number of Records<br>• Packs |

## SQM Disaggregation - Analog/Benchmark

| SQM Level of Disaggregation | SQM Analog/Benchmark |
|---|---|
| • Region | • Parity With Retail |

## SEEM Measure

| SEEM Measure | | |
|---|---|---|
| Yes | Tier I | |
| | Tier II | X |

## SEEM Disaggregation - Analog/Benchmark

| SEEM Disaggregation | SEEM Analog/Benchmark |
|---|---|
| • CLEC State (In Tennessee, SEEM is based on records.)<br>• BellSouth Region | • Parity with Retail |

# B-4: Usage Data Delivery Completeness

## Definition

This measurement provides percentage of complete and accurately recorded usage data (usage recorded by BellSouth and usage recorded by other companies and sent to BellSouth for billing) that is processed and transmitted to the CLEC within thirty (30) days of the message recording date. A parity measure is also provided showing completeness of BellSouth messages processed and transmitted via CMDS. BellSouth delivers its own retail usage from recording location to billing location via CMDS as well as delivering billing data to other companies. Timeliness, Completeness and Mean Time to Deliver Usage measures are reported on the same report.

## Exclusions

None

## Business Rules

The purpose of these measurements is to demonstrate the level of quality of usage data delivered to the appropriate CLEC. Method of delivery is at the option of the CLEC.

## Calculation

**Usage Data Delivery Completeness** = (a ÷ b) X 100

- a = Total number of Recorded usage records delivered during current month that are within thirty (30) days of the message recording date
- b = Total number of Recorded usage records delivered during the current month

## Report Structure

- CLEC Specific
- CLEC Aggregate
- BellSouth Aggregate
- Region

## Data Retained

| Relating to CLEC Experience | Relating to BellSouth Performance |
|---|---|
| • Report Month<br>• Record Type<br>- BellSouth Recorded<br>- Non-BellSouth Recorded | • Report Month<br>• Record Type |

## SQM Disaggregation - Analog/Benchmark

| SQM Level of Disaggregation | SQM Analog/Benchmark |
|---|---|
| • Region | • Parity With Retail |

## SEEM Measure

| SEEM Measure | | |
|---|---|---|
| No | Tier I | |
| | Tier II | |

## SEEM Disaggregation - Analog/Benchmark

| SEEM Disaggregation | SEEM Analog/Benchmark |
|---|---|
| • Not Applicable | • Not Applicable |

# B-5: Usage Data Delivery Timeliness

## Definition

This measurement provides a percentage of recorded usage data (usage recorded by BellSouth and usage recorded by other companies and sent to BellSouth for billing) that is delivered to the appropriate CLEC within six (6) calendar days from the receipt of the initial recording. A parity measure is also provided showing timeliness of BellSouth messages processed and transmitted via CMDS. Timeliness, Completeness and Mean Time to Deliver Usage measures are reported on the same report.

## Exclusions

None

## Business Rules

The purpose of this measurement is to demonstrate the level of timeliness for processing and transmission of usage data delivered to the appropriate CLEC. The usage data will be mechanically transmitted or mailed to the CLEC data processing center once daily. The Timeliness interval of usage recorded by other companies is measured from the date BellSouth receives the records to the date BellSouth distributes to the CLEC. Method of delivery is at the option of the CLEC

## Calculation

**Usage Data Delivery Timeliness Current month** = (a ÷ b) X 100

- a = Total number of usage records sent within six (6) calendar days from initial recording/receipt
- b = Total number of usage records sent

## Report Structure

- CLEC Aggregate
- CLEC Specific
- BellSouth Aggregate
- Region

## Data Retained

| Relating to CLEC Experience | Relating to BellSouth Performance |
|---|---|
| • Report Month<br>• Record Type<br>- BellSouth Recorded<br>- Non-BellSouth Recorded | • Report Month<br>• Record Type |

## SQM Level of Disaggregation - Analog/Benchmark

| SQM Level of Disaggregation | SQM Analog/Benchmark |
|---|---|
| • Region | • Parity with Retail |

## SEEM Measure

| SEEM Measure | | |
|---|---|---|
| No | Tier I | |
| | Tier II | |

## SEEM Disaggregation - Analog/Benchmark

| SEEM Disaggregation | SEEM Analog/Benchmark |
|---|---|
| • Not Applicable | • Not Applicable |

# B-6: Mean Time to Deliver Usage

## Definition

This measurement provides the average time it takes to deliver Usage Records to a CLEC. A parity measure is also provided showing timeliness of BellSouth messages processed and transmitted via CMDS. Timeliness, Completeness and Mean Time to Deliver Usage measures are reported on the same report.

## Exclusions

None

## Business Rules

The purpose of this measure is to calculate the average number of days it takes BellSouth to deliver usage data to the appropriate CLEC. The calculation reflects the differences between the date the data is transmitted or mailed to the CLEC and the date the data is generated by Customer divided by the total record volume delivery.

Each delivery record is calculated as the time, in days, between when the customer generates the call and when BellSouth delivers the usage data to the CLEC. Each delivery record is categorized by the resulting number of days.

An estimated interval is calculated for each category by taking the total number of usage data records delivered for that period and multiplying it by the total number of days in that period. The mean (average) time to deliver the usage data is calculated by summing all estimated intervals and dividing by the total number of records delivered.

**Note:** Any usage record falling in the 30+ day interval will be added using an average figure of 31.5 days.

Usage data is mechanically transmitted or mailed to the CLEC data processing center once daily. Method of delivery is at the option of the CLEC.

## Calculation

**Delivery Interval Record** = (a - b)

- a = Date BellSouth delivers the usage data
- b = Date usage data is generated by the customer

**Estimated Interval** = (c X d)

- c = Number of records delivered in each category
- d = Number of days to deliver for the category

**Mean Time to Deliver Usage** = (e ÷ f)

- e = Sum of all estimated intervals
- f = Total number of records delivered

## Report Structure

- CLEC Aggregate
- CLEC Specific
- BellSouth Aggregate
- Region

## Data Retained

| Relating to CLEC Experience | Relating to BellSouth Performance |
|---|---|
| • Report Month<br>• Record Type<br>- BellSouth Recorded<br>- Non-BellSouth Recorded | • Report Month<br>• Record Type |

## SQM Level of Disaggregation - Analog/Benchmark

| SQM Level of Disaggregation | SQM Analog/Benchmark |
|---|---|
| • Region | • Parity With Retail |

## SEEM Measure

| SEEM Measure | | |
|---|---|---|
| No | Tier I | |
| | Tier II | |

## SEEM Disaggregation - Analog/Benchmark

| SEEM Disaggregation | SEEM Analog/Benchmark |
|---|---|
| • Not Applicable | • Not Applicable |

# B-7: Recurring Charge Completeness

## Definition

This measure captures percentage of fractional recurring charges appearing on the correct bill.

## Exclusions

None

## Business Rules

The effective date of the recurring charge must be within 30 days of the bill date for the charge to appear on the correct bill.

## Calculation

**Recurring Charge Completeness** = (a ÷ b) X 100

- a = Count of fractional recurring charges that are on the correct bill[1]
- b = Total count of fractional recurring charges that are on the correct bill

[1]Correct bill = next available bill

## Report Structure

- CLEC Specific
- CLEC Aggregate
- BellSouth Aggregate

## Data Retained

| Relating to CLEC Experience | Relating to BellSouth Performance |
|---|---|
| • Report month<br>• Invoice Type<br>• Total Recurring Charges Billed<br>• Total Billed On Time | • Report month<br>• Retail Analog<br>• Total recurring charges billed<br>• Total Billed On Time |

## SQM Level of Disaggregation - Analog/Benchmark

| SQM Level of Disaggregation | SQM Analog/Benchmark |
|---|---|
| Product/Invoice Type | |
| • Resale | • Parity |
| • UNE | • Benchmark 90% |
| • Interconnection | • Benchmark 90% |

## SEEM Measure

| SEEM Measure | | |
|---|---|---|
| No | Tier I | |
| | Tier II | |

## SEEM Disaggregation - Analog/Benchmark

| SEEM Disaggregation | SEEM Analog/Benchmark |
|---|---|
| • Not Applicable | • Not Applicable |

# B-8: Non-Recurring Charge Completeness

## Definition

This measure captures percentage of non-recurring charges appearing on the correct bill.

## Exclusions

None

## Business Rules

The effective date of the non-recurring charge must be within 30 days of the bill date for the charge to appear on the correct bill.

## Calculation

**Non-Recurring Charge Completeness** = (a ÷ b) X 100

- a = Count of non-recurring charges that are on the correct bill[1]
- b = Total count of non-recurring charges that are on the correct bill

[1]Correct bill = next available bill

## Report Structure

- CLEC Specific
- CLEC Aggregate
- BellSouth Aggregate

## Data Retained

| Relating to CLEC Experience | Relating to BellSouth Performance |
|---|---|
| • Report month<br>• Invoice type<br>• Total non-recurring charges billed<br>• Total billed on time | • Report month<br>• Retail Analog<br>• Total non-recurring charges billed<br>• Total billed on time |

## SQM Level of Disaggregation - Analog/Benchmark

| SQM Level of Disaggregation | SQM Analog/Benchmark |
|---|---|
| Product/Invoice Type | |
| • Resale | • Parity |
| • UNE | • Benchmark 90% |
| • Interconnection | • Benchmark 90% |

## SEEM Measure

| SEEM Measure | | |
|---|---|---|
| No | Tier I | |
| | Tier II | |

## SEEM Disaggregation - Analog/Benchmark

| SEEM Disaggregation | SEEM Analog/Benchmark |
|---|---|
| • Not Applicable | • Not Applicable |

# B-9: Percent Daily Usage Feed Errors Corrected in X Business Days

## Definition

Measures the timely correction of Daily Usage Feed (DUF) errors in record information and Pack formats measured separately. Errors included (1) Pack Failure errors and (2) EMI content errors in records.

## Exclusions

- Usage that cannot be corrected and resent or usage that the CLEC doesn't want Retransmitted.
- CLEC Problem/Issue/File Retransmission forms disputed by BellSouth SMEs that do not result in an EMI error.
- CLEC notification received by BellSouth > 10 business days from transmission date of errored messages or packs.

## Business Rules

This measure will provide the % of errors corrected in X Business days.

Pack Failure errors are defined as a DUF header/trailer error containing one or more of the following conditions: Grand total records not equal to records in pack or sequence/invoice numbers for a from RAO is not sequential

EMI content errors are defined as those records with errors contained in the EMI detail records that cause a message to be unbillable by the CLEC

Only notification received via the CLEC Problem/Issue/File Retransmission form will be included in this measure. To locate the form, go to the PMAP web site (http://www.pmap.bellsouth.com/) and click the Documentation Downloads link, then select the "CLEC Problem/Issue/File Retransmission form."

When circumstances arise for multiple content errors it is not necessary for the form to be filled out in its entirety, the CLECs agree to provide sufficient information for content error research so that a thorough investigation and resolution can be completed.

For each type error condition, a new CLEC Problem/Issue/File Retransmission form should be submitted.

EMI content errors should be attached in a separate file from the CLEC Problem/Issue/File Retransmission form

Elapsed time is measured in business days.

The clock starts when BellSouth receives CLEC's Problem/Issue/File Retransmission form.

The clock stops when BellSouth provides the corrected usage to the CLEC using the predesignated DUF delivery method.

This measure applies only to CLECs that are ODUF and ADUF participants

## Calculation

**Timeliness of Daily Usage EMI Content Errors Corrected** = (a ÷ b) X 100

- a = Total number of Daily Usage Records with EMI Content Errors Corrected in the reporting month within 10 Business Days.
- b = Total number of Daily Usage Records with EMI Content Errors corrected in reporting month.

**Timeliness of Daily Usage Pack Format Errors Corrected** = (c ÷ d) X 100

- c= Total number of Daily Usage Packs with Format Errors Corrected in the reporting month within 4 Business Days.
- d = Total number of Daily Usage Packs with Format Errors corrected in reporting month

## Report Structure

- CLEC Specific
  - Total number of BST disputed Daily Usage Records with EMI Content Errors received in reporting month.
  - Total number of Daily Usage Records with EMI Content Errors received in reporting month.
  - Total number of BST disputed Daily Usage Packs with Format Errors received in reporting month
  - Total number of Daily Usage Packs with Format Errors received in reporting month
- CLEC Aggregate
- Geographic Scope
  - Region

## Data Retained

| Relating to CLEC Experience | Relating to BellSouth Performance |
|---|---|
| • Report month<br>- BellSouth Recorded<br>- Non-BellSouth Recorded | • None |

## SQM Level of Disaggregation - Analog/Benchmark

| SQM Level of Disaggregation | SQM Analog/Benchmark |
|---|---|
| • Region | • Diagnostic |

## SEEM Measure

| SEEM Measure | | |
|---|---|---|
| No | Tier I | |
| | Tier II | |

## SEEM Disaggregation - Analog/Benchmark

| SEEM Disaggregation | SEEM Analog/Benchmark |
|---|---|
| • Not Applicable | • Not Applicable |

# B-10: Percent Billing Errors Corrected in X Days

## Definition

Measures timely carrier bill adjustments.

## Exclusions

Billing adjustments requests that are rejected by BellSouth or disputed by BellSouth.

Adjustments that are initiated by BellSouth.

## Business Rules

This measure applies to CLEC wholesale bill adjustments. IXC Access billing adjustment requests are not reflected in this measure. Elapsed time is measured in business days. Clock starts when BellSouth receives the ALECs Billing Adjustment Request (BAR) form (BAR form and instructions found at WWW.interconnection.bellsouth.com/forms/html/billing & collections.html) and the clock stops when adjustments is made to bill through ACATS or BOCRIS (generally next CLEC bill unless adjustment request after middle of the month). BellSouth will report separately those adjustment requests that are disputed by BellSouth.

## Calculation

**Percent Billing Errors Corrected in 45 Days** = (a / b) X 100

- a = Number of BellSouth Adjustments in 45 Days
- b = Total Number of Adjustment Requests in Reporting Period

## Report Structure

- CLEC Specific
- CLEC Aggregate
- Geographic Scope:
- State Specific

## Data Retained

| Relating to CLEC Experience | Relating to BellSouth Performance |
|---|---|
| • Number of BellSouth Adjustments in 45 days<br>• Total number of Billing Adjustment Requests in Reporting Period<br>• Number of Adjustments disputed by BellSouth (reported separately) | • None |

## SQM Disaggregation - Retail Analog/Benchmark

| SQM Level of Disaggregation | SQM Analog/Benchmark |
|---|---|
| • State | • Diagnostic |

## SEEM Measure

| SEEM Measure | | |
|---|---|---|
| No | Tier I | |
| | Tier II | |

## SEEM Disaggregation - Analog/Benchmark

| SEEM Disaggregation | SEEM Analog/Benchmark |
|---|---|
| • Not Applicable | • Not Applicable |

# Section 6: Operator Services And Directory Assistance

## OS-1: Speed to Answer Performance/Average Speed to Answer – Toll

### Definition

Measurement of the average time in seconds calls wait before answered by a toll operator.

### Exclusions

None

### Business Rules

The clock starts when the customer enters the queue and the clock stops when a BellSouth representative answers the call or the customer abandons the call. The length of each call is determined by measuring, using a scanning technique, and accumulating the elapsed time from the entry of a customer call into the BellSouth call management system queue until the customer call is abandoned or transferred to BellSouth personnel assigned to handle calls for assistance. The system makes no distinction between CLEC customers and BellSouth customers.

### Calculation

**Speed to Answer Performance/Average Speed to Answer – Toll** = a ÷ b

- a = Total queue time
- b = Total calls answered

**Note**: Total queue time includes time that answered calls wait in queue as well as time abandoned calls wait in queue prior to abandonment.

### Report Structure

- Reported for the aggregate of BellSouth and CLECs
  - State

### Data Retained (on Aggregate Basis)

- For the items below, BellSouth's Performance Measurement Analysis Platform (PMAP) receives a final computation; therefore, no raw data file is available in PMAP
- Month
- Call Type (Toll)
- Average Speed of Answer

### SQM Disaggregation - Analog/Benchmark

| SQM Level of Disaggregation | SQM Analog/Benchmark |
|---|---|
| • None | • Parity by Design |

## SEEM Measure

| SEEM Measure | | |
|---|---|---|
| No | Tier I | |
| | Tier II | |

## SEEM Disaggregation - Analog/Benchmark

| SEEM Disaggregation | SEEM Analog/Benchmark |
|---|---|
| • Not Applicable | • Not Applicable |

# OS-2: Speed to Answer Performance/Percent Answered with "X" Seconds – Toll

## Definition

Measurement of the percent of toll calls that are answered in less than ten seconds

## Exclusions

None

## Business Rules

The clock starts when the customer enters the queue and the clock stops when a BellSouth representative answers the call or the customer abandons the call. The length of each call is determined by measuring, using a scanning technique, and accumulating the elapsed time from the entry of a customer call into the BellSouth call management system queue until the customer call is abandoned or transferred to BellSouth personnel assigned to handle calls for assistance. The system makes no distinction between CLEC customers and BellSouth customers.

## Calculation

The Percent Answered within "X" Seconds measurement for toll is derived by using the BellCore Statistical Answer Conversion Tables, to convert the Average Speed to Answer measure into a percent of calls answered within "X" seconds. The BellCore Conversion Tables are specific to the defined parameters of work time, number of operators, max queue size and call abandonment rates.

## Report Structure

- Reported for the aggregate of BellSouth and CLECs
  - State

## Data Retained (on Aggregate Basis)

- For the items below, BellSouth's Performance Measurement Analysis Platform (PMAP) receives a final computation; therefore, no raw data file is available in PMAP
- Month
- Call Type (Toll)
- Average Speed of Answer

## SQM Disaggregation - Analog/Benchmark

| SQM Level of Disaggregation: | SQM Analog/Benchmark |
|---|---|
| • None | • Parity by Design |

## SEEM Measure

| SEEM Measure | | |
|---|---|---|
| No | Tier I | |
| | Tier II | |

## SEEM Disaggregation - Analog/Benchmark

| SEEM Disaggregation | SEEM Analog/Benchmark |
|---|---|
| • Not Applicable | • Not Applicable |

# DA-1: Speed to Answer Performance/Average Speed to Answer – Directory Assistance (DA)

## Definition

Measurement of the average time in seconds calls wait before answered by a DA operator.

## Exclusions

None

## Business Rules

The clock starts when the customer enters the queue and the clock stops when a BellSouth representative answers the call or the customer abandons the call. The length of each call is determined by measuring, using a scanning technique, and accumulating the elapsed time from the entry of a customer call into the BellSouth call management system queue until the customer call is abandoned or transferred to BellSouth personnel assigned to handle calls for assistance. The system makes no distinction between CLEC customers and BellSouth customers.

## Calculation

**Speed to Answer Performance/Average Speed to Answer – Directory Assistance (DA)** = a ÷ b

- a = Total queue time
- b = Total calls answered

**Note**: Total queue time includes time that answered calls wait in queue as well as time abandoned calls wait in queue prior to abandonment.

## Report Structure

- Reported for the aggregate of BellSouth and CLECs
  - State

## Data Retained (on Aggregate Basis)

- For the items below, BellSouth's Performance Measurement Analysis Platform (PMAP) receives a final computation; therefore, no raw data file is available in PMAP
- Month
- Call Type (DA)
- Average Speed of Answer

## SQM Level of Disaggregation - Analog/Benchmark

| SQM Level of Disaggregation | SQM Analog/Benchmark |
|---|---|
| • None | • Parity by Design |

## SEEM Measure

| SEEM Measure | | |
|---|---|---|
| No | Tier I | |
| | Tier II | |

## SEEM Disaggregation - Analog/Benchmark

| SEEM Disaggregation | SEEM Analog/Benchmark |
|---|---|
| • Not Applicable | • Not Applicable |

# DA-2: Speed to Answer Performance/Percent Answered within "X" Seconds – Directory Assistance (DA)



## Definition

Measurement of the percent of DA calls that are answered in less than twelve seconds.

## Exclusions

None

## Business Rules

The clock starts when the customer enters the queue and the clock stops when a BellSouth representative answers the call or the customer abandons the call. The length of each call is determined by measuring, using a scanning technique, and accumulating the elapsed time from the entry of a customer call into the BellSouth call management system queue until the customer call is abandoned or transferred to BellSouth personnel assigned to handle calls for assistance. The system makes no distinction between CLEC customers and BellSouth customers.

## Calculation

The Percent Answered within "X" Seconds measurement for DA is derived by using the BellCore Statistical Answer Conversion Tables, to convert the Average Speed to Answer measure into a percent of calls answered within "X" seconds. The BellCore Conversion Tables are specific to the defined parameters of work time, number of operators, max queue size and call abandonment rates.

## Report Structure

- Reported for the aggregate of BellSouth and CLECs
  - State

## Data Retained (on Aggregate Basis)

- For the items below, BellSouth's Performance Measurement Analysis Platform (PMAP) receives a final computation; therefore, no raw data file is available in PMAP.
- Month
- Call Type (DA)
- Average Speed of Answer

## SQM Disaggregation - Analog/Benchmark

| SQM Level of Disaggregation | SQM Analog/Benchmark |
|---|---|
| • None | • Parity by Design |

## SEEM Measure

| SEEM Measure | | |
|---|---|---|
| No | Tier I | |
| | Tier II | |

## SEEM Disaggregation - Analog/Benchmark

| SEEM Disaggregation | SEEM Analog/Benchmark |
|---|---|
| • Not Applicable | • Not Applicable |

# Section 7: Database Update Information

## D-1: Average Database Update Interval

### Definition

This report measures the interval from receipt of the database change request to the completion of the update to the database for Line Information Database (LIDB), Directory Assistance and Directory Listings.

### Exclusions

- Updates Canceled by the CLEC
- Initial update when supplemented by CLEC
- BellSouth updates associated with internal or administrative use of local services.

### Business Rules

The interval for this measure begins with the date and time stamp when a service order is completed and the completion notice is released to all systems to be updated with the order information including Directory Assistance, Directory Listings, and Line Information Database (LIDB). The end time stamp is the date and time of completion of updates to the system.

**For BellSouth Results**:

The BellSouth computation is identical to that for the CLEC with the clarifications noted below.

**Other Clarifications and Qualification:**

- For LIDB, the elapsed time for a BellSouth update is measured from the point in time when the BellSouth file maintenance process makes the LIDB update information available until the date and time reported by BellSouth that database updates are completed.
- Results for the CLECs are captured and reported at the update level by Reporting Dimension (see below).
- The Completion Date is the date upon which BellSouth issues the Update Completion Notice to the CLEC.
- If the CLEC initiates a supplement to the originally submitted update and the supplement reflects changes in customer requirements (rather than responding to BellSouth initiated changes), then the update submission date and time will be the date and time of BellSouth receipt of a syntactically correct update supplement. Update activities responding to BellSouth initiated changes will not result in changes to the update submission date and time used for the purposes of computing the update completion interval.
- Elapsed time is measured in hours and hundredths of hours rounded to the nearest tenth of an hour.
- Because this should be a highly automated process, the accumulation of elapsed time continues through off-schedule, weekends and holidays; however, scheduled maintenance windows are excluded.

### Calculation

**Update Interval** = (a - b)

- a = Completion Date & Time of Database Update
- b = Submission Date and Time of Database Change

**Average Update Interval** = (c ÷ d)

- c = Sum of all Update Intervals
- d = Total Number of Updates Completed During Reporting Period

### Report Structure

- CLEC Specific (Under development)
- CLEC Aggregate
- BellSouth Aggregate

## Data Retained

| Relating to CLEC Experience | Relating to BellSouth Performance |
|---|---|
| • Database File Submission Time<br>• Database File Update Completion Time<br>• CLEC Number of Submissions<br>• Total Number of Updates | • Database File Submission Time<br>• Database File Update Completion Time<br>• BellSouth Number of Submissions<br>• Total Number of Updates |

## SQM Disaggregation - Analog/Benchmark

| SQM Level of Disaggregation: | SQM Analog/Benchmark |
|---|---|
| Database Type<br>• LIDB<br>• Directory Listings<br>• Directory Assistance | • Parity by Design |

## SEEM Measure

| SEEM Measure | | |
|---|---|---|
| No | Tier I | |
| | Tier II | |

## SEEM Disaggregation - Analog/Benchmark

| SEEM Disaggregation | SEEM Analog/Benchmark |
|---|---|
| • Not Applicable | • Not Applicable |

# D-2: Percent Database Update Accuracy

## Definition

This report measures the accuracy of database updates by BellSouth for Line Information Database (LIDB) Directory Assistance and Directory Listings using a statistically valid sample of LSRs/Orders in a manual review. This manual review is not conducted on BellSouth Retail Orders.

## Exclusions

- Updates canceled by the CLEC
- Initial update when supplemented by CLEC
- CLEC orders that had CLEC errors
- BellSouth updates associated with internal or administrative use of local services.

## Business Rules

For each update completed during the reporting period, the original update that the CLEC sent to BellSouth is compared to the database following completion of the update by BellSouth. An update is "completed without error" if the database completely and accurately reflects the activity specified on the original and supplemental update (e.g., orders) submitted by the CLEC. Each database (e.g., LIDB, Directory Assistance and Directory Listings) should be separately tracked and reported.

A statistically valid sample of CLEC Orders will be pulled each month. The sample will be used to test the accuracy of the database update process. This is a manual process.

## Calculation

**Percent Update Accuracy** = (a ÷ b) X 100

- a = Number of Updates Completed Without Error
- b = Number Updates Completed

## Report Structure

- CLEC Aggregate
- CLEC Specific (not available in this report)
- BellSouth Aggregate (not available in this report)

## Data Retained

| Relating to CLEC Experience | Relating to BellSouth Performance |
|---|---|
| • Report Month<br>• CLEC Order Number (so_nbr) and PON (PON)<br>• Local Service Request (LSR)<br>• Order Submission Date<br>• Number of Orders Reviewed<br>**Note**: Code in parentheses is the corresponding header found in the raw data file. | • Not Applicable |

## SQM Disaggregation - Analog/Benchmark

| SQM Level of Disaggregation | SQM Analog/Benchmark |
|---|---|
| Database Type<br>• LIDB<br>• Directory Listings | • 95% Accurate |

## SEEM Measure

| SEEM Measure | | |
|---|---|---|
| No | Tier I | |
| | Tier II | |

## SEEM Disaggregation - Analog/Benchmark

| SEEM Disaggregation | SEEM Analog/Benchmark |
|---|---|
| • Not Applicable | • Not Applicable |

# D-3: Percent NXXs and LRNs Loaded by the LERG Effective Date

## Definition

Measurement of the percent of NXX(s) and Location Routing Numbers LRN(s) loaded and tested in new end office and/or tandem switches by the Local Exchange Routing Guide (LERG) effective date when facilities are in place. BellSouth has a single provisioning process for both NXX(s) and LRN(s). In this measure BellSouth will identify whether or not a particular NXX has been flagged as LNP capable (set triggers for dips) by the LERG effective date.

An LRN is assigned by the owner of the switch and is placed into the software translations for every switch to be used as an administrative pointer to route NXX(s) in LNP capable switches. The LRN is a result of Local Number Porting and is housed in a national database provided by the Number Portability Administration Center (NPAC). The switch owner is responsible for notifying NPAC and requesting the effective date that will be reflected in the LERG. The national database downloads routing tables into BellSouth's Service Control Point (SCP) regional databases, which are queried by switches when routing ported numbers.

The basic NXX routing process includes the addition of all NXX(s) in the response translations. This addition to response translations is what supports LRN routing. Routing instructions for all NXX(s), including LRN(s), are received from the Advance Routing & Trunking System (ARTS) and all routing, including response, is established based on the information contained in the Translation Work Instructions (TWINs) document.

## Exclusions

- Activation requests where the CLEC's interconnection arrangements and facilities are not in place by the LERG effective date.
- Expedite requests

## Business Rules

Data for the initial NXX(s) and LRN(s) in a local calling area will be based on the LERG effective date or completion of the initial interconnection trunk group(s), whichever is longer. Data for additional NXX(s) in the local calling area will be based on the LERG effective date. The LERG effective date is loaded into the system at the request of the CLEC. It is contingent upon the CLEC to engineer, order, and install interconnection arrangements and facilities prior to that date.

The total Count of NXX(s) and LRN(s) that were scheduled to be loaded and those that were loaded by the LERG effective date in BellSouth switches will be captured in the Work Force Administration -Dispatch In database.

## Calculation

**Percent NXXs/LRNs Loaded and Tested Prior to the LERG Effective Date** = (a ÷ b) X 100

- a = Count of NXXs and LRNs loaded by the LERG effective date
- b = Total NXXs and LRNs to be scheduled and loaded by the LERG effective date

## Report Structure

- CLEC Specific
- CLEC Aggregate
- BellSouth (Not Applicable)

## Data Retained

| Relating to CLEC Experience | Relating to BellSouth Performance |
|---|---|
| • Company Name<br>• Company Code<br>• NPA/NXX<br>• LERG Effective Date<br>• Loaded Date | • Not Applicable |

## SQM Disaggregation - Analog/Benchmark

| SQM Level of Disaggregation | SQM Analog/Benchmark |
|---|---|
| • Geographic Scope<br>- Region | • 100% by LERG Effective Date |

## SEEM Measure

| SEEM Measure | | |
|---|---|---|
| No | Tier I | |
| | Tier II | |

## SEEM Disaggregation - Analog/Benchmark

| SEEM Disaggregation | SEEM Analog/Benchmark |
|---|---|
| • Not Applicable | • Not Applicable |

# Section 8: E911

## E-1: Timeliness

### Definition

Measures the percent of batch orders for E911 database updates (to CLEC resale and BellSouth retail records) processed successfully within a 24-hour period.

### Exclusions

- Any resale order canceled by a CLEC
- Facilities-based CLEC orders

### Business Rules

The 24-hour processing period is calculated based on the date and time processing starts on the batch orders and the date and time processing stops on the batch orders. Mechanical processing starts when SCC (the BellSouth E911 vendor) receives E911 files containing batch orders extracted from the BellSouth Service Order Control System (SOCS). Processing stops when SCC loads the individual records to the E911 database. The E911 database includes updates to the Automatic Location Identification (ALI) database. The system makes no distinction between CLEC resale records and BellSouth retail records.

### Calculation

**E911 Timeliness** = (a ÷ b) X 100

- a = Number of batch orders processed within 24 hours
- b = Total number of batch orders submitted

### Report Structure

Reported for the aggregate of CLEC resale updates and BellSouth retail updates

- State
- Region

### Data Retained

- Report month
- Aggregate data

### SQM Disaggregation - Analog/Benchmark

| SQM Level of Disaggregation | SQM Analog/Benchmark |
|---|---|
| • None | • Parity by Design |

### SEEM Measure

| SEEM Measure | | |
|---|---|---|
| No | Tier I | |
| | Tier II | |

## SEEM Disaggregation - Analog/Benchmark

| SEEM Disaggregation | SEEM Analog/Benchmark |
|---|---|
| • Not Applicable | • Not Applicable |

# E-2: Accuracy

## Definition

Measures the percent of E911 telephone number (TN) record updates (to CLEC resale and BellSouth retail records) processed successfully for E911 (including the Automatic Location Identification (ALI) database).

## Exclusions

- Any resale order canceled by a CLEC
- Facilities-based CLEC orders

## Business Rules

Accuracy is based on the number of records processed without error at the conclusion of the processing cycle. Mechanical processing starts when SCC (the BellSouth E911 vendor) receives E911 files containing telephone number (TN) records extracted from BellSouth's Service Order Control System (SOCS). The system makes no distinction between CLEC resale records and BellSouth retail records.

## Calculation

**E911 Accuracy** = (a ÷ b) X 100

- a = Number of record individual updates processed with no errors
- b = Total number of individual record updates

## Report Structure

Reported for the aggregate of CLEC resale updates and BellSouth retail updates

- State
- Region

## Data Retained

- Report month
- Aggregate data

## SQM Disaggregation - Analog/Benchmark

| SQM Level of Disaggregation | SQM Analog/Benchmark |
|---|---|
| • None | • Parity by Design |

## SEEM Measure

| SEEM Measure | | |
|---|---|---|
| No | Tier I | |
| | Tier II | |

## SEEM Disaggregation - Analog/Benchmark

| SEEM Disaggregation | SEEM Analog/Benchmark |
|---|---|
| • Not Applicable | • Not Applicable |

# E-3: Mean Interval

## Definition

Measures the mean interval processing of E911 batch orders (to update CLEC resale and BellSouth retail records) including processing against the Automatic Location Identification (ALI) database.

## Exclusions

- Any resale order canceled by a CLEC
- Facilities-based CLEC orders

## Business Rules

The processing period is calculated based on the date and time processing starts on the batch orders and the date and time processing stops on the batch orders. Data is posted is 4-hour increments up to and beyond 24 hours. The system makes no distinction between CLEC resale records and BellSouth retail records.

## Calculation

**E911 Interval** = (a - b)

- a = Date and time of batch order completion
- b = Date and time of batch order submission

**E911 Mean Interval** = (c ÷ d)

- c = Sum of all E911 Intervals
- d = Number of batch orders completed

## Report Structure

Reported for the aggregate of CLEC resale updates and BellSouth retail updates

- State
- Region

## Data Retained

- Report month
- Aggregate data

## SQM Disaggregation - Analog/Benchmark

| SQM Level of Disaggregation | SQM Analog/Benchmark |
|---|---|
| • None | • Parity by Design |

## SEEM Measure

| SEEM Measure | | |
|---|---|---|
| No | Tier I | |
| | Tier II | |

## SEEM Disaggregation - Analog/Benchmark

| SEEM Disaggregation | SEEM Analog/Benchmark |
|---|---|
| • Not Applicable | • Not Applicable |

# Section 9: Trunk Group Performance

## TGP-1: Trunk Group Performance-Aggregate

### Definition

The Trunk Group Performance report displays, over a reporting cycle, aggregate, average trunk group blocking data for each hour of each day of the reporting cycle, for both CLEC affecting and BellSouth affecting trunk groups.

### Exclusions

- Trunk Groups for which there was no valid data available for an entire study period
- Duplicate trunk group information

### Business Rules

The purpose of the Trunk Group Performance Report is to provide trunk blocking measurements on CLEC and BellSouth trunk groups for comparison only. It is not the intent of the report that it be used for network management and/or engineering.

**Monthly Average Blocking**:

- The reporting cycle includes both business and non-business days in a calendar month.
- Monthly average blocking values are calculated for each trunk group for each of the 24 time consistent hours across a reporting cycle.

**Aggregate Monthly Blocking**:

- Used to compare aggregate blocking across trunk groups which terminate traffic at CLEC points of presence versus BellSouth switches.
- Aggregate monthly blocking data is calculated for each hour of the day across all trunk groups assigned to a category.

**Trunk Categorization**:

This report displays, over a reporting cycle, aggregate, average blocking data for each hour of a day. Therefore, for each reporting cycle, 24 blocking data points are generated for two aggregate groups of selected trunk groups. These groups are CLEC affecting and BellSouth affecting trunk groups. In order to assign trunk groups to each aggregate group, all trunk groups are first assigned to a category. A trunk group's end points and the type of traffic that is transmitted on it define a category. Selected categories of trunk groups are assigned to the aggregate groups so that trunk reports can be generated. The categories to which trunk groups have been assigned for this report are as follows.

**CLEC Affecting Categories**:

| | Point A | Point B |
|---|---|---|
| Category 1: | BellSouth End Office | BellSouth Access Tandem |
| Category 3: | BellSouth End Office | CLEC Switch |
| Category 4: | BellSouth Local Tandem | CLEC Switch |
| Category 5: | BellSouth Access Tandem | CLEC Switch |
| Category 10: | BellSouth End Office | BellSouth Local Tandem |
| Category 16: | BellSouth Tandem | BellSouth Tandem |

BellSouth Affecting Categories:

| | Point A | Point B |
|---|---|---|
| Category 9: | BellSouth End Office | BellSouth End Office |

## Calculation

**Monthly Average Blocking:**

- For each hour of the day, each day's raw data are summed across all valid measurements days in a report cycle for blocked and attempted calls.
- The sum of the blocked calls is divided by the total number of calls attempted in a reporting period.

**Aggregate Monthly Blocking**:

- For each hour of the day, the monthly sums of the blocked and attempted calls from each trunk group are separately aggregated over all trunk groups within each assigned category.
- The total blocked calls is divided by the total call attempts within a group to calculate an aggregate monthly blocking for each assigned group.
- The result is an aggregate monthly average blocking value for each of the 24 hours by group.
- The difference between the CLEC and BellSouth affecting trunk groups are also calculated for each hour.

## Report Structure

- CLEC Aggregate
- BellSouth Aggregate
  - State

## Data Retained

| Relating to CLEC Experience | Relating to BellSouth Performance |
|---|---|
| • Report Month<br>• Total Trunk Groups<br>• Number of Trunk Groups by CLEC<br>• Hourly Blocking Per Trunk Group<br>• Hourly Usage Per Trunk Group<br>• Hourly Call Attempts Per Trunk Group | • Report Month<br>• Total Trunk Groups<br>• Aggregate Hourly Blocking Per Trunk Group<br>• Hourly Usage Per Trunk Group<br>• Hourly Call Attempts Per Trunk Group |

## SQM Disaggregation - Analog/Benchmark

| SQM Level of Disaggregation | SQM Analog/Benchmark |
|---|---|
| • CLEC Aggregate<br>• BellSouth Aggregate | • Any 2 hour period in 24 hours where CLEC blockage exceeds BellSouth blockage by more than 0.5% using trunk groups 1, 3, 4, 5, 10, 16 for CLECs and 9 for BellSouth |

## SEEM Measure

| SEEM Measure | | |
|---|---|---|
| Yes | Tier I | |
| | Tier II | X |

## SEEM Disaggregation - Analog/Benchmark

| SEEM Disaggregation | SEEM Analog/Benchmark |
|---|---|
| • CLEC Aggregate<br>• BellSouth Aggregate | • Any 2 hour period in 24 hours where CLEC blockage exceeds BellSouth blockage by more than 0.5% using trunk groups 1,3,4,5,10,16 for CLECs and 9 for BellSouth |

# TGP-2: Trunk Group Performance – CLEC Specific

## Definition

The Trunk Group Performance report displays, over a reporting cycle, aggregate, average trunk group blocking data for each hour of each day of the reporting cycle, for both CLEC affecting and BellSouth affecting trunk groups.

## Exclusions

- Trunk Groups for which there was no valid data available for an entire study period
- Duplicate trunk group information

## Business Rules

The purpose of the Trunk Group Performance Report is to provide trunk blocking measurements on CLEC and BellSouth trunk groups for comparison only. It is not the intent of the report that it be used for network management and/or engineering.

**Monthly Average Blocking**:

- The reporting cycle includes both business and non-business days in a calendar month.
- Monthly average blocking values are calculated for each trunk group for each of the 24 time consistent hours across a reporting cycle.

**Aggregate Monthly Blocking**:

- Used to compare aggregate blocking across trunk groups which terminate traffic at CLEC points of presence versus BellSouth switches.
- Aggregate monthly blocking data is calculated for each hour of the day across all trunk groups assigned to a category.

**Trunk Categorization**:

- This report displays, over a reporting cycle, aggregate, average blocking data for each hour of a day. Therefore, for each reporting cycle, 24 blocking data points are generated for two aggregate groups of selected trunk groups. These groups are CLEC affecting and BellSouth affecting trunk groups. In order to assign trunk groups to each aggregate group, all trunk groups are first assigned to a category. A trunk group's end points and the type of traffic that is transmitted on it define a category. Selected categories of trunk groups are assigned to the aggregate groups so that trunk reports can be generated. The categories to which trunk groups have been assigned for this report are as follows.

**CLEC Affecting Categories**:

| | Point A | Point B |
|---|---|---|
| Category 1: | BellSouth End Office | BellSouth Access Tandem |
| Category 3: | BellSouth End Office | CLEC Switch |
| Category 4: | BellSouth Local Tandem | CLEC Switch |
| Category 5: | BellSouth Access Tandem | CLEC Switch |
| Category 10: | BellSouth End Office | BellSouth Local Tandem |
| Category 16: | BellSouth Tandem | BellSouth Tandem |

**BellSouth Affecting Categories**:

| | Point A | Point B |
|---|---|---|
| Category 9: | BellSouth End Office | BellSouth End Office |

## Calculation

**Monthly Average Blocking**:

- For each hour of the day, each day's raw data are summed across all valid measurements days in a report cycle for blocked and attempted calls.
- The sum of the blocked calls is divided by the total number of calls attempted in a reporting period.

**Aggregate Monthly Blocking**:

- For each hour of the day, the monthly sums of the blocked and attempted calls from each trunk group are separately aggregated over all trunk groups within each assigned category.
- The total blocked calls is divided by the total call attempts within a group to calculate an aggregate monthly blocking for each assigned group.
- The result is an aggregate monthly average blocking value for each of the 24 hours by group.
- The difference between the CLEC and BellSouth affecting trunk groups are also calculated for each hour.

## Report Structure

- CLEC Specific
  - State

## Data Retained

| Relating to CLEC Experience | Relating to BellSouth Performance |
|---|---|
| • Report Month<br>• Total Trunk Groups<br>• Number of Trunk Groups by CLEC<br>• Hourly Blocking Per Trunk Group<br>• Hourly Usage Per Trunk Group<br>• Hourly Call Attempts Per Trunk Group | • Report Month<br>• Total Trunk Groups<br>• Aggregate Hourly Blocking Per Trunk Group<br>• Hourly Usage Per Trunk Group<br>• Hourly Call Attempts Per Trunk Group |

## SQM Disaggregation - Analog/Benchmark

| SQM Level of Disaggregation | SQM Analog/Benchmark |
|---|---|
| • CLEC Trunk Group | • Any 2 hour period in 24 hours where CLEC blockage exceeds BellSouth blockage by more than 0.5% using trunk groups 1, 3, 4, 5, 10, 16 for CLECs and 9 for BellSouth |

## SEEM Measure

| SEEM Measure | | |
|---|---|---|
| Yes | Tier I | X |
| | Tier II | |

## SEEM Disaggregation - Analog/Benchmark

| SEEM Disaggregation | SEEM Analog/Benchmark |
|---|---|
| • CLEC Trunk Group<br>• BellSouth Trunk Group | • Any 2 hour period in 24 hours where CLEC blockage exceeds BellSouth blockage by more than 0.5% using trunk groups 1, 3, 4, 5, 10, 16 for CLECs and 9 for BellSouth |

# Section 10: Collocation

## C-1: Collocation Average Response Time

### Definition

Measures the average time (counted in calendar days) from the receipt of a complete and accurate collocation application (including receipt of application fee if required) to the date BellSouth returns a response electronically or in writing. Within 10 calendar days after having received a bona fide application for physical collocation, BellSouth must respond as to whether space is available or not.

### Exclusions

Any application canceled by the CLEC

### Business Rules

The clock starts on the date that BellSouth receives a complete and accurate collocation application accompanied by the appropriate application fee if required. The clock stops on the date that BellSouth returns a response. The clock will restart upon receipt of changes to the original application request.

### Calculation

**Response Time** = (a - b)

- a = Request Response Date
- b = Request Submission Date

**Average Response Time** = (c ÷ d)

- c = Sum of all Response Times
- d = Count of Responses Returned within Reporting Period

### Report Structure

- Individual CLEC (alias) aggregate
- Aggregate of all CLECs

### Data Retained

- Report period
- Aggregate data

### SQM Disaggregation - Analog/Benchmark

| SQM Level of Disaggregation | SQM Analog/Benchmark |
|---|---|
| • State<br>• Virtual-Initial<br>• Virtual-Augment<br>• Physical Caged-Initial<br>• Physical Caged-Augment<br>• Physical-Cageless-Initial<br>• Physical Cageless-Augment | • Virtual - 15 Calendar Days<br>• Physical Caged - 15 Calendar Days<br>• Physical Cageless - 15 Calendar Days |

## SEEM Measure

| SEEM Measure | | |
|---|---|---|
| No | Tier I | |
| | Tier II | |

## SEEM Disaggregation - Analog/Benchmark

| SEEM Disaggregation | SEEM Analog/Benchmark |
|---|---|
| • Not Applicable | • Not Applicable |

# C-2: Collocation Average Arrangement Time

## Definition

Measures the average time (counted in calendar days) from receipt of a complete and accurate Bona Fide firm order (including receipt of appropriate fee if required) to the date BellSouth completes the collocation arrangement and notifies the CLEC and the CLEC accepts the arrangement.

## Exclusions

Any Bona Fide firm order canceled by the CLEC

## Business Rules

The clock starts on the date that BellSouth receives a complete and accurate Bone Fide firm order accompanied by the appropriate fee. The clock stops on the date that BellSouth completes the collocation arrangement and notifies the CLEC. The cable assignments associated with the specific collocation request will be provided prior to completion of the arrangement.

## Calculation

**Arrangement Time** = (a - b)

- a = Date Collocation Arrangement is Complete
- b = Date Order for Collocation Arrangement Submitted

**Average Arrangement Time** = (c ÷ d)

- c = Sum of all Arrangement Times
- d = Total Number of Collocation Arrangements Completed during Reporting Period

## Report Structure

- Individual CLEC (alias) aggregate
- Aggregate of all CLECs

## Data Retained

- Report period
- Aggregate data

## SQM Disaggregation - Analog/Benchmark

| SQM Level of Disaggregation | SQM Analog/Benchmark |
|---|---|
| • State<br>• Virtual-Initial<br>• Virtual-Augment<br>• Physical Caged-Initial<br>• Physical Caged-Augment<br>• Physical Cageless-Initial<br>• Physical Cageless-Augment | • Virtual - 60 Calendar Days<br>• Virtual-Augment - 45 Calendar Days (Without Space Increase)<br>• Virtual-Augment - 60 Calendar Days (With Space Increase)<br>• Physical Caged - 90 Calendar Days (Ordinary)<br>• Physical Caged-Augment - 45 Calendar Days (Without Space Increase)<br>• Physical Caged-Augment - 90 Calendar Days (With Space Increase)<br>• Physical Cageless - 90 Calendar Days<br>• Physical Cagedless-Augment - 45 Calendar Days (Without Space Increase)<br>• Physical Cagedless-Augment - 90 Calendar Days (With Space Increase) |

## SEEM Measure

| SEEM Measure | | |
|---|---|---|
| No | Tier I | |
| | Tier II | |

## SEEM Disaggregation - Analog/Benchmark

| SEEM Disaggregation | SEEM Analog/Benchmark |
|---|---|
| • Not Applicable | • Not Applicable |

# C-3: Collocation Percent of Due Dates Missed

## Definition

Measures the percent of missed due dates for both virtual and physical collocation arrangements

## Exclusions

Any Bona Fide firm order canceled by the CLEC

## Business Rules

Percent Due Dates Missed is the percent of total collocation arrangements which BellSouth is unable to complete by end of the BellSouth committed due date. The clock starts on the date that BellSouth receives a complete and accurate Bona Fide firm order accompanied by the appropriate fee if required. The arrangement is considered a missed due date if it is not completed on or before the committed due date

## Calculation

**% of Due Dates Missed** = (a ÷ b) X 100

- a = Number of Completed Orders that were not completed within BellSouth Committed Due Date during Reporting Period
- b = Number of Orders Completed in Reporting Period

## Report Structure

- Individual CLEC (alias) aggregate
- Aggregate of all CLECs

## Data Retained

- Report period
- Aggregate data

## SQM Disaggregation - Analog/Benchmark

| SQM Level of Disaggregation | SQM Analog/Benchmark |
|---|---|
| • State<br>• Virtual-Initial<br>• Virtual- Augment<br>• Physical Caged- Initial<br>• Physical Caged- Augment<br>• Physical Cageless- Initial<br>• Physical Cageless- Augment | • ≥ 95% on time |

## SEEM Measure

| SEEM Measure | | |
|---|---|---|
| Yes | Tier I | X |
| | Tier II | X |

## SEEM Disaggregation - Analog/Benchmark

| SEEM Disaggregation | SEEM Analog/Benchmark |
|---|---|
| • All Collocation Arrangements | • ≥ 95% on time |

# Section 11: Change Management

## CM-1: Timeliness of Change Management Notices

### Definition

Measures whether CLECs receive required software release notices on time to prepare for BellSouth interface/system changes so CLEC interfaces are not impaired by change.

### Exclusions

- Changes to release dates for reasons outside BellSouth control, such as the system software vendor changes. For example: a patch to fix a software problem.
- Type 6 Change Requests (Defects/Expedites), as defined by the Change Control Process (CCP)

### Business Rules

This metric is designed to measure the percent of change management notices sent to the CLECs according to notification standards and time frames set forth in the Change Control Process. The CCP is used by BellSouth and the CLECs to manage requested changes to the BellSouth Local Interfaces.

The clock starts on the notification date. The clock stops on the software release date. When project events occur (scope changes, analysis information, etc.), the software release date may change. A revised notification would be required and the clock would restart. Based on release constraints for defects/expedites, notification may be less than the agreed upon interval in the CCP for new features.

### Calculation

**Timeliness of Change Management Notices** = (a ÷ b) X 100

- a = Total number of Change Management Notifications Sent Within Required Time frames
- b = Total Number of Change Management Notifications Sent

### Report Structure

- BellSouth Aggregate

### Data Retained

- Report Period
- Notice Date
- Release Date

### SQM Disaggregation - Analog/Benchmark

| SQM Level of Disaggregation | SQM Analog/Benchmark |
|---|---|
| • Region | • 98% on time |

### SEEM Measure

| SEEM Measure | | |
|---|---|---|
| Yes | Tier I | |
| | Tier II | X |

## SEEM Disaggregation - Analog/Benchmark

| SEEM Disaggregation | SEEM Analog/Benchmark |
|---|---|
| • Region | • 98% on time |

# CM-2: Change Management Notice Average Delay Days

## Definition

Measures the average delay days for change management system release notices sent outside the time frame set forth in the Change Control Process.

## Exclusions

- Changes to release dates for reasons outside BellSouth control, such as the system vendor
- Type 6 Change Requests (Defects/Expedites), as defined by the Change Control Process

## Business Rules

This metric is designed to measure the percent of change management notices sent to the CLECs according to notification standards and time frames set forth in the Change Control Process. The CCP is used by BellSouth and the CLECs to manage requested changes to the BellSouth Local Interfaces.

The clock starts on the notification due date. The clock stops on the software release date. When project events occur (scope changes, analysis information, etc.), the software release date may change. A revised notification would be required and the clock would restart. Based on release constraints for defects/expedites, notification may be less than the agreed upon interval in the CCP for new features

## Calculation

**Change Management Notice Delay Days** = (a - b)

- a = Date Notice Sent
- b = Date Notice Due

**Change Management Notice Average Delay Days** = (c ÷ d)

- c = Sum of all Change Management Notice Delay Days
- d = Total Number of Notices Sent Late

## Report Structure

- BellSouth Aggregate

## Data Retained

- Report Period
- Notice Date
- Release Date

## SQM Disaggregation - Analog/Benchmark

| SQM Level of Disaggregation | SQM Analog/Benchmark |
|---|---|
| • Region | • ≤ 5 Days |

## SEEM Measure

| SEEM Measure | | |
|---|---|---|
| No | Tier I | |
| | Tier II | |

## SEEM Disaggregation - Analog/Benchmark

| SEEM Disaggregation | SEEM Analog/Benchmark |
|---|---|
| • Not Applicable | • Not Applicable |

# CM-3: Timeliness of Documents Associated with Change

## Definition

Measures whether CLECs received requirements or business rule documentation on time to prepare for BellSouth interface/system changes so CLEC interfaces are not impaired by change as set forth in the Change Control Process governed by the CLEC/BellSouth Review Board.

## Exclusions

- Documentation for release dates that slip less than 30 days for a change mandated by regulatory or legal entities (Federal Communications Commission [FCC], a state commission/authority, or state and federal courts) or CLEC request.
- Type 6 Change Requests (Defects/Expedites), as defined by the Change Control Process.

## Business Rules

This metric is designed to measure the percent of requirements or business rule documentation sent to the CLECs according to documentation standards and time frames set forth in the Change Control Process. The CCP is used by BellSouth and the CLECs to manage requested changes to the BellSouth Local Interfaces.

The clock starts on the business rule documentation release date. The clock stops on the software release date. When project events occur (scope changes, analysis information, etc.), the software release date may change. Revisions to documentation could be required and the clock would restart.

## Calculation

**Timeliness of Documents Associated with Change** = (a ÷ b) X 100

- a = Change Management Documentation Sent Within Required Time frames after Notices
- b = Total Number of Change Management Documentation Sent

## Report Structure

- BellSouth Aggregate

## Data Retained

- Report Period
- Notice Date
- Release Date

## SQM Disaggregation - Analog/Benchmark

| SQM Level of Disaggregation | SQM Analog/Benchmark |
|---|---|
| • Region | • 98% on Time |

## SEEM Measure

| SEEM Measure | | |
|---|---|---|
| Yes | Tier I | |
| | Tier II | X |

## SEEM Disaggregation - Analog/Benchmark

| SEEM Disaggregation | SEEM Analog/Benchmark |
|---|---|
| • Region | • 98% on Time |

# CM-4: Change Management Documentation Average Delay Days



## Definition

Measures the average delay days for requirements or business rule documentation sent outside the time frames set forth in the Change Control Process.

## Exclusions

- Documentation for release dates that slip less than 30 days for reasons outside BellSouth control, such as changes due to Regulatory mandate or CLEC request.
- Type 6 Change Requests (Defects/Expedites), as defined by the Change Control Process.

## Business Rules

This metric is designed to measure the percent of requirements or business rule documentation sent to the CLECs according to documentation standards and time frames set forth in the Change Control Process. The CCP is used by BellSouth and the CLECs to manage requested changes to the BellSouth Local Interfaces.

The clock starts on the business rule documentation release date. The clock stops on the software release date. When project events occur (scope changes, analysis information, etc.), the software release date may change. Revisions to documentation could be required and the clock would restart.

## Calculation

**Change Management Documentation Delay Days** = (a - b)

- a = Date Documentation Provided
- b = Date Documentation Due

**Change Management Documentation Average Delay Days** = (c ÷ d)

- c = Sum of all CM Documentation Delay Days
- d = Total Change Management Documents Sent

## Report Structure

- BellSouth Aggregate

## Data Retained

- Report Period
- Notice Date
- Release Date

## SQM Disaggregation - Analog/Benchmark

| SQM Level of Disaggregation | SQM Analog/Benchmark |
|---|---|
| • Region | • ≤ 5 Days |

## SEEM Measure

| SEEM Measure | | |
|---|---|---|
| No | Tier I | |
| | Tier II | |

## SEEM Disaggregation - Analog/Benchmark

| SEEM Disaggregation | SEEM Analog/Benchmark |
|---|---|
| • Not Applicable | • Not Applicable |

# CM-5: Notification of CLEC Interface Outages

## Definition

Measures the time it takes BellSouth to notify the CLEC of an outage of an interface.

## Exclusions

None

## Business Rules

This measure is designed to notify the CLEC of interface outages within 15 minutes of BellSouth's verification that an outage has taken place. This metric will be expressed as a percentage.

## Calculation

**Notification of CLEC Interface Outages** = (a ÷ b) X 100

- a = Number of Interface Outages where CLECS are notified within 15 minutes
- b = Total Number of Interface Outages

## Report Structure

- CLEC Aggregate

## Data Retained

| Relating to CLEC Experience | Relating to BellSouth Performance |
|---|---|
| • Number of Interface Outages<br>• Number of Notifications ≤ 15 minutes | • Not Applicable |

## SQM Disaggregation - Analog/Benchmark

| SQM Level of Disaggregation | SQM Analog/Benchmark |
|---|---|
| • By interface type for all interfaces accessed by CLECs | • 97% ≤ 15 Minutes |

| Interface | Applicable to |
|---|---|
| EDI | CLEC |
| CSOTS | CLEC |
| LENS | CLEC |
| TAG | CLEC |
| ECTA | CLEC |
| TAFI | CLEC/BellSouth |

## SEEM Measure

| SEEM Measure | | |
|---|---|---|
| No | Tier I | |
| | Tier II | |

## SEEM Disaggregation - Analog/Benchmark

| SEEM Disaggregation | SEEM Analog/Benchmark |
|---|---|
| • Not Applicable | • Not Applicable |

# Appendix A: Reporting Scope

## A-1: Standard Service Groupings

See individual reports in the body of the SQM.

## A-2: Standard Service Order Activities

These are the generic BellSouth/CLEC service order activities which are included in the Pre-Ordering, Ordering, and Provisioning sections of this document. It is not meant to indicate specific reporting categories.

### Service Order Activity Types

- Service Migrations Without Changes
- Service Migrations With Changes
- Move and Change Activities
- Service Disconnects (Unless noted otherwise)
- New Service Installations

### Pre-Ordering Query Types

- Address
- Telephone Number
- Appointment Scheduling
- Customer Service Record
- Feature Availability
- Service Inquiry

### Maintenance Query Types

TAFI - TAFI queries the systems below

- CRIS
- March
- Predictor
- LMOS
  - DLR
  - DLETH
  - LMOSupd
- LNP
- NIW
- OSPCM
- SOCS

### Report Levels

- CLEC RESH
- CLEC State
- CLEC Region
- Aggregate CLEC State

- Aggregate CLEC Region
- BellSouth State
- BellSouth Region

# Appendix B: Glossary of Acronyms and Terms

## Symbols used in calculations

Σ A mathematical symbol representing the sum of a series of values following the symbol.

- A mathematical operator representing subtraction.

+ A mathematical operator representing addition.

÷ A mathematical operator representing division.

< A mathematical symbol that indicates the metric on the left of the symbol is less than the metric on the right.

≤ A mathematical symbol that indicates the metric on the left of the symbol is less than or equal to the metric on the right.

> A mathematical symbol that indicates the metric on the left of the symbol is greater than the metric on the right.

> A mathematical symbol that indicates the metric on the left of the symbol is greater than or equal to the metric on the right.

( ) Parentheses, used to group mathematical operations which are completed before operations outside the parentheses.

## A

**ACD:** Automatic Call Distributor - A service that provides status monitoring of agents in a call center and routes high volume incoming telephone calls to available agents while collecting management information on both callers and attendants.

**Aggregate:** Sum total of all items in like category, e.g. CLEC aggregate equals the sum total of all CLECs' data for a given reporting level.

**ALEC:** Alternative Local Exchange Company = FL CLEC

**ADSL:** Asymmetrical Digital Subscriber Line

**ASR:** Access Service Request - A request for access service terminating delivery of carrier traffic into a Local Exchange Carrier's network.

**ATLAS:** Application for Telephone Number Load Administration System - The BellSouth Operations System used to administer the pool of available telephone numbers and to reserve selected numbers from the pool for use on pending service requests/service orders.

**ATLASTN:** ATLAS software contract for Telephone Number.

**Auto Clarification:** The number of LSRs that were electronically rejected from LESOG and electronically returned to the CLEC for correction.

## B

**BFR:** Bona Fied Request

**BILLING:** The process and functions by which billing data is collected and by which account information is processed in order to render accurate and timely billing.

**BOCRIS:** Business Office Customer Record Information System (Front-end to the CRIS database.)

**BRI:** Basic Rate ISDN

**BRC:** Business Repair Center – The BellSouth Business Systems trouble receipt center which serves large business and CLEC customers.

**BellSouth :** BellSouth Telecommunications, Inc.

## C

**CABS:** Carrier Access Billing System

**CCC:** Coordinated Customer Conversions

**CCP:** Change Control Process

**Centrex:** A business telephone service, offered by local exchange carriers, which is similar to a Private Branch Exchange (PBX) but the switching equipment is located in the telephone company Central Office (CO).

**CKTID:** A unique identifier for elements combined in a service configuration

**CLEC:** Competitive Local Exchange Carrier

**CLP:** Competitive Local Provider = NC CLEC

**CM:** Change Management

**CMDS:** Centralized Message Distribution System - Telcordia administered national system used to transfer specially formatted messages among companies.

**COFFI:** Central Office Feature File Interface - Provides information about USOCs and class of service. COFFI is a part of DOE/ SONGS. It indicates all services available to a customer.

**CRIS:** Customer Record Information System - This system is used to retain customer information and render bills for telecommunications service.

**CRSACCTS:** CRIS software contract for CSR information

**CRSG:** Complex Resale Support Group

**C-SOTS:** CLEC Service Order Tracking System

**CSR:** Customer Service Record

**CTTG:** Common Transport Trunk Group - Final trunk groups between BellSouth & Independent end offices and the BellSouth access tandems.

## D

**DA:** Directory Assistance

**DESIGN:** Design Service is defined as any Special or Plain Old Telephone Service Order which requires BellSouth Design Engineering Activities.

**DISPOSITION & CAUSE:** Types of trouble conditions, e.g. No Trouble Found, Central Office Equipment, Customer Premises Equipment, etc.

**DLETH:** Display Lengthy Trouble History - A history report that gives all activity on a line record for trouble reports in LMOS.

**DLR:** Detail Line Record - A report that gives detailed line record information on records maintained in LMOS

**DS-0:** The worldwide standard speed for one digital voice signal (64000 bps).

**DS-1:** 24 DS-0s (1.544Mb/sec., i.e. carrier systems)

**DOE:** Direct Order Entry System - An internal BellSouth service order entry system used by BellSouth Service Representatives to input business service orders in BellSouth format.

**DSAP:** DOE (Direct Order Entry) Support Application - The BellSouth Operations System which assists a Service Representative or similar carrier agent in negotiating service provisioning commitments for non-designed services and Unbundled Network Elements.

**DSAPDDI:** DSAP software contract for schedule information.

**DSL:** Digital Subscriber Line

**DUI:** Database Update Information

## E

**E911:** Provides callers access to the applicable emergency services bureau by dialing a 3-digit universal telephone number.

**EDI:** Electronic Data Interchange - The computer-to-computer exchange of inter and/or intra-company business documents in a public standard format.

**ESSX:** BellSouth Centrex Service

## F G

**Fatal Reject:** The number of LSRs that were electronically rejected from LEO, which checks to see of the LSR has all the required fields correctly populated.

**Flow-Through:** In the context of this document, LSRs submitted electronically via the CLEC mechanized ordering process that flow through to the BellSouth OSS without manual or human intervention.

**FOC:** Firm Order Confirmation - A notification returned to the CLEC confirming that the LSR has been received and accepted, including the specified commitment date.

**FX:** Foreign Exchange

## H

**HAL:** "Hands Off" Assignment Logic - Front end access and error resolution logic used in interfacing BellSouth Operations Systems such as ATLAS, BOCRIS, LMOS, PSIMS, RSAG and SOCS.

**HALCRIS:** HAL software contract for CSR information

**HDSL:** High Density Subscriber Loop/Line

## I J K

**ILEC:** Incumbent Local Exchange Company

**INP:** Interim Number Portability

**ISDN:** Integrated Services Digital Network

**IPC:** Interconnection Purchasing Center

## L

**LAN:** Local Area Network

**LAUTO:** The automatic processor in the LNP Gateway that validates LSRs and issues service orders.

**LCSC:** Local Carrier Service Center - The BellSouth center which is dedicated to handling CLEC LSRs, ASRs, and Pre-ordering transactions along with associated expedite requests and escalations.

**Legacy System:** Term used to refer to BellSouth Operations Support Systems (see OSS)

**LENS:** Local Exchange Negotiation System - The BellSouth LAN/web server/OS application developed to provide both preordering and ordering electronic interface functions for CLECs.

**LEO:** Local Exchange Ordering - A BellSouth system which accepts the output of EDI, applies edit and formatting checks, and reformats the Local Service Requests in BellSouth Service Order format.

**LERG:** Local Exchange Routing Guide

**LESOG:** Local Exchange Service Order Generator - A BellSouth system which accepts the service order output of LEO and enters the Service Order into the Service Order Control System using terminal emulation technology.

**LFACS:** Loop Facilities Assessment and Control System

**LIDB:** Line Information Database

**LMOS:** Loop Maintenance Operations System - A system that provides a mechanized means of maintaining customer line records and for entering, processing, and tracking trouble reports.

**LMOS HOST:** LMOS host computer

**LMOSupd:** LMOS update allows trouble tickets on line records to be entered into LMOS.

**LMU:** Loop Make-up

**LMUS:** Loop Make-up Service Inquiry

**LNP:** Local Number Portability - In the context of this document, the capability for a subscriber to retain his current telephone number as he transfers to a different local service provider.

**LNP Gateway:** Local Number Portability (gateway)- A system that provides both internal and external communications with various interfaces and process including:

(1). Linking BellSouth to the Number Portability Administration Center (NPAC).

(2). Allowing for inter-company communications between BellSouth and the CLECs for electronic ordering.

(3). Providing interface between NPAC and AIN SMS for LNP routing processes.

**LOOPS :** Transmission paths from the central office to the customer premises.

**LRN:** Location Routing Number

**LSR:** Local Service Request – A request for local resale service or unbundled network elements from a CLEC.

## M

**Maintenance & Repair:** The process and function by which trouble reports are passed to BellSouth and by which the related service problems are resolved.

**MARCH:** A memory administration system that translates line-related service order data into switch provisioning messages and automatically transmits the messages to targeted stored program control system switches.

## N

**NBR:** New Business Request

**NC:** "No Circuits" - All circuits busy announcement.

**NIW:** Network Information Warehouse - A system that stores central office blockage data for use in processing trouble reports.

**NMLI:** Native Mode LAN Interconnection

**NPA:** Numbering Plan Area

**NXX:** The "exchange" portion of a telephone number.

## O

**OASIS:** Obtain Availability Services Information System - A BellSouth front-end processor, which acts as an interface between COFFI and RNS. This system takes the USOCs in COFFI and translates them to English for display in RNS.

**OASISBSN:** OASIS software contract for feature/service

**OASISCAR:** OASIS software contract for feature/service

**OASISLPC:** OASIS software contract for feature/service

**OASISMTN:** OASIS software contract for feature/service

**OASISNET:** OASIS software contract for feature/service

**OASISOCP:** OASIS software contract for feature/service

**ORDERING:** The process and functions by which resale services or unbundled network elements are ordered from BellSouth as well as the process by which an LSR or ASR is placed with BellSouth.

**Order Types:** The following order types are used in this document:

(1). T - The "to" portion of a change of address. This Order Type is used to connect main service at a new address when a customer moves from one address to another in any of the nine states within the BellSouth region. A "T" Order Type is always pared with an "F" Order Type which will have the same telephone number following the "F" Order Type Code unless the orders are within different states.

(2). N - Orders establishing a new account. Also, this Order Type Code is occasionally used when changing from one type of system to another such as when changing from PBX to Centrex.

(3). C - Order Type used for the following conditions: changes or partial connections or disconnections of service or equipment; change of telephone number, grade or class of main line, additional lines, auxiliary lines, PBX trunks and stations; addition of trunks or lines to existing accounts; move of equipment (other than change of address); temporary suspension and restoration of service at customer's request.

(4). R - Order Type used for the following conditions: additions, removals or changes in directory listings; responsibility change orders, addition, removal or changes in directory and billing information; other record corrections where no "field work" is involved.

**OSPCM:** Outside Plant Contract Management System - A system that provides scheduling and completion information on outside plant construction activities.

**OSS:** Operations Support System - A support system or database which is used to mechanize the flow or performance of work. The term is used to refer to the overall system consisting of hardware complex, computer operating system(s), and application which is used to provide the support functions.

**OUT OF SERVICE:** Customer has no dial tone and cannot call out.

## P Q

**PMAP:** Performance Measurement Analysis Platform

**PON:** Purchase Order Number

**POTS:** Plain Old Telephone Service

**PREDICTOR:** A system which is used to administer proactive maintenance and rehabilitation activities on outside plant facilities, provide access to selected work groups to Mechanized Loop Testing and switching system I/O ports.

**Preordering:** The process and functions by which vital information is obtained, verified, or validated prior to placing a service request.

**PRI:** Primary Rate ISDN

**Provisioning:** The process and functions by which necessary work is performed to activate a service requested via an LSR or ASR and to initiate the proper billing and accounting functions.

**PSIMS:** Product/Service Inventory Management System - A BellSouth database Operations System which contains availability information on switching system features and capabilities and on BellSouth service availability. This database is used to verify the availability of a feature or service in an NXX prior to making a commitment to the customer.

**PSIMSORB:** PSIMS software contract for feature/service.

## R

**RNS:** Regional Negotiation System - An internal BellSouth service order entry system used by BellSouth Consumer Services to input service orders in BellSouth format.

**ROS:** Regional Ordering System

**RRC:** Residence Repair Center - The BellSouth Consumer Services trouble receipt center which serves residential customers.

**RSAG:** Regional Street Address Guide - The BellSouth database, which contains street addresses validated to be accurate with state and local governments.

**RSAGADDR:** RSAG software contract for address search.

**RSAGTN:** RSAG software contract for telephone number search.

## S

**SAC:** Service Advocacy Center

**SEEM:** Self Effectuating Enforcement Mechanism

**SOCS:** Service Order Control System - A system which routes service order images among BellSouth drop points and BellSouth OSS during the service provisioning process.

**SOIR:** Service Order Interface Record - any change effecting activity to a customer account by service order that impacts 911/E911

**SONGS:** Service Order Negotiation and Generation System.

**Syntactically Incorrect Query:** A query that cannot be fulfilled due to insufficient or incorrect input data from the end user. For example, A CLEC would like to query the legacy system for the following address: 1234 Main ST. Entering "1234 Main ST" will be considered syntactically correct because valid characters were used in the address field. However, entering "AB34 Main ST" will be considered syntactically incorrect because invalid characters (i.e., alpha characters were entered in numeric slots) were used in the address field.

## T

**TAFI:** Trouble Analysis Facilitation Interface - The BellSouth Operations System that supports trouble receipt center personnel in taking and handling customer trouble reports.

**TAG:** Telecommunications Access Gateway – TAG was designed to provide an electronic interface, or machine-to-machine interface for the bi-directional flow of information between BellSouth's OSSs and participating CLECs.

**TN:** Telephone Number

**Total Manual Fallout:** The number of LSRs which are entered electronically but require manual entering into a service order generator.

## U V

**UNE:** Unbundled Network Element

**UCL:** Unbundled Copper Link

**USOC:** Universal Service Order Code

## W X Y Z

**WATS:** Wide Area Telephone Service

**WFA:** Work Force Administration

**WMC:** Work Management Center

**WTN:** Working Telephone Number.

# Appendix C: BellSouth Audit Policy

## C-1: BellSouth's Internal Audit Policy

BellSouth's internal efforts to make certain that the reports produced by the PMAP platform are of the highest accuracy has been formalized into a Performance Measurements Quality Assurance Plan (PMQAP) that documents and augments existing quality assurance processes integral to the production and validation of Performance Measurements data.

The plan consists of three sections:

1. Change Control addresses the quality assurance steps involved in the introduction of new measurements and changes to existing measurements.
2. Production addresses the quality assurance steps used to create monthly SQM reports.
3. Monthly Validation addresses the quality assurance steps used to ensure accurate posting of monthly results.

The BellSouth PMQAP will ensure that BellSouth effectively and consistently provides accurate performance measurements data for the activities included in the SQM. The BellSouth Internal Audit department will audit this plan and its quality assurance steps annually, beginning in 4Q01.

## C-2: BellSouth's External Audit Policy

BellSouth currently provides many CLECs with audit rights as a part of their individual interconnection agreements. BellSouth has developed a proposed Audit Plan for use by the parties to an audit. If requested by a Public Service Commission or by a CLEC exercising contractual audit rights, BellSouth will agree to undergo a comprehensive audit of the current year aggregate level reports for both BellSouth and the CLECs for each of the next five (5) years (2001 - 2005), to be conducted by an independent third party auditor jointly selected by BellSouth and the CLEC. The results of audits will be made available to all the parties subject to proper safeguards to protect proprietary information. Requested audits include the following specifications:

1. The cost shall be borne by BellSouth.
2. The independent third party auditor shall be selected with input from BellSouth, the PSC, if applicable, and the CLEC(s).
3. BellSouth, the PSC and the CLECs shall jointly determine the scope of the audit.

These comprehensive audits are intended to provide the basis for the PSCs and CLECs to determine that the SQM and PMAP produce accurate data that reflects each States Order for performance measurements. Once this has been verified by an initial audit, the BellSouth PMQAP will provide the basis for future audits.

# Attachment 10

# BellSouth Disaster Recovery Plan

**CONTENTS**

**PAGE**


| | | |
|---|---|---|
| 1.0 | Purpose | 2 |
| 2.0 | Single Point of Contact | 2 |
| 3.0 | Identifying the Problem | 2 |
| | 3.1 Site Control | 3 |
| | 3.2 Environmental Concerns | 4 |
| 4.0 | The Emergency Control Center (ECC) | 4 |
| 5.0 | Recovery Procedures | 5 |
| | 5.1 CLEC Outage | 5 |
| | 5.2 BellSouth Outage | 5 |
| | 5.2.1 Loss of Central Office | 6 |
| | 5.2.2 Loss of a Central Office with Serving Wire Center Functions | 6 |
| | 5.2.3 Loss of a Central Office with Tandem Functions | 6 |
| | 5.2.4 Loss of a Facility Hub | 7 |
| | 5.3 Combined Outage (CLEC and BellSouth Equipment) | 7 |
| 6.0 | T1 Identification Procedures | 7 |
| 7.0 | Acronyms | 8 |

## 1.0 PURPOSE

In the unlikely event of a disaster occurring that affects BellSouth's long-term ability to deliver traffic to a Competitive Local Exchange Carrier (CLEC), general procedures have been developed by BellSouth to hasten the recovery process in accordance with the Telecommunications Service Priority (TSP) Program established by the Federal Communications Commission to identify and prioritize telecommunication services that support national security or emergency preparedness (NS/EP) missions. Since each location is different and could be affected by an assortment of potential problems, a detailed recovery plan is impractical. However, in the process of reviewing recovery activities for specific locations, some basic procedures emerge that appear to be common in most cases.

These general procedures should apply to any disaster that affects the delivery of traffic for an extended time period. Each CLEC will be given the same consideration during an outage, and service will be restored as quickly as possible.

This document will cover the basic recovery procedures that would apply to every CLEC.

## 2.0 SINGLE POINT OF CONTACT

When a problem is experienced, regardless of the severity, the BellSouth Network Management Center (NMC) will observe traffic anomalies and begin monitoring the situation. Controls will be appropriately applied to insure the sanity of BellSouth's network; and, in the event that a switch or facility node is lost, the NMC will attempt to circumvent the failure using available reroutes.

BellSouth's NMC will remain in control of the restoration efforts until the problem has been identified as being a long-term outage. At that time, the NMC will contact BellSouth's Emergency Control Center (ECC) and relinquish control of the recovery efforts. Even though the ECC may take charge of the situation, the NMC will continue to monitor the circumstances and restore traffic as soon as damaged network elements are revitalized.

**The telephone number for the BellSouth Network Management Center in Atlanta, as published in Telcordia's National Network Management Directory, is 404-321-2516.**

## 3.0 IDENTIFYING THE PROBLEM

During the early stages of problem detection, the NMC will be able to tell which CLECs are affected by the catastrophe. Further analysis and/or first hand observation will determine if the disaster has affected CLEC equipment only, BellSouth equipment only or a combination. The initial restoration activity will be largely determined by the equipment that is affected.

Once the nature of the disaster is determined and after verifying the cause of the problem, the NMC will initiate reroutes and/or transfers that are jointly agreed upon by the affected CLECs' Network Management Center and the BellSouth NMC. The type and percentage of controls used will depend upon available network capacity. Controls necessary to stabilize the situation will be invoked and the NMC will attempt to re-establish as much traffic as possible.

For long-term outages, recovery efforts will be coordinated by the Emergency Control Center (ECC). Traffic controls will continue to be applied by the NMC until facilities are re-established. As equipment is made available for service, the ECC will instruct the NMC to begin removing the controls and allow traffic to resume.

## 3.1 SITE CONTROL

In the total loss of building use scenario, what likely exists will be a smoking pile of rubble. This rubble will contain many components that could be dangerous. It could also contain any personnel on the premises at the time of the disaster. For these reasons, the local fire marshal with the assistance of the police will control the site until the building is no longer a threat to surrounding properties and the companies have secured the site from the general public.

During this time, the majority owner of the building should be arranging for a demolition contractor to mobilize to the site with the primary objective of reaching the cable entrance facility for a damage assessment. The results of this assessment would then dictate immediate plans for restoration, both short term and permanent.

In a less catastrophic event, i.e., the building is still standing and the cable entrance facility is usable, the situation is more complex. The site will initially be controlled by local authorities until the threat to adjacent property has diminished. Once the site is returned to the control of the companies, the following events should occur.

An initial assessment of the main building infrastructure systems (mechanical, electrical, fire and life safety, elevators, and others) will establish building needs. Once these needs are determined, the majority owner should lead the building restoration efforts. There may be situations where the site will not be totally restored within the confines of the building. The companies must individually determine their needs and jointly assess the cost of permanent restoration to determine the overall plan of action.

Multiple restoration trailers from each company will result in the need for designated space and installation order. This layout and control is required to maximize the amount of restoration equipment that can be placed at the site, and the priority of placements.

Care must be taken in this planning to ensure other restoration efforts have logistical access to the building. Major components of telephone and building equipment will need to be removed and replaced. A priority for this equipment must also be jointly established to facilitate overall site restoration. (Example: If the AC switchgear has sustained damage, this would be of the highest priority in order to regain power, lighting, and HVAC throughout the building.)

If the site will not accommodate the required restoration equipment, the companies would then need to quickly arrange with local authorities for street closures, rights of way or other possible options available.

## 3.2 ENVIRONMENTAL CONCERNS

In the worse case scenario, many environmental concerns must be addressed. Along with the police and fire marshal, the state environmental protection department will be on site to monitor the situation.

Items to be concerned with in a large central office building could include:

1. Emergency engine fuel supply. Damage to the standby equipment and the fuel handling equipment could have created "spill" conditions that have to be handled within state and federal regulations.

2. Asbestos-containing materials that may be spread throughout the wreckage. Asbestos could be in many components of building, electrical, mechanical, outside plant distribution, and telephone systems.

3. Lead and acid. These materials could be present in potentially large quantities depending upon the extent of damage to the power room.

4. Mercury and other regulated compounds resident in telephone equipment.

5. Other compounds produced by the fire or heat.

Once a total loss event occurs at a large site, local authorities will control immediate clean up (water placed on the wreckage by the fire department) and site access.

At some point, the companies will become involved with local authorities in the overall planning associated with site clean up and restoration. Depending on the clean up approach taken, delays in the restoration of several hours to several days may occur.

In a less severe disaster, items listed above are more defined and can be addressed individually depending on the damage.

In each case, the majority owner should coordinate building and environmental restoration as well as maintain proper planning and site control.

# 4.0 THE EMERGENCY CONTROL CENTER (ECC)

The ECC is located in the Midtown 1 Building in Atlanta, Georgia. During an emergency, the ECC staff will convene a group of pre-selected experts to inventory the damage and initiate corrective actions. These experts have regional access to BellSouth's personnel and equipment and will assume control of the restoration activity anywhere in the nine-state area.

In the past, the ECC has been involved with restoration activities resulting from hurricanes, ice storms and floods. They have demonstrated their capabilities during these calamities as well as

during outages caused by human error or equipment failures. This group has an excellent record of restoring service as quickly as possible.

During a major disaster, the ECC may move emergency equipment to the affected location, direct recovery efforts of local personnel and coordinate service restoration activities with the CLECs. The ECC will attempt to restore service as quickly as possible using whatever means is available, leaving permanent solutions, such as the replacement of damaged buildings or equipment, for local personnel to administer.

Part of the ECC's responsibility, after temporary equipment is in place, is to support the NMC efforts to return service to the CLECs. Once service has been restored, the ECC will return control of the network to normal operational organizations. Any long-term changes required after service is restored will be made in an orderly fashion and will be conducted as normal activity.

## 5.0 RECOVERY PROCEDURES

The nature and severity of any disaster will influence the recovery procedures. One crucial factor in determining how BellSouth will proceed with restoration is whether or not BellSouth's equipment is incapacitated. Regardless of whose equipment is out of service, BellSouth will move as quickly as possible to aid with service recovery; however, the approach that will be taken may differ depending upon the location of the problem.

## 5.1 CLEC OUTAGE

For a problem limited to one CLEC (or a building with multiple CLECs), BellSouth has several options available for restoring service quickly. For those CLECs that have agreements with other CLECs, BellSouth can immediately start directing traffic to a provisional CLEC for completion. This alternative is dependent upon BellSouth having concurrence from the affected CLECs.

Whether or not the affected CLECs have requested a traffic transfer to another CLEC will not impact BellSouth's resolve to re-establish traffic to the original destination as quickly as possible.

## 5.2 BELLSOUTH OUTAGE

Because BellSouth's equipment has varying degrees of impact on the service provided to the CLECs, restoring service from damaged BellSouth equipment is different. The outage will probably impact a number of Carriers simultaneously. However, the ECC will be able to initiate immediate actions to correct the problem.

A disaster involving any of BellSouth's equipment locations could impact the CLECs, some more than others. A disaster at a Central Office (CO) would only impact the delivery of traffic to and from that one location, but the incident could affect many Carriers. If the Central Office is a Serving Wire Center (SWC), then traffic from the entire area to those Carriers served from that switch would also be impacted. If the switch functions as an Access Tandem, or there is a tandem in the building, traffic from every CO to every CLEC could be interrupted. A disaster that destroys a facility hub could disrupt various traffic flows, even though the switching equipment may be unaffected.

The NMC would be the first group to observe a problem involving BellSouth's equipment. Shortly after a disaster, the NMC will begin applying controls and finding re-routes for the

completion of as much traffic as possible. These reroutes may involve delivering traffic to alternate Carriers upon receiving approval from the CLECs involved. In some cases, changes in translations will be required. If the outage is caused by the destruction of equipment, then the ECC will assume control of the restoration.

### 5.2.1 Loss of a Central Office

When BellSouth loses a Central Office, the ECC will

a) Place specialists and emergency equipment on notice;

b) Inventory the damage to determine what equipment and/or functions are lost;

c) Move containerized emergency equipment and facility equipment to the stricken area, if necessary;

d) Begin reconnecting service on a parity basis for Hospitals, Police and other emergency agencies or End Users served by BellSouth or CLEC in accordance with the TSP priority restoration coding scheme entered in the BellSouth Maintenance database immediately prior to the emergency.

### 5.2.2 Loss of a Central Office with Serving Wire Center Functions

The loss of a Central Office that also serves as a Serving Wire Center (SWC) will be restored as described in Section 5.2.1.

### 5.2.3 Loss of a Central Office with Tandem Functions

When BellSouth loses a Central Office building that serves as an Access Tandem and as a SWC, the ECC will

a) Place specialists and emergency equipment on notice;

b) Inventory the damage to determine what equipment and/or functions are lost;

c) Move containerized emergency equipment and facility equipment to the stricken area, if necessary;

d) Begin reconnecting service on a parity basis for Hospitals, Police and other emergency agencies or End Users served by BellSouth or CLEC in accordance with the TSP priority restoration coding scheme entered in the BellSouth Maintenance database immediately prior to the emergency;

e) Re-direct as much traffic as possible to the alternate access tandem (if available) for delivery to those CLECs utilizing a different location as a SWC;

f) Begin aggregating traffic to a location near the damaged building. From this location, begin re-establishing trunk groups to the CLECs for the delivery of traffic normally found on the direct trunk groups. (This aggregation point may be the alternate access tandem location or another CO on a primary facility route.)

### 5.2.4 Loss of a Facility Hub

In the event that BellSouth loses a facility hub, the recovery process is much the same as above. Once the NMC has observed the problem and administered the appropriate controls, the ECC will assume authority for the repairs. The recovery effort will include

a) Placing specialists and emergency equipment on notice;

b) Inventorying the damage to determine what equipment and/or functions are lost;

c) Moving containerized emergency equipment to the stricken area, if necessary;

d) Reconnecting service on a parity basis for Hospitals, Police and other emergency agencies or End Users served by BellSouth or CLEC in accordance with the TSP priority restoration coding scheme entered in the BellSouth Maintenance database immediately prior to the emergency; and

e) If necessary, BellSouth will aggregate the traffic at another location and build temporary facilities. This alternative would be viable for a location that is destroyed and building repairs are required.

## 5.3 COMBINED OUTAGE (CLEC AND BELLSOUTH EQUIPMENT)

In some instances, a disaster may impact BellSouth's equipment as well as the CLECs'. This situation will be handled in much the same way as described in Section 5.2.3. Since BellSouth and the CLECs will be utilizing temporary equipment, close coordination will be required.

## 6.0 T1 IDENTIFICATION PROCEDURES

During the restoration of service after a disaster, BellSouth may be forced to aggregate traffic for delivery to a CLEC. During this process, T1 traffic may be consolidated onto DS3s and may become unidentifiable to the Carrier. Because resources will be limited, BellSouth may be forced to "package" this traffic entirely differently than normally received by the CLECs. Therefore, a method for identifying the T1 traffic on the DS3s and providing the information to the Carriers is required.

## 7.0 ACRONYMS

| | | |
|---|---|---|
| CLEC | - | Competitive Local Exchange Carrier |
| CO | - | Central Office (BellSouth) |
| DS3 | - | Facility that carries 28 T1s (672 circuits) |
| ECC | - | Emergency Control Center (BellSouth) |
| NMC | - | Network Management Center |
| SWC | - | Serving Wire Center (BellSouth switch) |
| T1 | - | Facility that carries 24 circuits |
| TSP | - | Telecommunications Service Priority |

## Hurricane Information

During a hurricane, BellSouth will make every effort to keep CLECs updated on the status of our network. Information centers will be set up throughout BellSouth Telecommunications. These centers are not intended to be used for escalations, but rather to keep the CLEC informed of network related issues, area damages and dispatch conditions, etc.

Hurricane-related information can also be found on line at http://www.interconnection.bellsouth.com/network/disaster/dis_resp.htm. Information concerning Mechanized Disaster Reports can also be found at this website by clicking on CURRENT MDR REPORTS or by going directly to http://www.interconnection.bellsouth.com/network/disaster/mdrs.htm.

## BST Disaster Management Plan

BellSouth maintenance centers have geographical and redundant communication capabilities. In the event of a disaster removing any maintenance center from service another geographical center would assume maintenance responsibilities. The contact numbers will not change and the transfer will be transparent to the CLEC.

# Attachment 11

## Bona Fide Request and New Business Request Process

# BONA FIDE REQUEST AND NEW BUSINESS REQUEST PROCESS

## 1.0 BONA FIDE REQUEST

1.1 The Parties agree that Level 3 is entitled to order any network element, interconnection option, or service option required to be made available by FCC or Commission requirements pursuant to the Act. Subject to Section 1.1.1 and 1.1.2 below, a Bona Fide Request (BFR) is to be used when Level 3 makes a request of BellSouth to provide a new or modified network element, interconnection option or other service option pursuant to the Act that was not previously provided for in this Agreement.

1.1.1 BFR Not Required. Where the FCC or Commission, in a generic order, has required or shall require BellSouth to offer a network element, interconnection option, or service option not covered in this Agreement, BellSouth shall offer to Level 3 said network element, interconnection option, or service option in the same fashion as required by the generic proceeding. If BellSouth provides any network element, interconnection option, or service option, that is not identified in this Agreement to itself, to any BellSouth affiliate, or to any telecommunications carrier (including Level 3), BellSouth shall make available to Level 3, upon Level 3's request, and without submission of a BFR the same network element, interconnection option, or service option.

1.1.2 To the extent possible, BellSouth will utilize information from previously developed BFRs to address similar arrangements in order to shorten the response times for the currently requested BFR and to decrease the costs for the currently requested BFR.

1.2 A BFR shall be submitted in writing by Level 3 and shall specifically identify the requested service date, technical requirements, space requirements and/or such other specifications that clearly define the request such that BellSouth has sufficient information to analyze and prepare a response. Such a request shall also include Level 3's designation of the request as being pursuant to the Telecommunications Act of 1996 (*i.e.*, a BFR). The request shall be sent to Level 3's designated BellSouth sales contact or Local Contract Manager. For purposes of this Section, an "identical" request shall be one that is materially identical to a previous request with respect to the information provided

1.3 Within two (2) business days of receipt of a BFR, BellSouth shall acknowledge in writing its receipt and identify a single point of contact

responsible for responding to the BFR and shall request any additional information needed to process the request to the extent known at that time. BellSouth agrees to confer with Level 3 to discuss the BFR to ensure that (i) BellSouth properly understands Level 3's BFR and (ii) inform Level 3 of the existence of any similar BFRs made by other parties. BellSouth agrees to confer with Level 3 to discuss the BFR to ensure that BellSouth properly understands Level 3's BFR. Notwithstanding the foregoing, BellSouth may reasonably request additional information from Level 3 at any time during the processing of the BFR.

1.4 Within thirty (30) business days of BellSouth's receipt of the BFR, if preliminary analysis of the requested BFR is not of such complexity that it will cause BellSouth to expend extraordinary resources to evaluate the BFR, BellSouth shall respond to Level 3 by providing a preliminary analysis of the new or modified network element or interconnection option not ordered by the FCC or Commission that is the subject of the BFR. The preliminary analysis shall either confirm that BellSouth will offer access to the new or modified network element, interconnection option or service option or confirm that BellSouth will not offer the new or modified network element, interconnection option or service option.

1.5 If the preliminary analysis states that BellSouth will offer the new or modified network element, interconnection option or service option, the preliminary analysis will include an estimate of the costs of utilizing existing resources, both personnel and systems, in the development including, but not limited to, request parameters analysis, determination of impacted BellSouth departments, determination of required resources, project management resources, etc. (Development Rate) including a general breakdown of such costs associated with the network element, interconnection option or service option and the date the request can be met. If the preliminary analysis states that BellSouth will not offer the new or modified network element, interconnection option or service option, BellSouth will provide an explanation of why the request is not technically feasible, does not qualify as a BFR for the new or modified network element, interconnection option or service option, should actually be submitted as a NBR or is otherwise not required to be provided under the Act. If BellSouth cannot provide the network element, interconnection option or service option by the requested date, BellSouth shall provide an alternative proposed date together with a detailed explanation as to why BellSouth is not able to meet Level 3's requested date.

1.6 If BellSouth determines that the preliminary analysis of the requested BFR is of such complexity that it will cause BellSouth to expend extraordinary resources to evaluate the BFR, BellSouth shall notify Level 3 within ten (10) business days of BellSouth's receipt of BFR that a fee will be required prior to the preliminary evaluation of the BFR. Such fee shall be

limited to BellSouth's extraordinary expenses directly related to the complex request that require the allocation and engagement of additional resources above the existing allocated resources used on BFR/NBR cost development which include, but are not limited to, expenditure of funds to develop feasibility studies, specific resources that are required to determine request requirements (such as operation support system analysts, technical managers, software developers), software impact analysis by specific software developers; software architecture development, hardware impact analysis by specific system analysts, etc. and the request for such fee shall be accompanied with a general breakdown of such costs. If Level 3 accepts the complex request evaluation fee proposed by BellSouth, Level 3 shall submit such fee within thirty (30) business days of BellSouth's notice that a complex request evaluation fee is required. Within thirty (30) business days of BellSouth's receipt of the complex request evaluation fee, BellSouth shall respond to Level 3 by providing a preliminary analysis, consistent with Section 1.4 of this Attachment 11.

1.7 Level 3 may cancel a BFR at any time. If Level 3 cancels the request within ten (10) business days after submitting the BFR request, no charges will be incurred. If Level 3 cancels the BFR within thirty (30) business days after receipt of BellSouth's preliminary analysis, BellSouth shall be entitled to keep any complex request evaluation fee submitted in accordance with Section 1.6 above, minus those costs included in the fee that have not been incurred as of the date of cancellation.

1.8 Level 3 will have thirty (30) business days from receipt of preliminary analysis to accept the preliminary analysis or cancel the BFR. If Level 3 fails to respond within this thirty (30) business day period, the BFR will be deemed cancelled.

1.8.1 Acceptance of the preliminary analysis must be in writing and accompanied by the estimated Development Rate for the new or modified network element, interconnection option or service option quoted in the preliminary analysis.

1.9 BellSouth shall propose a firm price quote, including the firm Development Rate, the firm nonrecurring rate and the firm recurring rate, and a detailed implementation plan within ten (10) business days of receipt of Level 3's accurate BFR application for a network element, interconnection option or service option within thirty (30) business days of receipt of Level 3's accurate BFR application for a new or modified network element, interconnection option or service option ordered by the FCC or Commission; and within sixty (60) business days of receipt of Level 3's accurate BFR application for a new or modified network element, interconnection option or service option not ordered by the FCC

or Commission or not operational at the time of the request. The firm nonrecurring rate will not include any of the Development Rate or the complex request evaluation fee, if required, in the calculation of this rate. Such firm price quote shall not exceed the estimate provided with the preliminary analysis by more than 25%.

1.10 Level 3 shall have thirty (30) business days from receipt of the firm price quote to accept or deny the firm price quote and submit any additional Development or nonrecurring rates quoted in the firm price quote. If the firm price quote is less than the preliminary analysis' estimated Development Rate and/or nonrecurring rate BellSouth will credit Level 3's account for the difference.

Payment of the charges specified in this Attachment shall not be construed by BellSouth as a waiver of Level 3's right to invoke the dispute resolution provisions set forth in the General Terms and Conditions of this Agreement as to any issue, including BellSouth's proposed price, the reasonable, demonstrable, and actual costs incurred in the event of Level 3's cancellation of a BFR, or the amount of nonrecurring charges paid.

1.11 Unless Level 3 agrees otherwise, all prices shall be consistent with the applicable pricing principles and provisions of the Act and rules, orders and regulations of the FCC and/or the Commission.

1.12 If Level 3 believes that BellSouth's firm price quote is not consistent with the requirements of the Act, either Party may seek dispute resolution in accordance with the dispute resolution provisions set forth in the General Terms and Conditions of this Agreement. Any such arbitration applicable to network element, interconnection option and/or service option pricing shall be conducted in accordance with standards prescribed in Sections 251 and 252 of the Act. While the dispute is pending, Level 3 shall have the option of requesting BellSouth to provide the network element, interconnection option or service option subject to a retroactive pricing true up upon an effective Commission order resolving the dispute. The Parties agree that subsequent true-ups may result from multiple rounds of appellate or reconsideration decisions, should the relevant Party pursue such appeals/reconsiderations/review and prevail. BellSouth will provide a cost study upon request after the firm quote.

1.13 If either Party believes that the other is not acting in good faith in requesting, negotiating, processing or implementing the BFR, either Party may seek to resolve the dispute pursuant to the dispute resolution provisions set forth in the General Terms and Conditions of this Agreement.

1.14 Upon completion of the BFR, the Parties shall negotiate in good faith an amendment to this Agreement.

2.0 **NEW BUSINESS REQUEST**

2.1 Level 3 also shall be permitted to request the development of new or revised facilities or service options which are not required by the Act. Procedures applicable to requesting the addition of such elements, services and options are specified in this Attachment 11. A New Business Request (NBR) is to be used by Level 3 to make a request of BellSouth for a new or modified feature or capability of an existing product or service, a new product or service that is not deployed within the BellSouth network or operations and business support systems, or a new or modified service option that was not previously included in this Agreement (Requested NBR Services) and is not required by the Act.

2.2 An NBR shall be submitted in writing by Level 3 and shall specifically identify the requested service date, technical requirements, space requirements and/or such specifications that clearly define the request such that BellSouth has sufficient information to analyze and prepare a response. The request shall be sent to Level 3's designated BellSouth sales contact or Local Contract Manager.

2.3 Within two (2) business days of receipt of an NBR, BellSouth shall acknowledge in writing its receipt and identify a single point of contact responsible for responding to the NBR and shall request any additional information needed to process the request to the extent known at that time. Notwithstanding the foregoing, BellSouth may reasonably request additional information from Level 3 at any time during the processing of the NBR.

2.4 If the preliminary analysis of the requested NBR is not of such complexity that it will cause BellSouth to expend extraordinary resources to evaluate the NBR, within thirty (30) business days of its receipt of the NBR, BellSouth shall respond to Level 3 by providing a preliminary analysis of such Requested NBR Services that are the subject of the NBR. The preliminary analysis shall either confirm that BellSouth will offer access to the Requested NBR Services or confirm that BellSouth will not offer the Requested NBR Services.

2.4.1 If the preliminary analysis states that BellSouth will offer the Requested NBR Services, the preliminary analysis will include an estimate of the Development Rate including a general breakdown of costs and the date the request can be met. If BellSouth cannot provide the Requested NBR Service by the requested date, it shall provide an alternative proposed date together with a detailed explanation as to why BellSouth is not able to

meet Level 3's requested date. If the preliminary analysis states that BellSouth will not offer the Requested NBR Services, BellSouth will provide an explanation of why the request is not technically feasible or does not qualify as an NBR for the Requested NBR Services.

2.5 If BellSouth determines that the preliminary analysis of the requested NBR is of such complexity that it will cause BellSouth to expend extraordinary resources to evaluate the NBR, BellSouth shall notify Level 3 within ten (10) business days of BellSouth's receipt of the NBR that a complex request evaluation fee will be required prior to the evaluation of the NBR. Such fee shall be limited to BellSouth's extraordinary expenses directly related to the complex request. If Level 3 accepts the complex request evaluation fee amount proposed by BellSouth, Level 3 shall submit such complex request evaluation fee within thirty (30) business days of BellSouth's notice that a complex request evaluation fee is required.

2.6 Within thirty (30) business days of BellSouth's receipt of the complex request evaluation fee, BellSouth shall respond to Level 3 by providing a preliminary analysis of such Requested NBR Services that are the subject of the NBR.

2.7 Level 3 may cancel an NBR at any time. If Level 3 cancels the NBR within ten (10) business days after submitting the NBR, no charges will be incurred. If Level 3 cancels the NBR within thirty (30) business days after receipt of BellSouth's preliminary analysis, BellSouth shall be entitled to keep any complex request evaluation fee submitted in accordance with Section 2.6, minus those costs included in the fee that have not been incurred as of the date of cancellation.

2.8 Level 3 will have thirty (30) business days from receipt of preliminary analysis to accept the preliminary analysis or cancel the NBR. If Level 3 fails to respond within this thirty (30) business day period, the NBR will be deemed cancelled.

2.8.1 Acceptance of the preliminary analysis must be in writing and accompanied by the estimated Development Rate for the Requested NBR Services quoted in the preliminary analysis.

2.9 BellSouth shall propose a firm price quote including the firm Development Rate, the firm nonrecurring rate, and the firm recurring rate and a detailed implementation plan within ten (10) business days of receipt of Level 3's accurate NBR application for a Requested NBR Service that is operational at the time of the request and within sixty (60) business days of receipt of Level 3's accurate NBR application for the Requested NBR Services not operational at the time of the request. The

firm nonrecurring rate will not include any of the Development Rate or the complex request evaluation fee, if required, in the calculation of this rate. Such firm price quote shall not exceed the estimate provided with the preliminary analysis by more than 25%.

2.10 Level 3 shall have thirty (30) business days from receipt of firm price quote to accept or deny the firm price quote and submit any additional nonrecurring, non-refundable fees quoted in the firm price quote. If the firm price quote is less than the preliminary analysis' estimate of the Development Rate, BellSouth will credit Level 3's account for the difference.

2.11 Unless Level 3 agrees otherwise, all prices shall be consistent with the applicable pricing principles and provisions of the Act and rules, orders and regulations of the FCC and/or the Commission.

2.12 If either Party believes that the other is not acting in good faith in requesting, negotiating, processing or implementing the NBR, either Party may seek to resolve the dispute pursuant to the dispute resolution provisions set forth in the General Terms and Conditions of this Agreement.

2.13 Upon agreement to the rates, terms and conditions of a NBR, an amendment to this Agreement, or a separate agreement, may be required and the Parties shall negotiate such agreement or amendment in good faith.

**AMENDMENT**
**TO THE**
**AGREEMENT BETWEEN**
**LEVEL 3 COMMUNICATIONS, LLC**
**AND**
**BELLSOUTH TELECOMMUNICATIONS, INC.**
**EFFECTIVE JUNE 23, 2004**

Pursuant to this Amendment, (the "Amendment") Level 3 Communications, LLC ("Level 3") and BellSouth Telecommunications, Inc. ("BellSouth"), hereinafter referred to collectively as the "Parties", hereby agree to certain rates to be agreed to under the Interconnection Agreement dated June 23, 2004 ("Agreement") to be effective upon the date of the last signature executing the Amendment.

WHEREAS, BellSouth and Level 3 entered into the Agreement with an effective date June 23, 2004, and;

NOW THEREFORE, in consideration of the mutual provisions contained herein and other good and valuable consideration, the receipt and sufficiency of which are hereby acknowledged, the Parties hereby covenant and agree as follows:

1. Attachment 3, Exhibit A, Rates to the Agreement are hereby deleted in its entirety and replaced with a new Attachment 3, Exhibit A, Rates, as set forth in Exhibit 1 attached hereto and incorporated herein by this reference.

2. The parties agree these rates are to be effective June 23, 2004.

3. All of the other provisions of the Agreement, effective June 23, 2004, shall remain in full force and effect.

4. Either or both of the Parties are authorized to submit this Amendment to the respective state regulatory authorities for approval subject to Section 252(e) of the Communications Act of 1934 as amended by the Federal Telecommunications Act of 1996.

IN WITNESS WHEREOF, the Parties have executed this Agreement the day and year written below.

| **BellSouth Telecommunications, Inc.** | **Level 3 Communications, L.L.C.** |
|---|---|
| By: Kristen E Rowe | By: Charles P. Keesee II |
| Name: Kristen E. Rowe | Name: Lc Charles P. Keesee II |
| Title: Director | Title: Vice President |
| Date: 7/14/04 | Date: July 13, 2004 |

| LOCAL INTERCONNECTION - Alabama | | | | | | | | | | | | | | Attachment: 3 | | Exhibit: A | |
|---|---|---|---|---|---|---|---|---|---|---|---|---|---|---|---|---|---|
| CATEGORY | | RATE ELEMENTS | Interim | Zone | BCS | USOC | RATES ($) | | | | | Svc Order Submitted Elec per LSR | Svc Order Submitted Manually per LSR | Incremental Charge - Manual Svc Order vs. Electronic-1st | Incremental Charge - Manual Svc Order vs. Electronic-Add'l | Incremental Charge - Manual Svc Order vs. Electronic-Disc 1st | Incremental Charge - Manual Svc Order vs. Electronic-Disc Add'l |
| | | | | | | | Rec | Nonrecurring | | Nonrecurring Disconnect | | OSS Rates ($) | | | | | |
| | | | | | | | | First | Add'l | First | Add'l | SOMEC | SOMAN | SOMAN | SOMAN | SOMAN | SOMAN |
| LOCAL INTERCONNECTION (CALL TRANSPORT AND TERMINATION) | | | | | | | | | | | | | | | | | |
| | NOTE: "bk" beside a rate indicates that the Parties have agreed to bill and keep for that element pursuant to the terms and conditions in Attachment 3. | | | | | | | | | | | | | | | | |
| | INTERCARRIER COMPENSATION FOR ISP-BOUND TRAFFIC AND LOCAL TRAFFIC | | | | | | | | | | | | | | | | |
| | | Single Rate for ISP-Bound Traffic and Local Traffic, per MOU | | | | | 0.0007 | | | | | | | | | | |
| | INTERCARRIER COMPENSATION FOR LOCAL TRANSIT TRAFFIC AND MTA TRAFFIC | | | | | | | | | | | | | | | | |
| | TANDEM SWITCHING | | | | | | | | | | | | | | | | |
| | | Tandem Switching Function Per MOU | | | OHD | | 0.000498 | | | | | | | | | | |
| | | Multiple Tandem Switching, per MOU (applies to intial tandem only) | | | OHD | | 0.000498 | | | | | | | | | | |
| | | Tandem Intermediary Charge, per MOU* | | | OHD | | 0.0015 | | | | | | | | | | |
| | * This charge is applicable only to transit traffic and is applied in addition to applicable switching and/or interconnection charges. | | | | | | | | | | | | | | | | |
| | TRUNK CHARGE | | | | | | | | | | | | | | | | |
| | | Installation Trunk Side Service - per DS0 | | | OHD | TPP6X | | 21.56bk | 8.12bk | | | | | | | | |
| | | Installation Trunk Side Service - per DS0 | | | OHD | TPP9X | | 21.56bk | 8.12bk | | | | | | | | |
| | | Dedicated End Office Trunk Port Service-per DS0** | | | OHD | TDEOP | 0.00 | | | | | | | | | | |
| | | Dedicated End Office Trunk Port Service-per DS1** | | | OH1 OH1MS | TDE1P | 0.00 | | | | | | | | | | |
| | | Dedicated Tandem Trunk Port Service-per DS0** | | | OHD | TDWOP | 0.00 | | | | | | | | | | |
| | | Dedicated Tandem Trunk Port Service-per DS1** | | | OH1 OH1MS | TDW1P | 0.00 | | | | | | | | | | |
| | ** This rate element is recovered on a per MOU basis and is included in the End Office Switching and Tandem Switching, per MOU rate elements | | | | | | | | | | | | | | | | |
| | COMMON TRANSPORT (Shared) | | | | | | | | | | | | | | | | |
| | | Common Transport - Per Mile, Per MOU | | | OHD | | 0.0000023 | | | | | | | | | | |
| | | Common Transport - Facilities Termination Per MOU | | | OHD | | 0.0003224 | | | | | | | | | | |
| LOCAL INTERCONNECTION (DEDICATED TRANSPORT) | | | | | | | | | | | | | | | | | |
| | INTEROFFICE CHANNEL - DEDICATED TRANSPORT | | | | | | | | | | | | | | | | |
| | | Interoffice Channel - Dedicated Transport - 2-Wire Voice Grade - Per Mile per month | | | OHM | 1L5NF | 0.008838bk | | | | | | | | | | |
| | | Interoffice Channel - Dedicated Transport- 2- Wire Voice Grade - Facility Termination per month | | | OHM | 1L5NF | 21.13bk | 40.54bk | 27.41bk | 16.74bk | 6.90bk | | | | | | |
| | | Interoffice Channel - Dedicated Transport - 56 kbps - per mile per month | | | OHM | 1L5NK | 0.008838bk | | | | | | | | | | |
| | | Interoffice Channel - Dedicated Transport - 56 kbps - Facility Termination per month | | | OHM | 1L5NK | 15.12bk | 40.54bk | 27.41bk | 16.74bk | 6.90bk | | | | | | |
| | | Interoffice Channel - Dedicated Transport - 64 kbps - per mile per month | | | OHM | 1L5NK | 0.008838bk | | | | | | | | | | |
| | | Interoffice Channel - Dedicated Transport - 64 kbps - Facility Termination per month | | | OHM | 1L5NK | 15.12bk | 40.54bk | 27.41bk | 16.74bk | 6.90bk | | | | | | |
| | | Interoffice Channel - Dedicated Channel - DS1 - Per Mile per month | | | OH1, OH1MS | 1L5NL | 0.18bk | | | | | | | | | | |
| | | Interoffice Channel - Dedicated Tranport - DS1 - Facility Termination per month | | | OH1, OH1MS | 1L5NL | 60.16bk | 89.27bk | 81.81bk | 16.35bk | 14.44bk | | | | | | |
| | | Interoffice Channel - Dedicated Transport - DS3 - Per Mile per month | | | OH3, OH3MS | 1L5NM | 4.09bk | | | | | | | | | | |
| | | Interoffice Channel - Dedicated Transport - DS3 - Facility Termination per month | | | OH3, OH3MS | 1L5NM | 703.52bk | 278.75bk | 162.76bk | 60.20bk | 58.46bk | | | | | | |
| | LOCAL CHANNEL - DEDICATED TRANSPORT | | | | | | | | | | | | | | | | |
| | | Local Channel - Dedicated - 2-Wire Voice Grade per month | | | OHM | TEFV2 | 13.97bk | 193.10bk | 33.17bk | 36.64bk | 3.20bk | | | | | | |
| | | Local Channel - Dedicated - 4-Wire Voice Grade per month | | | OHM | TEFV4 | 14.93bk | 193.53bk | 33.60bk | 37.11bk | 3.67bk | | | | | | |
| | | Local Channel - Dedicated - DS1 per month | | | OH1 | TEFHG | 35.76bk | 177.47bk | 153.72bk | 22.19bk | 15.26bk | | | | | | |
| | | Local Channel - Dedicated - DS3 Facility Termination per month | | | OH3 | TEFHJ | 416.54bk | 451.52bk | 263.94bk | 119.49bk | 83.58bk | | | | | | |
| | LOCAL INTERCONNECTION MID-SPAN MEET | | | | | | | | | | | | | | | | |
| | NOTE: If Access service ride Mid-Span Meet, one-half the tariffed service Local Channel rate is applicable. | | | | | | | | | | | | | | | | |
| | | Local Channel - Dedicated - DS1 per month | | | OH1MS | TEFHG | 0.00 | 0.00 | | | | | | | | | |
| | | Local Channel - Dedicated - DS3 per month | | | OH3MS | TEFHJ | 0.00 | 0.00 | | | | | | | | | |
| | MULTIPLEXERS | | | | | | | | | | | | | | | | |
| | | Channelization - DS1 to DS0 Channel System | | | OH1, OH1MS | SATN1 | 101.06bk | 91.04bk | 62.57bk | 10.54bk | 9.79bk | | | | | | |
| | | DS3 to DS1 Channel System per month | | | OH3, OH3MS | SATNS | 166.13bk | 178.14bk | 93.97bk | 33.26bk | 31.63bk | | | | | | |
| | | DS3 Interface Unit (DS1 COCI) per month | | | OH1, OH1MS | SATCO | 12.70bk | 6.58bk | 4.72bk | | | | | | | | |

| LOCAL INTERCONNECTION - Florida | | | | | | | | | | | | | | Attachment: 3 | | Exhibit: A | |
|---|---|---|---|---|---|---|---|---|---|---|---|---|---|---|---|---|---|
| CATEGORY | RATE ELEMENTS | Interim | Zone | BCS | USOC | RATES ($) | | | | | Svc Order Submitted Elec per LSR | Svc Order Submitted Manually per LSR | Incremental Charge - Manual Svc Order vs. Electronic- 1st | Incremental Charge - Manual Svc Order vs. Electronic- Add'l | Incremental Charge - Manual Svc Order vs. Electronic- Disc 1st | Incremental Charge - Manual Svc Order vs. Electronic- Disc Add'l |
| | | | | | | Rec | Nonrecurring | | Nonrecurring Disconnect | | OSS Rates ($) | | | | | |
| | | | | | | | First | Add'l | First | Add'l | SOMEC | SOMAN | SOMAN | SOMAN | SOMAN | SOMAN |
| LOCAL INTERCONNECTION (CALL TRANSPORT AND TERMINATION) | | | | | | | | | | | | | | | | |
| | NOTE: "bk" beside a rate indicates that the Parties have agreed to bill and keep for that element pursuant to the terms and conditions in Attachment 3. | | | | | | | | | | | | | | | |
| | INTERCARRIER COMPENSATION FOR ISP-BOUND TRAFFIC AND LOCAL TRAFFIC | | | | | | | | | | | | | | | |
| | Single Rate for ISP-Bound Traffic and Local Traffic, per MOU | | | | | 0.0007 | | | | | | | | | | |
| | INTERCARRIER COMPENSATION FOR LOCAL TRANSIT TRAFFIC AND MTA TRAFFIC | | | | | | | | | | | | | | | |
| | TANDEM SWITCHING | | | | | | | | | | | | | | | |
| | Tandem Switching Function Per MOU | | | OHD | | 0.0006019 | | | | | | | | | | |
| | Multiple Tandem Switching, per MOU (applies to intial tandem only) | | | OHD | | 0.0006019 | | | | | | | | | | |
| | Tandem Intermediary Charge, per MOU* | | | OHD | | 0.0015 | | | | | | | | | | |
| | * This charge is applicable only to transit traffic and is applied in addition to applicable switching and/or interconnection charges. | | | | | | | | | | | | | | | |
| | TRUNK CHARGE | | | | | | | | | | | | | | | |
| | Installation Trunk Side Service - per DS0 | | | OHD | TPP6X | | 21.73bk | 8.19bk | | | | | | | | |
| | Installation Trunk Side Service - per DS0 | | | OHD | TPP9X | | 21.73bk | 8.19bk | | | | | | | | |
| | Dedicated End Office Trunk Port Service-per DS0** | | | OHD | TDEOP | 0.00 | | | | | | | | | | |
| | Dedicated End Office Trunk Port Service-per DS1** | | | OH1 OH1MS | TDE1P | 0.00 | | | | | | | | | | |
| | Dedicated Tandem Trunk Port Service-per DS0** | | | OHD | TDWOP | 0.00 | | | | | | | | | | |
| | Dedicated Tandem Trunk Port Service-per DS1** | | | OH1 OH1MS | TDW1P | 0.00 | | | | | | | | | | |
| | ** This rate element is recovered on a per MOU basis and is included in the End Office Switching and Tandem Switching, per MOU rate elements | | | | | | | | | | | | | | | |
| | COMMON TRANSPORT (Shared) | | | | | | | | | | | | | | | |
| | Common Transport - Per Mile, Per MOU | | | OHD | | 0.0000035 | | | | | | | | | | |
| | Common Transport - Facilities Termination Per MOU | | | OHD | | 0.0004372 | | | | | | | | | | |
| LOCAL INTERCONNECTION (DEDICATED TRANSPORT) | | | | | | | | | | | | | | | | |
| | INTEROFFICE CHANNEL - DEDICATED TRANSPORT | | | | | | | | | | | | | | | |
| | Interoffice Channel - Dedicated Transport - 2-Wire Voice Grade - Per Mile per month | | | OHM | 1L5NF | 0.0091bk | | | | | | | | | | |
| | Interoffice Channel - Dedicated Transport- 2- Wire Voice Grade - Facility Termination per month | | | OHM | 1L5NF | 25.32bk | 47.35bk | 31.78bk | 18.31bk | 7.03bk | | | | | | |
| | Interoffice Channel - Dedicated Transport - 56 kbps - per mile per month | | | OHM | 1L5NK | 0.0091bk | | | | | | | | | | |
| | Interoffice Channel - Dedicated Transport - 56 kbps - Facility Termination per month | | | OHM | 1L5NK | 18.44bk | 47.35bk | 31.78bk | 18.31bk | 7.03bk | | | | | | |
| | Interoffice Channel - Dedicated Transport - 64 kbps - per mile per month | | | OHM | 1L5NK | 0.0091bk | | | | | | | | | | |
| | Interoffice Channel - Dedicated Transport - 64 kbps - Facility Termination per month | | | OHM | 1L5NK | 18.44bk | 47.35bk | 31.78bk | 18.31bk | 7.03bk | | | | | | |
| | Interoffice Channel - Dedicated Channel - DS1 - Per Mile per month | | | OH1, OH1MS | 1L5NL | 0.1856bk | | | | | | | | | | |
| | Interoffice Channel - Dedicated Tranport - DS1 - Facility Termination per month | | | OH1, OH1MS | 1L5NL | 88.44bk | 105.54bk | 98.47bk | 21.47bk | 19.05bk | | | | | | |
| | Interoffice Channel - Dedicated Transport - DS3 - Per Mile per month | | | OH3, OH3MS | 1L5NM | 3.87bk | | | | | | | | | | |
| | Interoffice Channel - Dedicated Transport - DS3 - Facility Termination per month | | | OH3, OH3MS | 1L5NM | 1071.00bk | 335.46bk | 219.28bk | 72.03bk | 70.56bk | | | | | | |
| | LOCAL CHANNEL - DEDICATED TRANSPORT | | | | | | | | | | | | | | | |
| | Local Channel - Dedicated - 2-Wire Voice Grade per month | | | OHM | TEFV2 | 19.66bk | 265.84bk | 46.97bk | 37.63bk | 4.00bk | | | | | | |
| | Local Channel - Dedicated - 4-Wire Voice Grade per month | | | OHM | TEFV4 | 20.45bk | 266.54bk | 47.67bk | 44.22bk | 5.33bk | | | | | | |
| | Local Channel - Dedicated - DS1 per month | | | OH1 | TEFHG | 36.49bk | 216.65bk | 183.54bk | 24.30bk | 16.95bk | | | | | | |
| | Local Channel - Dedicated - DS3 Facility Termination per month | | | OH3 | TEFHJ | 531.91bk | 556.37bk | 343.01bk | 139.13bk | 96.84bk | | | | | | |
| | LOCAL INTERCONNECTION MID-SPAN MEET | | | | | | | | | | | | | | | |
| | NOTE: If Access service ride Mid-Span Meet, one-half the tariffed service Local Channel rate is applicable. | | | | | | | | | | | | | | | |
| | Local Channel - Dedicated - DS1 per month | | | OH1MS | TEFHG | 0.00 | 0.00 | | | | | | | | | |
| | Local Channel - Dedicated - DS3 per month | | | OH3MS | TEFHJ | 0.00 | 0.00 | | | | | | | | | |
| | MULTIPLEXERS | | | | | | | | | | | | | | | |
| | Channelization - DS1 to DS0 Channel System | | | OH1, OH1MS | SATN1 | 146.77bk | 101.42bk | 71.62bk | 11.09bk | 10.49bk | | | | | | |
| | DS3 to DS1 Channel System per month | | | OH3, OH3MS | SATNS | 211.19bk | 199.28bk | 118.64bk | 40.34bk | 39.07bk | | | | | | |
| | DS3 Interface Unit (DS1 COCI) per month | | | OH1, OH1MS | SATCO | 13.76bk | 10.07bk | 7.08bk | | | | | | | | |

| LOCAL INTERCONNECTION - Georgia | | | | | | | | | | | | | | Attachment: 3 | | Exhibit: A | |
|---|---|---|---|---|---|---|---|---|---|---|---|---|---|---|---|---|---|
| CATEGORY | | RATE ELEMENTS | Interim | Zone | BCS | USOC | RATES ($) | | | | | Svc Order Submitted Elec per LSR | Svc Order Submitted Manually per LSR | Incremental Charge - Manual Svc Order vs. Electronic-1st | Incremental Charge - Manual Svc Order vs. Electronic-Add'l | Incremental Charge - Manual Svc Order vs. Electronic-Disc 1st | Incremental Charge - Manual Svc Order vs. Electronic-Disc Add'l |
| | | | | | | | Rec | Nonrecurring | | Nonrecurring Disconnect | | OSS Rates ($) | | | | | |
| | | | | | | | | First | Add'l | First | Add'l | SOMEC | SOMAN | SOMAN | SOMAN | SOMAN | SOMAN |
| LOCAL INTERCONNECTION (CALL TRANSPORT AND TERMINATION) | | | | | | | | | | | | | | | | | |
| | NOTE: "bk" beside a rate indicates that the Parties have agreed to bill and keep for that element pursuant to the terms and conditions in Attachment 3. | | | | | | | | | | | | | | | | |
| | INTERCARRIER COMPENSATION FOR ISP-BOUND TRAFFIC AND LOCAL TRAFFIC | | | | | | | | | | | | | | | | |
| | | Single Rate for ISP-Bound Traffic and Local Traffic, per MOU | | | | | 0.0007 | | | | | | | | | | |
| | INTERCARRIER COMPENSATION FOR LOCAL TRANSIT TRAFFIC AND MTA TRAFFIC | | | | | | | | | | | | | | | | |
| | TANDEM SWITCHING | | | | | | | | | | | | | | | | |
| | | Tandem Switching Function Per MOU | | | OHD | | 0.0004086 | | | | | | | | | | |
| | | Multiple Tandem Switching, per MOU (applies to intial tandem only) | | | OHD | | 0.0004086 | | | | | | | | | | |
| | | Tandem Intermediary Charge, per MOU* | | | OHD | | 0.0015 | | | | | | | | | | |
| | * This charge is applicable only to transit traffic and is applied in addition to applicable switching and/or interconnection charges. | | | | | | | | | | | | | | | | |
| | TRUNK CHARGE | | | | | | | | | | | | | | | | |
| | | Installation Trunk Side Service - per DS0 | | | OHD | TPP6X | | 21.53bk | 8.11bk | | | | | | | | |
| | | Installation Trunk Side Service - per DS0 | | | OHD | TPP9X | | 21.53bk | 8.11bk | | | | | | | | |
| | | Dedicated End Office Trunk Port Service-per DS0** | | | OHD | TDEOP | 0.00 | | | | | | | | | | |
| | | Dedicated End Office Trunk Port Service-per DS1** | | | OH1 OH1MS | TDE1P | 0.00 | | | | | | | | | | |
| | | Dedicated Tandem Trunk Port Service-per DS0** | | | OHD | TDWOP | 0.00 | | | | | | | | | | |
| | | Dedicated Tandem Trunk Port Service-per DS1** | | | OH1 OH1MS | TDW1P | 0.00 | | | | | | | | | | |
| | ** This rate element is recovered on a per MOU basis and is included in the End Office Switching and Tandem Switching, per MOU rate elements | | | | | | | | | | | | | | | | |
| | COMMON TRANSPORT (Shared) | | | | | | | | | | | | | | | | |
| | | Common Transport - Per Mile, Per MOU | | | OHD | | 0.0000027 | | | | | | | | | | |
| | | Common Transport - Facilities Termination Per MOU | | | OHD | | 0.0001914 | | | | | | | | | | |
| LOCAL INTERCONNECTION (DEDICATED TRANSPORT) | | | | | | | | | | | | | | | | | |
| | INTEROFFICE CHANNEL - DEDICATED TRANSPORT | | | | | | | | | | | | | | | | |
| | | Interoffice Channel - Dedicated Transport - 2-Wire Voice Grade - Per Mile per month | | | OHM | 1L5NF | 0.0057bk | | | | | | | | | | |
| | | Interoffice Channel - Dedicated Transport- 2- Wire Voice Grade - Facility Termination per month | | | OHM | 1L5NF | 12.87bk | 48.455bk | 19.48bk | 16.575bk | 4.995bk | | | | | | |
| | | Interoffice Channel - Dedicated Transport - 56 kbps - per mile per month | | | OHM | 1L5NK | 0.0057bk | | | | | | | | | | |
| | | Interoffice Channel - Dedicated Transport - 56 kbps - Facility Termination per month | | | OHM | 1L5NK | 7.83bk | 48.455bk | 19.48bk | 16.575bk | 4.995bk | | | | | | |
| | | Interoffice Channel - Dedicated Transport - 64 kbps - per mile per month | | | OHM | 1L5NK | 0.0057bk | | | | | | | | | | |
| | | Interoffice Channel - Dedicated Transport - 64 kbps - Facility Termination per month | | | OHM | 1L5NK | 7.83bk | 48.455bk | 19.48bk | 16.575bk | 4.995bk | | | | | | |
| | | Interoffice Channel - Dedicated Channel - DS1 - Per Mile per month | | | OH1, OH1MS | 1L5NL | 0.1154bk | | | | | | | | | | |
| | | Interoffice Channel - Dedicated Tranport - DS1 - Facility Termination per month | | | OH1, OH1MS | 1L5NL | 34.19bk | 111.025bk | 80.28bk | 31.355bk | 21.73bk | | | | | | |
| | | Interoffice Channel - Dedicated Transport - DS3 - Per Mile per month | | | OH3, OH3MS | 1L5NM | 2.53bk | | | | | | | | | | |
| | | Interoffice Channel - Dedicated Transport - DS3 - Facility Termination per month | | | OH3, OH3MS | 1L5NM | 342.02bk | 320.47bk | 86.32bk | 66.77bk | 52.81bk | | | | | | |
| | LOCAL CHANNEL - DEDICATED TRANSPORT | | | | | | | | | | | | | | | | |
| | | Local Channel - Dedicated - 2-Wire Voice Grade per month | | | OHM | TEFV2 | 7.74bk | 121.065bk | 53.295bk | 46.395bk | 13.365bk | | | | | | |
| | | Local Channel - Dedicated - 4-Wire Voice Grade per month | | | OHM | TEFV4 | 8.72bk | 125.62bk | 54.43bk | 46.395bk | 13.365bk | | | | | | |
| | | Local Channel - Dedicated - DS1 per month | | | OH1 | TEFHG | 18.47bk | 149.46bk | 111.195bk | 40.355bk | 26.115bk | | | | | | |
| | | Local Channel - Dedicated - DS3 Facility Termination per month | | | OH3 | TEFHJ | 147.01bk | 445.01bk | 145.18bk | 112.905bk | 75.88bk | | | | | | |
| | LOCAL INTERCONNECTION MID-SPAN MEET | | | | | | | | | | | | | | | | |
| | NOTE: If Access service ride Mid-Span Meet, one-half the tariffed service Local Channel rate is applicable. | | | | | | | | | | | | | | | | |
| | | Local Channel - Dedicated - DS1 per month | | | OH1MS | TEFHG | 0.00 | 0.00 | | | | | | | | | |
| | | Local Channel - Dedicated - DS3 per month | | | OH3MS | TEFHJ | 0.00 | 0.00 | | | | | | | | | |
| | MULTIPLEXERS | | | | | | | | | | | | | | | | |
| | | Channelization - DS1 to DS0 Channel System | | | OH1, OH1MS | SATN1 | 69.75bk | 105.675bk | 41.585bk | 23.75bk | 4.19bk | | | | | | |
| | | DS3 to DS1 Channel System per month | | | OH3, OH3MS | SATNS | 121.9bk | 224.475bk | 71.83bk | 40.005bk | 31.065bk | | | | | | |
| | | DS3 Interface Unit (DS1 COCI) per month | | | OH1, OH1MS | SATCO | 7.35bk | 15.805bk | 11.385bk | 6.605bk | 6.605bk | | | | | | |

| LOCAL INTERCONNECTION - Kentucky | | | | | | | | | | | | | | Attachment: 3 | | Exhibit: A | |
|---|---|---|---|---|---|---|---|---|---|---|---|---|---|---|---|---|---|
| CATEGORY | | RATE ELEMENTS | Interim | Zone | BCS | USOC | RATES ($) | | | | | Svc Order Submitted Elec per LSR | Svc Order Submitted Manually per LSR | Incremental Charge - Manual Svc Order vs. Electronic- 1st | Incremental Charge - Manual Svc Order vs. Electronic- Add'l | Incremental Charge - Manual Svc Order vs. Electronic- Disc 1st | Incremental Charge - Manual Svc Order vs. Electronic- Disc Add'l |
| | | | | | | | Rec | Nonrecurring | | Nonrecurring Disconnect | | OSS Rates ($) | | | | | |
| | | | | | | | | First | Add'l | First | Add'l | SOMEC | SOMAN | SOMAN | SOMAN | SOMAN | SOMAN |
| LOCAL INTERCONNECTION (CALL TRANSPORT AND TERMINATION) | | | | | | | | | | | | | | | | | |
| | NOTE: "bk" beside a rate indicates that the Parties have agreed to bill and keep for that element pursuant to the terms and conditions in Attachment 3. | | | | | | | | | | | | | | | | |
| | INTERCARRIER COMPENSATION FOR ISP-BOUND TRAFFIC AND LOCAL TRAFFIC | | | | | | | | | | | | | | | | |
| | | Single Rate for ISP-Bound Traffic and Local Traffic, per MOU | | | | | 0.0007 | | | | | | | | | | |
| | INTERCARRIER COMPENSATION FOR LOCAL TRANSIT TRAFFIC AND MTA TRAFFIC | | | | | | | | | | | | | | | | |
| | TANDEM SWITCHING | | | | | | | | | | | | | | | | |
| | | Tandem Switching Function Per MOU | | | OHD | | 0.0006772 | | | | | | | | | | |
| | | Multiple Tandem Switching, per MOU (applies to intial tandem only) | | | OHD | | 0.0006772 | | | | | | | | | | |
| | | Tandem Intermediary Charge, per MOU* | | | OHD | | 0.0015 | | | | | | | | | | |
| | * This charge is applicable only to transit traffic and is applied in addition to applicable switching and/or interconnection charges. | | | | | | | | | | | | | | | | |
| | TRUNK CHARGE | | | | | | | | | | | | | | | | |
| | | Installation Trunk Side Service - per DS0 | | | OHD | TPP6X | | 21.58bk | 8.13bk | | | | | | | | |
| | | Installation Trunk Side Service - per DS0 | | | OHD | TPP9X | | 21.58bk | 8.13bk | | | | | | | | |
| | | Dedicated End Office Trunk Port Service-per DS0** | | | OHD | TDEOP | 0.00 | | | | | | | | | | |
| | | Dedicated End Office Trunk Port Service-per DS1** | | | OH1 OH1MS | TDE1P | 0.00 | | | | | | | | | | |
| | | Dedicated Tandem Trunk Port Service-per DS0** | | | OHD | TDWOP | 0.00 | | | | | | | | | | |
| | | Dedicated Tandem Trunk Port Service-per DS1** | | | OH1 OH1MS | TDW1P | 0.00 | | | | | | | | | | |
| | ** This rate element is recovered on a per MOU basis and is included in the End Office Switching and Tandem Switching, per MOU rate elements | | | | | | | | | | | | | | | | |
| | COMMON TRANSPORT (Shared) | | | | | | | | | | | | | | | | |
| | | Common Transport - Per Mile, Per MOU | | | OHD | | 0.000003 | | | | | | | | | | |
| | | Common Transport - Facilities Termination Per MOU | | | OHD | | 0.0007466 | | | | | | | | | | |
| LOCAL INTERCONNECTION (DEDICATED TRANSPORT) | | | | | | | | | | | | | | | | | |
| | INTEROFFICE CHANNEL - DEDICATED TRANSPORT | | | | | | | | | | | | | | | | |
| | | Interoffice Channel - Dedicated Transport - 2-Wire Voice Grade - Per Mile per month | | | OHM | 1L5NF | 0.01bk | | | | | | | | | | |
| | | Interoffice Channel - Dedicated Transport- 2- Wire Voice Grade - Facility Termination per month | | | OHM | 1L5NF | 29.11bk | 47.34bk | 31.78bk | 22.77bk | | | | | | | |
| | | Interoffice Channel - Dedicated Transport - 56 kbps - per mile per month | | | OHM | 1L5NK | 0.0115bk | | | | | | | | | | |
| | | Interoffice Channel - Dedicated Transport - 56 kbps - Facility Termination per month | | | OHM | 1L5NK | 20.97bk | 47.35bk | 31.78bk | 22.77bk | 8.75bk | | | | | | |
| | | Interoffice Channel - Dedicated Transport - 64 kbps - per mile per month | | | OHM | 1L5NK | 0.0115bk | | | | | | | | | | |
| | | Interoffice Channel - Dedicated Transport - 64 kbps - Facility Termination per month | | | OHM | 1L5NK | 20.97bk | 47.35bk | 31.78bk | 22.77bk | 8.75bk | | | | | | |
| | | Interoffice Channel - Dedicated Channel - DS1 - Per Mile per month | | | OH1, OH1MS | 1L5NL | 0.23bk | | | | | | | | | | |
| | | Interoffice Channel - Dedicated Tranport - DS1 - Facility Termination per month | | | OH1, OH1MS | 1L5NL | 96.04bk | 105.52bk | 98.46bk | 23.09bk | 20.49bk | | | | | | |
| | | Interoffice Channel - Dedicated Transport - DS3 - Per Mile per month | | | OH3, OH3MS | 1L5NM | 4.97bk | | | | | | | | | | |
| | | Interoffice Channel - Dedicated Transport - DS3 - Facility Termination per month | | | OH3, OH3MS | 1L5NM | 1175.15bk | 335.4bk | 219.24bk | 89.57bk | 87.75bk | | | | | | |
| | LOCAL CHANNEL - DEDICATED TRANSPORT | | | | | | | | | | | | | | | | |
| | | Local Channel - Dedicated - 2-Wire Voice Grade per month | | | OHM | TEFV2 | 18.57bk | 265.78bk | 46.96bk | 46.79bk | 4.98bk | | | | | | |
| | | Local Channel - Dedicated - 4-Wire Voice Grade per month | | | OHM | TEFV4 | 19.86bk | 266.48bk | 47.65bk | 47.54bk | 5.73bk | | | | | | |
| | | Local Channel - Dedicated - DS1 per month | | | OH1 | TEFHG | 40.46bk | 209.6bk | 176.51bk | 30.21bk | 21.07bk | | | | | | |
| | | Local Channel - Dedicated - DS3 Facility Termination per month | | | OH3 | TEFHJ | 576.05bk | 551.38bk | 338.08bk | 173bk | 120.42bk | | | | | | |
| | LOCAL INTERCONNECTION MID-SPAN MEET | | | | | | | | | | | | | | | | |
| | NOTE: If Access service ride Mid-Span Meet, one-half the tariffed service Local Channel rate is applicable. | | | | | | | | | | | | | | | | |
| | | Local Channel - Dedicated - DS1 per month | | | OH1MS | TEFHG | 0.00 | 0.00 | | | | | | | | | |
| | | Local Channel - Dedicated - DS3 per month | | | OH3MS | TEFHJ | 0.00 | 0.00 | | | | | | | | | |
| | MULTIPLEXERS | | | | | | | | | | | | | | | | |
| | | Channelization - DS1 to DS0 Channel System | | | OH1, OH1MS | SATN1 | 113.33bk | 101.4bk | 71.6bk | 13.79bk | 13.04bk | | | | | | |
| | | DS3 to DS1 Channel System per month | | | OH3, OH3MS | SATNS | 158.2bk | 199.23bk | 118.62bk | 50.16bk | bk | | | | | | |
| | | DS3 Interface Unit (DS1 COCI) per month | | | OH1, OH1MS | SATCO | 11.8bk | 10.07bk | 7.08bk | | | | | | | | |

| LOCAL INTERCONNECTION - Louisiana | | | | | | | | | | | | | | Attachment: 3 | | Exhibit: A | |
|---|---|---|---|---|---|---|---|---|---|---|---|---|---|---|---|---|---|
| CATEGORY | | RATE ELEMENTS | Interim | Zone | BCS | USOC | RATES ($) | | | | | Svc Order Submitted Elec per LSR | Svc Order Submitted Manually per LSR | Incremental Charge - Manual Svc Order vs. Electronic-1st | Incremental Charge - Manual Svc Order vs. Electronic-Add'l | Incremental Charge - Manual Svc Order vs. Electronic-Disc 1st | Incremental Charge - Manual Svc Order vs. Electronic-Disc Add'l |
| | | | | | | | Rec | Nonrecurring | | Nonrecurring Disconnect | | OSS Rates ($) | | | | | |
| | | | | | | | | First | Add'l | First | Add'l | SOMEC | SOMAN | SOMAN | SOMAN | SOMAN | SOMAN |
| LOCAL INTERCONNECTION (CALL TRANSPORT AND TERMINATION) | | | | | | | | | | | | | | | | | |
| | NOTE: "bk" beside a rate indicates that the Parties have agreed to bill and keep for that element pursuant to the terms and conditions in Attachment 3. | | | | | | | | | | | | | | | | |
| | INTERCARRIER COMPENSATION FOR ISP-BOUND TRAFFIC AND LOCAL TRAFFIC | | | | | | | | | | | | | | | | |
| | | Single Rate for ISP-Bound Traffic and Local Traffic, per MOU | | | | | 0.0007 | | | | | | | | | | |
| | INTERCARRIER COMPENSATION FOR LOCAL TRANSIT TRAFFIC AND MTA TRAFFIC | | | | | | | | | | | | | | | | |
| | TANDEM SWITCHING | | | | | | | | | | | | | | | | |
| | | Tandem Switching Function Per MOU | | | OHD | | 0.0005507 | | | | | | | | | | |
| | | Multiple Tandem Switching, per MOU (applies to intial tandem only) | | | OHD | | 0.0005507 | | | | | | | | | | |
| | | Tandem Intermediary Charge, per MOU* | | | OHD | | 0.0015 | | | | | | | | | | |
| | * This charge is applicable only to transit traffic and is applied in addition to applicable switching and/or interconnection charges. | | | | | | | | | | | | | | | | |
| | TRUNK CHARGE | | | | | | | | | | | | | | | | |
| | | Installation Trunk Side Service - per DS0 | | | OHD | TPP6X | | 21.64bk | 8.15bk | | | | | | | | |
| | | Installation Trunk Side Service - per DS0 | | | OHD | TPP9X | | 21.64bk | 8.15bk | | | | | | | | |
| | | Dedicated End Office Trunk Port Service-per DS0** | | | OHD | TDEOP | 0.00 | | | | | | | | | | |
| | | Dedicated End Office Trunk Port Service-per DS1** | | | OH1 OH1MS | TDE1P | 0.00 | | | | | | | | | | |
| | | Dedicated Tandem Trunk Port Service-per DS0** | | | OHD | TDWOP | 0.00 | | | | | | | | | | |
| | | Dedicated Tandem Trunk Port Service-per DS1** | | | OH1 OH1MS | TDW1P | 0.00 | | | | | | | | | | |
| | ** This rate element is recovered on a per MOU basis and is included in the End Office Switching and Tandem Switching, per MOU rate elements | | | | | | | | | | | | | | | | |
| | COMMON TRANSPORT (Shared) | | | | | | | | | | | | | | | | |
| | | Common Transport - Per Mile, Per MOU | | | OHD | | 0.0000032 | | | | | | | | | | |
| | | Common Transport - Facilities Termination Per MOU | | | OHD | | 0.0003748 | | | | | | | | | | |
| LOCAL INTERCONNECTION (DEDICATED TRANSPORT) | | | | | | | | | | | | | | | | | |
| | INTEROFFICE CHANNEL - DEDICATED TRANSPORT | | | | | | | | | | | | | | | | |
| | | Interoffice Channel - Dedicated Transport - 2-Wire Voice Grade - Per Mile per month | | | OHM | 1L5NF | 0.013bk | | | | | | | | | | |
| | | Interoffice Channel - Dedicated Transport- 2- Wire Voice Grade - Facility Termination per month | | | OHM | 1L5NF | 22.6bk | 39.36bk | 26.62bk | | | | | | | | |
| | | Interoffice Channel - Dedicated Transport - 56 kbps - per mile per month | | | OHM | 1L5NK | 0.013bk | | | | | | | | | | |
| | | Interoffice Channel - Dedicated Transport - 56 kbps - Facility Termination per month | | | OHM | 1L5NK | 15.61bk | 39.37bk | 26.62bk | | | | | | | | |
| | | Interoffice Channel - Dedicated Transport - 64 kbps - per mile per month | | | OHM | 1L5NK | 0.013bk | | | | | | | | | | |
| | | Interoffice Channel - Dedicated Transport - 64 kbps - Facility Termination per month | | | OHM | 1L5NK | 15.61bk | 39.37bk | 26.62bk | | | | | | | | |
| | | Interoffice Channel - Dedicated Channel - DS1 - Per Mile per month | | | OH1, OH1MS | 1L5NL | 0.2652bk | | | | | | | | | | |
| | | Interoffice Channel - Dedicated Tranport - DS1 - Facility Termination per month | | | OH1, OH1MS | 1L5NL | 70.47bk | 86.69bk | 79.44bk | | | | | | | | |
| | | Interoffice Channel - Dedicated Transport - DS3 - Per Mile per month | | | OH3, OH3MS | 1L5NM | 6.04bk | | | | | | | | | | |
| | | Interoffice Channel - Dedicated Transport - DS3 - Facility Termination per month | | | OH3, OH3MS | 1L5NM | 850.45bk | 270.69bk | 158.05bk | | | | | | | | |
| | LOCAL CHANNEL - DEDICATED TRANSPORT | | | | | | | | | | | | | | | | |
| | | Local Channel - Dedicated - 2-Wire Voice Grade per month | | | OHM | TEFV2 | 18.32bk | 187.51bk | 32.21bk | | | | | | | | |
| | | Local Channel - Dedicated - 4-Wire Voice Grade per month | | | OHM | TEFV4 | 19.41bk | 187.94bk | 32.63bk | | | | | | | | |
| | | Local Channel - Dedicated - DS1 per month | | | OH1 | TEFHG | 39.18bk | 172.34bk | 149.27bk | | | | | | | | |
| | | Local Channel - Dedicated - DS3 Facility Termination per month | | | OH3 | TEFHJ | 469.44bk | 438.46bk | 256.3bk | | | | | | | | |
| | LOCAL INTERCONNECTION MID-SPAN MEET | | | | | | | | | | | | | | | | |
| | NOTE: If Access service ride Mid-Span Meet, one-half the tariffed service Local Channel rate is applicable. | | | | | | | | | | | | | | | | |
| | | Local Channel - Dedicated - DS1 per month | | | OH1MS | TEFHG | 0.00 | 0.00 | | | | | | | | | |
| | | Local Channel - Dedicated - DS3 per month | | | OH3MS | TEFHJ | 0.00 | 0.00 | | | | | | | | | |
| | MULTIPLEXERS | | | | | | | | | | | | | | | | |
| | | Channelization - DS1 to DS0 Channel System | | | OH1, OH1MS | SATN1 | 105.09bk | 88.41bk | 60.76bk | | | | | | | | |
| | | DS3 to DS1 Channel System per month | | | OH3, OH3MS | SATNS | 201.48bk | 172.99bk | 91.25bk | | | | | | | | |
| | | DS3 Interface Unit (DS1 COCI) per month | | | OH1, OH1MS | SATCO | 11.78bk | 6.39bk | 4.58bk | | | | | | | | |

| LOCAL INTERCONNECTION - Mississippi | | | | | | | | | | | | | | Attachment: 3 | | Exhibit: A | |
|---|---|---|---|---|---|---|---|---|---|---|---|---|---|---|---|---|---|
| CATEGORY | RATE ELEMENTS | Interim | Zone | BCS | USOC | RATES ($) | | | | | Svc Order Submitted Elec per LSR | Svc Order Submitted Manually per LSR | Incremental Charge - Manual Svc Order vs. Electronic-1st | Incremental Charge - Manual Svc Order vs. Electronic-Add'l | Incremental Charge - Manual Svc Order vs. Electronic-Disc 1st | Incremental Charge - Manual Svc Order vs. Electronic-Disc Add'l |
| | | | | | | Rec | Nonrecurring | | Nonrecurring Disconnect | | OSS Rates ($) | | | | | |
| | | | | | | | First | Add'l | First | Add'l | SOMEC | SOMAN | SOMAN | SOMAN | SOMAN | SOMAN |
| LOCAL INTERCONNECTION (CALL TRANSPORT AND TERMINATION) | | | | | | | | | | | | | | | | |
| | NOTE: "bk" beside a rate indicates that the Parties have agreed to bill and keep for that element pursuant to the terms and conditions in Attachment 3. | | | | | | | | | | | | | | | |
| | INTERCARRIER COMPENSATION FOR ISP-BOUND TRAFFIC AND LOCAL TRAFFIC | | | | | | | | | | | | | | | |
| | Single Rate for ISP-Bound Traffic and Local Traffic, per MOU | | | | | 0.0007 | | | | | | | | | | |
| | INTERCARRIER COMPENSATION FOR LOCAL TRANSIT TRAFFIC AND MTA TRAFFIC | | | | | | | | | | | | | | | |
| | TANDEM SWITCHING | | | | | | | | | | | | | | | |
| | Tandem Switching Function Per MOU | | | OHD | | 0.0005379 | | | | | | | | | | |
| | Multiple Tandem Switching, per MOU (applies to intial tandem only) | | | OHD | | 0.0005379 | | | | | | | | | | |
| | Tandem Intermediary Charge, per MOU* | | | OHD | | 0.0015 | | | | | | | | | | |
| | * This charge is applicable only to transit traffic and is applied in addition to applicable switching and/or interconnection charges. | | | | | | | | | | | | | | | |
| | TRUNK CHARGE | | | | | | | | | | | | | | | |
| | Installation Trunk Side Service - per DS0 | | | OHD | TPP6X | | 21.58bk | 8.13bk | | | | | | | | |
| | Installation Trunk Side Service - per DS0 | | | OHD | TPP9X | | 21.58bk | 8.13bk | | | | | | | | |
| | Dedicated End Office Trunk Port Service-per DS0** | | | OHD | TDEOP | 0.00 | | | | | | | | | | |
| | Dedicated End Office Trunk Port Service-per DS1** | | | OH1 OH1MS | TDE1P | 0.00 | | | | | | | | | | |
| | Dedicated Tandem Trunk Port Service-per DS0** | | | OHD | TDWOP | 0.00 | | | | | | | | | | |
| | Dedicated Tandem Trunk Port Service-per DS1** | | | OH1 OH1MS | TDW1P | 0.00 | | | | | | | | | | |
| | ** This rate element is recovered on a per MOU basis and is included in the End Office Switching and Tandem Switching, per MOU rate elements | | | | | | | | | | | | | | | |
| | COMMON TRANSPORT (Shared) | | | | | | | | | | | | | | | |
| | Common Transport - Per Mile, Per MOU | | | OHD | | 0.0000026 | | | | | | | | | | |
| | Common Transport - Facilities Termination Per MOU | | | OHD | | 0.0004541 | | | | | | | | | | |
| LOCAL INTERCONNECTION (DEDICATED TRANSPORT) | | | | | | | | | | | | | | | | |
| | INTEROFFICE CHANNEL - DEDICATED TRANSPORT | | | | | | | | | | | | | | | |
| | Interoffice Channel - Dedicated Transport - 2-Wire Voice Grade - Per Mile per month | | | OHM | 1L5NF | 0.0098bk | | | | | | | | | | |
| | Interoffice Channel - Dedicated Transport- 2- Wire Voice Grade - Facility Termination per month | | | OHM | 1L5NF | 22.52bk | 40.77bk | 27.57bk | 17.26bk | 7.11bk | | | | | | |
| | Interoffice Channel - Dedicated Transport - 56 kbps - per mile per month | | | OHM | 1L5NK | 0.0098bk | | | | | | | | | | |
| | Interoffice Channel - Dedicated Transport - 56 kbps - Facility Termination per month | | | OHM | 1L5NK | 15.68bk | 40.78bk | 27.57bk | 17.26bk | 7.11bk | | | | | | |
| | Interoffice Channel - Dedicated Transport - 64 kbps - per mile per month | | | OHM | 1L5NK | 0.0098bk | | | | | | | | | | |
| | Interoffice Channel - Dedicated Transport - 64 kbps - Facility Termination per month | | | OHM | 1L5NK | 15.68bk | 40.78bk | 27.57bk | 17.26bk | 7.11bk | | | | | | |
| | Interoffice Channel - Dedicated Channel - DS1 - Per Mile per month | | | OH1, OH1MS | 1L5NL | 0.201bk | | | | | | | | | | |
| | Interoffice Channel - Dedicated Tranport - DS1 - Facility Termination per month | | | OH1, OH1MS | 1L5NL | 57.33bk | 89.79bk | 82.28bk | 16.86bk | 14.9bk | | | | | | |
| | Interoffice Channel - Dedicated Transport - DS3 - Per Mile per month | | | OH3, OH3MS | 1L5NM | 4.76bk | | | | | | | | | | |
| | Interoffice Channel - Dedicated Transport - DS3 - Facility Termination per month | | | OH3, OH3MS | 1L5NM | 641.9bk | 280.37bk | 163.7bk | 62.08bk | 60.29bk | | | | | | |
| | LOCAL CHANNEL - DEDICATED TRANSPORT | | | | | | | | | | | | | | | |
| | Local Channel - Dedicated - 2-Wire Voice Grade per month | | | OHM | TEFV2 | 14.91bk | 194.22bk | 33.36bk | 37.79bk | 3.3bk | | | | | | |
| | Local Channel - Dedicated - 4-Wire Voice Grade per month | | | OHM | TEFV4 | 15.99bk | 194.66bk | 33.8bk | 38.27bk | 3.78bk | | | | | | |
| | Local Channel - Dedicated - DS1 per month | | | OH1 | TEFHG | 36.83bk | 178.5bk | 154.61bk | 22.89bk | 15.74bk | | | | | | |
| | Local Channel - Dedicated - DS3 Facility Termination per month | | | OH3 | TEFHJ | 413.87bk | 454.13bk | 264.47bk | 123.23bk | 86.19bk | | | | | | |
| | LOCAL INTERCONNECTION MID-SPAN MEET | | | | | | | | | | | | | | | |
| | NOTE: If Access service ride Mid-Span Meet, one-half the tariffed service Local Channel rate is applicable. | | | | | | | | | | | | | | | |
| | Local Channel - Dedicated - DS1 per month | | | OH1MS | TEFHG | 0.00 | 0.00 | | | | | | | | | |
| | Local Channel - Dedicated - DS3 per month | | | OH3MS | TEFHJ | 0.00 | 0.00 | | | | | | | | | |
| | MULTIPLEXERS | | | | | | | | | | | | | | | |
| | Channelization - DS1 to DS0 Channel System | | | OH1, OH1MS | SATN1 | 102.85bk | 91.57bk | 62.94bk | 10.87bk | 10.1bk | | | | | | |
| | DS3 to DS1 Channel System per month | | | OH3, OH3MS | SATNS | 170.63bk | 179.17bk | 94.52bk | 34.3bk | 32.82bk | | | | | | |
| | DS3 Interface Unit (DS1 COCI) per month | | | OH1, OH1MS | SATCO | 12.96bk | 6.62bk | 4.74bk | | | | | | | | |

| LOCAL INTERCONNECTION - North Carolina | | | | | | | | | | | | | | Attachment: 3 | | Exhibit: A | |
|---|---|---|---|---|---|---|---|---|---|---|---|---|---|---|---|---|---|
| CATEGORY | RATE ELEMENTS | Interim | Zone | BCS | USOC | RATES ($) | | | | | Svc Order Submitted Elec per LSR | Svc Order Submitted Manually per LSR | Incremental Charge - Manual Svc Order vs. Electronic-1st | Incremental Charge - Manual Svc Order vs. Electronic-Add'l | Incremental Charge - Manual Svc Order vs. Electronic-Disc 1st | Incremental Charge - Manual Svc Order vs. Electronic-Disc Add'l |
| | | | | | | Rec | Nonrecurring | | Nonrecurring Disconnect | | OSS Rates ($) | | | | | |
| | | | | | | | First | Add'l | First | Add'l | SOMEC | SOMAN | SOMAN | SOMAN | SOMAN | SOMAN |
| LOCAL INTERCONNECTION (CALL TRANSPORT AND TERMINATION) | | | | | | | | | | | | | | | | |
| | NOTE: "bk" beside a rate indicates that the Parties have agreed to bill and keep for that element pursuant to the terms and conditions in Attachment 3. | | | | | | | | | | | | | | | |
| | INTERCARRIER COMPENSATION FOR ISP-BOUND TRAFFIC AND LOCAL TRAFFIC | | | | | | | | | | | | | | | |
| | Single Rate for ISP-Bound Traffic and Local Traffic, per MOU | | | | | 0.0007 | | | | | | | | | | |
| | INTERCARRIER COMPENSATION FOR LOCAL TRANSIT TRAFFIC AND MTA TRAFFIC | | | | | | | | | | | | | | | |
| | TANDEM SWITCHING | | | | | | | | | | | | | | | |
| | Tandem Switching Function Per MOU | | | OHD | | 0.0012 | | | | | | | | | | |
| | Multiple Tandem Switching, per MOU (applies to intial tandem only) | | | OHD | | 0.0012 | | | | | | | | | | |
| | Tandem Intermediary Charge, per MOU* | | | OHD | | 0.0015 | | | | | | | | | | |
| | * This charge is applicable only to transit traffic and is applied in addition to applicable switching and/or interconnection charges. | | | | | | | | | | | | | | | |
| | TRUNK CHARGE | | | | | | | | | | | | | | | |
| | Installation Trunk Side Service - per DS0 | | | OHD | TPP6X | | 21.55bk | 8.12bk | | | | | | | | |
| | Installation Trunk Side Service - per DS0 | | | OHD | TPP9X | | 21.55bk | 8.12bk | | | | | | | | |
| | Dedicated End Office Trunk Port Service-per DS0** | | | OHD | TDEOP | 0.00 | | | | | | | | | | |
| | Dedicated End Office Trunk Port Service-per DS1** | | | OH1 OH1MS | TDE1P | 0.00 | | | | | | | | | | |
| | Dedicated Tandem Trunk Port Service-per DS0** | | | OHD | TDWOP | 0.00 | | | | | | | | | | |
| | Dedicated Tandem Trunk Port Service-per DS1** | | | OH1 OH1MS | TDW1P | 0.00 | | | | | | | | | | |
| | ** This rate element is recovered on a per MOU basis and is included in the End Office Switching and Tandem Switching, per MOU rate elements | | | | | | | | | | | | | | | |
| | COMMON TRANSPORT (Shared) | | | | | | | | | | | | | | | |
| | Common Transport - Per Mile, Per MOU | | | OHD | | 0.00001 | | | | | | | | | | |
| | Common Transport - Facilities Termination Per MOU | | | OHD | | 0.00034 | | | | | | | | | | |
| LOCAL INTERCONNECTION (DEDICATED TRANSPORT) | | | | | | | | | | | | | | | | |
| | INTEROFFICE CHANNEL - DEDICATED TRANSPORT | | | | | | | | | | | | | | | |
| | Interoffice Channel - Dedicated Transport - 2-Wire Voice Grade - Per Mile per month | | | OHM | 1L5NF | 0.0282bk | | | | | | | | | | |
| | Interoffice Channel - Dedicated Transport- 2- Wire Voice Grade - Facility Termination per month | | | OHM | 1L5NF | 18bk | 137.48bk | 52.58bk | | | | | | | | |
| | Interoffice Channel - Dedicated Transport - 56 kbps - per mile per month | | | OHM | 1L5NK | 0.0282bk | | | | | | | | | | |
| | Interoffice Channel - Dedicated Transport - 56 kbps - Facility Termination per month | | | OHM | 1L5NK | 17.4bk | 137.48bk | 52.58bk | | | | | | | | |
| | Interoffice Channel - Dedicated Transport - 64 kbps - per mile per month | | | OHM | 1L5NK | 0.0282bk | | | | | | | | | | |
| | Interoffice Channel - Dedicated Transport - 64 kbps - Facility Termination per month | | | OHM | 1L5NK | 17.4bk | 137.48bk | 52.58bk | | | | | | | | |
| | Interoffice Channel - Dedicated Channel - DS1 - Per Mile per month | | | OH1, OH1MS | 1L5NL | 0.5753bk | | | | | | | | | | |
| | Interoffice Channel - Dedicated Tranport - DS1 - Facility Termination per month | | | OH1, OH1MS | 1L5NL | 71.29bk | 217.17bk | 163.75bk | | | | | | | | |
| | Interoffice Channel - Dedicated Transport - DS3 - Per Mile per month | | | OH3, OH3MS | 1L5NM | 12.98bk | | | | | | | | | | |
| | Interoffice Channel - Dedicated Transport - DS3 - Facility Termination per month | | | OH3, OH3MS | 1L5NM | 720.38bk | 794.94bk | 579.55bk | | | | | | | | |
| | LOCAL CHANNEL - DEDICATED TRANSPORT | | | | | | | | | | | | | | | |
| | Local Channel - Dedicated - 2-Wire Voice Grade per month | | | OHM | TEFV2 | 11.24bk | 553.8bk | 89.69bk | | | | | | | | |
| | Local Channel - Dedicated - 4-Wire Voice Grade per month | | | OHM | TEFV4 | 12.03bk | 562.23bk | 92.67bk | | | | | | | | |
| | Local Channel - Dedicated - DS1 per month | | | OH1 | TEFHG | 27.05bk | 534.48bk | 462.69bk | | | | | | | | |
| | Local Channel - Dedicated - DS3 Facility Termination per month | | | OH3 | TEFHJ | 298.92bk | 438.46bk | 256.3bk | | | | | | | | |
| | LOCAL INTERCONNECTION MID-SPAN MEET | | | | | | | | | | | | | | | |
| | NOTE: If Access service ride Mid-Span Meet, one-half the tariffed service Local Channel rate is applicable. | | | | | | | | | | | | | | | |
| | Local Channel - Dedicated - DS1 per month | | | OH1MS | TEFHG | 0.00 | 0.00 | | | | | | | | | |
| | Local Channel - Dedicated - DS3 per month | | | OH3MS | TEFHJ | 0.00 | 0.00 | | | | | | | | | |
| | MULTIPLEXERS | | | | | | | | | | | | | | | |
| | Channelization - DS1 to DS0 Channel System | | | OH1, OH1MS | SATN1 | 146.69bk | 197.78bk | 140.06bk | | | | | | | | |
| | DS3 to DS1 Channel System per month | | | OH3, OH3MS | SATNS | 233.1bk | 403.97bk | 234.4bk | | | | | | | | |
| | DS3 Interface Unit (DS1 COCI) per month | | | OH1, OH1MS | SATCO | 16.07bk | 13.09bk | 9.38bk | | | | | | | | |

| LOCAL INTERCONNECTION - South Carolina | | | | | | | | | | | | | | Attachment: 3 | | Exhibit: A | |
|---|---|---|---|---|---|---|---|---|---|---|---|---|---|---|---|---|---|
| CATEGORY | RATE ELEMENTS | Interim | Zone | BCS | USOC | RATES ($) | | | | | Svc Order Submitted Elec per LSR | Svc Order Submitted Manually per LSR | Incremental Charge - Manual Svc Order vs. Electronic-1st | Incremental Charge - Manual Svc Order vs. Electronic-Add'l | Incremental Charge - Manual Svc Order vs. Electronic-Disc 1st | Incremental Charge - Manual Svc Order vs. Electronic-Disc Add'l |
| | | | | | | Rec | Nonrecurring | | Nonrecurring Disconnect | | OSS Rates ($) | | | | | |
| | | | | | | | First | Add'l | First | Add'l | SOMEC | SOMAN | SOMAN | SOMAN | SOMAN | SOMAN |
| LOCAL INTERCONNECTION (CALL TRANSPORT AND TERMINATION) | | | | | | | | | | | | | | | | |
| | NOTE: "bk" beside a rate indicates that the Parties have agreed to bill and keep for that element pursuant to the terms and conditions in Attachment 3. | | | | | | | | | | | | | | | |
| | INTERCARRIER COMPENSATION FOR ISP-BOUND TRAFFIC AND LOCAL TRAFFIC | | | | | | | | | | | | | | | |
| | Single Rate for ISP-Bound Traffic and Local Traffic, per MOU | | | | | 0.0007 | | | | | | | | | | |
| | INTERCARRIER COMPENSATION FOR LOCAL TRANSIT TRAFFIC AND MTA TRAFFIC | | | | | | | | | | | | | | | |
| | TANDEM SWITCHING | | | | | | | | | | | | | | | |
| | Tandem Switching Function Per MOU | | | OHD | | 0.000736 | | | | | | | | | | |
| | Multiple Tandem Switching, per MOU (applies to intial tandem only) | | | OHD | | 0.000736 | | | | | | | | | | |
| | Tandem Intermediary Charge, per MOU* | | | OHD | | 0.0015 | | | | | | | | | | |
| | * This charge is applicable only to transit traffic and is applied in addition to applicable switching and/or interconnection charges. | | | | | | | | | | | | | | | |
| | TRUNK CHARGE | | | | | | | | | | | | | | | |
| | Installation Trunk Side Service - per DS0 | | | OHD | TPP6X | | 21.65bk | 8.16bk | | | | | | | | |
| | Installation Trunk Side Service - per DS0 | | | OHD | TPP9X | | 21.65bk | 8.16bk | | | | | | | | |
| | Dedicated End Office Trunk Port Service-per DS0** | | | OHD | TDEOP | 0.00 | | | | | | | | | | |
| | Dedicated End Office Trunk Port Service-per DS1** | | | OH1 OH1MS | TDE1P | 0.00 | | | | | | | | | | |
| | Dedicated Tandem Trunk Port Service-per DS0** | | | OHD | TDWOP | 0.00 | | | | | | | | | | |
| | Dedicated Tandem Trunk Port Service-per DS1** | | | OH1 OH1MS | TDW1P | 0.00 | | | | | | | | | | |
| | ** This rate element is recovered on a per MOU basis and is included in the End Office Switching and Tandem Switching, per MOU rate elements | | | | | | | | | | | | | | | |
| | COMMON TRANSPORT (Shared) | | | | | | | | | | | | | | | |
| | Common Transport - Per Mile, Per MOU | | | OHD | | 0.0000045 | | | | | | | | | | |
| | Common Transport - Facilities Termination Per MOU | | | OHD | | 0.0004095 | | | | | | | | | | |
| LOCAL INTERCONNECTION (DEDICATED TRANSPORT) | | | | | | | | | | | | | | | | |
| | INTEROFFICE CHANNEL - DEDICATED TRANSPORT | | | | | | | | | | | | | | | |
| | Interoffice Channel - Dedicated Transport - 2-Wire Voice Grade - Per Mile per month | | | OHM | 1L5NF | 0.0167bk | | | | | | | | | | |
| | Interoffice Channel - Dedicated Transport- 2- Wire Voice Grade - Facility Termination per month | | | OHM | 1L5NF | 24.3bk | 40.63bk | 27.47bk | 16.77bk | 6.91bk | | | | | | |
| | Interoffice Channel - Dedicated Transport - 56 kbps - per mile per month | | | OHM | 1L5NK | 0.0167bk | | | | | | | | | | |
| | Interoffice Channel - Dedicated Transport - 56 kbps - Facility Termination per month | | | OHM | 1L5NK | 16.76bk | 40.63bk | 27.47bk | 16.77bk | 6.91bk | | | | | | |
| | Interoffice Channel - Dedicated Transport - 64 kbps - per mile per month | | | OHM | 1L5NK | 0.0167bk | | | | | | | | | | |
| | Interoffice Channel - Dedicated Transport - 64 kbps - Facility Termination per month | | | OHM | 1L5NK | 16.76bk | 40.63bk | 27.47bk | 16.77bk | 6.91bk | | | | | | |
| | Interoffice Channel - Dedicated Channel - DS1 - Per Mile per month | | | OH1, OH1MS | 1L5NL | 0.3415bk | | | | | | | | | | |
| | Interoffice Channel - Dedicated Tranport - DS1 - Facility Termination per month | | | OH1, OH1MS | 1L5NL | 77.14bk | 89.47bk | 81.99bk | 16.39bk | 14.48bk | | | | | | |
| | Interoffice Channel - Dedicated Transport - DS3 - Per Mile per month | | | OH3, OH3MS | 1L5NM | 8.02bk | | | | | | | | | | |
| | Interoffice Channel - Dedicated Transport - DS3 - Facility Termination per month | | | OH3, OH3MS | 1L5NM | 880.65bk | 279.37bk | 163.12bk | 60.33bk | 58.59bk | | | | | | |
| | LOCAL CHANNEL - DEDICATED TRANSPORT | | | | | | | | | | | | | | | |
| | Local Channel - Dedicated - 2-Wire Voice Grade per month | | | OHM | TEFV2 | 15.33bk | 193.53bk | 33.24bk | 36.72bk | 3.21bk | | | | | | |
| | Local Channel - Dedicated - 4-Wire Voice Grade per month | | | OHM | TEFV4 | 16.54bk | 193.97bk | 33.68bk | 37.19bk | 3.68bk | | | | | | |
| | Local Channel - Dedicated - DS1 per month | | | OH1 | TEFHG | 42.62bk | 177.87bk | 154.06bk | 22.24bk | 15.3bk | | | | | | |
| | Local Channel - Dedicated - DS3 Facility Termination per month | | | OH3 | TEFHJ | 446bk | 452.52bk | 264.53bk | 119.75bk | 83.77bk | | | | | | |
| | LOCAL INTERCONNECTION MID-SPAN MEET | | | | | | | | | | | | | | | |
| | NOTE: If Access service ride Mid-Span Meet, one-half the tariffed service Local Channel rate is applicable. | | | | | | | | | | | | | | | |
| | Local Channel - Dedicated - DS1 per month | | | OH1MS | TEFHG | 0.00 | 0.00 | | | | | | | | | |
| | Local Channel - Dedicated - DS3 per month | | | OH3MS | TEFHJ | 0.00 | 0.00 | | | | | | | | | |
| | MULTIPLEXERS | | | | | | | | | | | | | | | |
| | Channelization - DS1 to DS0 Channel System | | | OH1, OH1MS | SATN1 | 107.57bk | 91.24bk | 62.71bk | 10.56bk | 9.81bk | | | | | | |
| | DS3 to DS1 Channel System per month | | | OH3, OH3MS | SATNS | 144.02bk | 178.54bk | 94.18bk | 33.33bk | 31.9bk | | | | | | |
| | DS3 Interface Unit (DS1 COCI) per month | | | OH1, OH1MS | SATCO | 8.64bk | 6.59bk | 4.73bk | | | | | | | | |

| LOCAL INTERCONNECTION - Tennessee | | | | | | | | | | | | | | Attachment: 3 | | Exhibit: A | |
|---|---|---|---|---|---|---|---|---|---|---|---|---|---|---|---|---|---|
| CATEGORY | RATE ELEMENTS | Interim | Zone | BCS | USOC | RATES ($) | | | | | Svc Order Submitted Elec per LSR | Svc Order Submitted Manually per LSR | Incremental Charge - Manual Svc Order vs. Electronic-1st | Incremental Charge - Manual Svc Order vs. Electronic-Add'l | Incremental Charge - Manual Svc Order vs. Electronic-Disc 1st | Incremental Charge - Manual Svc Order vs. Electronic-Disc Add'l |
| | | | | | | Rec | Nonrecurring | | Nonrecurring Disconnect | | OSS Rates ($) | | | | | |
| | | | | | | | First | Add'l | First | Add'l | SOMEC | SOMAN | SOMAN | SOMAN | SOMAN | SOMAN |
| LOCAL INTERCONNECTION (CALL TRANSPORT AND TERMINATION) | | | | | | | | | | | | | | | | |
| | NOTE: "bk" beside a rate indicates that the Parties have agreed to bill and keep for that element pursuant to the terms and conditions in Attachment 3. | | | | | | | | | | | | | | | |
| | INTERCARRIER COMPENSATION FOR ISP-BOUND TRAFFIC AND LOCAL TRAFFIC | | | | | | | | | | | | | | | |
| | Single Rate for ISP-Bound Traffic and Local Traffic, per MOU | | | | | 0.0007 | | | | | | | | | | |
| | INTERCARRIER COMPENSATION FOR LOCAL TRANSIT TRAFFIC AND MTA TRAFFIC | | | | | | | | | | | | | | | |
| | TANDEM SWITCHING | | | | | | | | | | | | | | | |
| | Tandem Switching Function Per MOU | | | OHD | | 0.0009778 | | | | | | | | | | |
| | Multiple Tandem Switching, per MOU (applies to intial tandem only) | | | OHD | | 0.0009778 | | | | | | | | | | |
| | Tandem Intermediary Charge, per MOU* | | | OHD | | 0.0015 | | | | | | | | | | |
| | * This charge is applicable only to transit traffic and is applied in addition to applicable switching and/or interconnection charges. | | | | | | | | | | | | | | | |
| | TRUNK CHARGE | | | | | | | | | | | | | | | |
| | Installation Trunk Side Service - per DS0 | | | OHD | TPP6X | | 21.59bk | 8.09bk | | | | | | | | |
| | Installation Trunk Side Service - per DS0 | | | OHD | TPP9X | | 21.59bk | 8.09bk | | | | | | | | |
| | Dedicated End Office Trunk Port Service-per DS0** | | | OHD | TDEOP | 0.00 | | | | | | | | | | |
| | Dedicated End Office Trunk Port Service-per DS1** | | | OH1 OH1MS | TDE1P | 0.00 | | | | | | | | | | |
| | Dedicated Tandem Trunk Port Service-per DS0** | | | OHD | TDWOP | 0.00 | | | | | | | | | | |
| | Dedicated Tandem Trunk Port Service-per DS1** | | | OH1 OH1MS | TDW1P | 0.00 | | | | | | | | | | |
| | ** This rate element is recovered on a per MOU basis and is included in the End Office Switching and Tandem Switching, per MOU rate elements | | | | | | | | | | | | | | | |
| | COMMON TRANSPORT (Shared) | | | | | | | | | | | | | | | |
| | Common Transport - Per Mile, Per MOU | | | OHD | | 0.0000064 | | | | | | | | | | |
| | Common Transport - Facilities Termination Per MOU | | | OHD | | 0.0003871 | | | | | | | | | | |
| LOCAL INTERCONNECTION (DEDICATED TRANSPORT) | | | | | | | | | | | | | | | | |
| | INTEROFFICE CHANNEL - DEDICATED TRANSPORT | | | | | | | | | | | | | | | |
| | Interoffice Channel - Dedicated Transport - 2-Wire Voice Grade - Per Mile per month | | | OHM | 1L5NF | 0.0174bk | | | | | | | | | | |
| | Interoffice Channel - Dedicated Transport- 2- Wire Voice Grade - Facility Termination per month | | | OHM | 1L5NF | 18.58bk | 55.39bk | 17.37bk | 27.96bk | 3.51bk | | | | | | |
| | Interoffice Channel - Dedicated Transport - 56 kbps - per mile per month | | | OHM | 1L5NK | 0.0174bk | | | | | | | | | | |
| | Interoffice Channel - Dedicated Transport - 56 kbps - Facility Termination per month | | | OHM | 1L5NK | 17.98bk | 55.39bk | 17.37bk | 27.96bk | 3.51bk | | | | | | |
| | Interoffice Channel - Dedicated Transport - 64 kbps - per mile per month | | | OHM | 1L5NK | 0.0174bk | | | | | | | | | | |
| | Interoffice Channel - Dedicated Transport - 64 kbps - Facility Termination per month | | | OHM | 1L5NK | 17.98bk | 55.39bk | 17.37bk | 27.96bk | 3.51bk | | | | | | |
| | Interoffice Channel - Dedicated Channel - DS1 - Per Mile per month | | | OH1, OH1MS | 1L5NL | 0.3562bk | | | | | | | | | | |
| | Interoffice Channel - Dedicated Tranport - DS1 - Facility Termination per month | | | OH1, OH1MS | 1L5NL | 77.86bk | 112.4bk | 76.27bk | 19.55bk | 14.99bk | | | | | | |
| | Interoffice Channel - Dedicated Transport - DS3 - Per Mile per month | | | OH3, OH3MS | 1L5NM | 2.34bk | | | | | | | | | | |
| | Interoffice Channel - Dedicated Transport - DS3 - Facility Termination per month | | | OH3, OH3MS | 1L5NM | 848.99bk | 395.29bk | 176.56bk | 109.04bk | 105.91bk | | | | | | |
| | LOCAL CHANNEL - DEDICATED TRANSPORT | | | | | | | | | | | | | | | |
| | Local Channel - Dedicated - 2-Wire Voice Grade per month | | | OHM | TEFV2 | 19.43bk | 199.33bk | 24.16bk | 54.81bk | 4.8bk | | | | | | |
| | Local Channel - Dedicated - 4-Wire Voice Grade per month | | | OHM | TEFV4 | 20.56bk | 201.53bk | 24.83bk | 55.52bk | 5.51bk | | | | | | |
| | Local Channel - Dedicated - DS1 per month | | | OH1 | TEFHG | 40.99bk | 277.35bk | 233.26bk | 33.18bk | 22.3bk | | | | | | |
| | Local Channel - Dedicated - DS3 Facility Termination per month | | | OH3 | TEFHJ | 611.3bk | 595.37bk | 304.5bk | 215.82bk | 151.15bk | | | | | | |
| | LOCAL INTERCONNECTION MID-SPAN MEET | | | | | | | | | | | | | | | |
| | NOTE: If Access service ride Mid-Span Meet, one-half the tariffed service Local Channel rate is applicable. | | | | | | | | | | | | | | | |
| | Local Channel - Dedicated - DS1 per month | | | OH1MS | TEFHG | 0.00 | 0.00 | | | | | | | | | |
| | Local Channel - Dedicated - DS3 per month | | | OH3MS | TEFHJ | 0.00 | 0.00 | | | | | | | | | |
| | MULTIPLEXERS | | | | | | | | | | | | | | | |
| | Channelization - DS1 to DS0 Channel System | | | OH1, OH1MS | SATN1 | 80.77bk | 141.87bk | 77.11bk | 44.47bk | 42.62bk | | | | | | |
| | DS3 to DS1 Channel System per month | | | OH3, OH3MS | SATNS | 222.98bk | 308.03bk | 108.47bk | 6.34bk | 4.23bk | | | | | | |
| | DS3 Interface Unit (DS1 COCI) per month | | | OH1, OH1MS | SATCO | 17.58bk | 6.07bk | 4.66bk | | | | | | | | |
| | Notes: If no rate is identified in the contract, the rates, terms, and conditions for the specific service or function will be as set forth in applicable BellSouth tariff. | | | | | | | | | | | | | | | |

**Amendment**
**To the**
**Interconnection Agreement**
**Between**
**Level 3 Communications, L.L.C.**
**and**
**BellSouth Telecommunications, Inc.**
**Dated June 23, 2004**

Pursuant to this Amendment, (the "Amendment"), Level 3 Communications, L.L.C. (Level 3), and BellSouth Telecommunications, Inc. ("BellSouth"), hereinafter referred to collectively as the "Parties," hereby agree to amend that certain Interconnection Agreement between the Parties dated June 23, 2004 ("Agreement") to be effective the date of the last signature executing this Amendment.

WHEREAS, BellSouth and Level 3 entered into the Agreement on June 23, 2004, and;

WHEREAS, BellSouth and Level 3 are amending the Agreement to modify Local Number Portability (LNP) recovery charge pursuant to the Order in the matter of the Telephone Number Portability BellSouth Corporation Petition for Declaratory Ruling and/or Waiver, CC Docket No. 95-116, released April 13, 2004;

NOW, THEREFORE, in consideration of the mutual provisions contained herein and other good and valuable consideration, the receipt and sufficiency of which are hereby acknowledged, the Parties hereby covenant and agree as follows:

1. The Parties agree to delete in their entirety all rate elements and USOCs identified as "Local Number Portability charges" in Exhibit A of Attachment 2, as specified by the following USOCs: LNPCX, LNPCP, LNPCN, and LNPCC.

2. The Parties agree to add the following language to Section 4 as Section 4.1.1 of Attachment 2 and Section 5 as Section 5.4.5 of Attachment 2:

    - In addition to other charges specified in this Agreement for Local Number Portability Level 3 shall pay to BellSouth the Local Number Portability charges as set forth in Section 13 of the BellSouth FCC No. 1 Tariff;

3. All of the other provisions of the Agreement dated June 23, 2004 shall remain unchanged and in full force and effect.

4. Either or both of the Parties are authorized to submit this Amendment to the respective state regulatory authorities for approval subject to Section 252(e) of the Federal Telecommunications Act of 1996.

LNP Recovery Amendment
Signature Page

IN WITNESS WHEREOF, the Parties have executed this Agreement the day and year written below.

**BellSouth Telecommunications, Inc.**

By: _____

Name: Kristen E. Rowe

Title: Director

Date: 9/3/04

**Level 3 Communications, L.L.C.**

By: _____

Name: LaCharles P. Keesee II

Title: VP - Wholesale Voice Services

Date: 8/9/2004

Version 3Q03: 11/12/2003

[CCCS Amendment 2 of 2]

**Amendment to the Agreement**
**Between**
**Level 3 Communications, L.L.C.**
**and**
**BellSouth Telecommunications, Inc.**
**Dated June 23, 2004**

Pursuant to this Amendment, (the "Amendment"), Level 3 Communications, L.L.C. ("Level 3"), and BellSouth Telecommunications, Inc. ("BellSouth"), hereinafter referred to collectively as the "Parties," hereby agree to amend that certain Interconnection Agreement between the Parties effective June 23, 2004 ("Agreement") to be effective on the date of the last signature executing the Amendment ("Effective Date").

In consideration of the mutual provisions contained herein and other good and valuable consideration, the receipt and sufficiency of which are hereby acknowledged, the Parties hereby covenant and agree as follows:

1. The Parties agree that the following will be effective February 28, 2005:

   A. The Parties agree to delete Section 7.5.1.3 and Section 7.5.1.4 of Attachment 3 of the Agreement.

   B. The Parties agree to delete Section 7.5.1.2 in its entirety and replace with the following:

      7.5.1.2 The Parties have been unable to agree as to whether computer-to-phone and phone-to-computer -VOIP transmissions which cross different local calling area boundaries constitute Switched Access Traffic ("Disputed VoIP"). Notwithstanding the foregoing, and without waiving any rights with respect to either Party's position as to the jurisdictional nature of Disputed VOIP, the Parties agree to abide by any effective and applicable FCC rules and orders regarding the nature of such traffic and the compensation payable by the Parties for such traffic, if any. Except as otherwise provided for in this agreement, neither Party will take any action to disconnect, impair, block, fail to provision, fail to support or otherwise degrade the quality of Disputed VoIP.

2. All of the other provisions of the Agreement shall remain in full force and effect.

3. Either or both of the Parties are authorized to submit this Amendment to the respective state regulatory authorities for approval subject to Section 252(e) of the Federal Telecommunications Act of 1996.

IN WITNESS WHEREOF, the Parties have executed this Amendment the day and year written below.

**BellSouth Telecommunications, Inc.**

By: _____

Name: Kristen Rowe

Title: Director

Date: 3/14/05

**Level 3 Communications, L.L.C.**

By: _____

Name: Andrea L. Cavalas

Title: VP, Interconnection Services

Date: 3/8/05

Version: Generic Amendment Template
XX/XX/XX

**Amendment to the Agreement**
**Between**
**Level 3 Communications, L.L.C.**
**and**
**BellSouth Telecommunications, Inc.**
**Dated June 23, 2004**

Pursuant to this Amendment, (the "Amendment"), Level 3 Communications, L.L.C. (Level 3), and BellSouth Telecommunications, Inc. (BellSouth), hereinafter referred to collectively as the "Parties", hereby agree to amend that certain Interconnection Agreement between the Parties dated June 23, 2004 (Agreement).

WHEREAS, on February 7, 2006, the Florida Public Service Commission rendered its decision in Docket No. 041269-TP, Petition to Establish Generic Docket to Consider Amendments to Interconnection Agreements Resulting from Change of Law (Decision); and

WHEREAS, on February 28, 2006, the Florida Public Service Commission voted to approve Staff's February 17, 2006 Recommendation to vacate its prior Decision only as to issues 5, 13, 16, 17, 18, and 22b; and

WHEREAS, on April 17, 2006, the Florida Public Service Commission issued its Second Order On Generic Proceeding in Docket No. 041269-TP ORDER NO. PSC-06-0299-FOF-TP, Petition to Establish Generic Docket to Consider Amendments to Interconnection Agreements Resulting from Change of Law (Second Order), rendering decisions on the issues previously vacated; and

WHEREAS, the Parties desire to amend the Agreement to incorporate the Decision and the Second Order;

NOW, THEREFORE, in consideration of the mutual provisions contained herein and other good and valuable consideration, the receipt and sufficiency of which are hereby acknowledged, the Parties hereby covenant and agree as follows:

1. The Parties hereby agree to incorporate into the Agreement the contract provisions set forth in Exhibit A hereto, and such contract provisions shall apply to services provided in the State of Florida only.

2. The Parties hereby agree to incorporate into the Agreement the rates set forth in Exhibit B hereto, and such rates shall apply to services provided in the State of Florida only.

3. To the extent that such contract provisions or rates as set forth in Exhibits A and B hereto conflict with any other rates, terms and conditions in the Agreement, the contract provisions and rates in Exhibits A and B shall prevail in the State of Florida.

4. Further, to the extent that defined terms in this Amendment differ from defined terms in the Agreement, such defined terms in the Agreement shall be deemed to have the same meaning as the alternative defined terms in this Amendment to the extent necessary to give full effect to this Amendment consistent with the Florida Commission's Decision and Second Order.

5. This Amendment shall be approved on the date the Florida Public Service Commission issues an order approving the Amendment (Approved Date) and shall be deemed effective on March 11, 2006 (Effective Date).

6. All of the other provisions of the Agreement shall remain in full force and effect.

7. Either or both of the Parties is authorized to submit this Amendment to the Florida Public Service Commission for approval subject to Section 252(e) of the Federal Telecommunications Act of 1996.

IN WITNESS WHEREOF, the Parties have executed this Amendment the day and year written below.

**BellSouth Telecommunications, Inc.**

By: Kristen E. Shore

Name: Kristen E. Shore

Title: Director

Date: 6/19/06

**Level 3 Communications, L.L.C.**

By:

Name: Andrew Gavalas

Title: Vice President

Date: 6/15/06

Version: FL COL Amendment
CLEC with Line Sharing and No CA
04/27/06

1. Transition for DS1 and DS3 Loops

1.1 For purposes of this Section 1, the Transition Period for the Embedded Base of DS1 and DS3 Loops and for the Excess DS1 and DS3 Loops is the twelve (12) month period beginning March 11, 2005 and ending March 10, 2006.

1.2 For purposes of this Section 1, Embedded Base means DS1 and DS3 Loops that were in service for Level 3 as of March 11, 2005, in those wire centers that, as of such date, met the criteria set forth in Section 1.4.1 and 1.4.2. Subsequent disconnects or loss of End Users shall be removed from the Embedded Base.

1.3 Excess DS1 and DS3 Loops are those Level 3 DS1 and DS3 Loops in service as of March 11, 2005, in excess of the caps set forth in Sections 1.3.1 and 1.3.2 below, respectively. Subsequent disconnects or loss of End Users shall be removed from Excess DS1 and DS3 Loops.

1.3.1 BellSouth shall not provide more than ten (10) unbundled DS1 Loops to Level 3 at any single building in which DS1 Loops are available as unbundled loops.

1.3.2 Level 3 may obtain a maximum of a single Unbundled DS3 loop to any single building in which DS3 Loops are available as Unbundled Loops.

1.4 Notwithstanding anything to the contrary in this Agreement, and except as set forth in Section 13, BellSouth shall make available DS1 and DS3 Loops only for Level 3's Embedded Base during the Transition Period:

1.4.1 DS1 Loops to any Building served by a wire center containing 60,000 or more Business Lines and four (4) or more fiber-based collocators (DS1 Threshold).

1.4.2 DS3 Loops to any Building served by a wire center containing 38,000 or more Business Lines and four (4) or more fiber-based collocators (DS3 Threshold).

1.5 The initial list of wire centers (Initial Wire Center List) meeting the criteria set forth in Sections 1.4.1 and 1.4.2 above, is set forth in Section 7.1.4 hereto. As of the effective date of this Amendment, no self-certification in any wire center set forth in the Initial Wire Center List is permitted.

1.6 Transition Period Pricing. From March 11, 2005, through the completion of the Transition Period, BellSouth shall charge a rate for Level 3's Embedded Base and Level 3's Excess DS1 and DS3 Loops equal to the higher of:

1.6.1 115% of the rate paid for that element on June 15, 2004; or

1.6.2 115% of a new rate the Commission establishes, if any, between June 16, 2004 and March 11, 2005.

1.6.3 These rates shall be as set forth in Exhibit A to Attachment 2 of the Agreement and this Section 1.6.

1.7 The Transition Period shall apply only to (1) Level 3's Embedded Base and (2) Level 3's Excess DS1 and DS3 Loops. Level 3 shall not add new DS1 or DS3 loops pursuant to this Agreement.

1.8 Level 3 shall provide spreadsheets to BellSouth no later than March 10, 2006, identifying the specific DS1 and DS3 Loops, including the Embedded Base and Excess DS1 and DS3 Loops to be either (1) disconnected and transitioned to wholesale facilities obtained from other carriers or self-provisioned facilities; or (2) converted to other available UNE Loops or other wholesale facilities provided by BellSouth, including special access. For Conversions as defined in Section 17, such spreadsheets shall take the place of an LSR or ASR. The Parties shall negotiate a project schedule for the Conversion of the Embedded Base and Excess DS1 and DS3 Loops. If a Level 3 chooses to convert the DS1 and DS3 UNE Loops to special access circuits, BellSouth will include such DS1 and DS3 Loops once converted within Level 3's total special access circuits and apply any discounts to which Level 3 is entitled.

1.8.1 If Level 3 submits the spreadsheet(s) for its Embedded Base and Excess DS1 and DS3 Loops on or before March 10, 2006, those identified circuits shall be subject to the Commission-approved switch-as-is conversion nonrecurring charges and no UNE disconnect charges.

1.8.2 If Level 3 fails to submit the spreadsheet(s) for its Embedded Base and Excess DS1 and DS3 Loops on or before March 10, 2006, BellSouth will identify and transition such circuits to the equivalent wholesale services provided by BellSouth. Those circuits identified and transitioned by BellSouth pursuant to this Section shall be subject to all applicable UNE disconnect charges as set forth in this Agreement and the full nonrecurring charges for installation of the equivalent tariffed BellSouth service as set forth in BellSouth's tariffs.

1.9 For Embedded Base circuits and Excess DS1 and DS3 Loops converted, the applicable recurring tariff charge shall apply to each circuit as of March 11, 2006. The transition of the Embedded Base and Excess DS1 and DS3 Loops should be performed in a manner that avoids, or otherwise minimizes to the extent possible, disruption or degradation to Level 3's customers' service.

2. Dark Fiber Loop

2.1 Dark Fiber Loop is an unused optical transmission facility, without attached signal regeneration, multiplexing, aggregation or other electronics, from the demarcation point at an End User's premises to the End User's serving wire center. Dark Fiber Loops may be strands of optical fiber existing in aerial or underground structure. BellSouth will not provide line terminating elements, regeneration or other electronics necessary for Level 3 to utilize Dark Fiber Loops.

2.2 Transition for Dark Fiber Loop

2.2.1 For purposes of this Section 2.2, the Transition Period for Dark Fiber Loops is the eighteen (18) month period beginning March 11, 2005 and ending September 10, 2006.

2.2.2 For purposes of this Section 2.2, Embedded Base means Dark Fiber Loops that were in service for Level 3 as of March 11, 2005. Subsequent disconnects or loss of End Users shall be removed from the Embedded Base.

2.2.3 During the Transition Period only, BellSouth shall make available for the Embedded Base Dark Fiber Loops for Level 3 at the terms and conditions set forth in this Attachment.

2.2.4 Transition Period Pricing. From March 11, 2005, through the completion of the Transition Period, BellSouth shall charge a rate for Level 3's Embedded Base of Dark Fiber Loops equal to the higher of:

2.2.4.1 115% of the rate paid for that element on June 15, 2004; or

2.2.4.2 115% of a new rate the Commission establishes, if any, between June 16, 2004 and March 11, 2005.

2.2.4.3 These rates shall be as set forth in Exhibit A to Attachment 2 of the Agreement and this Section 2.2.4.

2.2.4.4 The Transition Period shall apply only to Level 3's Embedded Base and Level 3 shall not add new Dark Fiber Loops pursuant to this Agreement.

2.2.5 Effective September 11, 2006, Dark Fiber Loops will no longer be made available pursuant to this Agreement.

2.2.6 Level 3 shall provide spreadsheets to BellSouth no later than September 10, 2006, identifying the specific Dark Fiber Loops, to be either disconnected or converted to other BellSouth services. Level 3 may transition from Dark Fiber Loops to other available wholesale facilities provided by BellSouth, including special access, wholesale facilities obtained from other carriers, or self-provisioned facilities. For Conversions as defined in Section 17, such spreadsheets shall take the place of an LSR or ASR. The Parties shall negotiate a project schedule for the Conversion of the Embedded Base Dark Fiber Loops. If Level 3 chooses to convert the Dark Fiber UNE Loops to special access circuits, BellSouth will include such Dark Fiber Loops once converted within Level 3's total special access circuits and apply any discounts to which Level 3 is entitled.

2.2.6.1 If Level 3 submits the spreadsheets specified in Section 2.2.6 above for all of its Embedded Base on or before September 10, 2006, Conversions shall be subject to Commission-approved switch-as-is charges and no UNE disconnect charges.

2.2.6.2 If Level 3 fails to submit the spreadsheet(s) specified in Section 2.2.6 above for all of its Embedded Base on or before September 10, 2006, BellSouth will identify Level 3's remaining Embedded Base, if any, and will transition such circuits to the equivalent tariffed BellSouth service(s). Those circuits identified and transitioned by BellSouth pursuant to this Section 2.2.6.2 shall be subject to all applicable disconnect charges as set forth in this Agreement and the full nonrecurring charges for installation of the equivalent tariffed BellSouth service as set forth in BellSouth's tariffs.

2.2.6.3 For Embedded Base circuits converted or transitioned, the applicable recurring tariff charge shall apply to each circuit as of September 11, 2006. The transition of the Embedded Base circuits should be performed in a manner that avoids, or otherwise minimizes to the extent possible, disruption or degradation to Level 3's customers' service.

3. Local Switching

3.1 Notwithstanding anything to the contrary in this Agreement, the services offered pursuant to this Section 3 are limited to DS0 level Local Switching and BellSouth is not required to provide Local Switching pursuant to this Agreement except as set forth in Section 3.3 below.

3.2 BellSouth shall not be required to unbundle local circuit switching for Level 3 for a particular End User when Level 3: (1) serves an End User with four (4) or more voice-grade (DS0) equivalents or lines served by BellSouth in Zone 1 of the following MSAs: Miami, FL; Orlando, FL; and Ft. Lauderdale, FL; or (2) serves an End User with a DS1 or higher capacity Loop in any service area covered by this Agreement. To the extent that Level 3 is serving any End User as described above as of the Effective Date of this Agreement, such End User's arrangement may not remain in place and such Arrangement must be terminated by Level 3 or transitioned by Level 3, or BellSouth shall disconnect such Arrangements upon thirty (30) days notice.

3.3 Transition for Local Switching

3.3.1 For purposes of this Section 3, the Transition Period for the Embedded Base of Local Switching is the twelve (12) month period beginning March 11, 2005 and ending March 10, 2006.

3.3.2 For the purposes of this Section 3.3, Embedded Base shall mean Local Switching and any additional elements that are required to be provided in conjunction therewith that were in service for Level 3 as of March 11, 2005. Subsequent disconnects or loss of End Users shall be removed from the Embedded Base.

3.3.4 During the Transition Period only, BellSouth shall make Local Switching available for the Embedded Base, in addition to all elements (signaling networks, call-related databases, and shared transport) that are required to be provided in conjunction with

Local Switching, as such elements are defined at 47 C.F.R. §51.319(d)(4)(i), at the rates, terms and conditions set forth in this Section 3. The Transition Period shall apply only to Level 3's Embedded Base and Level 3 shall not place new orders for Local Switching pursuant to this Agreement.

3.3.5 Transition Period Pricing. From March 11, 2005, through the completion of the Transition Period, BellSouth shall charge a rate for Level 3's Embedded Base of Local Switching equal to the higher of:

3.3.5.1 The rate at which during Level 3 leased that combination of elements on June 15, 2004, plus one dollar; or

3.3.5.2 The rate the Commission established, if any, between June 16, 2004, and the effective date of the TRRO, plus one dollar.

3.3.5.3 These rates shall be as set forth in Exhibit A to Attachment 2 of the Agreement and this Section 3.3.5.

3.4. Level 3 must submit orders, to disconnect or convert all of its Embedded Base of Local Switching to other BellSouth services as Conversions on or before March 10, 2006. Level 3 may transition from these Local Switching elements to other available wholesale arrangements provided by BellSouth, wholesale facilities obtained from other carriers, or self-provisioned facilities. The Parties shall negotiate a project schedule for the Conversion of the Embedded Base of Local Switching.

3.4.1 If Level 3 submits the spreadsheets specified in Section 3.4 above for all of its Embedded Base on or before March 10, 2006, Conversions shall be subject to Commission-approved switch-as-is charges and no UNE disconnect charges.

3.4.2 If Level 3 fails to submit orders to disconnect or convert all of its Embedded Base of Local Switching on or before March 10, 2006, BellSouth will identify Level 3's remaining Embedded Base of Local Switching and will disconnect such Local Switching. Those circuits identified and disconnected by BellSouth shall be subject to the applicable UNE disconnect charges as set forth in this Agreement.

3.5 Effective March 11, 2006, Local Switching will no longer be made available pursuant to this Agreement.

3.6 The transition of the Embedded Base should be performed in a manner that avoids, or otherwise minimizes to the extent possible, disruption or degradation to Level 3's customers' service.

3.7 Notwithstanding any other provision of this Agreement, BellSouth will only provide unbundled access to Common (Shared) Transport to the extent BellSouth is required to provide and is providing Local Switching to Level 3.

4. UNE-P

4.1 DS0 Local Switching, in combination with a Loop and Common (Shared) Transport (UNE-P) provides local exchange service for the origination or termination of calls. UNE-P supports the same local calling and feature requirements as described in the Local Switching section of this Attachment and the ability to presubscribe to a primary carrier for intraLATA toll service and/or to presubscribe to a primary carrier for interLATA toll service.

4.2 Notwithstanding anything to the contrary in this Agreement, BellSouth is not required to provide UNE-P pursuant to this Agreement except as set forth in this Section.

4.3 Transition Period for UNE-P

4.3.1 For purposes of this Section 4, the Transition Period for UNE-P is the twelve (12) month period beginning March 11, 2005 and ending March 10, 2006.

4.3.2 For purposes of this Section 4.3, Embedded Base shall mean UNE-P and any additional elements that are required to be provided in conjunction with UNE-P (signaling networks, call-related databases, and shared transport), as such elements are defined at 47 C.F.R. §51.319(d)(4)(i), that were in service for Level 3 as of March 11, 2005. Subsequent disconnects or loss of End Users shall be removed from the Embedded Base.

4.3.3 During the Transition Period only, BellSouth shall make UNE-P available for the Embedded Base, in addition to all elements that are required to be provided in conjunction with UNE-P (signaling networks, call-related databases, and shared transport), as such elements are defined at 47 C.F.R. §51.319(d)(4)(i), at the rates, terms and conditions set forth in this Attachment. The Transition Period shall apply only to Level 3's Embedded Base and Level 3 shall not place new orders for UNE-P pursuant to this Agreement.

4.3.4 Transition Period Pricing. From March 11, 2005, through the completion of the Transition Period, BellSouth shall charge a rate for Level 3's Embedded Base of Local Switching equal to the higher of:

4.3.4.1 The rate at which during Level 3 leased that combination of elements on June 15, 2004, plus one dollar; or

4.3.4.2 The rate the Commission established, if any, between June 16, 2004, and the effective date of the TRRO, plus one dollar.

4.3.4.3 These rates shall be as set forth in Exhibit A to Attachment 2 of the Agreement and this Section 4.3.4.

4.3.5 Level 3 must submit orders or spreadsheets, or if converting to UNE Loops must use the Bulk Migration process, to either disconnect or convert all of its Embedded Base of UNE-P to other BellSouth services as Conversions on or before March 10, 2006.

Level 3 may transition from these UNE-P arrangements to other available wholesale arrangements provided by BellSouth, wholesale facilities obtained from other carriers, or self-provisioned facilities. The Parties shall negotiate a project schedule for the Conversion of the Embedded Base of UNE-P.

4.3.5.1 If Level 3 submits the orders or spreadsheets specified in Section 4.3.5 above for all of its Embedded Base on or before March 10, 2006, Conversions shall be subject to Commission-approved switch-as-is charges.

4.3.5.2 If Level 3 fails to submit orders or spreadsheets converting all of the Embedded Base of UNE-P on or before March 10, 2006, BellSouth will identify Level 3's remaining Embedded Base of UNE-P and will transition such UNE-P to resold BellSouth telecommunication services, as set forth in Attachment 1 to the Agreement. Those circuits identified and transitioned by BellSouth shall be subject to the applicable disconnect charges as set forth in this Agreement and the full nonrecurring charges for installation of such BellSouth services as set forth in BellSouth's tariffs.

4.3.5.3 For Embedded Base UNE-P converted or transitioned, the applicable recurring tariff charges shall apply as of March 11, 2006. The transition of the Embedded Base should be performed in a manner that avoids, or otherwise, minimizes to the extent possible, disruption or degradation to Level 3's customers' service.

4.3.6 Effective March 11, 2006, UNE-P will no longer be made available pursuant to this Agreement.

4.3.7 BellSouth shall make 911 updates in the BellSouth 911 database for Level 3's UNE-P. BellSouth will not bill Level 3 for 911 surcharges. Level 3 is responsible for paying all 911 surcharges to the applicable governmental agency.

5. Dedicated Transport and Dark Fiber Transport

5.1 Dedicated Transport. Dedicated Transport is defined as BellSouth's transmission facilities between wire centers or switches owned by BellSouth, or between wire centers or switches owned by BellSouth and switches owned by Level 3, including but not limited to DS1, DS3 and OCn level services, as well as dark fiber, dedicated to Level 3. BellSouth shall not be required to provide access to OCn level Dedicated Transport under any circumstances pursuant to this Agreement. In addition, except as set forth in Section 5.2, BellSouth shall not be required to provide to Level 3 unbundled access to interoffice transmission facilities that do not connect a pair of wire centers or switches owned by BellSouth ("Entrance Facilities").

5.2 Transition for DS1 and DS3 Dedicated Transport Including DS1 and DS3 Entrance Facilities

5.2.1 For purposes of this Section 5.2, the Transition Period for the Embedded Base of DS1 and DS3 Dedicated Transport, Embedded Base Entrance Facilities and for Excess

DS1 and DS3 Dedicated Transport, is the twelve (12) month period beginning March 11, 2005 and ending March 10, 2006.

5.2.2 For purposes of this Section 5.2, Embedded Base means DS1 and DS3 Dedicated Transport that were in service for Level 3 as of March 11, 2005 in those wire centers that, as of such date, met the criteria set forth in Sections 5.2.5.1 or 5.2.5.2 below. Subsequent disconnects or loss of End Users shall be removed from the Embedded Base.

5.2.3 For purposes of this Section 5.2, Embedded Base Entrance Facilities means Entrance Facilities that were in service for Level 3 as of March 11, 2005. Subsequent disconnects or loss of customers shall be removed from the Embedded Base.

5.2.4 For purposes of this Section 5.2, Excess DS1 and DS3 Dedicated Transport means those Level 3 DS1 and DS3 Dedicated Transport facilities in service as of March 11, 2005, in excess of the caps set forth in Section 5.2.5.3. Subsequent disconnects and loss of End Users shall be removed from Excess DS1 and DS3 Loops.

5.2.5 Notwithstanding anything to the contrary in this Agreement, BellSouth shall make available Dedicated Transport as described in this Section 5.2 only for Level 3's Embedded Base during the Transition Period:

5.2.5.1 DS1 Dedicated Transport where both wire centers at the end points of the route contain 38,000 or more Business Lines or four (4) or more fiber-based collocators. (Tier 1 Wire Center)

5.2.5.2 DS3 Dedicated Transport where both wire centers at the end points of the route contain 24,000 or more Business Lines or three (3) or more fiber-based collocators (Tier 2 Wire Center).

5.2.5.3 Level 3 may obtain a maximum of twelve (12) unbundled DS3 Dedicated Transport circuits on each route where DS3 Dedicated Transport is available as a Network Element, and a maximum of ten (10) unbundled DS1 Dedicated Transport circuits on each Route where there is no 251(c)(3) unbundling obligation for DS3 Dedicated Transport but for which impairment exists for DS1 Dedicated Transport.

5.2.6 The initial list of wire centers (Initial Wire Center List) meeting the criteria set forth in Sections 5.2.5.1 and 5.2.5.2 above, is set forth in Section 7.1.4 hereto. As of the effective date of this Amendment, no self-certification in any wire center set forth in the Initial Wire Center List is permitted.

5.2.7 Notwithstanding anything to the contrary in this Agreement, BellSouth shall make available Entrance Facilities only for <Level 3's Embedded Base Entrance Facilities and only during the Transition Period.

5.2.8 Transition Period Pricing. From March 11, 2005, through the completion of the Transition Period, BellSouth shall charge a rate for Level 3's Embedded Base of DS1

and DS3 Dedicated Transport and for Level 3's Excess DS1 and DS3 Dedicated Transport, as described in this Section 5.2, equal to the higher of:

5.2.8.1 115% of the rate paid for that element on June 15, 2004; or

5.2.8.2 115% of a new rate the Commission establishes, if any, between June 16, 2004 and March 11, 2005.

5.2.8.3 These rates shall be as set forth in Exhibit A to Attachment 2 of the Agreement and this Section 5.2.8.

5.2.8.4 From March 11, 2005, through the completion of the Transition Period, BellSouth shall charge a rate for Level 3's Embedded Base Entrance Facilities as set forth in Exhibit A to Attachment 2 of the Agreement and this Section 5.2.8.

5.2.9 The Transition Period shall apply only to (1) Level 3's Embedded Base circuits and Embedded Base Entrance Facilities; and (2) Level 3's Excess DS1 and DS3 Dedicated Transport. Level 3 shall not add new Entrance Facilities pursuant to this Agreement. Further, Level 3 shall not add new DS1 or DS3 Dedicated Transport as described in this Section 5.2 pursuant to this Agreement.

5.2.10 A wire center listed on the Initial Wire Center List exceeds either of the thresholds set forth in Sections 5.2.5.1 or 5.2.5.2. No further DS1 Dedicated Transport Unbundling will be required from that wire center to other Tier 1 wire centers.

5.2.11 A wire center listed on the Initial Wire Center List exceeds either of the thresholds set forth in Sections 5.2.5.1 or 5.2.5.2. No further DS3 Dedicated Transport unbundling will be required from that wire center to Tier 1 or Tier 2 wire centers.

5.2.12 No later than March 10, 2006 Level 3 shall submit spreadsheet(s) identifying all of the Embedded Base circuits, Embedded Base Entrance Facilities, and Excess DS1 and DS3 Dedicated Transport to be either disconnected or converted to other BellSouth services pursuant to Section 17. Level 3 may transition from these DS1 and DS3 Dedicated Transport, Entrance Facilities, and Excess DS1 and DS3 Dedicated Transport arrangements to other available wholesale arrangements provided by BellSouth, wholesale facilities obtained from other carriers, or self-provisioned facilities. For Conversions as defined in Section 17, such spreadsheet shall take the place of an LSR or ASR. If a Level 3 chooses to convert the DS1 and DS3 UNE Dedicated Transport circuits or UNE Entrance Facilities to special access circuits, BellSouth will include such DS1 and DS3 UNE Dedicated Transport circuits and UNE Entrance Facilities once converted within Level 3's total special access circuits and apply any discounts to which Level 3 is entitled. The Parties shall negotiate a project schedule for the Conversion of the Embedded Base, Embedded Base Entrance Facilities, and Excess DS1 and DS3 Dedicated Transport.

5.2.12.1 If Level 3 submits the spreadsheets specified in Section 5.2.12 above for all of its Embedded Base on or before March 10, 2006, Conversions shall be subject to Commission-approved switch-as-is charges.

5.2.12.2 If Level 3 fails to submit the spreadsheet(s) specified in Section 5.2.12 above for all of its Embedded Base circuits, Embedded Base Entrance Facilities and Excess DS1 and DS3 Dedicated Transport on or before March 10, 2006, BellSouth will identify Level 3's remaining Embedded Base circuits, Embedded Base Entrance Facilities and Excess DS1 and DS3 Dedicated Transport, if any, and will transition such circuits to the equivalent tariffed BellSouth service(s). Those circuits identified and transitioned by BellSouth shall be subject to all applicable disconnect charges as set forth in this Agreement and the full nonrecurring charges for installation of the equivalent tariffed BellSouth service as set forth in BellSouth's tariffs.

5.2.12.3 For Embedded Base circuits, Embedded Base Entrance Facilities and Excess DS1 and DS3 Dedicated Transport converted or transitioned, the applicable recurring tariff charge shall apply to each circuit as of March 11, 2006. The transition of the Embedded Base, Embedded Base Entrance Facilities and Excess DS1 and DS3 Dedicated Transport should be performed in a manner that avoids, or otherwise, minimizes to the extent possible, disruption or degradation to Level 3's customers' service.

5.3 Dark Fiber Transport. Dark Fiber Transport is defined as Dedicated Transport that consists of unactivated optical interoffice transmission facilities without attached signal regeneration, multiplexing, aggregation or other electronics. Except as set forth in Section 5.3.1 below, BellSouth shall not be required to provide access to Dark Fiber Transport Entrance Facilities pursuant to this Agreement.

5.3.1 Transition for Dark Fiber Transport and Dark Fiber Transport Entrance Facilities

5.3.2 For purposes of this Section 5.3, the Transition Period for the Embedded Base Dark Fiber Transport and Embedded Base Dark Fiber Entrance Facilities is the eighteen (18) month period beginning March 11, 2005 and ending September 10, 2006.

5.3.3 For purposes of this Section 5.3, Embedded Base means Dark Fiber Transport that was in service for Level 3 as of March 11, 2005 in those wire centers that, as of such date, met the criteria set forth in 5.3.6 below. Subsequent disconnects or loss of End Users shall be removed from the Embedded Base.

5.3.4 For purposes of this Section 5.3, Embedded Base Dark Fiber Entrance Facilities means Fiber Entrance Facilities that were in service for Level 3 as of March 11, 2005 in those wire centers that, as of such date, met the criteria set forth in 5.3.6 below. Subsequent disconnects or loss of End Users shall be removed from the Embedded Base.

5.3.5 Notwithstanding anything to the contrary in this Agreement, BellSouth shall make available Dark Fiber Transport as described in this Section 5.3 only for Level 3's Embedded Base during the Transition Period:

5.3.6 Dark Fiber Transport where both wire centers at the end points of the route contain twenty-four thousand (24,000) or more Business Lines or three (3) or more fiber-based collocators. (Tier 2 Wire Center)

5.3.7 The initial list of wire centers (Initial Wire Center List) meeting the criteria set forth in Section 5.3.6 above, is set forth in Section 7.1.4 hereto. As of the effective date of this Amendment, no self-certification in any wire center set forth in the Initial Wire Center List is permitted.

5.3.8 Transition Period Pricing. From March 11, 2005, through the completion of the Transition Period, BellSouth shall charge a rate for Level 3's Embedded Base and Embedded Base Dark Fiber Entrance Facilities shall be equal to the higher of:

5.3.8.1 115% of the rate paid for that element on June 15, 2004; or

5.3.8.2 115% of a new rate the Commission establishes, if any, between June 16, 2004 and March 11, 2005.

5.3.8.3 These rates shall be as set forth in Exhibit A to Attachment 2 of the Agreement and this Section 5.3.8.

5.3.8.4 From March 11, 2005, through the completion of the Transition Period, BellSouth shall charge a rate for Level 3's Embedded Base Entrance Facilities as set forth in this Section 5.3.8.

5.3.9 The Transition Period shall apply only to Level 3's Embedded Base of Dark Fiber Transport and Dark Fiber Entrance Facilities. Level 3 shall not add new Dark Fiber Transport as described in this Section 5.3.1. Level 3 shall not add new Dark Fiber Entrance Facilities pursuant to this Agreement.

5.3.10 Wire Centers listed on the Initial List exceed the threshold set forth in Section 5.3.6, BellSouth will not be required to provide Level 3 future access to Dark Fiber Transport from those wire centers.

5.3.11 No later than September 10, 2006 Level 3 shall submit spreadsheet(s) identifying all of the Embedded Base of Dark Fiber Transport and Dark Fiber Entrance Facilities to be either disconnected or converted to other BellSouth services as Conversions pursuant to Section 17. Level 3 may transition from these Dark Fiber Transport and Dark Fiber Entrance Facilities to other available wholesale arrangements provided by BellSouth, wholesale facilities obtained from other carriers, or self-provisioned facilities. For Conversions as defined in Section 17, such spreadsheet shall take the place of an LSR or ASR. If a Level 3 chooses to convert the Dark Fiber UNE Transport circuits and Dark Fiber Entrance Facilities to special access circuits,

BellSouth will include such Dark Fiber UNE Transport circuits and Dark Fiber UNE Entrance Facilities once converted within Level 3's total special access circuits and apply any discounts to which Level 3 is entitled. The Parties shall negotiate a project schedule for the Conversion of the Embedded Base of Dark Fiber Transport and Dark Fiber Entrance Facilities.

5.3.11.1 If Level 3 submits the spreadsheets specified in Section 5.3.11 for all of its Embedded Base of Dark Fiber Transport and Dark Fiber Entrance Facilities on or before September 10, 2006, Conversions shall be subject to Commission-approved switch-as-is charges.

5.3.11.2 If Level 3 fails to submit the spreadsheet(s) for all of its Embedded Base of Dark Fiber Transport and Dark Fiber Entrance Facilities prior to September 10, 2006, BellSouth will identify Level 3's remaining Embedded Base of Dark Fiber Transport and Dark Fiber Entrance Facilities, if any, and will transition such circuits to the equivalent tariffed BellSouth service(s). Those circuits identified and transitioned by BellSouth shall be subject to all applicable UNE disconnect charges as set forth in this Agreement and the full nonrecurring charges for installation of the equivalent tariffed BellSouth service as set forth in BellSouth's tariffs.

5.3.11.3 For Embedded Base Dark Fiber Transport and Embedded Base Dark Fiber Entrance Facilities converted or transitioned, the applicable recurring tariff charge shall apply to each circuit as of September 11, 2006. The transition of the Embedded Base Dark Fiber Transport and Embedded Base Dark Fiber Entrance Facilities should be performed in a manner that avoids, or otherwise, minimizes to the extent possible, disruption or degradation to Level 3's customers' service.

6. Loops/Transport

6.1 Language to implement BellSouth's obligation to provide § 251 unbundled access to high capacity loops and dedicated transport is included under Issue 1.

6.2 (i) Business Line

6.2.1 For purposes of this Amendment, a "Business Line" is, as defined in 47 C.F.R. § 51.5, a BellSouth-owned switched access line used to serve a business customer, whether by BellSouth itself or by a CLEC that leases the line from BellSouth. The number of business lines in a wire center shall equal the sum of all BellSouth business switched access lines, plus the sum of all UNE loops connected to that wire center, including UNE loops provisioned in combination with other unbundled elements. Among these requirements, business line tallies (1) shall include only those access lines connecting end-user customers with BellSouth end-offices for switched services, (2) shall not include non-switched special access lines, (3) shall account for ISDN and other digital access lines by counting each 64 kbps-equivalent as one line.

For example, a DS1 line corresponds to 24 64 kbps-equivalents, and therefore to 24 "business lines."

6.3 (ii) Fiber-Based Collocation

6.3.1 For purposes of this Amendment a "Fiber-Based Collocator" is, as defined in 47 C.F.R. § 51.5, any carrier, unaffiliated with BellSouth, that maintains a collocation arrangement in a BellSouth wire center, with active electrical power supply, and operates a fiber-optic cable or comparable transmission facility that (1) terminates at a collocation arrangement within the wire center; (2) leaves the BellSouth wire center premises; and (3) is owned by a party other than BellSouth or any affiliate of BellSouth, except as set forth in this paragraph. Dark fiber obtained from an incumbent LEC on an indefeasible right of use basis shall be treated as non-incumbent LEC fiber-optic cable. Two or more affiliated fiber-based collocators in a single wire center shall collectively be counted as a single fiber-based collocator. For purposes of this paragraph, the term affiliate is defined by 47 U.S.C. § 153(1) and any relevant interpretation in this Title.

6.4 (iii) Building

6.4.1 For purposes of this Amendment, a "Building" is a permanent physical structure including, but not limited to, a structure in which people reside, or conduct business or work on a daily basis and through which there is one centralized point of entry in the structure through which all telecommunications services must transit. As an example only, a high rise office building with a general telecommunications equipment room through which all telecommunications services to that building's tenants must pass would be a single "building" for purposes of this Amendment. Two or more physical areas served by individual points of entry through which telecommunications services must transit will be considered separate buildings. For instance, a strip mall with individual businesses obtaining telecommunication services from different access points on the building(s) will be considered individual buildings, even though they might share common walls.

6.5 (iv) Route

6.5.1 The definition of a route is as defined in Section 5.1 of this Exhibit A.

7 Procedures For Additional Designations Of "Non-Impaired" Wire Centers

7.1 Exhibit A to Attachment 2 of the Agreement If BellSouth seeks to designate additional wire centers as "non-impaired" for purposes of the FCC's Triennial Review Remand Order (TRRO), BellSouth will post a Carrier Notification Letter (CNL) designating any new (additional) "non-impaired" wire centers ("subsequent wire centers"). The list of additional "non-impaired" wire centers as designated by BellSouth will reflect the number of Business Lines, as of December 31 of the

previous year, and will also reflect the number of fiber-based collocators in each subsequent wire center on the list at the time of BellSouth's designation.

7.2 Designation by BellSouth of additional "non-impaired" wire centers will be based on the following criteria:

a. The CLLI of the wire center.
b. The number of switched business lines served by BellSouth in that wire center based upon data as reported in ARMIS 43-08 for the previous year.
c. The sum of all UNE Loops connected to each wire center, including UNE Loops provisioned in combination with other elements.
d. A completed worksheet that shows, in detail, any conversion of access lines to voice grade equivalents.
e. The names of any carriers relied upon as fiber-based collocators.

7.3 BellSouth and Level 3 agree to resolve disputes concerning BellSouth's additional wire center designations in dispute resolution proceedings before the Commission.

7.4 The initial wire center list is shown below.

| WIRE CENTER | BUSINESS LINES | FIBER-BASED COLLOCATION | TRANSPORT TIER | LOOP UNBUNDLING |
|---|---|---|---|---|
| MIAMFLPL | 86,923 | >4 | 1 | No DS1/3 |
| MIAMFLGR | 68,580 | >4 | 1 | No DS1/3 |
| ORLDFLMA | 57,966 | >4 | 1 | No DS3 |
| FTLDFLMR | 55,881 | >4 | 1 | No DS3 |
| GSVLFLMA | 55,681 | 4 | 1 | No DS3 |
| ORLDFLPC | 45,792 | >4 | 1 | No DS3 |
| MIAMFLHL | 43,021 | >4 | 1 | No DS3 |
| JCVLFLCL | 42,452 | >4 | 1 | No DS3 |
| MIAMFLAE | 41,912 | >4 | 1 | No DS3 |
| BCRTFLMA | 40,746 | >4 | 1 | No DS3 |
| PRRNFLMA | 37,969 | 3 | 2 | |
| HLWDFLPE | 37,415 | 4 | 1 | |
| WPBHFLHH | 36,053 | 3 | 2 | |
| HLWDFLWH | 34,022 | -- | 2 | |
| PMBHFLMA | 33,993 | 4 | 1 | |
| WPBHFLAN | 33,521 | 4 | 1 | |
| ORLDFLPH | 33,148 | 4 | 1 | |
| MLBRFLMA | 32,547 | 4 | 1 | |
| DYBHFLMA | 32,282 | >4 | 1 | |
| FTLDFLCY | 31,487 | 4 | 1 | |
| ORLDFLAP | 31,234 | 3 | 2 | |
| PNSCFLFP | 30,863 | -- | 2 | |
| FTLDFLPL | 29,469 | >4 | 1 | |

| WIRE CENTER | BUSINESS LINES | FIBER-BASED COLLOCATION | TRANSPORT TIER | LOOP UNBUNDLING |
|---|---|---|---|---|
| FTLDFLJA | 29,209 | >4 | 1 | |
| PNSCFLBL | 28,685 | 4 | 1 | |
| BCRTFLBT | 26,601 | -- | 2 | |
| WPBHFLGR | 26,527 | 3 | 2 | |
| ORLDFLSA | 26,126 | >4 | 1 | |
| PMBHFLFE | 25,909 | 4 | 1 | |
| STRTFLMA | 25,577 | -- | 2 | |
| WPBHFLGA | 24,885 | -- | 2 | |
| MIAMFLRR | 24,740 | 3 | 2 | |
| DRBHFLMA | 24,695 | 1 | 2 | |
| MIAMFLBR | 24,482 | -- | 2 | |
| MIAMFLPB | 24,380 | 4 | 1 | |
| JCVLFLSJ | 24,088 | 3 | 2 | |
| MIAMFLSO | 23,802 | 3 | 2 | |
| MIAMFLWM | 23,310 | 4 | 1 | |
| FTLDFLOA | 23,008 | >4 | 1 | |
| MIAMFLCA | 22,645 | 3 | 2 | |
| ORLDFLCL | 20,828 | >4 | 1 | |
| MNDRFLLO | 20,180 | 3 | 2 | |
| NDADFLGG | 18,239 | >4 | 1 | |
| COCOFLMA | 18,097 | 4 | 1 | |
| JCVLFLSM | 17,820 | >4 | 1 | |
| WPBHFLLE | 13,622 | 3 | 2 | |

8. 2-wire or 4-wire HDSL-Compatible Loop. This is a designed Loop that meets Carrier Serving Area (CSA) specifications, may be up to 12,000 feet long and may have up to 2,500 feet of bridged tap (inclusive of Loop length). It may be a 2-wire or 4-wire circuit and will come standard with a test point, OC, and a DLR.

9. 4-wire Unbundled DS1 Digital Loop. This is a designed 4-wire Loop that is provisioned according to industry standards for DS1 or Primary Rate ISDN services and will come standard with a test point, OC, and a DLR. A DS1 Loop may be provisioned over a variety of loop transmission technologies including copper, HDSL-based technology or fiber optic transport systems. It will include a 4-wire DS1 Network Interface at the End User's location. For purposes of this Amendment, including the transition of DS1 and DS3 Loops described in Section 1 above, DS1 Loops include provisioned HDSL loops and the associated electronics whether configured as HDSL-2-wire or HDSL-4-wire loops.

10. Except to the extent expressly provided otherwise in this Attachment, Level 3 may not maintain unbundled network elements or combinations of unbundled network elements, that are no longer offered pursuant to this Agreement (collectively "Arrangements"). In the event BellSouth determines that Level 3 has in place any Arrangements after the Effective Date of this Agreement, BellSouth will provide

Level 3 with thirty (30) calendar days written notice to disconnect or convert such Arrangements. Those circuits identified by Level 3 within such thirty (30) day period shall be subject to Commission-approved switch-as-is rates with no UNE disconnect charges. If Level 3 fails to submit orders to disconnect or convert such Arrangements within such thirty (30)-day period, BellSouth will transition such circuits to the equivalent tariffed BellSouth service(s). Those circuits identified and transitioned by BellSouth shall be subject to all applicable UNE disconnect charges as set forth in this Agreement and the full nonrecurring charges for installation of the equivalent tariffed BellSouth service as set forth in BellSouth's tariffs. The applicable recurring tariff charges shall apply to each circuit beginning the day following the thirty (30)-day notice period.

11. Self-Certification. Prior to submitting an order pursuant to this Agreement for high capacity (DS1 or above) Dedicated Transport or high capacity Loops, Level 3 shall undertake a reasonably diligent inquiry to determine whether Level 3 is entitled to unbundled access to such Network Elements in accordance with the terms of this Agreement. By submitting any such order, Level 3 self-certifies that to the best of Level 3's knowledge, the high capacity Dedicated Transport or high capacity Loop requested is available as a Network Element pursuant to this Agreement. Upon receiving such order, BellSouth shall process the request in reliance upon Level 3's self-certification. To the extent BellSouth believes that such request does not comply with the terms of this Agreement, BellSouth shall seek dispute resolution in accordance with the General Terms and Conditions of this Agreement. In the event such dispute is resolved in BellSouth's favor, BellSouth shall bill Level 3 the difference between the rates for such circuits pursuant to this Agreement and the applicable nonrecurring and recurring charges for the equivalent tariffed service from the date of installation to the date the circuit is transitioned to the equivalent tariffed service. Within thirty (30) calendar days following a decision finding in BellSouth's favor, Level 3 shall submit a spreadsheet identifying those non-compliant circuits to be transitioned to tariffed services or disconnected.

12. In the event that (1) BellSouth designates a wire center as non-impaired, (2) Level 3 converts existing UNEs to other services or orders new services as services other than UNEs, (3) Level 3 otherwise would have been entitled to UNEs in such wire center at the time alternative services provisioned, and (4) BellSouth acknowledges or a state or federal agency regulatory body with authority determines that, at the time BellSouth designated such wire center as non-impaired, such wire center did not meet the FCC's non-impairment criteria, then upon request of Level 3, BellSouth shall transition to UNEs any alternative services in such wire center that were established after such wire center was designated as non-impaired. In such instances, BellSouth shall refund Level 3 the difference between the rate paid by Level 3 for such services and the applicable UNE rate, including but not limited to any charges associated with the unnecessary conversion from UNE to other wholesale services.

13. Modifications and Updates to the Wire Center List and Subsequent Transition Periods

13.1 DS1 or DS3 loops, or Dedicated Transport in Wire Centers that Meet the TRRO Non-Impaired Criteria in the Future

13.2 In the event BellSouth identifies additional wire centers that meet the criteria set forth in Sections 1.4.1 (DS1 loops), 1.4.2 (DS3 loops), 5.2.5.1 (DS1 transport) and 5.2.5.2 (DS3 transport) but that were not included in the Initial Wire Center List, BellSouth shall include such additional wire centers in a carrier notification letter (CNL). Each such list of additional wire centers shall be considered a "Subsequent Wire Center List."

13.3 Effective thirty (30) calendar days after the date of a BellSouth CNL providing a Subsequent Wire Center List, BellSouth shall not be required to unbundle new DS1 or DS3 Loops, or transport, as applicable, in such additional wire center(s), except pursuant to the self-certification process.

13.4 BellSouth shall make available de-listed DS1 and DS3 Loops and transport that were in service for Level 3 in a de-listed wire center on the Subsequent Wire Center List as of the thirtieth ($30^{th}$) calendar day after the date of BellSouth's CNL identifying the Subsequent Wire Center List (Subsequent Embedded Base) until one hundred and eighty (180) calendar days after the thirtieth (30th) calendar day from the date of BellSouth's CNL identifying the Subsequent Wire Center List (Subsequent Transition Period).

13.5 Subsequent disconnects or loss of End Users shall be removed from the Subsequent Embedded Base.

13.6 The rates that shall apply to the Subsequent Embedded Base throughout the entire Subsequent Transition Period. The rates shall equal the rate paid for that element at the time of the CNL posting, plus 15%.

13.7 No later than one hundred and eighty (180) calendar days from BellSouth's CNL identifying the Subsequent Wire Center List, Level 3 shall submit a spreadsheet(s) identifying the Subsequent Embedded Base of circuits to be disconnected or converted to other BellSouth services. For Conversions as defined in Section 17, such spreadsheets shall take the place of an LSR or ASR. The Parties shall negotiate a project schedule for the Conversion of the Subsequent Embedded Base of circuits. If a Level 3 chooses to convert the de-listed DS1 and DS3 Loops and Transport to special access circuits, BellSouth will include such de-listed DS1 and DS3 Loops and Transport once converted within Level 3's total special access circuits and apply any discounts to which Level 3 is entitled. The Parties shall negotiate a project schedule for the Conversion of the Subsequent Embedded Base.

13.7.1 If Level 3 submits the spreadsheet(s) for its Subsequent Embedded Base by one hundred and eighty (180) calendar days from BellSouth's CNL identifying the Subsequent Wire Center List, those identified circuits shall be subject to the Commission-approved switch-as-is conversion nonrecurring charges.

13.7.2 If Level 3 fails to submit the spreadsheet(s) for all of its Subsequent Embedded Base by one hundred and eighty (180) calendar days after the date of BellSouth's CNL identifying the Subsequent Wire Center List, BellSouth will identify Level 3's

remaining Subsequent Embedded Base, if any, and will transition such circuits to the equivalent tariffed BellSouth service(s). Those circuits identified and transitioned by BellSouth shall be subject to the applicable disconnect charges as set forth in this Agreement and the full nonrecurring charges for installation of the equivalent tariffed BellSouth service as set forth in BellSouth's tariffs.

13.7.3 For Subsequent Embedded Base circuits converted or transitioned, the applicable recurring tariff charges shall apply on the first day after the end of the Subsequent Transition Period. The transition of the Subsequent Embedded Base circuits should be performed in a manner that avoids, or otherwise minimizes to the extent possible, disruption or degradation to Level 3's customers' service.

13.8 Dark Fiber Transport in Wire Centers that Meet the TRRO Non-Impaired Criteria in the Future

13.8.1 In the event BellSouth identifies additional wire centers that meet the criteria set forth in Section 5.3.6 above, but that were not included in the Initial Wire Center List, BellSouth shall include such additional wire centers in a CNL. Each such list of additional wire centers shall be considered a "Subsequent Wire Center List."

13.8.2 Effective thirty (30) calendar days after the date of a BellSouth CNL providing a Subsequent Wire Center List, BellSouth shall not be required to unbundle new Dark Fiber Transport, as applicable, in such additional wire center(s), except pursuant to the self-certification process as set forth in Section 11 above.

13.8.3 For purposes of Section 13.8, BellSouth shall make available dark fiber transport that was in service for Level 3 in a wire center on the Subsequent Wire Center List as of the thirtieth ($30^{th}$) calendar day after the date of BellSouth's CNL identifying the Subsequent Wire Center List (Subsequent Embedded Base) until two hundred and seventy (270) calendar days after the thirtieth (30th) calendar day from the date of BellSouth's CNL identifying the Subsequent Wire Center List (Subsequent Transition Period).

13.8.4 Subsequent disconnects or loss of End Users shall be removed from the Subsequent Embedded Base.

13.8.5 The rates that shall apply to the Subsequent Embedded Base throughout the entire Subsequent Transition Period. The rates shall equal the rate paid for that element at the time of the CNL posting, plus 15%.

13.8.6 No later than two hundred and seventy (270) calendar days from BellSouth's CNL identifying the Subsequent Wire Center List Level 3 shall submit a spreadsheet(s) identifying the Subsequent Embedded Base of circuits to be disconnected or converted to other BellSouth services. For Conversions as defined in Section 17, such spreadsheets shall take the place of an LSR or ASR. The Parties shall negotiate a project schedule for the Conversion of the Subsequent Embedded Base of circuits. If a Level 3 chooses to convert the Dark Fiber Transport to special access circuits, BellSouth will include such Dark Fiber Transport once converted within Level 3's total special access circuits and apply any discounts to which Level 3 is entitled. The

Parties shall negotiate a project schedule for the Conversion of the Subsequent Embedded Base.

13.8.6.1 If Level 3 submits the spreadsheet(s) for its Subsequent Embedded Base within two hundred and seventy (270) calendar days from BellSouth's CNL identifying the Subsequent Wire Center List, those identified circuits shall be subject to the Commission-approved switch-as-is conversion nonrecurring charges are applicable

13.8.6.2 If Level 3 fails to submit the spreadsheet(s) for all of its Subsequent Embedded Base within two hundred and seventy (270) calendar days after the date of BellSouth's CNL identifying the Subsequent Wire Center List, BellSouth will identify Level 3's remaining Subsequent Embedded Base, if any, and will transition such circuits to the equivalent tariffed BellSouth service(s). Those circuits identified and transitioned by BellSouth shall be subject to the applicable disconnect charges as set forth in this Agreement and the full nonrecurring charges for installation of the equivalent tariffed BellSouth service as set forth in BellSouth's tariffs.

13.8.7 For Subsequent Embedded Base circuits converted or transitioned, the applicable recurring tariff charges shall apply on the first day after the end of the Subsequent Transition Period. The transition of the Subsequent Embedded Base circuits should be performed in a manner that avoids, or otherwise, minimizes to the extent possible, disruption or degradation to Level 3's customers' service.

14. Level 3 may purchase and use Network Elements and Other Services from BellSouth in accordance with 47 C.F.R §51.309. Performance Measurements associated with this Attachment 2 are contained in Attachment 9. The quality of the Network Elements provided pursuant to §251, as well as the quality of the access to said Network Elements that BellSouth provides to Level 3, shall be, to the extent technically feasible, at least equal to that which BellSouth provides to itself, and its affiliates.

15. The Parties shall comply with the requirements as set forth in the technical references within this Attachment 2. BellSouth shall comply with the requirements set forth in the technical reference TR73400, as well as any performance or other requirements identified in this Agreement, to the extent that they are consistent with the greater of BellSouth's actual performance or applicable industry standards. If one or more of the requirements set forth in this Agreement are in conflict, the technical reference TR73600 requirements shall apply. If the parties cannot reach agreement, the dispute resolution process set forth in the General Terms and Conditions of this Agreement shall apply.

16. Commingling of Services

16.1 Commingling means the connecting, attaching, or otherwise linking of a Network Element, or a Combination, to one or more Telecommunications Services or facilities that Level 3 has obtained at wholesale from BellSouth, or the combining of a Network Element or Combination with one or more such wholesale Telecommunications Services or facilities. Level 3 must comply with all rates, terms or conditions applicable to such wholesale Telecommunications Services or facilities.

16.2 Subject to the limitations set forth elsewhere in this Attachment, BellSouth shall not deny access to a Network Element or a Combination on the grounds that one or more of the elements: 1) is connected to, attached to, linked to, or combined with such a facility or service obtained from BellSouth; or 2) shares part of BellSouth's network with access services or inputs for mobile wireless services and/or interexchange services.

16.3 Unless otherwise agreed to by the Parties, the Network Element portion of a commingled circuit will be billed at the rates set forth in Exhibit B and the remainder of the circuit or service will be billed in accordance with BellSouth's tariffed rates or rates set forth in that separate agreement between the Parties.

16.4 When multiplexing equipment is attached to a commingled arrangement, the multiplexing equipment will be billed from the same agreement or the tariff as the higher bandwidth circuit. Central Office Channel Interfaces (COCI) will be billed from the same agreement or tariff as the lower bandwidth circuit.

16.5 Notwithstanding any other provision of this Agreement, BellSouth shall not be obligated to commingle or combine Network Elements or Combinations with any service, network element or other offering that it is obligated to make available only pursuant to Section 271 of the Act.

17. Conversion of Wholesale Services to Network Elements or Network Elements to Wholesale Services

17.1 Upon request, BellSouth shall convert a wholesale service, or group of wholesale services, to the equivalent Network Element or Combination that is available to Level 3 pursuant to Section 251 of the Act and under this Agreement, or convert a Network Element or Combination that is available to Level 3 pursuant to Section 251 of the Act and under this Agreement to an equivalent wholesale service or group of wholesale services offered by BellSouth (collectively "Conversion"). BellSouth shall charge the applicable nonrecurring switch-as-is rates for Conversions to specific Network Elements or Combinations found in Exhibit A. BellSouth shall also charge the same nonrecurring switch-as-is rates when converting from Network Elements or Combinations. Any rate change resulting from the Conversion will be effective as of the next billing cycle following BellSouth's receipt of a complete and accurate Conversion request from Level 3. A Conversion shall be considered termination for purposes of any volume and/or term commitments and/or grandfathered status between Level 3 and BellSouth. Any change from a wholesale service/group of wholesale services to a Network Element/Combination, or from a Network Element/Combination to a wholesale service/group of wholesale services that requires a physical rearrangement will not be considered to be a Conversion for purposes of this Agreement. BellSouth will not require physical rearrangements if the Conversion can be completed through record changes only. Orders for Conversions will be handled in accordance with the guidelines set forth in the Ordering Guidelines and Processes and CLEC Information Packages as referenced in Section 17.3 below.

17.2 Any outstanding conversions shall be effective on or after the effective date of this agreement.

17.3 Ordering Guidelines and Processes

17.3.1 For information regarding Ordering Guidelines and Processes for various Network Elements, Combinations and Other Services, Level 3 should refer to the "Guides" section of the BellSouth Interconnection Web site.

17.3.2 Additional information may also be found in the individual CLEC Information Packages located at the "CLEC UNE Products" on BellSouth's Interconnection Web site at: www.interconnection.bellsouth.com/guides/html/unes.html.

17.3.3 The provisioning of Network Elements, Combinations and Other Services to Level 3's Collocation Space will require cross-connections within the central office to connect the Network Element, Combinations or Other Services to the demarcation point associated with Level 3's Collocation Space. These cross-connects are separate components that are not considered a part of the Network Element, Combinations or Other Services and, thus, have a separate charge pursuant to this Agreement.

17.3.4 Any pending conversions shall be effective on the effective date of this agreement.

18. Line Sharing

18.1 General**.** Line Sharing is defined as the process by which Level 3 provides digital subscriber line ("xDSL") service over the same copper Loop that BellSouth uses to provide retail voice service, with BellSouth using the low frequency portion of the Loop and Level 3 using the high frequency spectrum (as defined below) of the Loop.

18.2 Line Sharing arrangements in service as of October 1, 2003 under a prior Interconnection Agreement between Bellsouth and Level 3, will remain in effect until the End User discontinues or moves xDSL service with Level 3. Arrangements pursuant to this Section will be billed at the rates set forth in Exhibit B**.**

18.3 For Line Sharing arrangements placed in service between October 2, 2003, and October 1, 2004 the rates will be as set forth in Exhibit B**.**

18.4 For Line Sharing arrangements placed on or after October 2, 2004 (whether under this Agreement only, or under this Agreement and a prior Agreement), the rates will be as set forth in Exhibit B.

18.5 Any Line Sharing arrangements placed in service on or after October 2, 2003; and not otherwise terminated, shall terminate on October 2, 2006.

18.6 No new line sharing arrangements may be ordered.

18.7 The High Frequency Spectrum is defined as the frequency range above the voiceband on a copper Loop facility carrying analog circuit-switched voiceband transmissions.

Access to the High Frequency Spectrum is intended to allow Level 3 the ability to provide xDSL data services to the End User for which BellSouth provides voice services.

18.8 The High Frequency Spectrum shall be available for any version of xDSL complying with Spectrum Management Class *5* of ANSI TI.417**,** American National Standard for Telecommunications, Spectrum Management for Loop Transmission Systems. BellSouth will continue to have access to the low frequency portion of the Loop spectrum (from 300 Hertz to at least 3000 Hertz, and potentially up to 3400 Hertz, depending on equipment and facilities) for the purposes of providing voice service. Level 3 shall only use xDSL technology that is within the PSD mask for Spectrum Management Class *5* as found in the abovementioned document.

18.9 Access to the High Frequency Spectrum requires an unloaded, 2-wire copper Loop. An unloaded Loop is a copper Loop with no load coils, lowpass filters, range extenders, DAMLs, or similar devices and minimal bridged taps consistent with ANSI T1.413 and TI .601.

18.10 BellSouth will provide Loop Modification to Level 3 on an existing Loop for Line Sharing in accordance with procedures as specified in Section 2 of this Agreement. BellSouth is not required to modify a Loop for access to the High Frequency spectrum if modification of that Loop significantly degrades BellSouth's voice service. If Level 3 requests that BellSouth modify a Loop and such modification significantly degrades the voice services on the Loop, Level 3 shall pay for the Loop to be restored to its original state.

18.11 Line Sharing must be provide only on loops on which BellSouth is also providing, and continues to provide, analog voice service directly to the End User. In the event the End User terminates its BellSouth provided voice service for any reason, or in the event BellSouth disconnects the End User's voice service pursuant to its tariffs or applicable law, and Level 3 desires to continue providing xDSL service on such Loop, Level 3 or the new voice provider, shall be required to purchase a full stand-alone Loop. In those cases in which BellSouth no longer provides voice service to the End User and Level 3 purchases the full stand-alone Loop, Level 3 may elect the type of Loop it will purchase. Level 3 will pay the appropriate recurring and nonrecurring rates for such Loop as set forth in Exhibit A to Attachment 2 of the Agreement. In the event Level 3 purchases a voice grade Loop, Level 3 acknowledges that such Loop may not remain xDSL compatible.

18.12 If the End User terminates its BellSouth provided voice service, and Level 3 requests BellSouth to convert the Line Sharing arrangement to a Line Splitting arrangement, BellSouth will discontinue billing Level 3 for the High Frequency Spectrum and begin billing the voice Level 3 for the full stand-alone Loop. BellSouth will continue to bill Level 3 for all associated splitter charges if Level 3 continues to use a BellSouth splitter. Only one CLEC shall be permitted access to the High Frequency Spectrum of any particular Loop.

18.13 Once BellSouth has placed cross-connects on behalf of Level 3 to provide Level 3 access to the High Frequency Spectrum and chooses to rearrange its splitter or Level 3 pairs, Level 3 may order the rearrangement of its splitter or cable pairs via "Subsequent Activity". Subsequent Activity is any rearrangement of Level 3's cable pairs or splitter ports after BellSouth has placed cross-connection to provide Level 3 access to the High Frequency Spectrum. BellSouth shall bill and Level 3 shall pay the Subsequent Activity charges as set forth in Exhibit A to Attachment 2 of the Agreement.

18.14 BellSouth's Local Ordering Handbook (LOH) will provide Level 3 the LSR format to be used when ordering disconnections of the High Frequency Spectrum or Subsequent Activity.

18.15 Maintenance and Repair - Line Sharing. Level 3 shall have access for repair and maintenance purposes to any Loop for which it has access to the High Frequency Spectrum. Level 3 may test from the collocation space, the Termination Point, or the NID. BellSouth will be responsible for repairing voice services and the physical line between the NID at the End User's premises and the Termination Point. Level 3 will be responsible for repairing its data services. Each Party will be responsible for maintaining its own equipment.

18.16 Level 3 shall inform its End Users to direct data problems to Level 3, unless both voice and data services are impaired, in which event Level 3 should direct the End Users to contact BellSouth. Once a Party has isolated a trouble to the other Party's portion of the Loop, the Party isolating the trouble shall notify the End User that the trouble is on the other Party's portion of the Loop.

19. Line Splitting

19.1 Line splitting is defined to mean that a provider of data services (a Data LEC) and a provider of voice services (a Voice CLEC) deliver voice and data service to End Users over the same Loop. The Voice CLEC and Data LEC may be the same or different carriers.

19.2 Line Splitting – UNE-L. If Level 3 provides its own switching or obtains switching from a third party, Level 3 may engage in line splitting arrangements with another CLEC using a splitter, provided by Level 3, in a Collocation Space at the central office where the loop terminates into a distribution frame or its equivalent.

19.2.1 Provisioning Line Splitting and Splitter Space – UNE-L

19.2.1.1 The requesting carrier provides the splitter when providing Line Splitting with UNE-L. When Level 3 owns the splitter, Line Splitting requires the following: a loop from NID at the End User's location to the serving wire center and terminating into a distribution frame or its equivalent.

19.2.1.2 An unloaded 2-wire copper Loop must serve the End User. The meet point for the Voice CLEC and the Data LEC is the point of termination on the MDF for the Data LEC's cable and pairs.

19.3 CLEC Provided Splitter – Line Splitting – UNE-L

19.3.1 To order High Frequency Spectrum on a particular Loop, Level 3 must have a DSLAM collocated in the central office that serves the End User of such Loop.

19.3.2 Level 3 may purchase, install and maintain central office POTS splitters in its collocation arrangements. Level 3 may use such splitters for access to its customers and to provide digital line subscriber services to its customers using the High Frequency Spectrum. Existing Collocation rules and procedures and the terms and conditions relating to Collocation set forth in Attachment 4 Central Office shall apply.

19.3.2 Any splitters installed by Level 3 in its collocation arrangement shall comply with ANSI T1.413, Annex E, or any future ANSI splitter Standards. Level 3 may install any splitters that BellSouth deploys or permits to be deployed for itself or any BellSouth affiliate.

19.4 Maintenance – Line Splitting – UNE-L

19.4.1 BellSouth will be responsible for repairing voice troubles and the troubles with the physical loop between the NID at the End User's premises and the termination point.

19.5 Indemnification

19.5.1 Level 3 shall indemnify, defend and hold harmless BellSouth from and against any claims, losses, actions, causes of action, suits, demands, damages, injury, and costs including reasonable attorney fees, which arise out of actions related to the other service provider, except to the extent caused by BellSouth's gross negligence or willful misconduct.

19.6 Network Modifications

19.6.1 BellSouth must make all necessary network modifications, including providing non-discriminatory access to operations support systems necessary for pre-ordering, ordering, provisioning, maintenance and repair, and billing for loops used in line splitting arrangements.

20. Call Related Databases and Signaling

20.1 Call Related Databases are the databases other than OSS, that are used in signaling networks, for billing and collection, or the transmission, routing or other provision of a Telecommunication Service. Notwithstanding anything to the contrary herein, BellSouth shall only provide unbundled access to call related databases and signaling

including but not limited to, BellSouth Switched Access 8XX Toll Free Dialing Ten Digit Screening Service, LIDB, Signaling, Signaling Link Transport, STP, SS7 AIN Access, Service Control Point(SCP\Databases, Local Number Portability (LNP) Databases and Calling Name (CNAM) Database Service pursuant to this Agreement where BellSouth is required to provide and is providing Local Switching or UNE-P to Level 3 pursuant to this Agreement.

20.1.1 Such unbundled access is only available until March 10, 2006.

20.2 BellSouth Switched Access (SWA) 8XX Toll Free Dialing Ten Digit Screening Service

20.2.1 The BellSouth SWA 8XX Toll Free Dialing Ten Digit Screening Service database (8XX SCP Database) is a SCP that contains customer record information and the functionality to provide call-handling instructions for 8XX calls. The 8XX SCP IN software stores data downloaded from the national SMS/8XX database and provides the routing instructions in response to queries from the SSP or tandem. The BellSouth SWA 8XX Toll Free Dialing Ten Digit Screening Service (8XX TFD Service) utilizes the 8XX SCP Database to provide identification and routing of the 8XX calls, based on the ten digits dialed. At Level 3's option, 8XX TFD Service is provided with or without POTS number delivery, dialing number delivery, and other optional complex features as selected by Level 3.

20.2.2 The 8XX SCP Database is designated to receive and respond to queries using the ANSI Specification of SS7 protocol.

20.3 LIDB

20.3.1 LIDB is a transaction-oriented database accessible through Common Channel Signaling (CCS) networks. For access to LIDB, Level 3 must purchase appropriate signaling links pursuant to Section 20.4 below. LIDB contains records associated with End User Line Numbers and Special Billing Numbers. LIDB accepts queries from other Network Elements and provides appropriate responses. The query originator need not be the owner of LIDB data. LIDB queries include functions such as screening billed numbers that provides the ability to accept Collect or Third Number Billing calls and validation of Telephone Line Number based non-proprietary calling cards. The interface for the LIDB functionality is the interface between BellSouth's CCS network and other CCS networks. LIDB also interfaces to administrative systems.

20.3.2 Technical Requirements

20.3.2.1 BellSouth will offer to Level 3 any additional capabilities that are developed for LIDB during the life of this Agreement.

20.3.2.2 BellSouth shall process Level 3's customer records in LIDB at least at parity with BellSouth customer records, with respect to other LIDB functions. BellSouth shall indicate to Level 3 what additional functions (if any) are performed by LIDB in the BellSouth network.

20.3.2.3 Within two (2) weeks after a request by Level 3, BellSouth shall provide Level 3 with a list of the customer data items, which Level 3 would have to provide in order to support each required LIDB function. The list shall indicate which data items are essential to LIDB function and which are required only to support certain services. For each data item, the list shall show the data formats, the acceptable values of the data item and the meaning of those values.

20.3.2.4 BellSouth shall provide LIDB systems for which operating deficiencies that would result in calls being blocked shall not exceed thirty (30) minutes per year.

20.3.2.5 BellSouth shall provide LIDB systems for which operating deficiencies that would not result in calls being blocked shall not exceed twelve (12) hours per year.

20.3.2.6 BellSouth shall provide LIDB systems for which the LIDB function shall be in overload no more than twelve (12) hours per year.

20.3.2.7 All additions, updates and deletions of Level 3 data to the LIDB shall be solely at the direction of Level 3. Such direction from Level 3 will not be required where the addition, update or deletion is necessary to perform standard fraud control measures (e.g., calling card auto-deactivation).

20.3.2.8 BellSouth shall provide priority updates to LIDB for Level 3 data upon Level 3's request (e.g., to support fraud detection), via password-protected telephone card, facsimile, or electronic mail within one hour of notice from the established BellSouth contact.

20.3.2.9 BellSouth shall provide LIDB systems such that no more than 0.01% of Level 3 customer records will be missing from LIDB, as measured by Level 3 audits. BellSouth will audit Level 3 records in LIDB against Data Base Administration System (DBAS) to identify record mismatches and provide this data to a designated Level 3 contact person to resolve the status of the records and BellSouth will update system appropriately. BellSouth will refer record of mismatches to Level 3 within one (1) business day of audit. Once reconciled records are received back from Level 3, BellSouth will update LIDB the same business day if less than five hundred (500) records are received before 1:00 p.m. Central Time. If more than five hundred (500) records are received, BellSouth will contact Level 3 to negotiate a time frame for the updates, not to exceed three (3) business days.

20.3.2.10 BellSouth shall perform backup and recovery of all of Level 3's data in LIDB including sending to LIDB all changes made since the date of the most recent backup copy, in at least the same time frame BellSouth performs backup and recovery of BellSouth data in LIDB for itself. Currently, BellSouth performs backups of the LIDB for itself on a weekly basis; and when a new software release is scheduled, a backup is performed prior to loading the new release.

20.3.2.11 BellSouth shall provide Level 3 with LIDB reports of data which are missing or contain errors, as well as any misrouted errors, within a reasonable time period as negotiated between Level 3 and BellSouth.

20.3.2.12 BellSouth shall prevent any access to or use of Level 3 data in LIDB by BellSouth personnel that are outside of established administrative and fraud control personnel, or by any other Party that is not authorized by Level 3 in writing.

20.3.2.13 BellSouth shall provide Level 3 performance of the LIDB Data Screening function, which allows a LIDB to completely or partially deny specific query originators access to LIDB data owned by specific data owners, for Customer Data that is part of an NPA-NXX or RAO-0/1XX wholly or partially owned by Level 3 at least at parity with BellSouth Customer Data. BellSouth shall obtain from Level 3 the screening information associated with LIDB Data Screening of Level 3 data in accordance with this requirement. BellSouth currently does not have LIDB Data Screening capabilities. When such capability is available, BellSouth shall offer it to Level 3 under the BFR/NBR Process as set forth in Attachment 11.

20.3.2.14 BellSouth shall accept queries to LIDB associated with Level 3 customer records and shall return responses in accordance with industry standards.

20.3.2.15 BellSouth shall provide mean processing time at the LIDB within 0.50 seconds under normal conditions as defined in industry standards.

20.3.2.16 BellSouth shall provide processing time at the LIDB within one (1) second for ninety-nine percent (99%) of all messages under normal conditions as defined in industry standards.

20.3.2.17 Interface Requirements

20.3.2.17.1 BellSouth shall offer LIDB in accordance with the requirements of this subsection.

20.3.2.17.2 The interface to LIDB shall be in accordance with the technical references contained within.

20.3.2.17.3 The CCS interface to LIDB shall be the standard interface described herein.

20.3.2.17.4 The LIDB Data Base interpretation of the ANSI-TCAP messages shall comply with the technical reference herein. Global Title Translation (GTT) shall be maintained in the signaling network in order to support signaling network routing to the LIDB.

20.3.2.17.5 The application of the LIDB rates contained in Exhibit A will be based on a Percent CLEC LIDB Usage (PCLU) factor. Level 3 shall provide BellSouth a PCLU. The PCLU will be applied to determine the percentage of total LIDB usage to be billed to the other Party at local rates. Level 3 shall update its PCLU on the first of January, April, July and October and shall send it to BellSouth to be received no later than thirty (30) calendar days after the first of each such month based on local usage for the past three months ending the last day of December, March, June and September,

respectively. Requirements associated with PCLU calculation and reporting shall be as set forth in BellSouth's Jurisdictional Factors Reporting Guide.

20.4 Signaling

BellSouth shall offer access to signaling and access to BellSouth's signaling databases subject to compatibility testing and at the rates set forth in this Attachment. BellSouth may provide mediated access to BellSouth signaling systems and databases. Available signaling elements include signaling links, STPs and SCPs. Signaling functionality will be available with both A-link and B-link connectivity.

20.4.1 Signaling Link Transport. Signaling Link Transport is a set of two (2) or four (4) dedicated 56 kbps transmission paths between Level 3 designated SPOI that provide appropriate physical diversity.

20.4.2 Technical Requirements

20.4.2.1 Signaling Link Transport shall consist of full duplex mode 56 kbps transmission paths and shall perform in the following two ways:

20.4.2.2 As an "A-link" Signaling Link Transport is a connection between a switch or SCP and a home STP switch pair; and

20.4.2.3 As a "B-link" Signaling Link Transport is a connection between two (2) STP switch pairs in different company networks (e.g., between two (2) STP switch pairs for two (2) CLECs).

20.4.2.4 Signaling Link Transport shall consist of two (2) or more signaling link layers as follows:

20.4.2.4.1 An A-link layer shall consist of two (2) links; and

20.4.2.4.2 A B-link layer shall consist of four (4) links.

20.4.2.5 A signaling link layer shall satisfy interoffice and intraoffice diversity of facilities and equipment, such that:

20.4.2.6 No single failure of facilities or equipment causes the failure of both links in an A-link layer (i.e., the links should be provided on a minimum of two (2) separate physical paths end-to-end); and

20.4.2.7 No two (2) concurrent failures of facilities or equipment shall cause the failure of all four (4) links in a B-link layer (i.e., the links should be provided on a minimum of three (3) separate physical paths end-to-end).

20.4.2.8 Interface Requirements. There shall be a DS1 (1.544 Mbps) interface at Level 3's designated SPOIs. Each 56 kbps transmission path shall appear as a DS0 channel within the DS1 interface.

20.5 STP. An STP is a signaling network function that includes all of the capabilities provided by the signaling transfer point switches and their associated signaling links that enables the exchange of SS7 messages among and between switching elements, database elements and signaling transfer point switches.

20.5.1 Technical Requirements

20.5.1.1 STPs shall provide access to BellSouth Local Switching or Tandem Switching and to BellSouth SCPs/Databases connected to BellSouth SS7 network. STPs also provide access to third party local or tandem switching and third party provided STPs.

20.5.1.2 The connectivity provided by STPs shall fully support the functions of all other Network Elements connected to the BellSouth SS7 network. This includes the use of the BellSouth SS7 network to convey messages that neither originate nor terminate at a signaling end point directly connected to the BellSouth SS7 network (i.e., transit messages). When the BellSouth SS7 network is used to convey transit messages, there shall be no alteration of the Integrated Services Digital Network User Part (ISDNUP) or Transaction Capabilities Application Part (TCAP) user data that constitutes the content of the message. Rates for ISDNUP and TCAP messages are as set forth in Exhibit A.

20.5.1.3 If a BellSouth tandem switch routes traffic, based on dialed or translated digits, on SS7 trunks between a Level 3 local switch and third party local switch, the BellSouth SS7 network shall convey the TCAP messages that are necessary to provide Call Management features (Automatic Callback, Automatic Recall, and Screening List Editing) between Level 3 local STPs and the STPs that provide connectivity with the third party local switch, even if the third party local switch is not directly connected to BellSouth STPs.

20.5.1.4 STPs shall provide all functions of the SCCP necessary for Class 0 (basic connectionless) service as defined in Telcordia ANSI Interconnection Requirements. This includes GTT and SCCP Management procedures, as specified in ANSI T1.112.4. Where the destination signaling point is a Level 3 or third party local or tandem switching system directly connected to BellSouth SS7 network, BellSouth shall perform final GTT of messages to the destination and SCCP Subsystem Management of the destination. In all other cases, BellSouth shall perform intermediate GTT of messages to a gateway pair of STPs in an SS7 network connected with BellSouth SS7 network and shall not perform SCCP Subsystem Management of the destination. If BellSouth performs final GTT to a Level 3 database, then Level 3 agrees to provide BellSouth with the Destination Point Code for Level 3 database.

20.5.1.5 STPs shall provide all functions of the Operations, Maintenance and Administration Part (OMAP) as specified in applicable industry standard technical references, which may include, where available in BellSouth's network, MTP Routing Verification Test (MRVT) and SCCP Routing Verification Test (SRVT).

20.5.1.6 Where the destination signaling point is a BellSouth local or tandem switching system or database, or is a Level 3 or third party local or tandem switching system directly connected to the BellSouth SS7 network, STPs shall perform MRVT and SRVT to the destination signaling point. In all other cases, STPs shall perform MRVT and SRVT to a gateway pair of STPs in an SS7 network connected with the BellSouth SS7 network. This requirement may be superseded by the specifications for Internetwork MRVT and SRVT when these become approved ANSI standards and available capabilities of BellSouth STPs.

20.6 SS7

20.6.1 When technically feasible and upon request by Level 3, SS7 AIN Access shall be made available in association with switching. SS7 AIN Access is the provisioning of AIN 0.1 triggers in an equipped BellSouth local switch and interconnection of the BellSouth SS7 network with Level 3's SS7 network to exchange TCAP queries and responses with a Level 3 SCP.

20.6.2 SS7 AIN Access shall provide Level 3 SCP access to an equipped BellSouth local switch via interconnection of BellSouth's SS7 and Level 3 SS7 Networks. BellSouth shall offer SS7 AIN Access through its STPs. If BellSouth requires a mediation device on any part of its network specific to this form of access, BellSouth must route its messages in the same manner. The interconnection arrangement shall result in the BellSouth local switch recognizing the Level 3 SCP as at least at parity with BellSouth's SCPs in terms of interfaces, performance and capabilities.

20.6.3 Interface Requirements

20.6.3.1 BellSouth shall provide the following STP options to connect Level 3 or Level 3-designated Local Switching systems to the BellSouth SS7 network:

20.6.3.1.1 An A-link interface from Level 3 Local Switching systems; and

20.6.3.1.2 A B-link interface from Level 3 local STPs.

20.6.4 Each type of interface shall be provided by one or more layers of signaling links.

20.6.5 The SPOI for each link shall be located at a cross-connect element in the CO where the BellSouth STP is located. There shall be a DS1 or higher rate transport interface at each of the SPOIs. Each signaling link shall appear as a DS0 channel within the DS1 or higher rate interface.

20.6.6 BellSouth shall provide intraoffice diversity between the SPOI and BellSouth STPs so that no single failure of intraoffice facilities or equipment shall cause the failure of both B-links in a layer connecting to a BellSouth STP.

20.6.7 STPs shall provide all functions of the MTP as defined in the applicable industry standard technical references.

20.6.8 Message Screening

20.6.8.1 BellSouth shall set message screening parameters so as to accept valid messages from Level 3 local or tandem switching systems destined to any signaling point within

BellSouth's SS7 network where the Level 3 switching system has a valid signaling relationship.

20.6.8.2 BellSouth shall set message screening parameters so as to pass valid messages from Level 3 local or tandem switching systems destined to any signaling point or network accessed through BellSouth's SS7 network where the Level 3 switching system has a valid signaling relationship.

20.6.8.3 BellSouth shall set message screening parameters so as to accept and pass/send valid messages destined to and from Level 3 from any signaling point or network interconnected through BellSouth's SS7 network where the Level 3 SCP has a valid signaling relationship.

20.7 SCP/Databases

20.7.1 Call Related Databases provide the storage of, access to, and manipulation of information required to offer a particular service and/or capability. BellSouth shall provide access to the following Databases: LNP, LIDB, Toll Free Number Database, ALI/DMS, and CNAM Database. BellSouth also provides access to SCE/SMS application databases and DA.

20.7.2 A SCP is deployed in a SS7 network that executes service application logic in response to SS7 queries sent to it by a switching system also connected to the SS7 network. SMS provides operational interfaces to allow for provisioning, administration and maintenance of subscriber data and service application data stored in SCPs.

20.7.3 Technical Requirements for SCPs/Databases

20.7.3.1 BellSouth shall provide physical access to SCPs through the SS7 network and protocols with TCAP as the application layer protocol.

20.7.3.2 BellSouth shall provide physical interconnection to databases via industry standard interfaces and protocols (e.g., SS7, ISDN and X.25).

20.7.3.3 The reliability of interconnection options shall be consistent with requirements for diversity and survivability.

20.7.4. LNP Database. The Permanent Number Portability (PNP) database supplies routing numbers for calls involving numbers that have been ported from one local service provider to another. BellSouth agrees to provide access to the PNP database at rates, terms and conditions as set forth by BellSouth and in accordance with an effective FCC or Commission directive.

20.7.5 CNAM Database Service

20.7.5.1 CNAM is the ability to associate a name with the calling party number, allowing the End User (to which a call is being terminated) to view the calling party's name before the call is answered. The calling party's information is accessed by queries launched

to the CNAM database. This service also provides Level 3 the opportunity to load and store its subscriber names in the BellSouth CNAM SCPs.

20.7.5.2 Level 3 shall submit to BellSouth a notice of its intent to access and utilize BellSouth CNAM Database Services. Said notice shall be in writing no less than sixty (60) days prior to Level 3's access to BellSouth's CNAM Database Services and shall be addressed to Level 3's Local Contract Manager.

20.7.5.3 Level 3's End Users' names and numbers related to UNE-P Services and shall be stored in the BellSouth CNAM database, and shall be available, on a per query basis only, to all entities that launch queries to the BellSouth CNAM database. BellSouth, at its sole discretion, may opt to interconnect with and query other calling name databases. In the event BellSouth does not query a third party calling name database that stores the calling party's information, BellSouth cannot deliver the calling party's information to a called End User. In addition, BellSouth cannot deliver the calling party's information where the calling party subscribes to any service that would block or otherwise cause the information to be unavailable.

20.7.5.4 For each Level 3 End User that subscribes to a switch based vertical feature providing calling name information to that End User for calls received, BellSouth will launch a query on a per call basis to the BellSouth CNAM database, or, subject to Section 20.7.5.3 above, to a third party calling name database, to provide calling name information, if available, to Level 3's End User. Level 3 shall pay the rates set forth in Exhibit A, on a per query basis, for each query to the BellSouth CNAM database made on behalf of an Level 3 End User that subscribes to the appropriate vertical features that support Caller ID or a variation thereof. In addition, Level 3 shall reimburse BellSouth for any charges BellSouth pays to third party calling name database providers for queries launched to such database providers for the benefit of Level 3's End Users.

20.7.5.5 BellSouth currently does not have a billing mechanism for CNAM queries. Until a mechanized billing solution is available for CNAM queries, BellSouth shall bill Level 3 at the applicable rates set forth in Exhibit A based on a surrogate of two hundred and fifty-six (256) database queries per month per Level 3's End Users with the Caller ID feature.

20.7.6 SCE/SMS AIN Access

20.7.6.1 BellSouth's SCE/SMS AIN Access shall provide Level 3 the capability to create service applications in a BellSouth SCE and deploy those applications in a BellSouth SMS to a BellSouth SCP.

20.7.6.2 BellSouth's SCE/SMS AIN Access shall provide access to SCE hardware, software, testing and technical support (e.g., help desk, system administrator) resources available to Level 3. Training, documentation, and technical support will address use of SCE and SMS access and administrative functions but will not include support for the creation of a specific service application.

20.7.6.3 BellSouth SCP shall partition and protect Level 3 service logic and data from unauthorized access.

20.7.6.4 When Level 3 selects SCE/SMS AIN Access, BellSouth shall provide training, documentation, and technical support to enable Level 3 to use BellSouth's SCE/SMS AIN Access to create and administer applications.

20.7.6.5 Level 3 access will be provided via remote data connection (e.g., dial-in, ISDN).

20.7.6.6 BellSouth shall allow Level 3 to download data forms and/or tables to BellSouth SCP via BellSouth SMS without intervention from BellSouth.

21. Automatic Location Identification/Data Management System

21.1 911 and E911 Databases

21.1.1 BellSouth shall provide Level 3 with nondiscriminatory access to 911 and E911 databases on an unbundled basis, in accordance with 47 C.F.R. § 51.319 (f).

21.1.2 The ALI/DMS database contains End User information (including name, address, telephone information, and sometimes special information from the local service provider or End User) used to determine to which PSAP to route the call. The ALI/DMS database is used to provide enhanced routing flexibility for E911. Level 3 will be required to provide the BellSouth 911 database vendor daily service order updates to E911 database in accordance with Section 21.3.1 below.

21.1.3 Technical Requirements

21.1.3.1 BellSouth's 911 database vendor shall provide Level 3 the capability of providing updates to the ALI/DMS database through a specified electronic interface. Level 3 shall contact BellSouth's 911 database vendor directly to request interface. Level 3 shall provide updates directly to BellSouth's 911 database vendor on a daily basis. Updates shall be the responsibility of Level 3 and BellSouth shall not be liable for the transactions between Level 3 and BellSouth's 911 database vendor.

21.1.3.2 It is Level 3's responsibility to retrieve and confirm statistical data and to correct errors obtained from BellSouth's 911 database vendor on a daily basis. All errors will be assigned a unique error code and the description of the error and the corrective action is described in the CLEC Users Guide for Facility Based Providers that is found on the BellSouth Interconnection Web site.

21.1.3.3 Level 3 shall conform to the BellSouth standards as described in the CLEC Users Guide to E911 for Facilities Based Providers that is located on the BellSouth's Interconnection Web site: www.interconnection.bellsouth.com/guides.

21.1.3.4 Stranded Unlocks are defined as End User records in BellSouth's ALI/DMS database that have not been migrated for over ninety (90) days to Level 3, as a new provider of local service to the End User. Stranded Unlocks are those End User records that have been "unlocked" by the previous local exchange carrier that provided service to the End User and are open for Level 3 to assume responsibility for such records.

21.1.3.5 Based upon End User record ownership information available in the NPAC database, BellSouth shall provide a Stranded Unlock annual report to Level 3 that reflects all Stranded Unlocks that remain in the ALI/DMS database for over ninety (90) days. Level 3 shall review the Stranded Unlock report, identify its End User records and request to either delete such records or migrate the records to Level 3 within two (2) months following the date of the Stranded Unlock report provided by BellSouth. Level 3 shall reimburse BellSouth for any charges BellSouth's database vendor imposes on BellSouth for the deletion of Level 3's records.

22. Fiber to the Home (FTTH) loops are local loops consisting entirely of fiber optic cable, whether dark or lit, serving an End User's premises or, in the case of predominantly residential multiple dwelling units (MDUs), a fiber optic cable, whether dark or lit, that extends to the MDU minimum point of entry (MPOE). Fiber to the Curb (FTTC) loops are local loops consisting of fiber optic cable connecting to a copper distribution plant that is not more than five hundred (500) feet from the End User's premises or, in the case of predominantly residential MDUs, not more than five hundred (500) feet from the MDU's MPOE. The fiber optic cable in a FTTC loop must connect to a copper distribution plant at a serving area interface from which every other copper distribution subloop also is not more than five hundred (500) feet from the respective End User's premises. FTTH/FTTC loops do not include local loops to predominately business MDUs.

22.1 In new build (Greenfield) areas, where BellSouth has only deployed FTTH/FTTC facilities, BellSouth is under no obligation to provide such FTTH and FTTC Loops. FTTH facilities include fiber loops deployed to the MPOE of a MDU that is predominately residential regardless of the ownership of the inside wiring from the MPOE to each End User in the MDU.

23. A hybrid loop is a local loop, composed of both fiber optic cable, usually in the feeder plant, and copper twisted wire or cable, usually in the distribution plant. BellSouth shall provide Level 3with nondiscriminatory access to the time division multiplexing features, functions and capabilities of such hybrid loop, including DS1 and DS3 capacity under Section 251 where impairment exists, on an unbundled basis to establish a complete transmission path between BellSouth's central office and an End User's premises.

23.1 BellSouth shall not engineer the transmission capabilities of its network in a manner, or engage in any policy, practice, or procedure, that disrupts or degrades access to a local loop or subloop, including the time division multiplexing-based features, functions, and capabilities of a hybrid loop, for which a requesting telecommunications carrier may obtain or has obtained access pursuant to this Attachment.

24. Routine Network Modifications

24.1 BellSouth will perform Routine Network Modifications (RNM) in accordance with FCC 47 CFR 51.319 (a)(7) and (e)(4) for Loops and Dedicated Transport provided under this Attachment. If BellSouth normally provides such RNM for its own customers and has recovered the costs for performing such modifications through the rates set forth in Exhibit A to Attachment 2 of the Agreement, then BellSouth will perform such RNM at no additional charge. A routine network modification is an activity that BellSouth regularly undertakes for its own customers. Routine network modifications include, but are not limited to, rearranging or splicing of cable; adding an equipment case; adding a doubler or repeater; adding a smart jack; installing a repeater shelf; adding a line card; and deploying a new multiplexer or reconfiguring an existing multiplexer. Routine network modifications may entail activities such as accessing manholes, deploying bucket trucks to reach aerial cable, and installing equipment casings. Routine network modifications do not include the construction of a new loop, or the installation of new aerial or buried cable for a CLEC.

24.2 RNM will be performed within the intervals established for the Network Element and subject to the performance measurements and associated remedies set forth in Attachment 9 of this Agreement. If BellSouth does not normally provide such RNM for its own customers, and has not recovered the costs of such RNM in the rates set forth in Exhibit A to Attachment 2 of the Agreement, then such request will be handled as a project on an individual case basis. BellSouth will provide a price quote for the request and, upon receipt of payment from Level 3, BellSouth will perform the RNM.

25. Line Conditioning

25.1 Line Conditioning is defined as routine network modification that BellSouth regularly undertakes to provide xDSL services to its own customers. This may include the removal of any device, from a copper Loop or copper Subloop that may diminish the capability of the Loop or Subloop to deliver high-speed switched wireline telecommunications capability, including xDSL service. Such devices include, load coils, excessive bridged taps, low pass filters, and range extenders. Excessive bridged taps are bridged taps that serve no network design purpose and that are beyond the limits set according to industry standards and/or the BellSouth's TR 73600 Unbundled Local Loop Technical Specification.

25.2 BellSouth will remove load coils only on copper Loops and Subloops that are less than eighteen thousand (18,000) feet in length.

25.3 Any copper loop being ordered by Level 3 which has over 6,000 feet of combined bridged tap will be modified, upon request from Level 3, so that the loop will have a maximum of 6,000 feet of bridged tap. This modification will be performed at no additional charge to Level 3. Line conditioning orders that require the removal of other bridged tap that serves no network design purpose on a copper Loop that will result in a combined total of bridged tap between two thousand five hundred (2,500)

and six thousand (6,000) feet will be performed at the rates set forth in Exhibit A to Attachment 2 of the Agreement.

25.4 Level 3 may request removal of any unnecessary and non excessive bridged tap (bridged tap between zero (0) and two thousand five hundred (2,500) feet which serves no network design purpose), at rates pursuant to BellSouth's SC Process as mutually agreed to by the Parties.

25.5 Rates for Unbundled Loop Modification (ULM) are as set forth in Exhibit A to Attachment 2 of the Agreement.

25.6 BellSouth will not modify a Loop in such a way that it no longer meets the technical parameters of the original Loop type (e.g., voice grade, ADSL, etc.) being ordered.

25.7 If Level 3 requests ULM on a reserved facility for a new Loop order, BellSouth may perform a pair change and provision a different Loop facility in lieu of the reserved facility with ULM if feasible. The Loop provisioned will meet or exceed specifications of the requested Loop facility as modified. Level 3 will not be charged for ULM if a different Loop is provisioned. For Loops that require a DLR or its equivalent, BellSouth will provide LMU detail of the Loop provisioned.

25.8 Level 3 will request Loop make up information pursuant to this Attachment prior to submitting a service inquiry and/or a LSR for the Loop type that Level 3 desires BellSouth to condition.

25.9 When requesting ULM for a Loop that BellSouth has previously provisioned for Level 3, Level 3 will submit a SI to BellSouth. If a spare Loop facility that meets the Loop modification specifications requested by Level 3 is available at the location for which the ULM was requested, Level 3 will have the option to change the Loop facility to the qualifying spare facility rather than to provide ULM. In the event that BellSouth changes the Loop facility in lieu of providing ULM, Level 3 will not be charged for ULM but will only be charged the service order charges for submitting an order.

26. In FTTH/FTTC overbuild situations where BellSouth also has copper Loops, BellSouth may make those copper Loops available to Level 3 on an unbundled basis, until such time as BellSouth chooses to retire those copper Loops using the FCC's network disclosure requirements. Alternatively, BellSouth will offer a 64 Kbps second voice grade channel over its FTTH/FTTC facilities. BellSouth's retirement of copper Loops must comply with applicable law.

26.1 Furthermore, in FTTH/FTTC overbuild areas where BellSouth has not yet retired copper facilities, BellSouth is not obligated to ensure that such copper Loops in that area are capable of transmitting signals prior to receiving a request for access to such Loops by Level 3. If a request is received by BellSouth for a copper Loop, and the copper facilities have not yet been retired, BellSouth will restore the copper Loop to

serviceable condition if technically feasible. In these instances of Loop orders in a FTTH/FTTC overbuild area, BellSouth's standard Loop provisioning interval will not apply, and the order will be handled on a project basis by which the Parties will negotiate the applicable provisioning interval.

27. EELs Audit provisions

27.1 BellSouth may, on an annual basis audit Level 3's records in order to verify compliance with the high capacity EEL eligibility criteria. To invoke its limited right to audit, BellSouth will send a Notice of Audit to Level 3. Such Notice of Audit will be delivered to Level 3 no less than thirty (30) calendar days prior to the date upon which BellSouth seeks to commence an audit.

27.2 The audit shall be conducted by a third party independent auditor, retained and paid for by BellSouth. The audit must be performed in accordance with the standards established by the American Institute for Certified Public Accountants (AICPA) which will require the auditor to perform an "examination engagement" and issue an opinion regarding Level 3's compliance with the high capacity EEL eligibility criteria. AICPA standards and other AICPA requirements will be used to determine the independence of an auditor. The independent auditor's report will conclude whether Level 3 complied in all material respects with the applicable service eligibility criteria. Consistent with standard auditing practices, such audits require compliance testing designed by the independent auditor.

27.3 To the extent the independent auditor's report concludes that Level 3 failed to comply with the service eligibility criteria, Level 3 must true-up any difference in payments, convert all noncompliant circuits to the appropriate service, and make the correct payments on a going-forward basis.

27.4 To the extent the independent auditor's report concludes that Level 3 failed to comply in all material respects with the service eligibility criteria, Level 3 shall reimburse BellSouth for the cost of the independent auditor. To the extent the independent auditor's report concludes that Level 3 did comply in all material respects with the service eligibility criteria, BellSouth will reimburse Level 3 for its reasonable and demonstrable costs associated with the audit. Level 3 will maintain appropriate documentation to support its certifications. The Parties shall provide such reimbursement within thirty (30) calendar days of receipt of a statement of such costs.

28. Level 3 shall not obtain a Network Element for the exclusive provision of mobile wireless services or interexchange services.

29. Facilities that do not terminate at a demarcation point at an End User premises, including, by way of example, but not limited to, facilities that terminate to another carrier's switch or premises, a cell site, Mobile Switching Center or base station, do not constitute local Loops under Section 251, except to the extent that Level 3 may require Loops to such locations for the purpose of providing telecommunications services to its personnel at those locations.

30. Subloop Elements.

30.1 Where facilities permit, BellSouth shall offer access to its Unbundled Subloop (USL) elements as specified herein.

30.2 Unbundled Subloop Distribution (USLD)

30.2.1 The USLD facility is a dedicated transmission facility that BellSouth provides from an End User's point of demarcation to a BellSouth cross-connect device. The BellSouth cross-connect device may be located within a remote terminal (RT) or a stand-alone cross-box in the field or in the equipment room of a building. The USLD media is a copper twisted pair that can be provisioned as a 2-wire or 4-wire facility. BellSouth will make available the following subloop distribution offerings where facilities exist:

USLD – Voice Grade (USLD-VG)
Unbundled Copper Subloop (UCSL)
USLD – Intrabuilding Network Cable (USLD-INC (aka riser cable))

30.2.2 USLD-VG is a copper subloop facility from the cross-box in the field up to and including the point of demarcation at the End User's premises and may have load coils.

30.2.3 UCSL is a copper facility eighteen thousand (18,000) feet or less in length provided from the cross-box in the field up to and including the End User's point of demarcation. If available, this facility will not have any intervening equipment such as load coils between the End User and the cross-box.

30.2.4 If Level 3 requests a UCSL and it is not available, Level 3 may request the copper Subloop facility be modified pursuant to the ULM process to remove load coils and/or excessive bridged taps. If load coils and/or excessive bridged taps are removed, the facility will be classified as a UCSL.

30.2.5 USLD-INC is the distribution facility owned or controlled by BellSouth inside a building or between buildings on the same property that is not separated by a public street or road. USLD-INC includes the facility from the cross-connect device in the building equipment room up to and including the point of demarcation at the End User's premises.

30.2.6 Upon request for USLD-INC from Level 3, BellSouth will install a cross-connect panel in the building equipment room for the purpose of accessing USLD-INC pairs from a building equipment room. The cross-connect panel will function as a single point of interconnection (SPOI) for USLD-INC and will be accessible by multiple carriers as space permits. BellSouth will place cross-connect blocks in twenty five (25) pair increments for Level 3's use on this cross-connect panel. Level 3 will be responsible for connecting its facilities to the twenty five (25) pair cross-connect block(s).

30.2.7 For access to Voice Grade USLD and UCSL, Level 3 shall install a cable to the BellSouth cross-box pursuant to the terms and conditions for physical collocation for remote sites set forth in Attachment 4. This cable would be connected by a BellSouth

technician within the BellSouth cross-box during the set-up process. Level 3's cable pairs can then be connected to BellSouth's USL within the BellSouth cross-box by the BellSouth technician.

30.2.8 Through the SI process, BellSouth will determine whether access to USLs at the location requested by Level 3 is technically feasible and whether sufficient capacity exists in the cross-box. If existing capacity is sufficient to meet Level 3's request, then BellSouth will perform the site set-up as described in the CLEC Information Package, located at BellSouth's Interconnection Web site: www.interconnection.bellsouth.com/products/html/unes.html.

30.2.9 The site set-up must be completed before Level 3 can order Subloop pairs. For the site set-up in a BellSouth cross-connect box in the field, BellSouth will perform the necessary work to splice Level 3's cable into the cross-connect box. For the site set-up inside a building equipment room, BellSouth will perform the necessary work to install the cross-connect panel and the connecting block(s) that will be used to provide access to the requested USLs.

30.2.10 Once the site set-up is complete, Level 3 will request Subloop pairs through submission of a LSR form to the LCSC. OC is required with USL pair provisioning when Level 3 requests reuse of an existing facility, and the OC charge shall be billed in addition to the USL pair rate. For expedite requests by Level 3 for Subloop pairs, expedite charges will apply for intervals less than five (5) days.

30.2.11 USLs will be provided in accordance with BellSouth's TR73600 Unbundled Local Loop Technical Specifications.

30.3 Unbundled Network Terminating Wire (UNTW)

30.3.1 UNTW is unshielded twisted copper wiring that is used to extend circuits from an intra-building network cable terminal or from a building entrance terminal to an individual End User's point of demarcation. It is the final portion of the Loop that in multi-subscriber configurations represents the point at which the network branches out to serve individual subscribers.

30.3.2 This element will be provided in MDUs and/or Multi-Tenants Units (MTUs) where either Party owns wiring all the way to the End User's premises. Neither Party will provide this element in locations where the property owner provides its own wiring to the End User's premises, where a third party owns the wiring to the End User's premises.

30.3.3 Requirements

30.3.3.1 On a multi-unit premises, upon request of the other Party (Requesting Party), the Party owning the network terminating wire (Provisioning Party) will provide access to UNTW pairs on an Access Terminal that is suitable for use by multiple carriers at each Garden Terminal or Wiring Closet.

30.3.3.2 The Provisioning Party shall not be required to install new or additional NTW beyond existing NTW to provision the services of the Requesting Party.

30.3.3.3 In existing MDUs and/or MTUs in which BellSouth does not own or control wiring (INC/NTW) to the End Users premises, and Level 3 does own or control such wiring, Level 3 will install UNTW Access Terminals for BellSouth under the same terms and conditions as BellSouth provides UNTW Access Terminals to Level 3.

30.3.3.4 In situations in which BellSouth activates a UNTW pair, BellSouth will compensate Level 3 for each pair activated commensurate to the price specified in Level 3's Agreement.

30.3.3.5 Upon receipt of the UNTW SI requesting access to the Provisioning Party's UNTW pairs at a multi-unit premises, representatives of both Parties will participate in a meeting at the site of the requested access. The purpose of the site visit will include discussion of the procedures for installation and location of the Access Terminals. By request of the Requesting Party, an Access Terminal will be installed either adjacent to each of the Provisioning Party's Garden Terminal or inside each Wiring Closet. The Requesting Party will deliver and connect its central office facilities to the UNTW pairs within the Access Terminal. The Requesting Party may access any available pair on an Access Terminal. A pair is available when a pair is not being utilized to provide service or where the End User has requested a change in its local service provider to the Requesting Party. Prior to connecting the Requesting Party's service on a pair previously used by the Provisioning Party, the Requesting Party is responsible for ensuring the End User is no longer using the Provisioning Party's service or another CLEC's service before accessing UNTW pairs.

30.3.3.6 Access Terminal installation intervals will be established on an individual case basis.

30.3.3.7 The Requesting Party is responsible for obtaining the property owner's permission for the Provisioning Party to install an Access Terminal(s) on behalf of the Requesting Party. The submission of the SI by the Requesting Party will serve as certification by the Requesting Party that such permission has been obtained. If the property owner objects to Access Terminal installations that are in progress or within thirty (30) days after completion and demands removal of Access Terminals, the Requesting Party will be responsible for costs associated with removing Access Terminals and restoring the property to its original state prior to Access Terminals being installed.

30.3.3.8 The Requesting Party shall indemnify and hold harmless the Provisioning Party against any claims of any kind that may arise out of the Requesting Party's failure to obtain the property owner's permission. The Requesting Party will be billed for nonrecurring and recurring charges for accessing UNTW pairs at the time the Requesting Party activates the pair(s). The Requesting Party will notify the Provisioning Party within five (5) business days of activating UNTW pairs using the LSR form.

30.3.3.9 If a trouble exists on a UNTW pair, the Requesting Party may use an alternate spare pair that serves that End User if a spare pair is available. In such cases, the Requesting Party will re-terminate its existing jumper from the defective pair to the spare pair. Alternatively, the Requesting Party will isolate and report troubles in the manner specified by the Provisioning Party. The Requesting Party must tag the UNTW pair that requires repair. If the Provisioning Party dispatches a technician on

a reported trouble call and no UNTW trouble is found, the Provisioning Party will charge Requesting Party for time spent on the dispatch and testing the UNTW pair(s).

30.3.3.10 If the Requesting Party initiates the Access Terminal installation and the Requesting Party has not activated at least ten percent (10%) of the capacity of the Access Terminal installed pursuant to the Requesting Party's request for an Access Terminal within six (6) months of installation of the Access Terminal, the Provisioning Party will bill the Requesting Party a nonrecurring charge equal to the actual cost of provisioning the Access Terminal.

30.3.3.11 If the Provisioning Party determines that the Requesting Party is using the UNTW pairs without reporting the activation of the pairs, the Requesting Party will be billed for the use of that pair back to the date the End User began receiving service from the Requesting Party at that location. Upon request, the Requesting Party will provide copies of its billing record to substantiate such date. If the Requesting Party fails to provide such records, then the Provisioning Party will bill the Requesting Party back to the date of the Access Terminal installation.

| UNBUNDLED NETWORK ELEMENTS - Florida | | | | | | | | | | | | | Attachment: 2 | | Exhibit: A | |
|---|---|---|---|---|---|---|---|---|---|---|---|---|---|---|---|---|
| CATEGORY | RATE ELEMENTS | Interim | Zone | BCS | USOC | RATES ($) | | | | | Svc Order Submitted Elec per LSR | Svc Order Submitted Manually per LSR | Incremental Charge - Manual Svc Order vs. Electronic-1st | Incremental Charge - Manual Svc Order vs. Electronic-Add'l | Incremental Charge - Manual Svc Order vs. Electronic-Disc 1st | Incremental Charge - Manual Svc Order vs. Electronic-Disc Add'l |
| | | | | | | Rec | Nonrecurring | | Nonrecurring Disconnect | | OSS Rates ($) | | | | | |
| | | | | | | | First | Add'l | First | Add'l | SOMEC | SOMAN | SOMAN | SOMAN | SOMAN | SOMAN |
| UNBUNDLED EXCHANGE ACCESS LOOP | | | | | | | | | | | | | | | | |
| 2-WIRE ANALOG VOICE GRADE LOOP | | | | | | | | | | | | | | | | |
| | Switch-As-Is Conversion rate per UNE Loop, Single LSR, (per DS0) | | | UEA | URESL | | 8.98 | 8.98 | | | | | | | | |
| | Switch-As-Is Conversion rate per UNE Loop, Spreadsheet, (per DS0) | | | UEA | URESP | | 8.98 | 8.98 | | | | | | | | |
| 4-WIRE ANALOG VOICE GRADE LOOP | | | | | | | | | | | | | | | | |
| | Switch-As-Is Conversion rate per UNE Loop, Single LSR, (per DS0) | | | UEA | URESL | | 8.98 | 8.98 | | | | | | | | |
| | Switch-As-Is Conversion rate per UNE Loop, Spreadsheet, (per DS0) | | | UEA | URESP | | 8.98 | 8.98 | | | | | | | | |
| 4-WIRE DS1 DIGITAL LOOP | | | | | | | | | | | | | | | | |
| | Switch-As-Is Conversion rate per UNE Loop, Single LSR, (per DS1) | | | USL | URESL | | 8.98 | 8.98 | | | | | | | | |
| | Switch-As-Is Conversion rate per UNE Loop, Spreadsheet, (per DS1) | | | USL | URESP | | 8.98 | 8.98 | | | | | | | | |
| 4-WIRE 19.2, 56 OR 64 KBPS DIGITAL GRADE LOOP | | | | | | | | | | | | | | | | |
| | Switch-As-Is Conversion rate per UNE Loop, Single LSR, (per DS0) | | | UDL | URESL | | 8.98 | 8.98 | | | | | | | | |
| | Switch-As-Is Conversion rate per UNE Loop, Spreadsheet, (per DS0) | | | UDL | URESP | | 8.98 | 8.98 | | | | | | | | |
| UNE LOOP COMMINGLING | | | | | | | | | | | | | | | | |
| 2-WIRE ANALOG VOICE GRADE LOOP - COMMINGLING | | | | | | | | | | | | | | | | |
| | 2-Wire Analog Voice Grade Loop - Service Level 2 w/Loop or Ground Start Signaling - Zone 1 | | 1 | NTCVG | UEAL2 | 12.24 | 135.75 | 82.47 | 63.53 | 12.01 | | | | | | |
| | 2-Wire Analog Voice Grade Loop - Service Level 2 w/Loop or Ground Start Signaling - Zone 2 | | 2 | NTCVG | UEAL2 | 17.40 | 135.75 | 82.47 | 63.53 | 12.01 | | | | | | |
| | 2-Wire Analog Voice Grade Loop - Service Level 2 w/Loop or Ground Start Signaling - Zone 3 | | 3 | NTCVG | UEAL2 | 30.87 | 135.75 | 82.47 | 63.53 | 12.01 | | | | | | |
| | 2-Wire Analog Voice Grade Loop - Service Level 2 w/Reverse Battery Signaling - Zone 1 | | 1 | NTCVG | UEAR2 | 12.24 | 135.75 | 82.47 | 63.53 | 12.01 | | | | | | |
| | 2-Wire Analog Voice Grade Loop - Service Level 2 w/Reverse Battery Signaling - Zone 2 | | 2 | NTCVG | UEAR2 | 17.40 | 135.75 | 82.47 | 63.53 | 12.01 | | | | | | |
| | 2-Wire Analog Voice Grade Loop - Service Level 2 w/Reverse Battery Signaling - Zone 3 | | 3 | NTCVG | UEAR2 | 30.87 | 135.75 | 82.47 | 63.53 | 12.01 | | | | | | |
| | Switch-As-Is Conversion rate per UNE Loop, Single LSR, (per DS0) | | | NTCVG | URESL | | 8.98 | 8.98 | | | | | | | | |
| | Switch-As-Is Conversion rate per UNE Loop, Spreadsheet, (per DS0) | | | NTCVG | URESP | | 8.98 | 8.98 | | | | | | | | |
| | CLEC to CLEC Conversion Charge without outside dispatch | | | NTCVG | UREWO | | 87.71 | 36.35 | | | | | | | | |
| | Loop Tagging - Service Level 2 (SL2) | | | NTCVG | URETL | | 11.21 | 1.10 | | | | | | | | |
| 4-WIRE ANALOG VOICE GRADE LOOP - COMMINGLING | | | | | | | | | | | | | | | | |
| | 4-Wire Analog Voice Grade Loop - Zone 1 | | 1 | NTCVG | UEAL4 | 18.89 | 167.86 | 115.15 | 67.08 | 15.56 | | | | | | |
| | 4-Wire Analog Voice Grade Loop - Zone 2 | | 2 | NTCVG | UEAL4 | 26.84 | 167.86 | 115.15 | 67.08 | 15.56 | | | | | | |
| | 4-Wire Analog Voice Grade Loop - Zone 3 | | 3 | NTCVG | UEAL4 | 47.62 | 167.86 | 115.15 | 67.08 | 15.56 | | | | | | |
| | Switch-As-Is Conversion rate per UNE Loop, Single LSR, (per DS0) | | | NTCVG | URESL | | 8.98 | 8.98 | | | | | | | | |
| | Switch-As-Is Conversion rate per UNE Loop, Spreadsheet, (per DS0) | | | NTCVG | URESP | | 8.98 | 8.98 | | | | | | | | |
| | CLEC to CLEC Conversion Charge without outside dispatch | | | NTCVG | UREWO | | 87.71 | 36.35 | | | | | | | | |
| 4-WIRE DS1 DIGITAL LOOP - COMMINGLING | | | | | | | | | | | | | | | | |
| | 4-Wire DS1 Digital Loop - Zone 1 | | 1 | NTCD1 | USLXX | 70.74 | 313.75 | 181.48 | 61.22 | 13.53 | | | | | | |
| | 4-Wire DS1 Digital Loop - Zone 2 | | 2 | NTCD1 | USLXX | 100.54 | 313.75 | 181.48 | 61.22 | 13.53 | | | | | | |
| | 4-Wire DS1 Digital Loop - Zone 3 | | 3 | NTCD1 | USLXX | 178.39 | 313.75 | 181.48 | 61.22 | 13.53 | | | | | | |
| | Switch-As-Is Conversion rate per UNE Loop, Single LSR, (per DS1) | | | NTCD1 | URESL | | 8.98 | 8.98 | | | | | | | | |
| | Switch-As-Is Conversion rate per UNE Loop, Spreadsheet, (per DS1) | | | NTCD1 | URESP | | 8.98 | 8.98 | | | | | | | | |
| | CLEC to CLEC Conversion Charge without outside dispatch | | | NTCD1 | UREWO | | 101.07 | 43.04 | | | | | | | | |
| 4-WIRE 19.2, 56 OR 64 KBPS DIGITAL GRADE LOOP - COMMINGLING | | | | | | | | | | | | | | | | |
| | 4 Wire Unbundled Digital Loop 2.4 Kbps - Zone 1 | | 1 | NTCUD | UDL2X | 22.20 | 161.56 | 108.85 | 67.08 | 15.56 | | | | | | |
| | 4 Wire Unbundled Digital Loop 2.4 Kbps - Zone 2 | | 2 | NTCUD | UDL2X | 31.56 | 161.56 | 108.85 | 67.08 | 15.56 | | | | | | |
| | 4 Wire Unbundled Digital Loop 2.4 Kbps - Zone 3 | | 3 | NTCUD | UDL2X | 55.99 | 161.56 | 108.85 | 67.08 | 15.56 | | | | | | |
| | 4 Wire Unbundled Digital Loop 4.8 Kbps - Zone 1 | | 1 | NTCUD | UDL4X | 22.20 | 161.56 | 108.85 | 67.08 | 15.56 | | | | | | |
| | 4 Wire Unbundled Digital Loop 4.8 Kbps - Zone 2 | | 2 | NTCUD | UDL4X | 31.56 | 161.56 | 108.85 | 67.08 | 15.56 | | | | | | |
| | 4 Wire Unbundled Digital Loop 4.8 Kbps - Zone 3 | | 3 | NTCUD | UDL4X | 55.99 | 161.56 | 108.85 | 67.08 | 15.56 | | | | | | |
| | 4 Wire Unbundled Digital Loop 9.6 Kbps - Zone 1 | | 1 | NTCUD | UDL9X | 22.20 | 161.56 | 108.85 | 67.08 | 15.56 | | | | | | |
| | 4 Wire Unbundled Digital Loop 9.6 Kbps - Zone 2 | | 2 | NTCUD | UDL9X | 31.56 | 161.56 | 108.85 | 67.08 | 15.56 | | | | | | |
| | 4 Wire Unbundled Digital Loop 9.6 Kbps - Zone 3 | | 3 | NTCUD | UDL9X | 55.99 | 161.56 | 108.85 | 67.08 | 15.56 | | | | | | |
| | 4 Wire Unbundled Digital 19.2 Kbps - Zone 1 | | 1 | NTCUD | UDL19 | 22.20 | 161.56 | 108.85 | 67.08 | 15.56 | | | | | | |
| | 4 Wire Unbundled Digital 19.2 Kbps - Zone 2 | | 2 | NTCUD | UDL19 | 31.56 | 161.56 | 108.85 | 67.08 | 15.56 | | | | | | |
| | 4 Wire Unbundled Digital 19.2 Kbps - Zone 3 | | 3 | NTCUD | UDL19 | 55.99 | 161.56 | 108.85 | 67.08 | 15.56 | | | | | | |
| | 4 Wire Unbundled Digital Loop 56 Kbps - Zone 1 | | 1 | NTCUD | UDL56 | 22.20 | 161.56 | 108.85 | 67.08 | 15.56 | | | | | | |
| | 4 Wire Unbundled Digital Loop 56 Kbps - Zone 2 | | 2 | NTCUD | UDL56 | 31.56 | 161.56 | 108.85 | 67.08 | 15.56 | | | | | | |
| | 4 Wire Unbundled Digital Loop 56 Kbps - Zone 3 | | 3 | NTCUD | UDL56 | 55.99 | 161.56 | 108.85 | 67.08 | 15.56 | | | | | | |
| | 4 Wire Unbundled Digital Loop 64 Kbps - Zone 1 | | 1 | NTCUD | UDL64 | 22.20 | 161.56 | 108.85 | 67.08 | 15.56 | | | | | | |
| | 4 Wire Unbundled Digital Loop 64 Kbps - Zone 2 | | 2 | NTCUD | UDL64 | 31.56 | 161.56 | 108.85 | 67.08 | 15.56 | | | | | | |

| UNBUNDLED NETWORK ELEMENTS - Florida | | | | | | | | | | | | | Attachment: 2 | | Exhibit: A | |
|---|---|---|---|---|---|---|---|---|---|---|---|---|---|---|---|---|
| CATEGORY | | RATE ELEMENTS | Interim | Zone | BCS | USOC | RATES ($) | | | | | Svc Order Submitted Elec per LSR | Svc Order Submitted Manually per LSR | Incremental Charge - Manual Svc Order vs. Electronic-1st | Incremental Charge - Manual Svc Order vs. Electronic-Add'l | Incremental Charge - Manual Svc Order vs. Electronic-Disc 1st | Incremental Charge - Manual Svc Order vs. Electronic-Disc Add'l |
| | | | | | | | Rec | Nonrecurring | | Nonrecurring Disconnect | | OSS Rates ($) | | | | | |
| | | | | | | | | First | Add'l | First | Add'l | SOMEC | SOMAN | SOMAN | SOMAN | SOMAN | SOMAN |
| | | 4 Wire Unbundled Digital Loop 64 Kbps - Zone 3 | | 3 | NTCUD | UDL64 | 55.99 | 161.56 | 108.85 | 67.08 | 15.56 | | | | | | |
| | | Switch-As-Is Conversion rate per UNE Loop, Single LSR, (per DS0) | | | NTCUD | URESL | | 8.98 | 8.98 | | | | | | | | |
| | | Switch-As-Is Conversion rate per UNE Loop, Spreadsheet, (per DS0) | | | NTCUD | URESP | | 8.98 | 8.98 | | | | | | | | |
| | | CLEC to CLEC Conversion Charge without outside dispatch | | | NTCUD | UREWO | | 102.11 | 49.74 | | | | | | | | |
| | | Order Coordination for Specified Conversion Time (per LSR) | | | NTCVG, NTCUD, NTCD1 | OCOSL | | 23.02 | | | | | | | | | |
| COMMINGLING | | | | | | | | | | | | | | | | | |
| | | Commingling Authorization | | | UNCVX, UNCDX, UNC1X, UNC3X, UNCSX, U1TD1, U1TD3, U1TS1, UE3, UDLSX, U1TVX, U1TDX, U1TUB, ULDVX, ULDD1, ULDD3, ULDS1 | CMGAU | 0.00 | 0.00 | 0.00 | 0.00 | 0.00 | | | | | | |
| | Commingled (UNE part of single bandwidth circuit) | | | | | | | | | | | | | | | | |
| | | Commingled VG COCI | | | XDV2X, NTCVG | 1D1VG | 1.38 | 6.71 | 4.84 | 0.00 | 0.00 | | | | | | |
| | | Commingled Digital COCI | | | XDV6X, NTCUD | 1D1DD | 2.10 | 6.71 | 4.84 | 0.00 | 0.00 | | | | | | |
| | | Commingled ISDN COCI | | | XDD4X | UC1CA | 3.66 | 6.71 | 4.84 | 0.00 | 0.00 | | | | | | |
| | | Commingled 2-wire VG Interoffice Channel | | | XDV2X | U1TV2 | 25.32 | 94.70 | 52.59 | 45.28 | 18.03 | | | | | | |
| | | Commingled 4-wire VG Interoffice Channel | | | XDV6X | U1TV4 | 22.58 | 94.70 | 52.59 | 45.28 | 18.03 | | | | | | |
| | | Commingled 56kbps Interoffice Channel | | | XDD4X | U1TD5 | 18.44 | 94.70 | 52.59 | 45.28 | 18.03 | | | | | | |
| | | Commingled 64kbps Interoffice Channel | | | XDD4X | U1TD6 | 18.44 | 94.70 | 52.59 | 45.28 | 18.03 | | | | | | |
| | | Commingled VG/DS0 Interoffice Channel Mileage | | | XDV2X, XDV6X, XDD4X | 1L5XX | 0.0091 | | | | | | | | | | |
| | | Commingled 2-wire Local Loop Zone 1 | | 1 | XDV2X | UEAL2 | 12.24 | 127.59 | 60.54 | 48.00 | 6.31 | | | | | | |
| | | Commingled 2-wire Local Loop Zone 2 | | 2 | XDV2X | UEAL2 | 17.40 | 127.59 | 60.54 | 48.00 | 6.31 | | | | | | |
| | | Commingled 2-wire Local Loop Zone 3 | | 3 | XDV2X | UEAL2 | 30.87 | 127.59 | 60.54 | 48.00 | 6.31 | | | | | | |
| | | Commingled 4-wire Local Loop Zone 1 | | 1 | XDV6X | UEAL4 | 18.89 | 127.59 | 60.54 | 48.00 | 6.31 | | | | | | |
| | | Commingled 4-wire Local Loop Zone 2 | | 2 | XDV6X | UEAL4 | 26.84 | 127.59 | 60.54 | 48.00 | 6.31 | | | | | | |
| | | Commingled 4-wire Local Loop Zone 3 | | 3 | XDV6X | UEAL4 | 47.62 | 127.59 | 60.54 | 48.00 | 6.31 | | | | | | |
| | | Commingled 56kbps Local Loop Zone 1 | | 1 | XDD4X | UDL56 | 22.20 | 127.59 | 60.54 | 48.00 | 6.31 | | | | | | |
| | | Commingled 56kbps Local Loop Zone 2 | | 2 | XDD4X | UDL56 | 31.56 | 127.59 | 60.54 | 48.00 | 6.31 | | | | | | |
| | | Commingled 56kbps Local Loop Zone 3 | | 3 | XDD4X | UDL56 | 55.99 | 127.59 | 60.54 | 48.00 | 6.31 | | | | | | |
| | | Commingled 64kbps Local Loop Zone 1 | | 1 | XDD4X | UDL64 | 22.20 | 127.59 | 60.54 | 48.00 | 6.31 | | | | | | |
| | | Commingled 64kbps Local Loop Zone 2 | | 2 | XDD4X | UDL64 | 31.56 | 127.59 | 60.54 | 48.00 | 6.31 | | | | | | |
| | | Commingled 64kbps Local Loop Zone 3 | | 3 | XDD4X | UDL64 | 55.99 | 127.59 | 60.54 | 48.00 | 6.31 | | | | | | |
| | | Commingled ISDN Local Loop Zone 1 | | 1 | XDD4X | U1L2X | 19.28 | 127.59 | 60.54 | 48.00 | 6.31 | | | | | | |
| | | Commingled ISDN Local Loop Zone 2 | | 2 | XDD4X | U1L2X | 27.40 | 127.59 | 60.54 | 48.00 | 6.31 | | | | | | |
| | | Commingled ISDN Local Loop Zone 3 | | 3 | XDD4X | U1L2X | 48.62 | 127.59 | 60.54 | 48.00 | 6.31 | | | | | | |
| | | Commingled DS1 COCI | | | XDH1X, NTCD1 | UC1D1 | 13.76 | 6.71 | 4.84 | 0.00 | 0.00 | | | | | | |
| | | Commingled DS1 Interoffice Channel | | | XDH1X | U1TF1 | 88.44 | 174.46 | 122.46 | 45.61 | 17.95 | | | | | | |
| | | Commingled DS1 Interoffice Channel Mileage | | | XDH1X | 1L5XX | 0.1856 | | | | | | | | | | |
| | | Commingled DS1/DS0 Channel System | | | XDH1X | MQ1 | 146.77 | 57.28 | 14.74 | | | | | | | | |
| | | Commingled DS1 Local Loop Zone 1 | | 1 | XDH1X | USLXX | 70.74 | 217.75 | 121.62 | 51.44 | 14.45 | | | | | | |
| | | Commingled DS1 Local Loop Zone 2 | | 2 | XDH1X | USLXX | 100.54 | 217.75 | 121.62 | 51.44 | 14.45 | | | | | | |
| | | Commingled DS1 Local Loop Zone 3 | | 3 | XDH1X | USLXX | 178.39 | 217.75 | 121.62 | 51.44 | 14.45 | | | | | | |
| | | Commingled DS3 Local Loop | | | HFQC6 | UE3PX | 386.88 | 244.42 | 154.73 | 67.10 | 26.27 | | | | | | |
| | | Commingled DS3/STS-1 Local Loop Mileage | | | HFQC6, HFRST | 1L5ND | 10.92 | | | | | | | | | | |
| | | Commingled STS-1 Local Loop | | | HFRST | UDLS1 | 426.60 | 244.42 | 154.73 | 67.10 | 26.27 | | | | | | |
| | | Commingled DS3/DS1 Channel System | | | HFQC6 | MQ3 | 211.19 | 115.60 | 56.54 | 12.16 | 4.26 | | | | | | |
| | | Commingled DS3 Interoffice Channel | | | HFQC6 | U1TF3 | 1,071.00 | 320.00 | 138.20 | 38.60 | 18.81 | | | | | | |
| | | Commingled DS3 Interoffice Channel Mileage | | | HFQC6 | 1L5XX | 3.87 | | | | | | | | | | |
| | | Commingled STS-1Interoffice Channel | | | HFRST | U1TFS | 1,056.00 | 320.00 | 138.20 | 38.60 | 18.81 | | | | | | |
| | | Commingled STS-1Interoffice Channel Mileage | | | HFRST | 1L5XX | 3.87 | | | | | | | | | | |
| | | Commingled Dark Fiber - Interoffice Transport, Per Four Fiber Strands, Per Route Mile Or Fraction Thereof | | | HEQDL | 1L5DF | 26.85 | | | | | | | | | | |
| | | Commingled Dark Fiber - Interoffice Transport, Per Four Fiber Strands, Per Route Mile Or Fraction Thereof | | | HEQDL | UDF14 | | 751.34 | 193.88 | | | | | | | | |
| LINE SHARING | | | | | | | | | | | | | | | | | |
| | NOTE 1: The Line Sharing monthly recurring rates for all installations completed on or after October 02, 2003 shall be billed as follows: | | | | | | | | | | | | | | | | |
| | NOTE 1: 10/02/2003 – 10/01/2004: 25% of the rate for an unbundled copper loop non-designed ("UCLND") | | | | | | | | | | | | | | | | |
| | NOTE 1: 10/02/2004 – 10/01/2005: 50% of the rate for UCLND | | | | | | | | | | | | | | | | |

| UNBUNDLED NETWORK ELEMENTS - Florida | | | | | | | | | | | | | | Attachment: 2 | | Exhibit: A | |
|---|---|---|---|---|---|---|---|---|---|---|---|---|---|---|---|---|---|
| CATEGORY | | RATE ELEMENTS | Interim | Zone | BCS | USOC | RATES ($) | | | | | Svc Order Submitted Elec per LSR | Svc Order Submitted Manually per LSR | Incremental Charge - Manual Svc Order vs. Electronic-1st | Incremental Charge - Manual Svc Order vs. Electronic-Add'l | Incremental Charge - Manual Svc Order vs. Electronic-Disc 1st | Incremental Charge - Manual Svc Order vs. Electronic-Disc Add'l |
| | | | | | | | Rec | Nonrecurring | | Nonrecurring Disconnect | | OSS Rates ($) | | | | | |
| | | | | | | | | First | Add'l | First | Add'l | SOMEC | SOMAN | SOMAN | SOMAN | SOMAN | SOMAN |
| | | **NOTE 1: 10/02/2005 – 10/01/2006: 75% of the rate for UCLND** | | | | | | | | | | | | | | | |
| | | **NOTE 1: Above will apply to USOCS: ULSDT and ULSCT** | | | | | | | | | | | | | | | |
| | | ****NOTE 2: The Line Sharing monthly recurring rates with USOCs ULSDC and ULSCC applies only to circuits installed and inservice on or before October 1, 2003** | | | | | | | | | | | | | | | |
| | | **LINE SHARING** | | | | | | | | | | | | | | | |
| | | **SPLITTERS-CENTRAL OFFICE BASED** | | | | | | | | | | | | | | | |
| | | Line Sharing Splitter, per System 96 Line Capacity | | | ULS | ULSDA | 119.72 | 379.13 | 0.00 | 347.90 | 0.00 | | | | | | |
| | | Line Sharing Splitter, per System 24 Line Capacity | | | ULS | ULSDB | 29.93 | 379.13 | 0.00 | 347.90 | 0.00 | | | | | | |
| | | Line Sharing Splitter, Per System, 8 Line Capacity | | | ULS | ULSD8 | 8.33 | 379.13 | 0.00 | 347.90 | 0.00 | | | | | | |
| | | Line Sharing-DLEC Owned Splitter in CO-CFA activaton-deactivation (per LSOD) | | | ULS | ULSDG | | 173.66 | 0.00 | 97.42 | 0.00 | | | | | | |
| | | **END USER ORDERING-CENTRAL OFFICE BASED LINE SHARING** | | | | | | | | | | | | | | | |
| | | Line Sharing - per Line Activation (BST Owned splitter) - OBSOLETE see **NOTE 2 | | | ULS | ULSDC | 0.61 | 29.68 | 21.28 | 19.57 | 9.61 | | | | | | |
| | | Line Share Service, TRO per line activation, BST owned splitter - Central Office Located (75% of UCLND) - please see NOTE 1 (E:10/2/2005) | | | ULS | ULSDT | 5.77 | 29.68 | 21.28 | 19.57 | 9.61 | | | | | | |
| | | Line Sharing - per Subsequent Activity per Line Rearrangement - (BST Owned Splitter) | | | ULS | ULSDS | | 21.68 | 16.44 | | | | | | | | |
| | | Line Sharing - per Subsequent Activity per Line Rearrangement - (DLEC Owned Splitter) | | | ULS | ULSCS | | 21.68 | 16.44 | | | | | | | | |
| | | Line Sharing - per Line Activation (DLEC owned Splitter) - OBSOLETE see **NOTE 2 | | | ULS | ULSCC | 0.61 | 47.44 | 19.31 | 20.67 | 12.74 | | | | | | |
| | | Line Share Service, TRO per line activation, CLEC owned splitter - Central Office Located (75% of UCLND) - please see NOTE 1 (E:10/2/2005) | | | ULS | ULSCT | 5.77 | 47.44 | 19.31 | 20.67 | 12.74 | | | | | | |
| | | **MAINTENANCE** | | | | | | | | | | | | | | | |
| | | No Trouble Found - per 1/2 hour increments - Basic | | | | | | 80.00 | 55.00 | | | | | | | | |
| | | No Trouble Found - per 1/2 hour increments - Overtime | | | | | | 120.00 | 82.50 | | | | | | | | |
| | | No Trouble Found - per 1/2 hour increments - Premium | | | | | | 160.00 | 110.00 | | | | | | | | |

**Amendment to the Agreement**
**Between**
**Level 3 Communications, L.L.C.**
**and**
**BellSouth Telecommunications, Inc.**
**Dated June 23, 2004**

Pursuant to this Amendment, (the "Amendment"), Level 3 Communications, L.L.C. (Level 3, and BellSouth Telecommunications, Inc. (BellSouth), hereinafter referred to collectively as the "Parties", hereby agree to amend that certain Interconnection Agreement between the Parties dated June 23, 2004 (Agreement).

WHEREAS, on April 20, 2006, the Alabama Public Service Commission (Commission) issued its Order in Docket No. 29543 (Order), Petition Regarding the Establishment of a Generic Proceeding on Change of Law and Nondiscriminatory Pricing for UNEs; and

WHEREAS, the Parties are obligated to amend the Agreement to bring it in compliance with the Commission's Order;

NOW, THEREFORE, in consideration of the mutual provisions contained herein and other good and valuable consideration, the receipt and sufficiency of which are hereby acknowledged, the Parties hereby covenant and agree as follows:

1. The Parties hereby agree to incorporate into the Agreement the contract provisions set forth in Exhibit A hereto, and such contract provisions shall apply to services provided in the State of Alabama only.

2. The Parties hereby agree to incorporate into the Agreement the rates set forth in Exhibit B hereto, and such rates shall apply to services provided in the State of Alabama only.

3. To the extent that such contract provisions or rates as set forth in Exhibits A and B hereto conflict with any other rates, terms and conditions in the Agreement, the contract provisions and rates in Exhibits A and B shall prevail in the State of Alabama.

4. Further, to the extent that defined terms in this Amendment differ from defined terms in the Agreement, such defined terms in the Agreement shall be deemed to have the same meaning as the alternative defined terms in this Amendment to the extent necessary to give full effect to this Amendment consistent with the Alabama Public Service Commission's Orders.

5. This Amendment shall be shall be deemed effective on March 11, 2006 (Effective Date).

6. All of the other provisions of the Agreement shall remain in full force and effect.

7. Either or both of the Parties are authorized to submit this Amendment to the Alabama Public Service Commission for approval subject to Section 252(e) of the Federal Telecommunications Act of 1996.

IN WITNESS WHEREOF, the Parties have executed this Amendment the day and year written below.

"**Effective on 3/11/06 pursuant to the APSC's Final Order Resolving Disputed Issues in Docket 29543**"

| **BellSouth Telecommunications, Inc.** | **Level 3 Communications, L.L.C.** |
|---|---|
| By: | By: |
| Name: Kristen E. Shore | Name: |
| Title: Director | Title: |
| Date: | Date: |

**Issue 1 – What is the appropriate language to implement the FCC's transition plan for: (1) switching; (2) high-capacity loops; and (3) dedicated transport as detailed in the FCC's TRRO, issued February 4, 2005?**

1. Transition for DS1 and DS3 Loops

1.1 For purposes of this Section 1, the Transition Period for the Embedded Base of DS1 and DS3 Loops and for the Excess DS1 and DS3 Loops is the twelve (12) month period beginning March 11, 2005 and ending March 10, 2006.

1.2 For purposes of this Section 1, Embedded Base means DS1 and DS3 Loops that were in service for Level 3 as of March 11, 2005, (and/or were added during the Transition Period as permitted by Commission order) in those wire centers that, as of such date (or thereafter as applicable), met the criteria set forth in Section 1.4.1 and 1.4.2. The Embedded Base shall not include subsequent disconnects and/or lost End Users.

1.3 Excess DS1 and DS3 Loops are those Level 3 DS1 and DS3 Loops in service as of March 11, 2005, (or added during the Transition Period) pursuant to Commission Order in excess of the caps set forth in Sections 1.3.1 and 1.3.2 below, respectively. Subsequent disconnects and/or loss of End Users shall be removed from the calculation of Excess DS1 and DS3 Loops.

1.3.1 Level 3 may obtain a maximum of ten (10) unbundled DS1 Loops to any single building in which such Loops are still subject to unbundling requirements.

1.3.2 Level 3 may obtain a maximum of one (1) Unbundled DS3 Loop to any single building in which such Loops are still subject to unbundling requirements.

1.4 Level 3 may obtain access to the following:

1.4.1 Unbundled DS1 Loops to any Building not served by a wire center with at least 60,000 Business Lines and four (4) or more fiber-based collocators.

1.4.2 Unbundled DS3 Loops to any Building not served by a wire center with at least 38,000 Business Lines and four (4) or more fiber-based collocators.

1.5 The Initial Non-Impaired Wire Center List adopted by the Commission setting forth the wire centers meeting the criteria set forth in Sections 1.4.1 and 1.4.2 above, is available on BellSouth's Interconnection Web site.

1.6 Transition Period Pricing. From March 11, 2005, through the expiration of the Transition Period, BellSouth shall charge/collect a rate for Level 3's Embedded Base and Level 3's Excess DS1 and DS3 Loops equal to the higher of:

1.6.1 115% of the rate paid for that element on June 15, 2004; or

1.6.2 115% of any new rate the Commission establishes between June 16, 2004 and March 11, 2005.

1.6.3 These rates shall be as set forth in Exhibit A to Attachment 2 of the Agreement and this Section 1.6.

1.7 If Level 3 fails to submit the spreadsheet(s) for its Embedded Base and Excess DS1 and DS3 Loops on or before March 10, 2006, BellSouth will identify and transition such circuits to the equivalent wholesale services provided by BellSouth. Those circuits identified and transitioned by BellSouth pursuant to this Section shall be subject to the Commission-established switch-as-is charge of $5.59. Full nonrecurring and installation charges shall apply where physical changes to circuits are necessary.

1.8 For Embedded Base circuits and Excess DS1 and DS3 Loops converted, the applicable recurring tariff charge shall apply to each circuit as of March 11, 2006. The transition of the Embedded Base and Excess DS1 and DS3 Loops should be performed in a manner that avoids, or otherwise minimizes to the extent possible, disruption or degradation to Level 3's customers' service.

2. Dark Fiber Loop

2.1 Dark Fiber Loop is an unused optical transmission facility, without attached signal regeneration, multiplexing, aggregation or other electronics, from the demarcation point at an End User's premises to the End User's serving wire center. Dark Fiber Loops may be strands of optical fiber existing in aerial or underground structure. BellSouth will not provide line terminating elements, regeneration or other electronics necessary for Level 3 to utilize Dark Fiber Loops.

2.2 Transition for Dark Fiber Loop

2.2.1 For purposes of this Section 2.2, the Transition Period for Dark Fiber Loops is the eighteen (18) month period beginning March 11, 2005 and ending September 10, 2006.

2.2.2 For purposes of this Section 2.2, Embedded Base means Dark Fiber Loops that were in service for Level 3 as of March 11, 2005 and/or added during the Transition Period as pursuant to Commission Order. Subsequent disconnects and/or loss of End Users shall be removed from the Embedded Base.

2.2.3 During the Transition Period only, BellSouth shall make available for the Embedded Base Dark Fiber Loops for Level 3 at the terms and conditions set forth in this Attachment.

2.2.4 Transition Period Pricing. From March 11, 2005, through the completion of the Transition Period, BellSouth shall charge a rate for Level 3's Embedded Base of Dark Fiber Loops equal to the higher of:

2.2.4.1 115% of the rate paid for that element on June 15, 2004; or

2.2.4.2 115% of a new rate the Commission establishes, if any, between June 16, 2004 and March 11, 2005.

2.2.4.3 These rates shall be as set forth in Exhibit A to Attachment 2 of the Agreement and this Section 2.2.4.

2.2.4.4 The Transition Period shall apply only to Level 3's Embedded Base and Level 3 shall not add new Dark Fiber Loops pursuant to this Agreement.

2.2.5 Effective September 11, 2006, Dark Fiber Loops will no longer be made available pursuant to this Agreement.

2.2.6 Level 3 shall strive to provide spreadsheets to BellSouth no later than September 10, 2006, identifying the specific Dark Fiber Loops, to be either disconnected or converted to other BellSouth services. Level 3 may transition from Dark Fiber Loops to other available wholesale facilities provided by BellSouth, including special access, wholesale facilities obtained from other carriers, or self-provisioned facilities. For Conversions as defined in Section 15, such spreadsheets shall take the place of an LSR or ASR. The Parties shall negotiate a project schedule for the Conversion of the Embedded Base Dark Fiber Loops. If Level 3 chooses to convert the Dark Fiber UNE Loops to special access circuits, BellSouth will include such Dark Fiber Loops once converted within Level 3's total special access circuits and apply any discounts to which Level 3 is entitled.

2.2.6.1 If Level 3 submits the spreadsheets specified in Section 2.2.6 above for all of its Embedded Base on or before September 10, 2006, Conversions shall be subject to Commission-approved switch-as-is charges and no disconnect charges.

2.2.6.2 If Level 3 fails to submit the spreadsheet(s) specified in Section 2.2.6 above for all of its Embedded Base on or before September 10, 2006, BellSouth will identify Level 3's remaining Embedded Base, if any, and will transition such circuits to the equivalent tariffed BellSouth service(s). Those circuits identified and transitioned by BellSouth pursuant to this Section 2.2.6.2 shall be subject to the Commission-established switch-as-is charge of $5.59.

2.2.6.3 For Embedded Base circuits converted or transitioned, the applicable recurring tariff charge shall apply to each circuit as of September 11, 2006. The transition of the Embedded Base circuits should be performed in a manner that avoids, or otherwise minimizes to the extent possible, disruption or degradation to Level 3's customers' service.

3. Local Switching

3.1 Notwithstanding anything to the contrary in this Agreement, the services offered pursuant to this Section 3 are limited to DS0 level Local Switching and BellSouth is not required to provide Local Switching pursuant to this Agreement except as set forth in Section 3.2 below.

3.2 Transition for Local Switching

3.2.1 For purposes of this Section 3, the Transition Period for the Embedded Base of Local Switching is the twelve (12) month period beginning March 11, 2005 and ending March 10, 2006.

3.2.2 For the purposes of this Section 3.2, Embedded Base shall mean Local Switching and any additional elements that are required to be provided in conjunction therewith that were in service for Level 3 as of March 11, 2005 and/or were added during the Transition Period as permitted by Commission order. Subsequent disconnects and/or loss of End Users shall be removed from the Embedded Base.

3.2.3 Transition Period Pricing. From March 11, 2005, through the completion of the Transition Period, BellSouth shall charge/collect a rate for Level 3's Embedded Base of Local Switching equal to the higher of:

3.2.3.1 The rate at which during Level 3 leased that combination of elements on June 15, 2004, plus one dollar; or

3.2.3.2 Any rate the Commission established, if any, between June 16, 2004, and the effective date of the TRRO, plus one dollar.

3.2.3.4 These rates shall be as set forth in Exhibit A to Attachment 2 of the Parties Agreement and this Section 3.2.3.

3.2.4 If Level 3 failed to submit orders to disconnect or convert all of its Embedded Base of Local Switching on or before March 10, 2006, BellSouth will identify Level 3's remaining Embedded Base of Local Switching and will disconnect such Local Switching circuits. Those circuits identified and disconnected by BellSouth shall be subject to the Commission-established switch-as-is charge of $5.59. Full nonrecurring and installation charges shall apply where physical changes to circuits are necessary.

3.3 As of March 11, 2006, Local Switching was no longer required to be made available pursuant to this Agreement.

3.4 The transition of the Embedded Base should be performed in a manner that avoids, or otherwise minimizes to the extent possible, disruption or degradation to Level 3's customers' service.

3.5 Notwithstanding any other provision of this Agreement, BellSouth will only provide unbundled access to Common (Shared) Transport to the extent BellSouth is required to provide and is providing Local Switching to Level 3.

4. UNE-P

4.1 UNE-P is DS0 Local Switching, in combination with a Loop and Common (Shared) Transport used to provide local exchange service for the origination or termination of calls. UNE-P supports the same local calling and feature requirements as described in the Local Switching section of this Attachment and the ability to presubscribe to a primary carrier for intraLATA toll service and/or to presubscribe to a primary carrier for interLATA toll service.

4.2 Notwithstanding anything to the contrary in this Agreement, BellSouth is not required to provide UNE-P pursuant to this Agreement except as set forth in this Section.

4.3 Transition Period for UNE-P

4.3.1 For purposes of this Section 4, the Transition Period for UNE-P is the twelve (12) month period beginning March 11, 2005 and ending March 10, 2006.

4.3.2 For purposes of this Section 4.3, Embedded Base shall mean UNE-P and any additional elements that are required to be provided in conjunction with UNE-P (signaling networks, call-related databases, and shared transport), as such elements are defined at 47 C.F.R. §51.319(d)(4)(i), that were in service for Level 3 as of March 11, 2005 and/or added during the Transition Period pursuant to Commission order. Subsequent disconnects and/or loss of End Users shall be removed from the Embedded Base.

4.3.3 Transition Period Pricing. From March 11, 2005, through the completion of the Transition Period, BellSouth shall charge/collect a rate for Level 3's Embedded Base of Local Switching equal to the higher of:

4.3.3.1 The rate at which during Level 3 leased that combination of elements on June 15, 2004, plus one dollar; or

4.3.3.2 The rate the Commission established, if any, between June 16, 2004, and the effective date of the TRRO, plus one dollar.

4.3.3.3 These rates shall be as set forth in Exhibit A to Attachment 2 of the Parties Agreement and this Section 4.3.3.

4.3.4 If Level 3 failed to submit orders or spreadsheets converting all of the Embedded Base of UNE-P on or before March 10, 2006, BellSouth will identify Level 3's remaining Embedded Base of UNE-P and will transition such UNE-P to resold BellSouth telecommunication services, as set forth in Attachment 1 to the Agreement. Those circuits identified and transitioned by BellSouth shall be subject to the

Commission-established switch-as-is charge of $5.59. Full nonrecurring and installation charges shall apply where physical changes to circuits are necessary.

4.3.5 For Embedded Base UNE-P converted or transitioned, the applicable recurring tariff charges shall apply as of March 11, 2006. The transition of the Embedded Base should be performed in a manner that avoids, or otherwise, minimizes to the extent possible, disruption or degradation to Level 3's customers' service.

4.3.6 As of March 11, 2006, UNE-P was no longer required to be made available pursuant to this Agreement.

4.3.7 BellSouth shall make 911 updates in the BellSouth 911 database for Level 3's UNE-P. BellSouth will not bill Level 3 for 911 surcharges. Level 3 is responsible for paying all 911 surcharges to the applicable governmental agency.

5. Dedicated Transport and Dark Fiber Transport

5.1 Dedicated Transport. Dedicated Transport is defined as BellSouth's transmission facilities between wire centers or switches owned by BellSouth, or between wire centers or switches owned by BellSouth and switches owned by Level 3, including but not limited to DS1, DS3 and OCn level services, as well as dark fiber, dedicated to Level 3. BellSouth shall not be required to provide access to OCn level Dedicated Transport under any circumstances pursuant to this Agreement. In addition, except as set forth in Section 5.2 below, BellSouth shall not be required to provide to Level 3 unbundled access to interoffice transmission facilities that do not connect a pair of wire centers or switches owned by BellSouth ("Entrance Facilities").

5.2 Transition for DS1 and DS3 Dedicated Transport Including DS1 and DS3 Entrance Facilities

5.2.1 For purposes of this Section 5.2, the Transition Period for the Embedded Base of DS1 and DS3 Dedicated Transport, Embedded Base Entrance Facilities and for Excess DS1 and DS3 Dedicated Transport, is the twelve (12) month period beginning March 11, 2005 and ending March 10, 2006.

5.2.2 For purposes of this Section 5.2, Embedded Base means DS1 and DS3 Dedicated Transport that were in service for Level 3 as of March 11, 2005 and/or added during the Transition Period pursuant to Commission order in those wire centers that, as of such date, met the criteria set forth in Sections 5.2.5.1 or 5.2.5.2 below. Subsequent disconnects and/or loss of End Users shall be removed from the Embedded Base.

5.2.3 For purposes of this Section 5.2, Embedded Base Entrance Facilities means Entrance Facilities that were in service for Level 3 as of March 11, 2005 and/or added during the Transition Period pursuant to Commission order. Subsequent disconnects and/or loss of customers shall be removed from the Embedded Base.

5.2.4 For purposes of this Section 5.2, Excess DS1 and DS3 Dedicated Transport means those Level 3 DS1 and DS3 Dedicated Transport facilities in service as of March 11, 2005 and/or added during the Transition Period pursuant to Commission order, in excess of the caps set forth in Section 5.2.5.3. Subsequent disconnects and/or loss of End Users shall be removed from Excess DS1 and DS3 Loops.

5.2.5 Level 3 may obtain access to the following:

5.2.5.1 DS1 Transport except on routes connecting a pair of wire centers, where both wire centers contain at least four (4) fiber-based collocators or at least 38,000 Business access lines.

5.2.5.2 DS3 Transport except on routes connecting a pair of wire centers, each of which contains at least three (3) fiber-based collocators or at least 24,000 Business access lines.

5.2.5.3 Level 3 may obtain a maximum of twelve (12) unbundled DS3 Dedicated Transport circuits on each route where DS3 Dedicated Transport is available as a Network Element, and a maximum of ten (10) unbundled DS1 Dedicated Transport circuits on each Route where there is no 251(c)(3) unbundling obligation for DS3 Dedicated Transport but for which impairment exists for DS1 Dedicated Transport.

5.2.6 The Initial Non-Impaired Wire Center List adopted by the Commission setting forth the wire centers meeting the criteria set forth in Sections 5.2.5.1 and 5.2.5.2 above, is available on BellSouth's Interconnection Web site.

5.2.7 Transition Period Pricing. From March 11, 2005, through the completion of the Transition Period, BellSouth shall charge/collect a rate for Level 3's Embedded Base of DS1 and DS3 Dedicated Transport and for Level 3's Excess DS1 and DS3 Dedicated Transport, as described in this Section 5.2, equal to the higher of:

5.2.7.1 115% of the rate paid for that element on June 15, 2004; or

5.2.7.2 115% of a new rate the Commission establishes, if any, between June 16, 2004 and March 11, 2005.

5.2.7.3 These rates shall be as set forth in Exhibit A to Attachment 2 of the Agreement and this Section 5.2.7.

5.2.7.4 From March 11, 2005, through the completion of the Transition Period, BellSouth shall charge/collect a rate for Level 3's Embedded Base Entrance Facilities as set forth in Exhibit A to Attachment 2 of the Agreement and this Section 5.2.7.

5.2.8 If Level 3 failed to submit the spreadsheet(s) identifying its Embedded Base circuits, Embedded Base Entrance Facilities and Excess DS1 and DS3 Dedicated Transport on or before March 10, 2006, BellSouth will identify Level 3's remaining Embedded Base circuits, Embedded Base Entrance Facilities and Excess DS1 and DS3

Dedicated Transport, if any, and will transition such circuits to the equivalent tariffed BellSouth service(s). Those circuits identified and transitioned by BellSouth shall be subject to the Commission-established switch-as-is charge of $5.59. Full nonrecurring and installation charges shall apply where physical changes to circuits are necessary.

5.2.9 For Embedded Base circuits, Embedded Base Entrance Facilities and Excess DS1 and DS3 Dedicated Transport converted or transitioned, the applicable recurring tariff charge shall apply to each circuit as of March 11, 2006. The transition of the Embedded Base, Embedded Base Entrance Facilities and Excess DS1 and DS3 Dedicated Transport should be performed in a manner that avoids, or otherwise, minimizes to the extent possible, disruption or degradation to Level 3's customers' service.

5.3 Dark Fiber Transport. Dark Fiber Transport is defined as Dedicated Transport that consists of unactivated optical interoffice transmission facilities without attached signal regeneration, multiplexing, aggregation or other electronics. Except as set forth in Section 5.3.1 below, BellSouth shall not be required to provide access to Dark Fiber Transport Entrance Facilities pursuant to this Agreement.

5.3.1 Transition for Dark Fiber Transport and Dark Fiber Transport Entrance Facilities

5.3.2 For purposes of this Section 5.3, the Transition Period for the Embedded Base Dark Fiber Transport and Embedded Base Dark Fiber Entrance Facilities is the eighteen (18) month period beginning March 11, 2005 and ending September 10, 2006.

5.3.3 For purposes of this Section 5.3, Embedded Base means Dark Fiber Transport that was in service for Level 3 as of March 11, 2005 and/or added during the Transition Period pursuant to Commission order in those wire centers that, as of such date, met the criteria set forth in 5.3.5 below. Subsequent disconnects and/or loss of End Users shall be removed from the Embedded Base.

5.3.4 For purposes of this Section 5.3, Embedded Base Dark Fiber Entrance Facilities means Fiber Entrance Facilities that were in service for Level 3 as of March 11, 2005 and/or added during the Transition Period pursuant to Commission order in those wire centers that, as of such date, met the criteria set forth in 5.3.5 below. Subsequent disconnects and/or loss of End Users shall be removed from the Embedded Base.

5.3.5 Level 3 may obtain access to the following:

5.3.5.1 Dark Fiber Transport except on routes connecting a pair of wire centers, each of which contains at least three (3) fiber-based collocators or 24,000 Business access lines.

5.3.6 The Initial Non-Impaired Wire Center List adopted by the Commission setting forth the wire centers meeting the criteria set forth in Section 5.3.5 above, is available on BellSouth's Interconnection Web site.

5.3.7 Transition Period Pricing. From March 11, 2005, through the completion of the Transition Period, BellSouth shall charge/collect a rate for Level 3's Embedded Base and Embedded Base Dark Fiber Entrance Facilities equal to the higher of:

5.3.7.1 115% of the rate paid for that element on June 15, 2004; or

5.3.7.2 115% of a new rate the Commission establishes, if any, between June 16, 2004 and March 11, 2005.

5.3.7.3 These rates shall be as set forth in Exhibit A Attachment 2 of the Agreement and this Section 5.3.7.

5.3.7.4 From March 11, 2005, through the completion of the Transition Period, BellSouth shall charge/collect a rate for Level 3's Embedded Base Entrance Facilities as set forth in this Section 5.3.7.

5.3.8 No later than September 10, 2006 Level 3 shall strive to submit spreadsheet(s) identifying all of the Embedded Base of Dark Fiber Transport and Dark Fiber Entrance Facilities to be either disconnected or converted to other BellSouth services as Conversions pursuant to Section 15. Level 3 may transition from these Dark Fiber Transport and Dark Fiber Entrance Facilities to other available wholesale arrangements provided by BellSouth, wholesale facilities obtained from other carriers, or self-provisioned facilities. For Conversions as defined in Section 15, such spreadsheet shall take the place of an LSR or ASR. If a Level 3 chooses to convert the Dark Fiber UNE Transport circuits and Dark Fiber Entrance Facilities to special access circuits, BellSouth will include such Dark Fiber UNE Transport circuits and Dark Fiber UNE Entrance Facilities once converted within Level 3's total special access circuits and apply any discounts to which Level 3 is entitled. The Parties shall negotiate a project schedule for the Conversion of the Embedded Base of Dark Fiber Transport and Dark Fiber Entrance Facilities.

5.3.9 If Level 3 submits the spreadsheets specified in Section 5.3.8 for all of its Embedded Base of Dark Fiber Transport and Dark Fiber Entrance Facilities on or before September 10, 2006, Conversions shall be subject to Commission-approved switch-as-is charges.

5.3.10 If Level 3 fails to submit the spreadsheet(s) for all of its Embedded Base of Dark Fiber Transport and Dark Fiber Entrance Facilities prior to September 10, 2006, BellSouth will identify Level 3's remaining Embedded Base of Dark Fiber Transport and Dark Fiber Entrance Facilities, if any, and will transition such circuits to the equivalent tariffed BellSouth service(s) subject to the Commission-approved switch-

as-is charge of $5.59. Full nonrecurring and installation charges shall apply where physical changes to circuits are necessary.

5.3.11 For Embedded Base Dark Fiber Transport and Embedded Base Dark Fiber Entrance Facilities converted or transitioned, the applicable recurring tariff charge shall apply to each circuit as of September 11, 2006. The transition of the Embedded Base Dark Fiber Transport and Embedded Base Dark Fiber Entrance Facilities should be performed in a manner that avoids, or otherwise, minimizes to the extent possible, disruption or degradation to Level 3's customers' service.

**Issue 4 –What is the appropriate language to implement BellSouth's obligation to provide Section 251 unbundled access to high-capacity loops and dedicated transport and how should the following terms be defined? (i) Business Line; (ii) Fiber-Based Collocator; (iii) Building (iv) route; (v) Is a CLEC entitled to obtain DS3 transport from a Tier 3 wire center to each of two or more Tier 1 or Tier 2 wire centers? (vi) is a CLEC entitled to obtain dark fiber transport from a Tier 3 wire center to each of two or more Tier 1 or Tier 2 wire centers?**

6. (i) Business Line

6. 1 For purposes of this Attachment 2, a "Business Line" is, as defined in 47 C.F.R. § 51.5, a BellSouth-owned switched access line used to serve a business customer, whether by BellSouth itself or by a CLEC that leases the line from BellSouth. The number of business lines in a wire center shall equal the sum of all BellSouth business switched access lines, plus the sum of all UNE loops connected to that wire center, including UNE loops provisioned in combination with other unbundled elements. Among these requirements, business line tallies (1) shall include only those access lines connecting end-user customers with BellSouth end-offices for switched services, (2) shall not include non-switched special access lines, (3) shall account for ISDN and other digital access lines by counting each 64 kbps-equivalent as one line. For example, a DS1 line corresponds to 24 64 kbps-equivalents, and therefore to 24 "business lines."

6.2 (ii) Fiber-Based Collocation

6.2.1 For purposes of this Attachment 2 a "Fiber-Based Collocator" is, as defined in 47 C.F.R. § 51.5, any carrier, unaffiliated with BellSouth, that maintains a collocation arrangement in a BellSouth wire center, with active electrical power supply, and operates a fiber-optic cable or comparable transmission facility that (1) terminates at a collocation arrangement within the wire center; (2) leaves the BellSouth wire center premises; and (3) is owned by a party other than BellSouth or any affiliate of BellSouth, except as set forth in this paragraph. Dark fiber obtained from an incumbent LEC on an indefeasible right of use basis shall be treated as non-incumbent LEC fiber-optic cable. Two or more affiliated fiber-based collocators in a single wire center shall collectively be counted as a single fiber-based collocator. For purposes of this paragraph, the term affiliate is defined by 47 U.S.C. § 153(1) and any relevant interpretation in this Title.

6.3 (iii) Building

6.3.1. For purposes of this Attachment 2, a "Building" is a permanent physical structure including, but not limited to, a structure in which people reside, or conduct business or work on a daily basis and through which there is one centralized point of entry in the structure through which all telecommunications services must transit. As an example only, a high rise office building with a general telecommunications equipment room through which all telecommunications services to that building's tenants must pass would be a single "building" for purposes of this Attachment. Two or more physical areas served by individual points of entry through which telecommunications services must transit will be considered separate buildings. For instance, a strip mall with individual businesses obtaining telecommunication services from different access points on the building(s) will be considered individual buildings, even though they might share common walls.

6.4 (iv) Route

6.4.1 For purposes of this Attachment 2, a "Route" is, as defined in 47 C.F.R. §. 51.319(e), a transmission path between one of an incumbent LEC's wire centers or switches and another of the incumbent LEC's wire centers or switches. A route between two points (e.g. wire center or switch "A" and wire center or switch "Z") may pass through one or more intermediate wire centers or switches (e.g., wire center or switch "X"). Transmission paths between identical end points (e.g., wire center or switch "A" and wire center or switch "Z" ) are the same "route," irrespective of whether they pass through the same intermediate wire centers or switches, if any.

7. In the event that (1) BellSouth designates a wire center as non-impaired, (2) Level 3 converts existing UNEs to other services or orders new services as services other than UNEs, (3) Level 3 otherwise would have been entitled to UNEs in such wire center at the time alternative services provisioned, and (4) BellSouth acknowledges or a state or federal agency regulatory body with authority determines that, at the time BellSouth designated such wire center as non-impaired, such wire center did not meet the FCC's non-impairment criteria, then upon request of Level 3, BellSouth shall transition to UNEs any alternative services in such wire center that were established after such wire center was designated as non-impaired. In such instances, BellSouth shall refund Level 3 the difference between the rate paid by Level 3 for such services and the applicable UNE rate, including but not limited to any charges associated with the unnecessary conversion from UNE to other wholesale services.

**Issue 6 – Are HDSL-capable copper loops the equivalent of DS1 loops for the purpose of evaluating impairment?**

8. 2-wire or 4-wire HDSL-Compatible Loop. This is a designed Loop which meets Carrier Serving Area (CSA) specifications, may be up to 12,000 feet long and may

have up to 2,500 feet of bridged tap (inclusive of Loop length). It may be a 2-wire or 4-wire circuit and will come standard with a test point, OC, and a DLR.

9. 4-wire Unbundled DS1 Digital Loop. This is a designed 4-wire Loop that is provisioned according to industry standards for DS1 or Primary Rate ISDN services and will come standard with a test point, OC, and a DLR. A DS1 Loop may be provisioned over a variety of loop transmission technologies including copper, HDSL-based technology or fiber optic transport systems. It will include a 4-wire DS1 Network Interface at the End User's location. For purposes of this Agreement, including the transition of DS1 and DS3 Loops described in Section 1 above, DS1 Loops include 2-wire and 4-wire HDSL-Compatible Loops.

**Issue 10 – Transition of De-listed Network Elements To Which No Specified Transition Period Applies. What rates terms and conditions should govern the transition of existing network elements that BellSouth is no longer obligated to provide as Section 251 UNEs to non-Section 251 network elements and other services and (a) what is the proper treatment for such network elements at the end of the transition period,; and (b) what is the appropriate transition period, and what are the appropriate rates, terms and conditions during such transition period, for unbundled high-capacity loops, high capacity transport, and dark fiber transport in and between wire centers that do not meet the FCC's non-impairment standards at this time, but that meet such standards in the future?**

10. Except to the extent expressly provided otherwise in this Attachment, Level 3 may not maintain unbundled network elements or combinations of unbundled network elements, that are no longer offered pursuant to this Amendment (collectively "Arrangements"). In the event BellSouth determines that Level 3 has in place any Arrangements after the Effective Date of this Amendment, BellSouth will provide Level 3 with written notice that such Arrangements must be converted or disconnected within thirty (30) days of the receipt of such notice. The written notice provided by BellSouth must identify, by circuit identification number(s), the specific Arrangement(s) which BellSouth insists must be converted or disconnected. Those circuits identified by Level 3 within such thirty (30) day period shall be converted subject to Commission-approved switch-as-is rates with no UNE disconnect charges. If Level 3 fails to dispute BellSouth's claims or fails to submit orders to disconnect or convert such Arrangements within the established thirty (30)-day period, BellSouth will transition such circuits to the equivalent tariffed BellSouth service(s) subject to the Commission-established switch-as-is rate. The full nonrecurring charges for installation of the equivalent tariffed BellSouth service as set forth in BellSouth's tariffs will not apply to such conversions. However, the applicable recurring tariff charges shall apply to each circuit upon conversion.

**Issue 5 – a) Does the Commission have the authority to determine whether or not BellSouth's application of the FCC's Section 251 non-impairment criteria for high-capacity loops and transport is appropriate?**

**b) What procedures should be used to identify those wire centers that satisfy the FCC's Section 251 non-impairment criteria for high-capacity loops and transport?**
**c) What language should be included in agreements to reflect the procedures identified in (b)?**

11. Modifications and Updates to the Wire Center List and Subsequent Transition Periods

11.1 DS1 or DS3 loops, or Dedicated Transport in Wire Centers that Meet the TRRO Non-Impaired Criteria in the Future

11.2 In the event BellSouth identifies additional wire centers that meet the criteria set forth in Sections 1.4.1 (DS1 loops), 1.4.2 (DS3 loops), 5.2.5.1 (DS1 transport) and 5.2.5.2 (DS3 transport) but that were not included in the Initial Non-Impaired Wire Center List adopted by the Commission, BellSouth shall include such additional wire centers in a carrier notification letter (CNL). Each such list of additional wire centers shall be considered a "Subsequent Wire Center List."

11.3 Effective thirty (30) calendar days after the date of a BellSouth CNL providing a Subsequent Wire Center List, BellSouth shall not be required to unbundle new DS1 or DS3 Loops, or transport, as applicable, in such additional wire center(s), except pursuant to self-certification by Level 3. BellSouth may review the self-certification claim of Level 3 and seek dispute resolution through the Commission if needed. During the dispute resolution period, the applicable DS1 or DS3 loop rate will not change unless ordered by the Commission. Upon the Commission's resolution of the dispute, said rates will be trued up if necessary, to the time BellSouth provisioned in the order in question.

11.4 BellSouth shall make available de-listed DS1 and DS3 Loops and transport that were in service for Level 3 in a de-listed wire center on the Subsequent Wire Center List as of the thirtieth ($30^{th}$) calendar day after the date of BellSouth's CNL identifying the Subsequent Wire Center List (Subsequent Embedded Base) until one hundred and eighty (180) calendar days after the thirtieth (30th) calendar day from the date of BellSouth's CNL identifying the Subsequent Wire Center List (Subsequent Transition Period).

11.5 Subsequent disconnects and/or lost End Users shall be removed from the Subsequent Embedded Base.

11.6 The rate that shall apply to the Subsequent Embedded Base throughout the entire Subsequent Transition Period shall be the rate paid for that element at the time of the CNL posting, plus 15%.

11.7 No later than one hundred and eighty (180) calendar days from BellSouth's CNL identifying the Subsequent Wire Center List, Level 3 shall submit a spreadsheet(s) identifying the Subsequent Embedded Base of circuits to be disconnected or converted to other BellSouth services. For Conversions as defined in Section 15, such spreadsheets shall take the place of an LSR or ASR. The Parties shall negotiate a project schedule for the Conversion of the Subsequent Embedded Base of circuits. If a Level 3 chooses to convert the de-listed DS1 and DS3 Loops and Transport to special access circuits, BellSouth will include such de-listed DS1 and DS3 Loops and Transport once converted within Level 3's total special access circuits and apply any discounts to which Level 3 is entitled. The Parties shall negotiate a project schedule for the Conversion of the Subsequent Embedded Base.

11.7.1 If Level 3 submits the spreadsheet(s) for its Subsequent Embedded Base by one hundred and eighty (180) calendar days from BellSouth's CNL identifying the Subsequent Wire Center List, those identified circuits shall be subject to the Commission-approved switch-as-is conversion nonrecurring charge.

11.7.2 If Level 3 fails to submit the spreadsheet(s) for all of its Subsequent Embedded Base by one hundred and eighty (180) calendar days after the date of BellSouth's CNL identifying the Subsequent Wire Center List, BellSouth will identify Level 3's remaining Subsequent Embedded Base, if any, and will transition such circuits to the equivalent tariffed BellSouth service(s) subject to the switch-as-is rate established by the Commission.

11.7.3 For Subsequent Embedded Base circuits converted or transitioned, the applicable recurring tariff charges shall apply on the first day after the end of the Subsequent Transition Period. The transition of the Subsequent Embedded Base circuits should be performed in a manner that avoids, or otherwise minimizes to the extent possible, disruption or degradation to Level 3's customers' service.

11.8 Dark Fiber Transport in Wire Centers that Meet the TRRO Non-Impaired Criteria in the Future

11.8.1 In the event BellSouth identifies additional wire centers that meet the criteria set forth in Section 5.3.5 above, but that were not included in the Initial Non-Impaired Wire Center List adopted by the Commission, BellSouth shall include such additional wire centers in a CNL. Each such list of additional wire centers shall be considered a "Subsequent Wire Center List."

11.8.2 Effective thirty (30) calendar days after the date of a BellSouth CNL providing a Subsequent Wire Center List, BellSouth shall not be required to unbundle new Dark Fiber Transport, as applicable, in such additional wire center(s), except pursuant to the self-certification process by Level 3. BellSouth may review the self-certification claim of Level 3 and seek dispute resolution through the Commission if needed. During the dispute resolution period, the applicable DS1 or DS3 loop rate will not change unless ordered by the Commission. Upon the Commission's resolution of the

dispute, said rates will be trued up if necessary, to the time BellSouth provisioned in the order in question.

11.8.3 For purposes of Section 11.8, BellSouth shall make available dark fiber transport that was in service for Level 3 in a wire center on the Subsequent Wire Center List as of the thirtieth ($30^{th}$) calendar day after the date of BellSouth's CNL identifying the Subsequent Wire Center List (Subsequent Embedded Base) until two hundred and seventy (270) calendar days after the thirtieth (30th) calendar day from the date of BellSouth's CNL identifying the Subsequent Wire Center List (Subsequent Transition Period).

11.8.4 Subsequent disconnects and/or lost End Users shall be removed from the Subsequent Embedded Base.

11.8.5 The rate that shall apply to the Subsequent Embedded Base throughout the entire Subsequent Transition Period shall be the rate paid for that element at the time of the CNL posting, plus 15%.

11.8.6 No later than two hundred and seventy (270) calendar days from BellSouth's CNL identifying the Subsequent Wire Center List Level 3 shall submit a spreadsheet(s) identifying the Subsequent Embedded Base of circuits to be disconnected or converted to other BellSouth services. For Conversions as defined in Section 15, such spreadsheets shall take the place of an LSR or ASR. The Parties shall negotiate a project schedule for the Conversion of the Subsequent Embedded Base of circuits. If a Level 3 chooses to convert the Dark Fiber Transport to special access circuits, BellSouth will include such Dark Fiber Transport once converted within Level 3's total special access circuits and apply any discounts to which Level 3 is entitled. The Parties shall negotiate a project schedule for the Conversion of the Subsequent Embedded Base.

11.8.6.1 If Level 3 submits the spreadsheet(s) for its Subsequent Embedded Base within two hundred and seventy (270) calendar days from BellSouth's CNL identifying the Subsequent Wire Center List, those identified circuits shall be subject to the Commission-approved switch-as-is charge.

11.8.6.2 If Level 3 fails to submit the spreadsheet(s) for all of its Subsequent Embedded Base within two hundred and seventy (270) calendar days after the date of BellSouth's CNL identifying the Subsequent Wire Center List, BellSouth will identify Level 3's remaining Subsequent Embedded Base, if any, and will transition such circuits to the equivalent tariffed BellSouth service(s) subject to the switch-as-is charge established by the Commission.

11.8.7 For Subsequent Embedded Base circuits converted or transitioned, the applicable recurring tariff charges shall apply on the first day after the end of the Subsequent Transition Period. The transition of the Subsequent Embedded Base circuits should be performed in a manner that avoids, or otherwise, minimizes to the extent possible, disruption or degradation to Level 3's customers' service.

**Issue 13 – Should network elements de-listed under §251(c) (3) be removed from BellSouth's SQM/PMAP/SEEM?**

12. Level 3 may purchase and use Network Elements and Other Services from BellSouth in accordance with 47 C.F.R §51.309. Performance Measurements associated with this Attachment 2 are contained in Attachment 9. The quality of the Network Elements provided pursuant to §251, as well as the quality of the access to said Network Elements that BellSouth provides to Level 3, shall be, to the extent technically feasible, at least equal to that which BellSouth provides to itself, and its affiliates.

13. The Parties shall comply with the requirements as set forth in the technical references within this Attachment 2. BellSouth shall comply with the requirements set forth in the technical reference TR73400, as well as any performance or other requirements identified in this Agreement, to the extent that they are consistent with the greater of BellSouth's actual performance or applicable industry standards. If one or more of the requirements set forth in this Agreement are in conflict, the technical reference TR73600 requirements shall apply. If the parties cannot reach agreement, the dispute resolution process set forth in the General Terms and Conditions of this Agreement shall apply.

**Issue 14 – What is the scope of commingling allowed under the FCC's rules and orders and what language should be included in Interconnection Agreements to implement commingling (including rates)?**

14. Commingling of Services

14.1 Commingling means the connecting, attaching, or otherwise linking of a Network Element, or a Combination, to one or more Telecommunications Services or facilities that Level 3 has obtained at wholesale from BellSouth, or the combining of a Network Element or Combination with one or more such wholesale Telecommunications Services or facilities. The wholesale services that can be commingled with Network Elements or a Combination include network elements required to be unbundled under Section 271. Level 3 must comply with all rates, terms or conditions applicable to such wholesale Telecommunications Services or facilities.

14.2 Subject to the limitations set forth elsewhere in this Attachment, BellSouth shall not deny access to a Network Element or a Combination on the grounds that one or more of the elements: 1) is connected to, attached to, linked to, or combined with such a facility or service obtained from BellSouth; or 2) shares part of BellSouth's network with access services or inputs for mobile wireless services and/or interexchange services.

14.3 Unless expressly prohibited by the terms of this Attachment, BellSouth shall permit Level 3 to Commingle an Unbundled Network Element or a Combination of unbundled Network Elements with wholesale services obtained from BellSouth, services obtained from third parties or facilities provided by Level 3. For purposes of example only, Level 3 may Commingle unbundled Network Elements or Combinations of unbundled Network Elements with wholesale services including switched and special access services, or services purchased under resale arrangements with BellSouth.

14.4 Unless otherwise agreed to by the Parties, the Network Element portion of a commingled circuit will be billed at the rates set forth in Exhibit B and the remainder of the circuit or service will be billed in accordance with BellSouth's tariffed rates or rates set forth by separate agreement.

14.5 When multiplexing equipment is attached to a commingled arrangement, the multiplexing equipment will be billed from the same agreement or the tariff as the higher bandwidth circuit. Central Office Channel Interfaces (COCI) will be billed from the same agreement or tariff as the lower bandwidth circuit.

14.6 Terms and conditions for order cancellation charges and Service Date Advancement Charges will apply in accordance with Attachment 2. The charges shall be as se forth in Exhibit A of Attachment 2 of the parties Agreement.

**Issue 15 – Is BellSouth required to provide conversion of special access circuits to UNE pricing, and, if so, what rates, terms and conditions and during what timeframe should such new requests for such conversions be effectuated?**

15. Conversion of Wholesale Services to Network Elements or Network Elements to Wholesale Services

15.1 Upon request, BellSouth shall convert a wholesale service, or group of wholesale services, to the equivalent Network Element or Combination that is available to Level 3 pursuant to Section 251 of the Act and under this Agreement, or convert a Network Element or Combination that is available to Level 3 pursuant to Section 251 of the Act and under this Agreement to an equivalent wholesale service or group of wholesale services offered by BellSouth (collectively "Conversion"). BellSouth shall charge the applicable nonrecurring Commission approved switch-as-is rates for Conversions to specific Network Elements or Combinations found in Exhibit B. BellSouth shall also charge the same nonrecurring switch-as-is rates when converting from Network Elements or Combinations. Any rate change resulting from the Conversion will be effective as of the next billing cycle following BellSouth's receipt of a complete and accurate Conversion request from Level 3. Any change from a wholesale service/group of wholesale services to a Network Element/Combination, or from a Network Element/Combination to a wholesale service/group of wholesale services that requires a physical rearrangement will not be considered to be a Conversion for purposes of this Agreement. BellSouth will not require physical rearrangements if the Conversion can be completed through record changes only. Orders for Conversions will be handled in accordance with the guidelines set forth in the Ordering Guidelines and Processes and CLEC Information Packages as referenced in Section 15.3 below.

15.2 Any outstanding conversions shall be effective on or after the effective date of this agreement.

15.3 Ordering Guidelines and Processes

15.3.1 For information regarding Ordering Guidelines and Processes for various Network Elements, Combinations and Other Services, Level 3 should refer to the "Guides" section of the BellSouth Interconnection Web site.

15.3.2 Additional information may also be found in the individual CLEC Information Packages located at the "CLEC UNE Products" on BellSouth's Interconnection Web site.

15.3.3 The provisioning of Network Elements, Combinations and Other Services to Level 3's Collocation Space will require cross-connections within the central office to connect the Network Element, Combinations or Other Services to the demarcation point associated with Level 3's Collocation Space. These cross-connects are separate components that are not considered a part of the Network Element, Combinations or Other Services and, thus, have a separate charge pursuant to this Agreement.

**Issue 19: LINE SPLITTING: What is the appropriate ICA language to implement BellSouth's obligations with regard to line splitting?**

16. Line Splitting

16.1 Line splitting shall mean that Level 3 purchases a whole loop and provides the splitter to provide voice and data services through an arrangement with a third party CLEC, who is either the provider of data services (a Data LEC) or the provider of voice services (a Voice CLEC) to deliver voice and data service to End Users over the same Loop. The Voice CLEC and Data LEC may be the same or different carriers.

16.2 Line Splitting – UNE-L. In the eventLevel 3 provides its own switching or obtains switching from a third party, Level 3 may engage in line splitting arrangements with another CLEC using a splitter, provided by Level 3, in a Collocation Space at the central office where the loop terminates into a distribution frame or its equivalent.

16.2.1 Provisioning Line Splitting and Splitter Space – UNE-L

16.2.1.1 Level 3 provides the splitter when providing Line Splitting with UNE-L. When Level 3 or its authorized agent owns the splitter, Line Splitting requires the following: a loop from NID at the End User's location to the serving wire center and terminating into a distribution frame or its equivalent.

16.2.1.2 An unloaded 2-wire copper Loop must serve the End User. The meet point for the Voice CLEC and the Data LEC is the point of termination on the MDF for the Data LEC's cable and pairs.

16.3 CLEC Provided Splitter – Line Splitting – UNE-L

16.3.1 To order High Frequency Spectrum on a particular Loop, Level 3 or its authorized agent must have a DSLAM collocated in the central office that serves the End User of such Loop.

16.3.2 Level 3 or its authorized agent may purchase, install and maintain central office POTS splitters in its collocation arrangements. Level 3 or its authorized agent may use such splitters for access to its customers and to provide digital line subscriber services to its customers using the High Frequency Spectrum. Existing Collocation rules and procedures and the terms and conditions relating to Collocation set forth in Attachment 4 Central Office shall apply.

16.3.3 Any splitters installed by Level 3 in its collocation arrangement shall comply with ANSI T1.413, Annex E, or any future ANSI splitter Standards. Level 3 may install any splitters that BellSouth deploys or permits to be deployed for itself or any BellSouth affiliate.

16.4 Maintenance – Line Splitting – UNE-L

16.4.1 BellSouth will be responsible for repairing voice troubles and the troubles with the physical loop between the NID at the End User's premises and the termination point.

16.4.2 BellSouth must make all necessary network modifications, including providing nondiscriminatory access to operations support systems necessary for pre-ordering, ordering provisioning, maintenance and repair, and billing for loops used in line splitting arrangements. BellSouth may use existing state commission collaboratives and change management processes to address OSS modifications that are necessary.

16.5 Indemnification

16.5.1 Level 3 shall indemnify, defend and hold harmless BellSouth from and against any claims, losses, and costs which arise out of actions related to the other service provider (i.e. CLEC party to the line splitting arrangement who is not Level 3), except to the extent caused by BellSouth's gross negligence or willful misconduct.

16.5.2 PROVIDED, HOWEVER, that all amounts advanced in respect of such claims, losses and costs shall be repaid to Level 3 by BellSouth if it shall ultimately be determined in a final judgment without further appeal by a court of appropriate jurisdiction that BellSouth is not entitled to be indemnified for such claims, losses and costs because the Claims, Losses and Costs arose as a result of BellSouth's gross negligence or willful misconduct.

16.5.3 BellSouth will indemnify, defend and hold harmless Level 3 from and against any Claims, Losses and Costs which arise out of actions related to the other service provider (i.e. CLEC party to the line splitting arrangement who is not Level 3 brought against Level 3 to the extent such Claim alleges that the cause of the Claim, Loss and Cost was the result of BellSouth's gross negligence or willful misconduct.

16.5.4 PROVIDED, HOWEVER, that BellSouth shall have no obligation to indemnify Level 3 under this section unless Level 3 provides BellSouth with prompt written notice of any such Claim; Level 3 permits BellSout to assume and control the defense to such action, with counsel chosen by BellSouth; and BellSouth does not enter into any settlement or compromise of such Claim.

16.5.5 PROVIDED, HOWEVER, that all amounts advanced in respect of such Claims, Losses and Costs shall be repaid to BellSouth by Level 3 if it shall ultimately be determined in a final judgment without further appeal by a court of appropriate jurisdiction that Level 3 is not entitled to be indemnified for such Claims, Losses and Costs because the Claims, Losses and Costs did not arises as a result of BellSouth's gross negligence or willful misconduct.

16.5.6 "Claim" means any threatened, pending or completed action, suit or proceeding, or any inquiry or investigation that BellSouth or Level 3 in good faith believes might lead to the institution of any such action, suit or proceeding.

16.5.7 "Loss" means any and all damages, injuries, judgments, fines penalties, amounts paid or payable in settlement, deficiencies, and expenses (including all interest, assessments, and other charges paid or payable in connection with or respect of such Losses) incurred in connection with the Claim.

16.5.8 "Costs" means all reasonable attorney's fees and all other reasonable fees, expenses and obligations paid or incurred in connection with the Claim or related matters, including without limitation, investigating, defending, or participating (as a party, witness or otherwise) in (including on appeal), or preparing to defend or participate in any Claim.

**Issue 22 – What is the appropriate ICA language, if any, to address call related databases?**

17. Call Related Databases and Signaling

17.1 Call Related Databases are the databases other than OSS, that are used in signaling networks, for billing and collection, or the transmission, routing or other provision of a Telecommunication Service. Notwithstanding anything to the contrary herein, BellSouth shall only provide unbundled access to call related databases and signaling including but not limited to, BellSouth Switched Access 8XX Toll Free Dialing Ten Digit Screening Service, LIDB, Signaling, Signaling Link Transport, STP, SS7 AIN Access, Service Control Point(SCP\Databases, Local Number Portability (LNP) Databases and Calling Name (CNAM) Database Service pursuant to this Agreement where BellSouth is required to provide and is providing Local Switching or UNE-P to Level 3 pursuant to this Agreement.

17.2 BellSouth Switched Access (SWA) 8XX Toll Free Dialing Ten Digit Screening Service

17.2.1 The BellSouth SWA 8XX Toll Free Dialing Ten Digit Screening Service database (8XX SCP Database) is a SCP that contains customer record information and the functionality to provide call-handling instructions for 8XX calls. The 8XX SCP IN software stores data downloaded from the national SMS/8XX database and provides the routing instructions in response to queries from the SSP or tandem. The BellSouth SWA 8XX Toll Free Dialing Ten Digit Screening Service (8XX TFD Service) utilizes the 8XX SCP Database to provide identification and routing of the 8XX calls, based on the ten digits dialed. At Level 3's option, 8XX TFD Service is provided with or without POTS number delivery, dialing number delivery, and other optional complex features as selected by Level 3.

17.2.2 The 8XX SCP Database is designated to receive and respond to queries using the ANSI Specification of SS7 protocol.

17.3 LIDB

17.3.1 LIDB is a transaction-oriented database accessible through Common Channel Signaling (CCS) networks. For access to LIDB, Level 3 must purchase appropriate signaling links pursuant to Section 17.4 below. LIDB contains records associated with End User Line Numbers and Special Billing Numbers. LIDB accepts queries from other Network Elements and provides appropriate responses. The query originator need not be the owner of LIDB data. LIDB queries include functions such as screening billed numbers that provides the ability to accept Collect or Third Number Billing calls and validation of Telephone Line Number based non-proprietary calling cards. The interface for the LIDB functionality is the interface between BellSouth's CCS network and other CCS networks. LIDB also interfaces to administrative systems.

17.3.2 Technical Requirements

17.3.2.1 BellSouth will offer to Level 3 any additional capabilities that are developed for LIDB during the life of this Agreement.

17.3.2.2 BellSouth shall process Level 3's customer records in LIDB at least at parity with BellSouth customer records, with respect to other LIDB functions. BellSouth shall indicate to Level 3 what additional functions (if any) are performed by LIDB in the BellSouth network.

17.3.2.3 Within two (2) weeks after a request by Level 3, BellSouth shall provide Level 3 with a list of the customer data items, which Level 3 would have to provide in order to support each required LIDB function. The list shall indicate which data items are essential to LIDB function and which are required only to support certain services. For each data item, the list shall show the data formats, the acceptable values of the data item and the meaning of those values.

17.3.2.4 BellSouth shall provide LIDB systems for which operating deficiencies that would result in calls being blocked shall not exceed thirty (30) minutes per year.

17.3.2.5 BellSouth shall provide LIDB systems for which operating deficiencies that would not result in calls being blocked shall not exceed twelve (12) hours per year.

17.3.2.6 BellSouth shall provide LIDB systems for which the LIDB function shall be in overload no more than twelve (12) hours per year.

17.3.2.7 All additions, updates and deletions of Level 3 data to the LIDB shall be solely at the direction of Level 3. Such direction from Level 3 will not be required where the addition, update or deletion is necessary to perform standard fraud control measures (e.g., calling card auto-deactivation).

17.3.2.8 BellSouth shall provide priority updates to LIDB for Level 3 data upon Level 3's request (e.g., to support fraud detection), via password-protected telephone card, facsimile, or electronic mail within one hour of notice from the established BellSouth contact.

17.3.2.9 BellSouth shall provide LIDB systems such that no more than 0.01% of Level 3 customer records will be missing from LIDB, as measured by Level 3 audits. BellSouth will audit Level 3 records in LIDB against Data Base Administration System (DBAS) to identify record mismatches and provide this data to a designated Level 3 contact person to resolve the status of the records and BellSouth will update system appropriately. BellSouth will refer record of mismatches to Level 3 within one (1) business day of audit. Once reconciled records are received back from Level 3, BellSouth will update LIDB the same business day if less than five hundred (500) records are received before 1:00 p.m. Central Time. If more than five hundred (500) records are received, BellSouth will contact Level 3 to negotiate a time frame for the updates, not to exceed three (3) business days.

17.3.2.10 BellSouth shall perform backup and recovery of all of Level 3's data in LIDB including sending to LIDB all changes made since the date of the most recent backup copy, in at least the same time frame BellSouth performs backup and recovery of BellSouth data in LIDB for itself. Currently, BellSouth performs backups of the LIDB for itself on a weekly basis; and when a new software release is scheduled, a backup is performed prior to loading the new release.

17.3.2.11 BellSouth shall provide Level 3 with LIDB reports of data which are missing or contain errors, as well as any misrouted errors, within a reasonable time period as negotiated between Level 3 and BellSouth.

17.3.2.12 BellSouth shall prevent any access to or use of Level 3 data in LIDB by BellSouth personnel that are outside of established administrative and fraud control personnel, or by any other Party that is not authorized by Level 3 in writing.

17.3.2.13 BellSouth shall provide Level 3 performance of the LIDB Data Screening function, which allows a LIDB to completely or partially deny specific query originators access to LIDB data owned by specific data owners, for Customer Data that is part of an NPA-NXX or RAO-0/1XX wholly or partially owned by Level 3 at least at parity with BellSouth Customer Data. BellSouth shall obtain from Level 3 the screening information associated with LIDB Data Screening of Level 3 data in accordance with this requirement. BellSouth currently does not have LIDB Data Screening capabilities. When such capability is available, BellSouth shall offer it to Level 3 under the BFR/NBR Process as set forth in Attachment 11

17.3.2.14 BellSouth shall accept queries to LIDB associated with Level 3 customer records and shall return responses in accordance with industry standards.

17.3.2.15 BellSouth shall provide mean processing time at the LIDB within 0.50 seconds under normal conditions as defined in industry standards.

17.3.2.16 BellSouth shall provide processing time at the LIDB within one (1) second for ninety-nine percent (99%) of all messages under normal conditions as defined in industry standards.

17.3.2.17 Interface Requirements

17.3.17.1 BellSouth shall offer LIDB in accordance with the requirements of this subsection.

17.3.17.2 The interface to LIDB shall be in accordance with the technical references contained within.

17.3.17.3 The CCS interface to LIDB shall be the standard interface described herein.

17.3.17.4 The LIDB Data Base interpretation of the ANSI-TCAP messages shall comply with the technical reference herein. Global Title Translation (GTT) shall be maintained in the signaling network in order to support signaling network routing to the LIDB.

17.3.17.5 The application of the LIDB rates contained in Exhibit A will be based on a Percent CLEC LIDB Usage (PCLU) factor. Level 3 shall provide BellSouth a PCLU. The PCLU will be applied to determine the percentage of total LIDB usage to be billed to the other Party at local rates. Level 3 shall update its PCLU on the first of January, April, July and October and shall send it to BellSouth to be received no later than thirty (30) calendar days after the first of each such month based on local usage for the past three months ending the last day of December, March, June and September, respectively. Requirements associated with PCLU calculation and reporting shall be as set forth in BellSouth's Jurisdictional Factors Reporting Guide.

17.4 Signaling

BellSouth shall offer access to signaling and access to BellSouth's signaling databases subject to compatibility testing and at the rates set forth in this Attachment. BellSouth may provide mediated access to BellSouth signaling systems and databases. Available signaling elements include signaling links, STPs and SCPs. Signaling functionality will be available with both A-link and B-link connectivity.

17.4.1 Signaling Link Transport. Signaling Link Transport is a set of two (2) or four (4) dedicated 56 kbps transmission paths between Level 3 designated SPOI that provide appropriate physical diversity.

17.4.2 Technical Requirements

17.4.2.1 Signaling Link Transport shall consist of full duplex mode 56 kbps transmission paths and shall perform in the following two ways:

17.4.2.2 As an "A-link" Signaling Link Transport is a connection between a switch or SCP and a home STP switch pair; and

17.4.2.3 As a "B-link" Signaling Link Transport is a connection between two (2) STP switch pairs in different company networks (e.g., between two (2) STP switch pairs for two (2) CLECs).

17.4.2.4 Signaling Link Transport shall consist of two (2) or more signaling link layers as follows:

17.4.2.4.1 An A-link layer shall consist of two (2) links; and

17.4.2.4.2 A B-link layer shall consist of four (4) links.

17.4.2.5 A signaling link layer shall satisfy interoffice and intraoffice diversity of facilities and equipment, such that:

17.4.2.6 No single failure of facilities or equipment causes the failure of both links in an A-link layer (i.e., the links should be provided on a minimum of two (2) separate physical paths end-to-end); and

17.4.2.7 No two (2) concurrent failures of facilities or equipment shall cause the failure of all four (4) links in a B-link layer (i.e., the links should be provided on a minimum of three (3) separate physical paths end-to-end).

17.4.2.8 Interface Requirements. There shall be a DS1 (1.544 Mbps) interface at Level 3's designated SPOIs. Each 56 kbps transmission path shall appear as a DS0 channel within the DS1 interface.

17.5 STP. An STP is a signaling network function that includes all of the capabilities provided by the signaling transfer point switches and their associated signaling links that enables the exchange of SS7 messages among and between switching elements, database elements and signaling transfer point switches.

17.5.1 Technical Requirements

17.5.1.1 STPs shall provide access to BellSouth Local Switching or Tandem Switching and to BellSouth SCPs/Databases connected to BellSouth SS7 network. STPs also provide access to third party local or tandem switching and third party provided STPs.

17.5.1.2 The connectivity provided by STPs shall fully support the functions of all other Network Elements connected to the BellSouth SS7 network. This includes the use of the BellSouth SS7 network to convey messages that neither originate nor terminate at a signaling end point directly connected to the BellSouth SS7 network (i.e., transit messages). When the BellSouth SS7 network is used to convey transit messages, there shall be no alteration of the Integrated Services Digital Network User Part (ISDNUP) or Transaction Capabilities Application Part (TCAP) user data that constitutes the content of the message. Rates for ISDNUP and TCAP messages are as set forth in Exhibit A.

17.5.1.3 If a BellSouth tandem switch routes traffic, based on dialed or translated digits, on SS7 trunks between a Level 3 local switch and third party local switch, the BellSouth SS7 network shall convey the TCAP messages that are necessary to provide Call Management features (Automatic Callback, Automatic Recall, and Screening List Editing) between Level 3 local STPs and the STPs that provide connectivity with the third party local switch, even if the third party local switch is not directly connected to BellSouth STPs.

17.5.1.4 STPs shall provide all functions of the SCCP necessary for Class 0 (basic connectionless) service as defined in Telcordia ANSI Interconnection Requirements. This includes GTT and SCCP Management procedures, as specified in ANSI T1.112.4. Where the destination signaling point is a Level 3 or third party local or tandem switching system directly connected to BellSouth SS7 network, BellSouth shall perform final GTT of messages to the destination and SCCP Subsystem Management of the destination. In all other cases, BellSouth shall perform intermediate GTT of messages to a gateway pair of STPs in an SS7 network connected with BellSouth SS7 network and shall not perform SCCP Subsystem Management of the destination. If BellSouth performs final GTT to a Level 3 database, then Level 3 agrees to provide BellSouth with the Destination Point Code for Level 3 database.

17.5.1.5 STPs shall provide all functions of the Operations, Maintenance and Administration Part (OMAP) as specified in applicable industry standard technical references, which may include, where available in BellSouth's network, MTP Routing Verification Test (MRVT) and SCCP Routing Verification Test (SRVT).

17.5.1.6 Where the destination signaling point is a BellSouth local or tandem switching system or database, or is a Level 3 or third party local or tandem switching system directly connected to the BellSouth SS7 network, STPs shall perform MRVT and SRVT to the destination signaling point. In all other cases, STPs shall perform MRVT and SRVT to a gateway pair of STPs in an SS7 network connected with the BellSouth SS7 network. This requirement may be superseded by the specifications for Internetwork MRVT and SRVT when these become approved ANSI standards and available capabilities of BellSouth STPs.

17.6 SS7

17.6.1 When technically feasible and upon request by Level 3, SS7 AIN Access shall be made available in association with switching. SS7 AIN Access is the provisioning of AIN 0.1 triggers in an equipped BellSouth local switch and interconnection of the BellSouth SS7 network with Level 3's SS7 network to exchange TCAP queries and responses with a Level 3 SCP.

17.6.2 SS7 AIN Access shall provide Level 3 SCP access to an equipped BellSouth local switch via interconnection of BellSouth's SS7 and Level 3 SS7 Networks. BellSouth shall offer SS7 AIN Access through its STPs. If BellSouth requires a mediation device on any part of its network specific to this form of access, BellSouth must route its messages in the same manner. The interconnection arrangement shall result in the BellSouth local switch recognizing the Level 3 SCP as at least at parity with BellSouth's SCPs in terms of interfaces, performance and capabilities.

17.6.3 Interface Requirements

17.6.3.1 BellSouth shall provide the following STP options to connect Level 3 or Level 3-designated Local Switching systems to the BellSouth SS7 network:

17.6.3.1.1 An A-link interface from Level 3 Local Switching systems; and

17.6.3.1.2 A B-link interface from Level 3 local STPs.

17.6.4 Each type of interface shall be provided by one or more layers of signaling links.

17.6.5 The SPOI for each link shall be located at a cross-connect element in the CO where the BellSouth STP is located. There shall be a DS1 or higher rate transport interface at each of the SPOIs. Each signaling link shall appear as a DS0 channel within the DS1 or higher rate interface.

17.6.6 BellSouth shall provide intraoffice diversity between the SPOI and BellSouth STPs so that no single failure of intraoffice facilities or equipment shall cause the failure of both B-links in a layer connecting to a BellSouth STP.

17.6.7 STPs shall provide all functions of the MTP as defined in the applicable industry standard technical references.

17.6.8 Message Screening

17.6.8.1 BellSouth shall set message screening parameters so as to accept valid messages from Level 3 local or tandem switching systems destined to any signaling point within BellSouth's SS7 network where the Level 3 switching system has a valid signaling relationship.

17.6.8.2 BellSouth shall set message screening parameters so as to pass valid messages from Level 3 local or tandem switching systems destined to any signaling point or network accessed through BellSouth's SS7 network where the Level 3 switching system has a valid signaling relationship.

17.6.8.3 BellSouth shall set message screening parameters so as to accept and pass/send valid messages destined to and from Level 3 from any signaling point or network interconnected through BellSouth's SS7 network where the Level 3 SCP has a valid signaling relationship.

17.7 SCP/Databases

17.7.1 Call Related Databases provide the storage of, access to, and manipulation of information required to offer a particular service and/or capability. BellSouth shall provide access to the following Databases: LNP, LIDB, Toll Free Number Database, ALI/DMS, and CNAM Database. BellSouth also provides access to SCE/SMS application databases and DA.

17.7.2 A SCP is deployed in a SS7 network that executes service application logic in response to SS7 queries sent to it by a switching system also connected to the SS7 network. SMS provides operational interfaces to allow for provisioning, administration and maintenance of subscriber data and service application data stored in SCPs.

17.7.3 Technical Requirements for SCPs/Databases

17.7.3.1 BellSouth shall provide physical access to SCPs through the SS7 network and protocols with TCAP as the application layer protocol.

17.7.3.2 BellSouth shall provide physical interconnection to databases via industry standard interfaces and protocols (e.g., SS7, ISDN and X.25).

17.7.3.3 The reliability of interconnection options shall be consistent with requirements for diversity and survivability.

17.7.4 LNP Database. The Permanent Number Portability (PNP) database supplies routing numbers for calls involving numbers that have been ported from one local service provider to another. BellSouth agrees to provide access to the PNP database at rates, terms and conditions as set forth by BellSouth and in accordance with an effective FCC or Commission directive.

17.7.5 CNAM Database Service

17.7.5.1 CNAM is the ability to associate a name with the calling party number, allowing the End User (to which a call is being terminated) to view the calling party's name before the call is answered. The calling party's information is accessed by queries launched to the CNAM database. This service also provides Level 3 the opportunity to load and store its subscriber names in the BellSouth CNAM SCPs.

17.7.5.2 Level 3 shall submit to BellSouth a notice of its intent to access and utilize BellSouth CNAM Database Services. Said notice shall be in writing no less than sixty (60) days prior to Level 3's access to BellSouth's CNAM Database Services and shall be addressed to Level 3's Local Contract Manager.

17.7.5.3 Level 3's End Users' names and numbers related to UNE-P Services and shall be stored in the BellSouth CNAM database, and shall be available, on a per query basis only, to all entities that launch queries to the BellSouth CNAM database. BellSouth, at its sole discretion, may opt to interconnect with and query other calling name databases. In the event BellSouth does not query a third party calling name database that stores the calling party's information, BellSouth cannot deliver the calling party's information to a called End User. In addition, BellSouth cannot deliver the calling party's information where the calling party subscribes to any service that would block or otherwise cause the information to be unavailable.

17.7.5.4 For each Level 3 End User that subscribes to a switch based vertical feature providing calling name information to that End User for calls received, BellSouth will launch a query on a per call basis to the BellSouth CNAM database, or, subject to Section 17.7.5.3 above, to a third party calling name database, to provide calling name information, if available, to Level 3's End User. Level 3 shall pay the rates set forth in Exhibit A, on a per query basis, for each query to the BellSouth CNAM database made on behalf of an Level 3 End User that subscribes to the appropriate vertical features that support Caller ID or a variation thereof. In addition, Level 3 shall reimburse BellSouth for any charges BellSouth pays to third party calling name database providers for queries launched to such database providers for the benefit of Level 3's End Users.

17.7.5.5 BellSouth currently does not have a billing mechanism for CNAM queries. Until a mechanized billing solution is available for CNAM queries, BellSouth shall bill Level 3 at the applicable rates set forth in Exhibit A based on a surrogate of two hundred and fifty-six (256) database queries per month per Level 3's End Users with the Caller ID feature.

17.7.6 SCE/SMS AIN Access

17.7.6.1 BellSouth's SCE/SMS AIN Access shall provide Level 3 the capability to create service applications in a BellSouth SCE and deploy those applications in a BellSouth SMS to a BellSouth SCP.

17.7.6.2 BellSouth's SCE/SMS AIN Access shall provide access to SCE hardware, software, testing and technical support (e.g., help desk, system administrator) resources available to Level 3. Training, documentation, and technical support will address use of SCE and SMS access and administrative functions but will not include support for the creation of a specific service application.

17.7.6.3 BellSouth SCP shall partition and protect Level 3 service logic and data from unauthorized access.

17.7.6.4 When Level 3 selects SCE/SMS AIN Access, BellSouth shall provide training, documentation, and technical support to enable Level 3 to use BellSouth's SCE/SMS AIN Access to create and administer applications.

17.7.6.5 Level 3 access will be provided via remote data connection (e.g., dial-in, ISDN).

17.7.6.6 BellSouth shall allow Level 3 to download data forms and/or tables to BellSouth SCP via BellSouth SMS without intervention from BellSouth.

17.7.7 Automatic Location Identification/Data Management System

18. 911 and E911 Databases

18.1 BellSouth shall provide Level 3 with nondiscriminatory access to 911 and E911 databases on an unbundled basis, in accordance with 47 C.F.R. § 51.319 (f).

18.2 The ALI/DMS database contains End User information (including name, address, telephone information, and sometimes special information from the local service provider or End User) used to determine to which PSAP to route the call. The ALI/DMS database is used to provide enhanced routing flexibility for E911. Level 3 will be required to provide the BellSouth 911 database vendor daily service order updates to E911 database in accordance with Section 18.3.1 below.

18.3 Technical Requirements

18.3.1 BellSouth's 911 database vendor shall provide Level 3 the capability of providing updates to the ALI/DMS database through a specified electronic interface. Level 3 shall contact BellSouth's 911 database vendor directly to request interface. Level 3 shall provide updates directly to BellSouth's 911 database vendor on a daily basis.

Updates shall be the responsibility of Level 3 and BellSouth shall not be liable for the transactions between Level 3 and BellSouth's 911 database vendor.

18.3.2 It is Level 3's responsibility to retrieve and confirm statistical data and to correct errors obtained from BellSouth's 911 database vendor on a daily basis. All errors will be assigned a unique error code and the description of the error and the corrective action is described in the CLEC Users Guide for Facility Based Providers that is found on the BellSouth Interconnection Web site.

18.3.3 Level 3 shall conform to the BellSouth standards as described in the CLEC Users Guide to E911 for Facilities Based Providers that is located on the BellSouth's Interconnection Web site.

18.3.4 Stranded Unlocks are defined as End User records in BellSouth's ALI/DMS database that have not been migrated for over ninety (90) days to Level 3, as a new provider of local service to the End User. Stranded Unlocks are those End User records that have been "unlocked" by the previous local exchange carrier that provided service to the End User and are open for Level 3 to assume responsibility for such records.

18.3.5 Based upon End User record ownership information available in the NPAC database, BellSouth shall provide a Stranded Unlock annual report to Level 3 that reflects all Stranded Unlocks that remain in the ALI/DMS database for over ninety (90) days. Level 3 shall review the Stranded Unlock report, identify its End User records and request to either delete such records or migrate the records to Level 3 within two (2) months following the date of the Stranded Unlock report provided by BellSouth. Level 3 shall reimburse BellSouth for any charges BellSouth's database vendor imposes on BellSouth for the deletion of Level 3's records.

19. 911 PBX Locate Service®. 911 PBX Locate Service is comprised of a database capability and a separate transport component.

19.1 Description of Product. The transport component provides a dedicated trunk path from a Private Branch Exchange (PBX) switch to the appropriate BellSouth 911 tandem.

19.2 The database capability allows Level 3 to offer an E911 service to its PBX End Users that identifies to the PSAP the physical location of the Level 3 PBX 911 End User station telephone number for the 911 call that is placed by the End User.

19.3 Level 3 may order either the database capability or the transport component as desired or Level 3 may order both components of the service.

19.4 911 PBX Locate Database Capability. Level 3's End User or Level 3's End User's database management agent (DMA) must provide the End User PBX station telephone numbers and corresponding address and location data to BellSouth's 911 database vendor. The data will be loaded and maintained in BellSouth's ALI database.

19.5 Ordering, provisioning, testing and maintenance shall be provided by Level 3 pursuant to the 911 PBX Locate Marketing Service Description (MSD) that is located on the BellSouth Interconnection Web site.

19.6 Level 3's End User, or Level 3's End User database management agent must provide ongoing updates to BellSouth's 911 database vendor within a commercially reasonable timeframe of all PBX station telephone number adds, moves and deletions. It will be the responsibility of Level 3 to ensure that the End User or DMA maintain the data pertaining to each End User's extension managed by the 911 PBX Locate Service product. Level 3 should not submit telephone number updates for specific PBX station telephone numbers that are submitted by Level 3's End User, or Level 3's End User DMA under the terms of 911 PBX Locate product.

19.7 Level 3 must provision all PBX station numbers in the same LATA as the E911 tandem.

19.8 Level 3 agrees to release, indemnify, defend and hold harmless BellSouth from any and all loss, claims, demands, suits, or other action, or any liability whatsoever, whether suffered, made, instituted or asserted by Level 3's End User or by any other party or person, for any personal injury to or death of any person or persons, or for any loss, damage or destruction of any property, whether owned by Level 3 or others, or for any infringement or invasion of the right of privacy of any person or persons, caused or claimed to have been caused, directly or indirectly, by the installation, operation, failure to operate, maintenance, removal, presence, condition, location or use of PBX Locate Service features or by any services which are or may be furnished by BellSouth in connection therewith, including but not limited to the identification of the telephone number, address or name associated with the telephone used by the party or parties accessing 911 services using 911 PBX Locate Service hereunder, except to the extent caused by BellSouth's gross negligence or willful misconduct. Level 3 is responsible for assuring that its authorized End Users comply with the provisions of these terms and that unauthorized persons do not gain access to or use the 911 PBX Locate Service through user names, passwords, or other identifiers assigned to Level 3's End User or DMA pursuant to these terms. Specifically, Level 3's End User or DMA must keep and protect from use by any unauthorized individual identifiers, passwords, and any other security token(s) and devices that are provided for access to this product.

19.9 Level 3 may only use BellSouth PBX Locate Service solely for the purpose of validating and correcting 911 related data for Level 3's End Users' telephone numbers for which it has direct management authority.

19.10 911 PBX Locate Transport Component. The 911 PBX Locate Service transport component requires Level 3 to order a CAMA type dedicated trunk from Level 3's End User premise to the appropriate BellSouth 911 tandem pursuant to the following provisions.

19.11 Except as otherwise set forth below, a minimum of two (2) End User specific, dedicated 911 trunks are required between the Level 3's End User premise and the BellSouth 911 tandem as described in BellSouth's Technical Reference (TR) 73576 and in accordance with the 911 PBX Locate Marketing Service Description located on the BellSouth Interconnection Web site. Level 3 is responsible for connectivity between the End User's PBX and Level 3's switch or POP location. Level 3 will then order 911 trunks from their switch or POP location to the BellSouth 911 tandem. The dedicated trunks shall be, at a minimum, DS0 level trunks configured as part of a digital interface (delivered over a Level 3 purchased DS1 facility that hands off at a DS1 or higher level digital or optical interface). Level 3 is responsible for ensuring that the PBX switch is capable of sending the calling station's Direct Inward Dial (DID) telephone number to the BellSouth 911 tandem in a specified Multi-frequency (MF) Address Signaling Protocol. If the PBX switch supports Primary Rate ISDN (PRI) and the calling stations are DID numbers, then the 911 call can be transmitted using PRI, and there will be no requirement for the PBX Locate Transport component.

19.12 Ordering and Provisioning. Level 3 will submit an Access Service Request (ASR) to BellSouth to order a minimum of two (2) End User specific 911 trunks from its switch or POP location to the BellSouth 911 tandem.

19.13 Testing and maintenance shall be provided by Level 3 pursuant to the 911 PBX Locate Marketing Service description that is located on the BellSouth Interconnection Web site.

19.14 Rates. Rates for the 911 PBX Locate Service database component are set forth in Exhibit C. Trunks and facilities for 911 PBX Locate transport component may be ordered by Level 3 pursuant to the terms and conditions set forth in Attachment 3 of the Agreement.

**<u>Issue 23</u> - What is the appropriate language to implement BellSouth's obligation, if any, to offer unbundled access to newly deployed or "greenfield" fiber loops, including fiber loops deployed to the minimum point of entry (MPOE) of a multiple dwelling unit that is predominantly residential and what, if any impact does the ownership of the inside wiring from the MPOE to each end user have one this obligation?**

**Issue 28: What is the appropriate language, if any, to address access to overbuild deployments of fiber to the home and fiber to the curb facilities?**

20. Fiber to the Home (FTTH) loops are local loops consisting entirely of fiber optic cable, whether dark or lit, serving an End User's premises or, in the case of predominantly residential multiple dwelling units (MDUs), a fiber optic cable, whether dark or lit, that extends to the MDU minimum point of entry (MPOE).

21. Fiber to the Curb (FTTC) loops are local loops consisting of fiber optic cable connecting to a copper distribution plant that is not more than five hundred (500) feet from the End User's premises or, in the case of predominantly residential MDUs, not more than five hundred (500) feet from the MDU's MPOE. The fiber optic cable in a FTTC loop must connect to a copper distribution plant at a serving area interface from which every other copper distribution subloop also is not more than five hundred (500) feet from the respective End User's premises.

22. Greenfield Requirements: In new build (Greenfield) areas, where BellSouth has only deployed FTTH/FTTC facilities, BellSouth is under no obligation to provide such FTTH and FTTC Loops. FTTH facilities include fiber loops deployed to the MPOE of a MDU that is predominately residential regardless of the ownership of the inside wiring from the MPOE to each End User in the MDU.

22.1 Overbuild Requirements: In FTTH/FTTC overbuild situations where Bellsouth also has copper loops, BellSouth will make those copper loops available to CLEC on an unbundled basis, until such time as BellSouth chooses to retire those copper loops using the FCC's network disclosure requirements. In these cases, BellSouth will offer a 64 Kbps second voice grade channel over its FTTH/FTTC facilities. BellSouth's retirement of copper loops must comply with Applicable Law.

22.2 DS1/DS3 Requirements: Notwithstanding the above, nothing in this Section shall limit BellSouth's obligation to offer CLECs unbundled DS1 and DS3 loops (or loop/transport combination) in any wire center where BellSouth is required to provide such loop facilities.

22.3 Subloops: BellSouth shall provide Level 3 with nondiscriminatory access to the subloop for access to multiunit premises wiring on an unbundled basis regardless of the capacity level or type of loop that the Level 3 seeks to provision for its customer. The subloop for access to multiunit premises wiring is defined as any portion of the loop that it is technically feasible to access at a terminal in the incumbent LEC's outside plant at or near a multiunit premises. One category of this subloop is inside wire, which is defined for purposes of this section as all loop plant owned or controlled by the incumbent LEC at a multiunit customer premises between the

minimum point of entry as defined in §68.105 of the FCC rules and the point of demarcation of the incumbent LEC's network as defined in § 68.3 of the FCC rules.

22.4 Upon notification by a requesting telecommunications carrier that it requests interconnection at a multiunit premises where BellSouth owns controls or leases wiring, BellSouth shall provide a single point of interconnection that is suitable for use by multiple carriers.

**Issue 24: What is the appropriate ICA language to implement BellSouth's obligation to provide unbundled access to hybrid loops?**

23. Hybrid loops are defined in the federal rules at 47 CFR §51.319(a)(2) as local loops, composed of both fiber optic cable, usually in the feeder plant, and copper twisted wire or cable, usually in the distribution plant. BellSouth shall provide Level 3with nondiscriminatory access to the time division multiplexing features, functions and capabilities of such hybrid loop, including DS1 and DS3 capacity under Section 251 where impairment exists, on an unbundled basis to establish a complete transmission path between BellSouth's central office and an End User's premises.

23.1 BellSouth shall not engineer the transmission capabilities of its network in a manner, or engage in any policy, practice, or procedure, that disrupts or degrades access to a local loop or subloop, including the time division multiplexing-based features, functions, and capabilities of a hybrid loop, for which a requesting telecommunications carrier may obtain or has obtained access pursuant to this Attachment.

**Issue 26: What is the appropriate ICA language to implement BellSouth's obligation to provide RNMs?**

**Issue 27: What is the appropriate process for establishing a rate, if any, to allow for the cost of a routine network modification that is not already recovered in Commission-approved recurring and nonrecurring rates? What is the appropriate language, if any, to incorporate into the ICAs?**

24. Routine Network Modifications

24.1 BellSouth will perform Routine Network Modifications (RNM) in accordance with FCC 47 CFR 51.319 (a)(7) and (e)(4) for Loops and Dedicated Transport provided under this Attachment. If BellSouth normally provides such RNM for its own customers and has recovered the costs for performing such modifications through the rates set forth in Exhibit A Attachment 2 of the Agreement, then BellSouth will perform such RNM at no additional charge. A routine network modification is an activity that BellSouth regularly undertakes for its own customers. Routine network

modifications include, but are not limited to, rearranging or splicing of cable; adding an equipment case; adding a doubler or repeater; adding a smart jack; installing a repeater shelf; adding a line card; and deploying a new multiplexer or reconfiguring an existing multiplexer. Routine network modifications may entail activities such as accessing manholes, deploying bucket trucks to reach aerial cable, and installing equipment casings. Routine network modifications do not include the construction of a new loop, or the installation of new aerial or buried cable for a CLEC.

24.2 Rates: BellSouth will provide for Level 3 at no additional charge, all RNM which BellSouth normall provides for its own customers and for which BellSouth recovers its costs through the rates set forth in Exhibit A Attachment 2 of the Agreement. BellSouth will otherwise perform Routine Network Modifications pursuant to the existing non-recurring charges and recurring rates ordered by the Alabama Public Service Commission for loop and transport facilities as set forth in Exhibit A Attachment 2 of the Agreement. For any RNM performed by BellSouth for which BellSouth alleges that its costs are not recovered through existing rates, BellSouth shall immediately petition the Commission to establish a permanent rate. The Commission will establish interim rates for such RNM that will be subject to true-up upon the establishment of a final rate.

24.3 If BellSouth does not normally provide a network modification requested by Level 3 for BellSouth customers, and does not recover the costs of the network modifications requested in the rates set forth in Exhibit A Attachment 2 of the Agreement, then such request will be handled as a project on an individual case basis ("ICB"). BellSouth will provide a price quote for the request and, upon receipt of payment from Level 3, BellSouth will perform the network modification.

24.4 RNM will be performed within the intervals established for the Network Element and subject to the performance measurements and associated remedies set forth in Attachment 9 of this Agreement. Either BellSouth or Level 3 may seek resolution of any dispute regarding the classification of a network modification as routine or non-routine from the Commission.

25. Line Conditioning

25.1 Definitions: Line Conditioning is defined as the removal from a copper Loop or copper Subloop of any device that could diminish the capability of the Loop or Subloop to deliver high-speed switched wireline telecommunications capability, including digital subscriber line service. Such devices include, but are not limited to, bridged taps, load coils, low pass filters, and range extenders. Excessive bridged taps are bridged taps that serve no network design purpose and that are beyond the limits set according to industry standards and/or the BellSouth's TR 73600 Unbundled Local Loop Technical Specification.

25.2 Rates: BellSouth shall perform line conditioning pursuant to the non-recurring rates and provisions ordered by the Alabama Public Service Commission in Docket 27821 which provides that BellSouth shall perform loop conditioning for loops less than 18,000 feet at no cost. Such rates were established pursuant to the Federal Communications Commission's forward-looking principles promulgated pursuant to Section 252 (d)(1) of the Act and in compliance with rules governing non-recurring costs in 47 CFR 51.507(e).

25.3 Technical Requirements: BellSouth shall condition Loops, as requested by Level 3, whether or not BellSouth offers advanced services to the End User on that Loop.

25.4 In some instances, Level 3 will require access to a copper twisted pair loop unfettered by any intervening equipment (e.g. fibers, load coils, range extenders, etc.), so that Level 3 can use the loop for a variety of services by attaching appropriate terminal equipment at the ends. Level 3 will determine the type of service that will be provided over the loop.

25.5 In those cases where Level 3 has requested that BellSouth modify a loop so that it no longer meets the technical parameters of the original loop type (e.g. voice grade, ISDN, ADSL, etc.) the resulting modified Loop will be ordered and maintained as a UCL. BellSouth shall provide the following: 1) removal of devices on 2-wire or 4-wire loops equal to or less than 18,000 feet at no additional cost, 2) removal of devices on 2-wire or 4-wire loops longer than 18,000 feet; and 3) removal of bridged-taps on loops of any length at rates established in APSC Docket 27821. (The specific non-recurring and recurring charges shall apply for each element ordered.)

25.6 Level 3 shall request Loop make-up information pursuant to this Attachment prior to submitting a service inquiry and/or a LSR for the Loop type that Level 3 desires BellSouth to condition.

**Issue 29: What is the appropriate ICA language to implement BellSouth's EEL audit rights, if any, under the TRO?**

26. EELs Audit provisions

26.1 BellSouth may audit Level 3's records in order to verify compliance with the high capacity EEL eligibility criteria. To invoke its limited right to audit, BellSouth shall send a written Notice of Audit to Level 3. Such Notice of Audit will be delivered to Level 3 no less than thirty (30) calendar days prior to the date upon which BellSouth seeks to commence an audit and shall set forth the reasons for the audit requested and the identity of the auditor selected by BellSouth. BellSouth shall not be required to obtain the consent of Level 3 with respect to the selection of the auditor. Level 3 may, however, challenge the legal qualifications of the auditor selected by filing an objection to that effect with the Commission within 10 days of receiving BellSouth's Notice of Audit.

26.2 The auditor selected shall be an independent third party retained and paid for by BellSouth. The audit must be performed in accordance with the standards established by the American Institute for Certified Public Accountants (AICPA) which will require the auditor to perform an "examination engagement" and issue an opinion regarding Level 3's compliance with the high capacity EEL eligibility criteria. AICPA standards and other AICPA requirements will be used to determine the independence of an auditor. The independent auditor's report will conclude whether Level 3 complied in all material respects with the applicable service eligibility criteria. Consistent with standard auditing practices, such audits require compliance testing designed by the independent auditor.

26.3 To the extent the independent auditor's report concludes that Level 3 failed to comply with the service eligibility criteria, Level 3 must true-up any difference in payments, convert all noncompliant circuits to the appropriate service, and make the correct payments on a going forward basis.

26.4 To the extent the independent auditor's report concludes that Level 3 failed to comply in all material respects with the service eligibility criteria, Level 3 shall reimburse BellSouth for the cost of the independent auditor. To the extent the independent auditor's report concludes that Level 3 did comply in all material respects with the service eligibility criteria, BellSouth will reimburse Level 3 for its reasonable and demonstrable costs associated with the audit. Level 3 will maintain appropriate documentation to support its certifications and may dispute any portion of the findings of an audit by petitioning the Commission for a review within 20 days of receiving the reported findings of the auditor.

27. Level 3 shall not obtain a Network Element for the exclusive provision of mobile wireless services or interexchange services.

28. Facilities that do not terminate at a demarcation point at an End User premises, including, by way of example, but not limited to, facilities that terminate to another carrier's switch or premises, a cell site, Mobile Switching Center or base station, do not constitute local Loops under Section 251, except to the extent that Level 3 may require Loops to such locations for the purpose of providing telecommunications services to its personnel at those locations.

29. Subloop Elements.

29.1 Where facilities permit, BellSouth shall offer access to its Unbundled Subloop (USL) elements as specified herein.

29.2 Unbundled Subloop Distribution (USLD)

29.2.1 The USLD facility is a dedicated transmission facility that BellSouth provides from an End User's point of demarcation to a BellSouth cross-connect device. The BellSouth cross-connect device may be located within a remote terminal (RT) or a stand-alone cross-box in the field or in the equipment room of a building. The USLD media is a copper twisted pair that can be provisioned as a 2-wire or 4-wire facility. BellSouth will make available the following subloop distribution offerings where facilities exist:

USLD – Voice Grade (USLD-VG)
Unbundled Copper Subloop (UCSL)
USLD – Intrabuilding Network Cable (USLD-INC (aka riser cable))

29.2.2 USLD-VG is a copper subloop facility from the cross-box in the field up to and including the point of demarcation at the End User's premises and may have load coils.

29.2.3 UCSL is a copper facility eighteen thousand (18,000) feet or less in length provided from the cross-box in the field up to and including the End User's point of demarcation. If available, this facility will not have any intervening equipment such as load coils between the End User and the cross-box.

29.2.4 If Level 3 requests a UCSL and it is not available, Level 3 may request the copper Subloop facility be modified pursuant to the ULM process to remove load coils and/or excessive bridged taps. If load coils and/or excessive bridged taps are removed, the facility will be classified as a UCSL.

29.2.5 USLD-INC is the distribution facility owned or controlled by BellSouth inside a building or between buildings on the same property that is not separated by a public street or road. USLD-INC includes the facility from the cross-connect device in the building equipment room up to and including the point of demarcation at the End User's premises.

29.2.6 Upon request for USLD-INC from Level 3, BellSouth will install a cross-connect panel in the building equipment room for the purpose of accessing USLD-INC pairs from a building equipment room. The cross-connect panel will function as a single

point of interconnection (SPOI) for USLD-INC and will be accessible by multiple carriers as space permits. BellSouth will place cross-connect blocks in twenty five (25) pair increments for Level 3's use on this cross-connect panel. Level 3 will be responsible for connecting its facilities to the twenty five (25) pair cross-connect block(s).

29.2.7 For access to Voice Grade USLD and UCSL, Level 3 shall install a cable to the BellSouth cross-box pursuant to the terms and conditions for physical collocation for remote sites set forth in Attachment 4. This cable would be connected by a BellSouth technician within the BellSouth cross-box during the set-up process. Level 3's cable pairs can then be connected to BellSouth's USL within the BellSouth cross-box by the BellSouth technician.

29.2.8 Through the SI process, BellSouth will determine whether access to USLs at the location requested by Level 3 is technically feasible and whether sufficient capacity exists in the cross-box. If existing capacity is sufficient to meet Level 3's request, then BellSouth will perform the site set-up as described in the CLEC Information Package, located at BellSouth's Interconnection Web site: www.interconnection.bellsouth.com/products/html/unes.html.

29.2.9 The site set-up must be completed before Level 3 can order Subloop pairs. For the site set-up in a BellSouth cross-connect box in the field, BellSouth will perform the necessary work to splice Level 3's cable into the cross-connect box. For the site set-up inside a building equipment room, BellSouth will perform the necessary work to install the cross-connect panel and the connecting block(s) that will be used to provide access to the requested USLs.

29.2.10 Once the site set-up is complete, Level 3 will request Subloop pairs through submission of a LSR form to the LCSC. OC is required with USL pair provisioning when Level 3 requests reuse of an existing facility, and the OC charge shall be billed in addition to the USL pair rate. For expedite requests by Level 3 for Subloop pairs, expedite charges will apply for intervals less than five (5) days.

29.2.11 USLs will be provided in accordance with BellSouth's TR73600 Unbundled Local Loop Technical Specifications.

29.3 Unbundled Network Terminating Wire (UNTW)

29.3.1 UNTW is unshielded twisted copper wiring that is used to extend circuits from an intra-building network cable terminal or from a building entrance terminal to an individual End User's point of demarcation. It is the final portion of the Loop that in multi-subscriber configurations represents the point at which the network branches out to serve individual subscribers.

29.3.2 This element will be provided in MDUs and/or Multi-Tenants Units (MTUs) where either Party owns wiring all the way to the End User's premises. Neither Party will provide this element in locations where the property owner provides its own wiring to the End User's premises, where a third party owns the wiring to the End User's premises.

29.3.3 Requirements

29.3.3.1 On a multi-unit premises, upon request of the other Party (Requesting Party), the Party owning the network terminating wire (Provisioning Party) will provide access to UNTW pairs on an Access Terminal that is suitable for use by multiple carriers at each Garden Terminal or Wiring Closet.

29.3.3.2 The Provisioning Party shall not be required to install new or additional NTW beyond existing NTW to provision the services of the Requesting Party.

29.3.3.3 In existing MDUs and/or MTUs in which BellSouth does not own or control wiring (INC/NTW) to the End Users premises, and Level 3 does own or control such wiring, Level 3 will install UNTW Access Terminals for BellSouth under the same terms and conditions as BellSouth provides UNTW Access Terminals to Level 3.

29.3.3.4 In situations in which BellSouth activates a UNTW pair, BellSouth will compensate Level 3 for each pair activated commensurate to the price specified in Level 3's Agreement.

29.3.3.5 Upon receipt of the UNTW SI requesting access to the Provisioning Party's UNTW pairs at a multi-unit premises, representatives of both Parties will participate in a meeting at the site of the requested access. The purpose of the site visit will include discussion of the procedures for installation and location of the Access Terminals. By request of the Requesting Party, an Access Terminal will be installed either adjacent to each of the Provisioning Party's Garden Terminal or inside each Wiring Closet. The Requesting Party will deliver and connect its central office facilities to the UNTW pairs within the Access Terminal. The Requesting Party may access any available pair on an Access Terminal. A pair is available when a pair is not being utilized to provide service or where the End User has requested a change in its local service provider to the Requesting Party. Prior to connecting the Requesting Party's service on a pair previously used by the Provisioning Party, the Requesting Party is responsible for ensuring the End User is no longer using the Provisioning Party's service or another CLEC's service before accessing UNTW pairs.

29.3.3.6 Access Terminal installation intervals will be established on an individual case basis.

29.3.3.7 The Requesting Party is responsible for obtaining the property owner's permission for the Provisioning Party to install an Access Terminal(s) on behalf of the Requesting Party. The submission of the SI by the Requesting Party will serve as certification by the Requesting Party that such permission has been obtained. If the property owner objects to Access Terminal installations that are in progress or within thirty (30) days after completion and demands removal of Access Terminals, the Requesting Party will be responsible for costs associated with removing Access Terminals and restoring the property to its original state prior to Access Terminals being installed.

29.3.3.8 The Requesting Party shall indemnify and hold harmless the Provisioning Party against any claims of any kind that may arise out of the Requesting Party's failure to obtain the property owner's permission. The Requesting Party will be billed for nonrecurring and recurring charges for accessing UNTW pairs at the time the Requesting Party activates the pair(s). The Requesting Party will notify the

Provisioning Party within five (5) business days of activating UNTW pairs using the LSR form.

29.3.3.9 If a trouble exists on a UNTW pair, the Requesting Party may use an alternate spare pair that serves that End User if a spare pair is available. In such cases, the Requesting Party will re-terminate its existing jumper from the defective pair to the spare pair. Alternatively, the Requesting Party will isolate and report troubles in the manner specified by the Provisioning Party. The Requesting Party must tag the UNTW pair that requires repair. If the Provisioning Party dispatches a technician on a reported trouble call and no UNTW trouble is found, the Provisioning Party will charge Requesting Party for time spent on the dispatch and testing the UNTW pair(s).

29.3.3.10 If the Requesting Party initiates the Access Terminal installation and the Requesting Party has not activated at least ten percent (10%) of the capacity of the Access Terminal installed pursuant to the Requesting Party's request for an Access Terminal within six (6) months of installation of the Access Terminal, the Provisioning Party will bill the Requesting Party a nonrecurring charge equal to the actual cost of provisioning the Access Terminal.

29.3.3.11 If the Provisioning Party determines that the Requesting Party is using the UNTW pairs without reporting the activation of the pairs, the Requesting Party will be billed for the use of that pair back to the date the End User began receiving service from the Requesting Party at that location. Upon request, the Requesting Party will provide copies of its billing record to substantiate such date. If the Requesting Party fails to provide such records, then the Provisioning Party will bill the Requesting Party back to the date of the Access Terminal installation.

| UNBUNDLED NETWORK ELEMENTS - Alabama | | | | | | | | | | | | | Attachment: 2 Exh B | | | |
|---|---|---|---|---|---|---|---|---|---|---|---|---|---|---|---|---|
| CATEGORY | RATE ELEMENTS | Interim | Zone | BCS | USOC | RATES($) | | | | | Svc Order Submitted Elec per LSR | Svc Order Submitted Manually per LSR | Incremental Charge - Manual Svc Order vs. Electronic-1st | Incremental Charge - Manual Svc Order vs. Electronic-Add'l | Incremental Charge - Manual Svc Order vs. Electronic-Disc 1st | Incremental Charge - Manual Svc Order vs. Electronic-Disc Add'l |
| | | | | | | | Nonrecurring | | Nonrecurring Disconnect | | OSS Rates($) | | | | | |
| | | | | | | Rec | First | Add'l | First | Add'l | SOMEC | SOMAN | SOMAN | SOMAN | SOMAN | SOMAN |
| | The "Zone" shown in the sections for stand-alone loops or loops as part of a combination refers to Geographically Deaveraged UNE Zones. To view Geographically Deaveraged UNE Zone Designations by Central Office, refer to internet Website: http://www.interconnection.bellsouth.com/become_a_clec/html/interconnection.htm | | | | | | | | | | | | | | | |
| UNBUNDLED EXCHANGE ACCESS LOOP | | | | | | | | | | | | | | | | |
| | 2-WIRE ANALOG VOICE GRADE LOOP | | | | | | | | | | | | | | | |
| | Switch-As-Is Conversion rate per UNE Loop, Single LSR, (per DS0) | | | UEA | URESL | | 5.59 | 5.59 | | | | | | | | |
| | Switch-As-Is Conversion rate per UNE Loop, Spreadsheet (per DS0) | | | UEA | URESP | | 5.59 | 5.59 | | | | | | | | |
| | 4-WIRE ANALOG VOICE GRADE LOOP | | | | | | | | | | | | | | | |
| | Switch-As-Is Conversion rate per UNE Loop, Single LSR, (per DS0) | | | UEA | URESL | | 5.59 | 5.59 | | | | | | | | |
| | Switch-As-Is Conversion rate per UNE Loop, Spreadsheet, (per DS0) | | | UEA | URESP | | 5.59 | 5.59 | | | | | | | | |
| | 4-WIRE DS1 DIGITAL LOOP | | | | | | | | | | | | | | | |
| | Switch-As-Is Conversion rate per UNE Loop, single LSR, (per DS1) | | | USL | URESL | | 5.59 | 5.59 | | | | | | | | |
| | Switch-As-Is Conversion rate per UNE Loop, Spreadsheet, (per DS1) | | | USL | URESP | | 5.59 | 5.59 | | | | | | | | |
| | 4-WIRE 19.2, 56 OR 64 KBPS DIGITAL GRADE LOOP | | | | | | | | | | | | | | | |
| | Switch-As-Is Conversion rate per UNE Loop, single LSR, (per DS0) | | | UDL | URESL | | 5.59 | 5.59 | | | | | | | | |
| | Switch-As-Is Conversion rate per UNE Loop, Spreadsheet, (per DS0) | | | UDL | URESP | | 5.59 | 5.59 | | | | | | | | |
| UNE LOOP COMMINGLING | | | | | | | | | | | | | | | | |
| | 2-WIRE ANALOG VOICE GRADE LOOP - COMMINGLING | | | | | | | | | | | | | | | |
| | 2-Wire Analog Voice Grade Loop - Service Level 2 w/Loop or Ground Start Signaling - Zone 1 | | 1 | NTCVG | UEAL2 | 14.38 | 88.00 | 55.00 | 47.24 | 7.44 | | | | | | |
| | 2-Wire Analog Voice Grade Loop - Service Level 2 w/Loop or Ground Start Signaling - Zone 2 | | 2 | NTCVG | UEAL2 | 22.85 | 88.00 | 55.00 | 47.24 | 7.44 | | | | | | |
| | 2-Wire Analog Voice Grade Loop - Service Level 2 w/Loop or Ground Start Signaling - Zone 3 | | 3 | NTCVG | UEAL2 | 36.14 | 88.00 | 55.00 | 47.24 | 7.44 | | | | | | |
| | 2-Wire Analog Voice Grade Loop - Service Level 2 w/Reverse Battery Signaling - Zone 1 | | 1 | NTCVG | UEAR2 | 14.38 | 88.00 | 55.00 | 47.24 | 7.44 | | | | | | |
| | 2-Wire Analog Voice Grade Loop - Service Level 2 w/Reverse Battery Signaling - Zone 2 | | 2 | NTCVG | UEAR2 | 22.85 | 88.00 | 55.00 | 47.24 | 7.44 | | | | | | |
| | 2-Wire Analog Voice Grade Loop - Service Level 2 w/Reverse Battery Signaling - Zone 3 | | 3 | NTCVG | UEAR2 | 36.14 | 88.00 | 55.00 | 47.24 | 7.44 | | | | | | |
| | Switch-As-Is Conversion rate per UNE Loop, Single LSR, (per DS0) | | | NTCVG | URESL | | 5.59 | 5.59 | | | | | | | | |
| | Switch-As-Is Conversion rate per UNE Loop, Spreadsheet (per DS0) | | | NTCVG | URESP | | 5.59 | 5.59 | | | | | | | | |
| | 4-WIRE ANALOG VOICE GRADE LOOP - COMMINGLING | | | | | | | | | | | | | | | |
| | 4-Wire Analog Voice Grade Loop - Zone 1 | | 1 | NTCVG | UEAL4 | 25.34 | 131.97 | 94.51 | 59.14 | 14.50 | | | | | | |
| | 4-Wire Analog Voice Grade Loop - Zone 2 | | 2 | NTCVG | UEAL4 | 38.58 | 131.97 | 94.51 | 59.14 | 14.50 | | | | | | |
| | 4-Wire Analog Voice Grade Loop - Zone 3 | | 3 | NTCVG | UEAL4 | 60.02 | 131.97 | 94.51 | 59.14 | 14.50 | | | | | | |
| | Switch-As-Is Conversion rate per UNE Loop, Single LSR, (per DS0) | | | NTCVG | URESL | | 5.59 | 5.59 | | | | | | | | |
| | Switch-As-Is Conversion rate per UNE Loop, Spreadsheet, (per DS0) | | | NTCVG | URESP | | 5.59 | 5.59 | | | | | | | | |
| | 4-WIRE DS1 DIGITAL LOOP - COMMINGLING | | | | | | | | | | | | | | | |
| | 4-Wire DS1 Digital Loop - Zone 1 | | 1 | NTCD1 | USLXX | 82.55 | 252.47 | 157.54 | 44.70 | 11.71 | | | | | | |
| | 4-Wire DS1 Digital Loop - Zone 2 | | 2 | NTCD1 | USLXX | 154.18 | 252.47 | 157.54 | 44.70 | 11.71 | | | | | | |
| | 4-Wire DS1 Digital Loop - Zone 3 | | 3 | NTCD1 | USLXX | 314.52 | 252.47 | 157.54 | 44.70 | 11.71 | | | | | | |
| | Switch-As-Is Conversion rate per UNE Loop, single LSR, (per DS1) | | | NTCD1 | URESL | | 5.59 | 5.59 | | | | | | | | |
| | Switch-As-Is Conversion rate per UNE Loop, Spreadsheet, (per DS1) | | | NTCD1 | URESP | | 5.59 | 5.59 | | | | | | | | |
| | 4-WIRE 19.2, 56 OR 64 KBPS DIGITAL GRADE LOOP - COMMINGLING | | | | | | | | | | | | | | | |

| UNBUNDLED NETWORK ELEMENTS - Alabama | | | | | | | | | | | | | Attachment: 2 Exh B | | | |
|---|---|---|---|---|---|---|---|---|---|---|---|---|---|---|---|---|
| CATEGORY | RATE ELEMENTS | Interim | Zone | BCS | USOC | RATES($) | | | | | Svc Order Submitted Elec per LSR | Svc Order Submitted Manually per LSR | Incremental Charge - Manual Svc Order vs. Electronic-1st | Incremental Charge - Manual Svc Order vs. Electronic-Add'l | Incremental Charge - Manual Svc Order vs. Electronic-Disc 1st | Incremental Charge - Manual Svc Order vs. Electronic-Disc Add'l |
| | | | | | | | Nonrecurring | | Nonrecurring Disconnect | | OSS Rates($) | | | | | |
| | | | | | | Rec | First | Add'l | First | Add'l | SOMEC | SOMAN | SOMAN | SOMAN | SOMAN | SOMAN |
| | 4 Wire Unbundled Digital Loop 2.4 Kbps - Zone 1 | | 1 | NTCUD | UDL2X | 26.09 | 126.27 | 88.80 | 59.14 | 14.50 | | | | | | |
| | 4 Wire Unbundled Digital Loop 2.4 Kbps - Zone 2 | | 2 | NTCUD | UDL2X | 35.95 | 126.27 | 88.80 | 59.14 | 14.50 | | | | | | |
| | 4 Wire Unbundled Digital Loop 2.4 Kbps - Zone 3 | | 3 | NTCUD | UDL2X | 37.88 | 126.27 | 88.80 | 59.14 | 14.50 | | | | | | |
| | 4 Wire Unbundled Digital Loop 4.8 Kbps - Zone 1 | | 1 | NTCUD | UDL4X | 26.09 | 126.27 | 88.80 | 59.14 | 14.50 | | | | | | |
| | 4 Wire Unbundled Digital Loop 4.8 Kbps - Zone 2 | | 2 | NTCUD | UDL4X | 35.95 | 126.27 | 88.80 | 59.14 | 14.50 | | | | | | |
| | 4 Wire Unbundled Digital Loop 4.8 Kbps - Zone 3 | | 3 | NTCUD | UDL4X | 37.88 | 126.27 | 88.80 | 59.14 | 14.50 | | | | | | |
| | 4 Wire Unbundled Digital Loop 9.6 Kbps - Zone 1 | | 1 | NTCUD | UDL9X | 26.09 | 126.27 | 88.80 | 59.14 | 14.50 | | | | | | |
| | 4 Wire Unbundled Digital Loop 9.6 Kbps - Zone 2 | | 2 | NTCUD | UDL9X | 35.95 | 126.27 | 88.80 | 59.14 | 14.50 | | | | | | |
| | 4 Wire Unbundled Digital Loop 9.6 Kbps - Zone 3 | | 3 | NTCUD | UDL9X | 37.88 | 126.27 | 88.80 | 59.14 | 14.50 | | | | | | |
| | 4 Wire Unbundled Digital 19.2 Kbps - Zone 1 | | 1 | NTCUD | UDL19 | 26.09 | 126.27 | 88.80 | 59.14 | 14.50 | | | | | | |
| | 4 Wire Unbundled Digital 19.2 Kbps - Zone 2 | | 2 | NTCUD | UDL19 | 35.95 | 126.27 | 88.80 | 59.14 | 14.50 | | | | | | |
| | 4 Wire Unbundled Digital 19.2 Kbps - Zone 3 | | 3 | NTCUD | UDL19 | 37.88 | 126.27 | 88.80 | 59.14 | 14.50 | | | | | | |
| | 4 Wire Unbundled Digital Loop 56 Kbps - Zone 1 | | 1 | NTCUD | UDL56 | 26.09 | 126.27 | 88.80 | 59.14 | 14.50 | | | | | | |
| | 4 Wire Unbundled Digital Loop 56 Kbps - Zone 2 | | 2 | NTCUD | UDL56 | 35.95 | 126.27 | 88.80 | 59.14 | 14.50 | | | | | | |
| | 4 Wire Unbundled Digital Loop 56 Kbps - Zone 3 | | 3 | NTCUD | UDL56 | 37.88 | 126.27 | 88.80 | 59.14 | 14.50 | | | | | | |
| | 4 Wire Unbundled Digital Loop 64 Kbps - Zone 1 | | 1 | NTCUD | UDL64 | 26.09 | 126.27 | 88.80 | 59.14 | 14.50 | | | | | | |
| | 4 Wire Unbundled Digital Loop 64 Kbps - Zone 2 | | 2 | NTCUD | UDL64 | 35.95 | 126.27 | 88.80 | 59.14 | 14.50 | | | | | | |
| | 4 Wire Unbundled Digital Loop 64 Kbps - Zone 3 | | 3 | NTCUD | UDL64 | 37.88 | 126.27 | 88.80 | 59.14 | 14.50 | | | | | | |
| | Switch-As-Is Conversion rate per UNE Loop, single LSR, (per DS0) | | | NTCUD | URESL | 0.00 | 5.59 | 5.59 | 0.00 | 0.00 | | | | | | |
| | Switch-As-Is Conversion rate per UNE Loop, Spreadsheet, (per DS0) | | | NTCUD | URESP | 0.00 | 5.59 | 5.59 | 0.00 | 0.00 | | | | | | |
| ADDITIONAL NETWORK ELEMENTS | | | | | | | | | | | | | | | | |
| | Optional Features & Functions: | | | | | | | | | | | | | | | |
| | Wholesale to UNE, Switch-As-Is Conversion Charge | | | UNCVX, U1TVX, UNCDX, U1TDX, UNC1X, U1TD1,UNC3X, U1TD3, UNCSX, U1TS1, UDF,UDFCX | UNCCC | | 5.59 | 5.59 | | | | | | | | |
| | Unbundled Misc Rate Element, SNE SAI, Single Network Element - Switch As Is Non-recurring Charge, per circuit (LSR) | I | | U1TVX, U1TDX, U1TD1, U1TD3, U1TS1, UDF, UE3 | URESL | | 5.59 | 5.59 | | | | | | | | |
| | Unbundled Misc Rate Element, SNE SAI, Single Network Element - Switch As Is Non-recurring Charge, incremental charge per circuit on a spreadsheet | i | | U1TVX, U1TDX, U1TD1, U1TD3, U1TS1, UDF, UE3 | URESP | | 5.59 | 5.59 | | | | | | | | |
| COMMINGLING | | | | | | | | | | | | | | | | |
| | Commingling Authorization | | | UNCVX, UNCDX, UNC1X, UNC3X, UNCSX, U1TD1, U1TD3, U1TS1, UE3, UDLSX, U1TVX, U1TDX, U1TUB, ULDVX, ULDD1, ULDD3, ULDS1 | CMGAU | 0.00 | 0.00 | 0.00 | 0.00 | 0.00 | | | | | | |
| | Commingled (UNE part of single bandwidth circuit) | | | | | | | | | | | | | | | |
| | Commingled VG COCI | | | XDV2X, NTCVG | 1D1VG | 0.56 | 6.58 | 4.72 | | | | | | | | |
| | Commingled Digital COCI | | | XDV6X, NTCUD | 1D1DD | 1.19 | 6.58 | 4.72 | | | | | | | | |
| | Commingled ISDN COCI | | | XDD4X | UC1CA | 2.41 | 6.58 | 4.72 | | | | | | | | |
| | Commingled 2-wire VG Interoffice Channel | | | XDV2X | U1TV2 | 21.13 | 40.54 | 27.41 | 16.74 | 6.90 | | | | | | |
| | Commingled 4-wire VG Interoffice Channel | | | XDV6X | U1TV4 | 18.73 | 40.54 | 27.41 | 16.74 | 6.90 | | | | | | |
| | Commingled 56kbps Interoffice Channel | | | XDD4X | U1TD5 | 15.12 | 40.54 | 27.41 | 16.74 | 6.90 | | | | | | |
| | Commingled 64kbps Interoffice Channel | | | XDD4X | U1TD6 | 15.12 | 40.54 | 27.41 | 16.74 | 6.90 | | | | | | |
| | Commingled VG/DS0 Interoffice Channel Mileage | | | XDV2X, XDV6X, XDD4X | 1L5XX | 0.008838 | | | | | | | | | | |
| | Commingled 2-wire Local Loop Zone 1 | | 1 | XDV2X | UEAL2 | 14.38 | 88.00 | 55.00 | 47.24 | 7.44 | | | | | | |
| | Commingled 2-wire Local Loop Zone 2 | | 2 | XDV2X | UEAL2 | 22.85 | 88.00 | 55.00 | 47.24 | 7.44 | | | | | | |

| UNBUNDLED NETWORK ELEMENTS - Alabama | | | | | | | | | | | | | Attachment: 2 Exh B | | | |
|---|---|---|---|---|---|---|---|---|---|---|---|---|---|---|---|---|
| CATEGORY | | RATE ELEMENTS | Interim | Zone | BCS | USOC | RATES($) | | | | | Svc Order Submitted Elec per LSR | Svc Order Submitted Manually per LSR | Incremental Charge - Manual Svc Order vs. Electronic-1st | Incremental Charge - Manual Svc Order vs. Electronic-Add'l | Incremental Charge - Manual Svc Order vs. Electronic-Disc 1st | Incremental Charge - Manual Svc Order vs. Electronic-Disc Add'l |
| | | | | | | | | Nonrecurring | | Nonrecurring Disconnect | | OSS Rates($) | | | | | |
| | | | | | | | Rec | First | Add'l | First | Add'l | SOMEC | SOMAN | SOMAN | SOMAN | SOMAN | SOMAN |
| | | Commingled 2-wire Local Loop Zone 3 | | 3 | XDV2X | UEAL2 | 36.14 | 88.00 | 55.00 | 47.24 | 7.44 | | | | | | |
| | | Commingled 4-wire Local Loop Zone 1 | | 1 | XDV6X | UEAL4 | 25.34 | 131.97 | 94.51 | 59.14 | 14.50 | | | | | | |
| | | Commingled 4-wire Local Loop Zone 2 | | 2 | XDV6X | UEAL4 | 38.58 | 131.97 | 94.51 | 59.14 | 14.50 | | | | | | |
| | | Commingled 4-wire Local Loop Zone 3 | | 3 | XDV6X | UEAL4 | 60.02 | 131.97 | 94.51 | 59.14 | 14.50 | | | | | | |
| | | Commingled 56kbps Local Loop Zone 1 | | 1 | XDD4X | UDL56 | 26.09 | 126.27 | 88.80 | 59.14 | 14.50 | | | | | | |
| | | Commingled 56kbps Local Loop Zone 2 | | 2 | XDD4X | UDL56 | 35.95 | 126.27 | 88.80 | 59.14 | 14.50 | | | | | | |
| | | Commingled 56kbps Local Loop Zone 3 | | 3 | XDD4X | UDL56 | 37.88 | 126.27 | 88.80 | 59.14 | 14.50 | | | | | | |
| | | Commingled 64kbps Local Loop Zone 1 | | 1 | XDD4X | UDL64 | 26.09 | 126.27 | 88.80 | 59.14 | 14.50 | | | | | | |
| | | Commingled 64kbps Local Loop Zone 2 | | 2 | XDD4X | UDL64 | 35.95 | 126.27 | 88.80 | 59.14 | 14.50 | | | | | | |
| | | Commingled 64kbps Local Loop Zone 3 | | 3 | XDD4X | UDL64 | 37.88 | 126.27 | 88.80 | 59.14 | 14.50 | | | | | | |
| | | Commingled ISDN Local Loop Zone 1 | | 1 | XDD4X | U1L2X | 21.88 | 117.24 | 79.77 | 52.88 | 10.54 | | | | | | |
| | | Commingled ISDN Local Loop Zone 2 | | 2 | XDD4X | U1L2X | 32.85 | 117.24 | 79.77 | 52.88 | 10.54 | | | | | | |
| | | Commingled ISDN Local Loop Zone 3 | | 3 | XDD4X | U1L2X | 48.55 | 117.24 | 79.77 | 52.88 | 10.54 | | | | | | |
| | | Commingled DS1 COCI | | | XDH1X, NTCD1 | UC1D1 | 13.47 | 6.58 | 4.72 | | | | | | | | |
| | | Commingled DS1 Interoffice Channel | | | XDH1X | U1TF1 | 60.16 | 89.27 | 81.81 | 16.35 | 14.44 | | | | | | |
| | | Commingled DS1 Interoffice Channel Mileage | | | XDH1X | 1L5XX | 0.18 | | | | | | | | | | |
| | | Commingled DS1/DS0 Channel System | | | XDH1X | MQ1 | 107.19 | 91.04 | 62.57 | 10.54 | 9.79 | | | | | | |
| | | Commingled DS1 Local Loop Zone 1 | | 1 | XDH1X | USLXX | 82.55 | 252.47 | 157.54 | 44.70 | 11.71 | | | | | | |
| | | Commingled DS1 Local Loop Zone 2 | | 2 | XDH1X | USLXX | 154.18 | 252.47 | 157.54 | 44.70 | 11.71 | | | | | | |
| | | Commingled DS1 Local Loop Zone 3 | | 3 | XDH1X | USLXX | 314.52 | 252.47 | 157.54 | 44.70 | 11.71 | | | | | | |
| | | Commingled DS3 Local Loop | | | HFQC6 | UE3PX | 308.08 | 451.52 | 263.94 | 119.49 | 83.58 | | | | | | |
| | | Commingled DS3/STS-1 Local Loop Mileage | | | HFQC6, HFRST | 1L5ND | 8.38 | | | | | | | | | | |
| | | Commingled STS-1 Local Loop | | | HFRST | UDLS1 | 319.83 | 451.52 | 263.94 | 119.49 | 83.58 | | | | | | |
| | | Commingled DS3/DS1 Channel System | | | HFQC6 | MQ3 | 176.20 | 178.14 | 93.97 | 33.26 | 31.83 | | | | | | |
| | | Commingled DS3 Interoffice Channel | | | HFQC6 | U1TF3 | 703.52 | 278.75 | 162.76 | 60.20 | 58.46 | | | | | | |
| | | Commingled DS3 Interoffice Channel Mileage | | | HFQC6 | 1L5XX | 4.09 | | | | | | | | | | |
| | | Commingled STS-1Interoffice Channel | | | HFRST | U1TFS | 701.37 | 278.75 | 162.76 | 60.20 | 58.46 | | | | | | |
| | | Commingled STS-1Interoffice Channel Mileage | | | HFRST | 1L5XX | 4.09 | | | | | | | | | | |
| | | Commingled Dark Fiber - Interoffice Transport, Per Four Fiber Strands, Per Route Mile Or Fraction Thereof | | | HEQDL | 1L5DF | 22.34 | | | | | | | | | | |
| | | Commingled Dark Fiber - Interoffice Transport, Per Four Fiber Strands, Per Route Mile Or Fraction Thereof | | | HEQDL | UDF14 | | 639.09 | 137.87 | 317.06 | 197.66 | | | | | | |

**Amendment to the Agreement**
**Between**
**Level 3 Communications, L.L.C.**
**and**
**BellSouth Telecommunications, Inc.**
**Dated June 23, 2004**

Pursuant to this Amendment, (the "Amendment"), Level 3 Communications, LLC. (Level 3), and BellSouth Telecommunications, Inc. (BellSouth), hereinafter referred to collectively as the "Parties", hereby agree to amend that certain Interconnection Agreement between the Parties dated June 23, 2004 (Agreement).

WHEREAS, on March 10, 2006, the Public Service Commission of South Carolina (Commission) issued Order No. 2006-136 in Docket No. 2004-316-C (Order), Proceeding to Consider Amendments to Interconnection Agreements Between BellSouth Telecommunications, Inc. and Competitive Local Exchange Carriers Due to Changes of Law.

WHEREAS, the Parties are obligated to amend the Agreement to bring it in compliance with the Commission's Order;

NOW, THEREFORE, in consideration of the mutual provisions contained herein and other good and valuable consideration, the receipt and sufficiency of which are hereby acknowledged, the Parties hereby covenant and agree as follows:

1. The Parties hereby agree to incorporate into the Agreement the contract provisions set forth in Exhibit A hereto, and such contract provisions shall apply to services provided in the State of South Carolina only.

2. The Parties hereby agree to incorporate into the Agreement the rates set forth in Exhibit B hereto, and such rates shall apply to services provided in the State of South Carolina only.

3. To the extent that such contract provisions or rates as set forth in Exhibits A and B hereto conflict with any other rates, terms and conditions in the Agreement, the contract provisions and rates in Exhibits A and B shall prevail in the State of South Carolina.

4. Further, to the extent that defined terms in this Amendment differ from defined terms in the Agreement, such defined terms in the Agreement shall be deemed to have the same meaning as the alternative defined terms in this Amendment to the extent necessary to give full effect to this Amendment consistent with the Public Service Commission of South Carolina's Order.

5. This Amendment shall be deemed effective on March 11, 2006 (Effective Date).

6. All of the other provisions of the Agreement shall remain in full force and effect.

7. Either or both of the Parties are authorized to submit this Amendment to the South Carolina Public Service Commission for approval subject to Section 252(e) of the Federal Telecommunications Act of 1996.

IN WITNESS WHEREOF, the Parties have executed this Amendment the day and year written below.

"**Effective on 3/11/06 pursuant to the SCPSC's Order in Docket 2004-316-C**"

| **BellSouth Telecommunications, Inc.** | **Level 3 Communications, L.L.C.** |
|---|---|
| By: | By: |
| Name: Kristen E. Shore | Name: |
| Title: Director | Title: |
| Date: | Date: |

# Attachment 2

# Network Elements and Other Services

# TABLE OF CONTENTS

**1 Introduction.....3**

**2 Loops.....6**

**3 Line Splitting.....21**

**4 Local Switching.....25**

**5 EEL Audits……..…….26**

**6 Dedicated Transport and Dark Fiber Transport.....28**

**7 Call Related Databases and Signaling.....37**

**8 Automatic Location Identification/Data Management System.....47**

## ACCESS TO NETWORK ELEMENTS AND OTHER SERVICES

### 1 Introduction

1.1 This Attachment sets forth rates, terms and conditions for unbundled network elements (Network Elements) and combinations of Network Elements (Combinations) that BellSouth offers to Level 3 for Level 3's provision of Telecommunications Services in accordance with its obligations under Section 251(c)(3) of the Act. Additionally, this Attachment sets forth the rates, terms and conditions for other facilities and services BellSouth makes available to Level 3 (Other Services). Additionally, the provision of a particular Network Element or Other Service may require Level 3 to purchase other Network Elements or services. In the event of a conflict between this Attachment and any other section or provision of this Agreement, the provisions of this Attachment shall control.

1.2 Level 3 shall not obtain a Network Element for the exclusive provision of mobile wireless services or interexchange services.

1.3 Conversion of Wholesale Services to Network Elements or Network Elements to Wholesale Services. Upon request, BellSouth shall convert a wholesale service, or group of wholesale services, to the equivalent Network Element or Combination that is available to Level 3 pursuant to Section 251 of the Act and under this Agreement or convert a Network Element or Combination that is available to Level 3 pursuant to Section 251 of the Act and under this Agreement to an equivalent wholesale service or group of wholesale services offered by BellSouth (collectively "Conversion"). BellSouth shall charge the applicable nonrecurring switch-as-is rates for Conversions to specific Network Elements or Combinations found in Exhibit B. BellSouth shall also charge the same nonrecurring switch-as-is rates when converting from Network Elements or Combinations. Any rate change resulting from the Conversion will be effective as of the next billing cycle following BellSouth's receipt of a complete and accurate Conversion request from Level 3. A Conversion shall be considered termination for purposes of any volume and/or term commitments and/or grandfathered status between Level 3 and BellSouth. Any change from a wholesale service/group of wholesale services to a Network Element/Combination, or from a Network Element/Combination to a wholesale service/group of wholesale services, that requires a physical rearrangement will not be considered to be a Conversion for purposes of this Agreement. BellSouth will not require physical rearrangements if the Conversion can be completed through record changes only. Orders for Conversions will be handled in accordance with the guidelines set forth in the Ordering Guidelines and Processes and CLEC Information Packages as referenced in Sections 1.8.1 and 1.8.2 below.

1.4 Except to the extent expressly provided otherwise in this Attachment, Level 3 may not maintain unbundled network elements or combinations of unbundled network elements, that are no longer offered pursuant to this Agreement (collectively

"Arrangements"). In the event BellSouth determines that Level 3 has in place any Arrangements after the Effective Date of this Agreement, BellSouth will provide Level 3 with thirty (30) days written notice to disconnect or convert such Arrangements. If Level 3 fails to submit orders to disconnect or convert such Arrangements within such thirty (30) day period, BellSouth will transition such circuits to the equivalent tariffed BellSouth service(s). Those circuits identified and transitioned by BellSouth pursuant to this Section 1.4 shall be subject to all applicable disconnect charges as set forth in this Agreement and the full nonrecurring charges for installation of the equivalent tariffed BellSouth service as set forth in BellSouth's tariffs. The applicable recurring tariff charge shall apply to each circuit as of the Effective Date of this Agreement.

1.5 Prior to submitting an order pursuant to this Agreement for high capacity (DS1 or above) Dedicated Transport or high capacity Loops, Level 3 shall undertake a reasonably diligent inquiry to determine whether Level 3 is entitled to unbundled access to such Network Elements in accordance with the terms of this Agreement. By submitting any such order, Level 3 self-certifies that to the best of Level 3's knowledge, the high capacity Dedicated Transport or high capacity Loop requested is available as a Network Element pursuant to this Agreement. Upon receiving such order, BellSouth shall process the request in reliance upon Level 3's self-certification. To the extent BellSouth believes that such request does not comply with the terms of this Agreement, BellSouth shall seek dispute resolution in accordance with the General Terms and Conditions of this Agreement. In the event such dispute is resolved in BellSouth's favor, BellSouth shall bill Level 3 the difference between the rates for such circuits pursuant to this Agreement and the applicable nonrecurring and recurring charges for the equivalent tariffed service from the date of installation to the date the circuit is transitioned to the equivalent tariffed service. Within thirty (30) days following a decision finding in BellSouth's favor, Level 3 shall submit a spreadsheet identifying those non-compliant circuits to be transitioned to tariffed services or disconnected.

***1.5.1*** ***In the event that (1) BellSouth designates a wire center as non-impaired, (2) CLEC converts existing UNEs to other services or orders new services as services other than UNEs, (3) CLEC otherwise would have been entitled to UNEs in such wire center at the time alternative services were provisioned, and (4) BellSouth acknowledges or a state or federal regulatory body with authority determines that, at the time BellSouth designated such wire center as non-impaired, such wire center did not meet the FCC's non-impairment criteria, then upon request of CLEC, BellSouth shall transition to UNEs any alternative services in such wire center that were established after such wire center was designated as non-impaired. In such instances, BellSouth shall refund CLEC the difference between the rate paid by CLEC for such services and the applicable UNE rate, including but not limited to any charges associated with the unnecessary conversion from UNE to other wholesale services.***

1.6 BellSouth will perform Routine Network Modifications (RNM) in accordance with FCC 47 C.F.R. § 51.319 (a)(7) and (e)(4) for Loops and Dedicated Transport provided under this Attachment. If BellSouth has anticipated such RNM and performs them during normal operations and has recovered the costs for performing such modifications through the rates set forth in Exhibit A of Attachment 2of the Agreement, then BellSouth shall perform such RNM at no additional charge. RNM shall be performed within the intervals established for the Network Element and subject to the performance measurements and associated remedies set forth in Attachment 9 of this Agreement to the extent such RNM were anticipated in the setting of such intervals. If BellSouth has not anticipated a requested network modification as being a RNM and has not recovered the costs of such RNM in the rates set forth in Exhibit A of Attachment 2 of the Agreement, then such request will be handled as a project on an individual case basis. BellSouth will provide a price quote for the request and, upon receipt of payment from Level 3, BellSouth shall perform the RNM.

1.7 Commingling of Services

1.7.1 Commingling means the connecting, attaching, or otherwise linking of a Network Element, or a Combination, to one or more Telecommunications Services or facilities that Level 3 has obtained at wholesale from BellSouth, or the combining of a Network Element or Combination with one or more such wholesale Telecommunications Services or facilities. Level 3 must comply with all rates, terms or conditions applicable to such wholesale Telecommunications Services or facilities.

1.7.2 Subject to the limitations set forth elsewhere in this Attachment, BellSouth shall not deny access to a Network Element or a Combination on the grounds that one or more of the elements: (1) is connected to, attached to, linked to, or combined with such a facility or service obtained from BellSouth; or (2) shares part of BellSouth's network with access services or inputs for mobile wireless services and/or interexchange services.

1.7.3 Unless otherwise agreed to by the Parties, the Network Element portion of a commingled circuit will be billed at the rates set forth in Exhibit B and the remainder of the circuit or service will be billed in accordance with BellSouth's tariffed rates or rates set forth in a separate agreement between the Parties.

1.7.4 When multiplexing equipment is attached to a commingled circuit, the multiplexing equipment will be billed from the same agreement or tariff as the higher bandwidth circuit. Central Office Channel Interfaces (COCI) will be billed from the same agreement or tariff as the lower bandwidth circuit.

1.7.5 Notwithstanding any other provision of this Agreement, BellSouth shall not be obligated to commingle or combine Network Elements or Combinations with any

service, network element or other offering that it is obligated to make available only pursuant to Section 271 of the Act.

1.8 Ordering Guidelines and Processes

1.8.1 For information regarding Ordering Guidelines and Processes for various Network Elements, Combinations and Other Services, Level 3 should refer to the "Guides" section of the BellSouth Interconnection Web site.

1.8.2 Additional information may also be found in the individual CLEC Information Packages located at the "CLEC UNE Products" on BellSouth's Interconnection Web site at: www.interconnection.bellsouth.com/guides/html/unes.html.

**2 Loops**

2.1 General. The local loop Network Element is defined as a transmission facility that BellSouth provides pursuant to this Attachment between a distribution frame (or its equivalent) in BellSouth's central office and the loop demarcation point at an End User premises (Loop). Facilities that do not terminate at a demarcation point at an End User premises, including, by way of example, but not limited to, facilities that terminate to another carrier's switch or premises, a cell site, Mobile Switching Center or base station, do not constitute local Loops ***under Section 251, except to the extent that CLEC may require Loops to such locations for the purpose of providing telecommunications services to its personnel at those locations.*** The Loop Network Element includes all features, functions, and capabilities of the transmission facilities, including the network interface device, and attached electronics (except those used for the provision of advanced services, such as Digital Subscriber Line Access Multiplexers (DSLAMs)), optronics and intermediate devices (including repeaters and load coils) used to establish the transmission path to the End User's premises, including inside wire owned or controlled by BellSouth. Level 3 shall purchase the entire bandwidth of the Loop and, except as required herein or as otherwise agreed to by the Parties, BellSouth shall not subdivide the frequency of the Loop.

2.1.1 The Loop does not include any packet switched features, functions or capabilities.

2.1.2 Fiber to the Home (FTTH) loops are local loops consisting entirely of fiber optic cable, whether dark or lit, serving an End User's premises or, in the case of predominantly residential multiple dwelling units (MDUs), a fiber optic cable, whether dark or lit, that extends to the MDU minimum point of entry (MPOE). Fiber to the Curb (FTTC) loops are local loops consisting of fiber optic cable connecting to a copper distribution plant that is not more than five hundred (500) feet from the End User's premises or, in the case of predominantly residential MDUs, not more than five hundred (500) feet from the MDU's MPOE. The fiber

optic cable in a FTTC loop must connect to a copper distribution plant at a serving area interface from which every other copper distribution subloop also is not more than five hundred (500) feet from the respective End User's premises.

2.1.2.1 In new build (Greenfield) areas, where BellSouth has only deployed FTTH/FTTC facilities, BellSouth is under no obligation to provide Loops. FTTH facilities include fiber loops deployed to the MPOE of a MDU that is predominantly residential regardless of the ownership of the inside wiring from the MPOE to each End User in the MDU. Notwithstanding the foregoing, in such Greenfield areas that are served from an impaired wire center, BellSouth shall make available UNE DS1 Loops as described in this Attachment.

2.1.2.2 In FTTH/FTTC overbuild situations where BellSouth also has copper Loops, BellSouth will make those copper Loops available to Level 3 on an unbundled basis, until such time as BellSouth chooses to retire those copper Loops using the FCC's network disclosure requirements. In these cases, BellSouth will offer a sixty-four (64) kilobits per ***second (kbps) voice*** grade channel over its FTTH/FTTC facilities.

2.1.2.3 Furthermore, in FTTH/FTTC overbuild areas where BellSouth has not yet retired copper facilities, BellSouth is not obligated to ensure that such copper Loops in that area are capable of transmitting signals prior to receiving a request for access to such Loops by Level 3. If a request is received by BellSouth for a copper Loop, and the copper facilities have not yet been retired, BellSouth will restore the copper Loop to serviceable condition if technically feasible. In these instances of Loop orders in an FTTH/FTTC overbuild area, BellSouth's standard Loop provisioning interval will not apply, and the order will be handled on a project basis by which the Parties will negotiate the applicable provisioning interval.

2.1.3 A hybrid Loop is a local Loop, composed of both fiber optic cable, usually in the feeder plant, and copper twisted wire or cable, usually in the distribution plant. BellSouth shall provide Level 3 with nondiscriminatory access to the time division multiplexing features, functions and capabilities of such hybrid Loop, on an unbundled basis to establish a complete transmission path between BellSouth's central office and an End User's premises. Notwithstanding the foregoing, in an impaired wire center, BellSouth shall make available hybrid Loops as described in this Attachment.

2.1.4 Transition for DS1 and DS3 Loops

2.1.4.1 For purposes of this Section 2, the Transition Period for the Embedded Base of DS1 and DS3 Loops and for the Excess DS1 and DS3 Loops (defined in 2.1.4.3) is the twelve (12) month period beginning March 11, 2005 and ending March 10, 2006.

2.1.4.2 For purposes of this Section 2, Embedded Base means DS1 and DS3 Loops that were in service for Level 3 as of March 10, 2005 in those wire centers that, as of

such date, met the criteria set forth in Sections 2.1.4.5.1 or 2.1.4.5.2 below. ***For the state of South Carolina, during the Transition Period Level 3 shall be entitled to order and BellSouth shall provision moves, changes and additions of and to DS1 and DS3 Loops that Level 3 orders for the purpose of serving CLEC's existing DS1 and DS3 End Users as of March 10, 2005, at such End Users' new or existing physical locations, and such facilities shall be included in the Embedded Base.*** Subsequent disconnects or loss of End Users shall be removed from the Embedded Base.

2.1.4.3 Excess DS1 and DS3 Loops are those Level 3 DS1 and DS3 Loops in service as of March 10, 2005, in excess of the caps set forth in Sections 2.2.6.2 and 2.2.12 below, respectively. Subsequent disconnects or loss of End Users shall be removed from Excess DS1 and DS3 Loops.

2.1.4.4 For purposes of this Section 2, a Business Line is defined in 47 C.F.R. § 51.5.

2.1.4.5 Notwithstanding anything to the contrary in this Agreement, and except as set forth in Section 2.1.4.12 below, BellSouth shall make available DS1 and DS3 Loops as described in this Section 2.1.4 only for Level 3's Embedded Base ***and Excess DS1 and DS3 loops*** during the Transition Period:

2.1.4.5.1 DS1 Loops at any location within the service area of a wire center containing 60,000 or more Business Lines and four (4) or more fiber-based collocators.

2.1.4.5.2 DS3 Loops at any location within the service area of a wire center containing 38,000 or more Business Lines and four (4) or more fiber-based collocators.

2.1.4.6 A list of wire centers meeting the criteria set forth in Sections 2.1.4.5.1 and 2.1.4.5.2 above as of March 10, 2005 (Initial Wire Center List) as ordered by the Public Service Commission of South Carolina in Docket No. 2004-316-C, is attached to BellSouth's Carrier Notification Letter SN91086058, dated March 20, 2006, which is available on BellSouth's Interconnection Services Web site.

2.1.4.7 Notwithstanding the Effective Date of this Agreement, during the Transition Period, the rates for Level 3's Embedded Base of DS1 and DS3 Loops and Level 3's Excess DS1 and DS3 Loops described in this Section 2.1.4 shall be equal to the higher of 115% of the rate paid for that element on June 15, 2004 or 115% of a new rate the Commission establishes, if any, between June 16, 2004 and March 11, 2005. These rates shall be as set forth in Exhibit A to Attachment 2 of the Agreement and this Section 2.1.4.7.

2.1.4.8 The Transition Period shall apply only to (1) Level 3's Embedded Base and (2) Level 3's Excess DS1 and DS3 Loops. Level 3 shall not add new DS1 or DS3 loops as described in this Section 2.1.4 pursuant to this Agreement, except pursuant to the self-certification process as set forth in Section 1.8 of this Attachment and as set forth in Section 2.1.4.12 below.

2.1.4.9 Once a wire center exceeds both of the thresholds set forth in Section 2.1.4.5.1 above, no future DS1 Loop unbundling will be required in that wire center.

2.1.4.10 Once a wire center exceeds both of the thresholds set forth in Section 2.1.4.5.2 above, no future DS3 Loop unbundling will be required in that wire center.

2.1.4.11 No later than December 9, 2005 Level 3 shall submit spreadsheet(s) identifying all of the Embedded Base of circuits and Excess DS1 and DS3 Loops to be either disconnected or converted to other BellSouth services pursuant to Section 1.3 above. The Parties shall negotiate a project schedule for the Conversion of the Embedded Base and Excess DS1 and DS3 Loops.

2.1.4.11.1 If Level 3 fails to submit the spreadsheet(s) specified in Section 2.1.4.11 above for all of its Embedded Base and Excess DS1 and DS3 Loops prior to December 9, 2005, BellSouth will identify Level 3's remaining Embedded Base and Excess DS1 and DS3 Loops, if any, and will transition such circuits to the equivalent tariffed BellSouth service(s). Those circuits identified and transitioned by BellSouth pursuant to this Section 2.1.4.11.1 shall be subject to all applicable disconnect charges as set forth in this Agreement and the full nonrecurring charges for installation of the equivalent tariffed BellSouth service as set forth in BellSouth's tariffs.

2.1.4.11.2 For Embedded Base circuits and Excess DS1 and DS3 Loops converted pursuant to Section 2.1.4.11 above or transitioned pursuant to Section 2.1.4.11.1 above, the applicable recurring tariff charge shall apply to each circuit as of the earlier of the date each circuit is converted or transitioned, as applicable, or March 11, 2006.

2.1.4.12 Modifications and Updates to the Wire Center List and Subsequent Transition Periods

2.1.4.12.1 In the event BellSouth identifies additional wire centers that meet the criteria set forth in Section 2.1.4.5 above, but that were not included in the Initial Wire Center List, BellSouth shall include such additional wire centers in a carrier notification letter (CNL). Each such list of additional wire centers shall be considered a "Subsequent Wire Center List".

2.1.4.12.2 Effective ten (10) business days after the date of a BellSouth CNL providing a Subsequent Wire Center List, BellSouth shall not be required to unbundle DS1 and/or DS3 Loops, as applicable, in such additional wire center(s), except pursuant to the self-certification process as set forth in Section 1.5 of this Attachment.

2.1.4.12.3 For purposes of Section 2.1.4.12 above, BellSouth shall make available DS1 and DS3 Loops that were in service for Level 3 in a wire center on the Subsequent Wire Center List as of the tenth ($10^{th}$) business day after the date of BellSouth's CNL identifying the Subsequent Wire Center List (Subsequent Embedded Base) until ninety (90) days after the tenth (10th) business day from the date of

BellSouth's CNL identifying the Subsequent Wire Center List (Subsequent Transition Period).

2.1.4.12.4 Subsequent disconnects or loss of End Users shall be removed from the Subsequent Embedded Base.

2.1.4.12.5 The rates set forth in Exhibit A of Attachment 2 of the Agreement plus 15% shall apply to the Subsequent Embedded Base during the Subsequent Transition Period.

2.1.4.12.6 No later than forty (40) days from BellSouth's CNL identifying the Subsequent Wire Center List, Level 3 shall submit a spreadsheet(s) identifying the Subsequent Embedded Base of circuits to be disconnected or converted to other BellSouth services. The Parties shall negotiate a project schedule for the Conversion of the Subsequent Embedded Base.

2.1.4.12.6.1 If Level 3 fails to submit the spreadsheet(s) specified in Section 2.1.4.12.6 above for all of its Subsequent Embedded Base within forty (40) days after the date of BellSouth's CNL identifying the Subsequent Wire Center List, BellSouth will identify Level 3's remaining Subsequent Embedded Base, if any, and will transition such circuits to the equivalent tariffed BellSouth service(s). Those circuits identified and transitioned by BellSouth shall be subject to the applicable disconnect charges as set forth in this Agreement and the full nonrecurring charges for installation of the equivalent tariffed BellSouth service as set forth in BellSouth's tariffs.

2.1.4.12.6.2 For Subsequent Embedded Base circuits converted pursuant to Section 2.1.4.12.6 above or transitioned pursuant to Section 2.1.4.12.6.1 above, the applicable recurring tariff charges shall apply as of the earlier of the date each circuit is converted or transitioned, as applicable, or the first day after the end of the Subsequent Transition Period.

2.2 Unbundled Digital Loops

2.2.1 BellSouth will offer UDLs. UDLs are service specific, will be designed, will be provisioned with test points (where appropriate), and will come standard with OC and a DLR. The various UDLs are intended to support a specific digital transmission scheme or service.

2.2.2 BellSouth shall make available the following UDLs, subject to restrictions set forth herein:

2.2.2.1 2-wire Unbundled ISDN Digital Loop;

2.2.2.2 2-wire Unbundled ADSL Compatible Loop;

2.2.2.3 2-wire Unbundled HDSL Compatible Loop;

2.2.2.4 4-wire Unbundled HDSL Compatible Loop;

2.2.2.5 4-wire Unbundled DS1 Digital Loop;

2.2.2.6 4-wire Unbundled Digital Loop/DS0 – 64 kbps, 56 kbps and below;

2.2.2.7 DS3 Loop; or

2.2.2.8 STS-1 Loop.

2.2.3 2-wire Unbundled ISDN Digital Loops. These will be provisioned according to industry standards for 2-Wire Basic Rate ISDN services and will come standard with a test point, OC, and a DLR. Level 3 will be responsible for providing BellSouth with a Service Profile Identifier (SPID) associated with a particular ISDN-capable Loop and End User. With the SPID, BellSouth will be able to adequately test the circuit and ensure that it properly supports ISDN service.

2.2.4 2-wire ADSL-Compatible Loop. This is a designed Loop that is provisioned according to Revised Resistance Design (RRD) criteria and may be up to 18,000 feet long and may have up to 6,000 feet of bridged tap (inclusive of Loop length). The Loop is a 2-wire circuit and will come standard with a test point, OC, and a DLR.

2.2.5 2-wire or 4-wire HDSL-Compatible Loop. This is a designed Loop that meets Carrier Serving Area (CSA) specifications, may be up to 12,000 feet long and may have up to 2,500 feet of bridged tap (inclusive of Loop length). It may be a 2-wire or 4-wire circuit and will come standard with a test point, OC, and a DLR.

2.2.6 4-wire Unbundled DS1 Digital Loop.

2.2.6.1 This is a designed 4-wire Loop that is provisioned according to industry standards for DS1 or Primary Rate ISDN services and will come standard with a test point, OC, and a DLR. A DS1 Loop may be provisioned over a variety of loop transmission technologies including copper, HDSL-based technology or fiber optic transport systems. It will include a 4-wire DS1 Network Interface at the End User's location. For purposes of this Agreement, including the transition of DS1 and DS3 Loops described in Section 2.1.4 above, DS1 Loops include 2-wire and 4-wire copper Loops capable of providing high-bit rate digital subscriber line services, such as 2-wire and 4-wire HDSL Compatible Loops.

2.2.6.2 BellSouth shall not provide more than ten (10) unbundled DS1 Loops to Level 3 at any single building in which DS1 Loops are available as unbundled Loops.

2.2.7 4-wire Unbundled Digital/DS0 Loop. These are designed 4-wire Loops that may be configured as sixty-four (64)kbps, fifty-six (56)kbps, nineteen (19)kbps, and other sub-rate speeds associated with digital data services and will come standard with a test point, OC, and a DLR.

2.2.8 DS3 Loop. DS3 Loop is a two-point digital transmission path which provides for simultaneous two-way transmission of serial, bipolar, return-to-zero isochronous digital electrical signals at a transmission rate of forty-four point seven thirty-six (44.736) megabits per second (Mbps) that is dedicated to the use of the ordering CLEC in its provisioning of local exchange and associated exchange access services. It may provide transport for twenty-eight (28) DS1 channels, each of which provides the digital equivalent of twenty-four (24) analog voice grade channels. The interface to unbundled dedicated DS3 transport is a metallic-based electrical interface.

2.2.9 STS-1 Loop. STS-1 Loop is a high-capacity digital transmission path with SONET VT1.5 mapping that is dedicated for the use of the ordering customer for the purpose of provisioning local exchange and associated exchange access services. It is a two-point digital transmission path which provides for simultaneous two-way transmission of serial bipolar return-to-zero synchronous digital electrical signals at a transmission rate of fifty-one point eighty-four (51.84) Mbps. It may provide transport for twenty-eight (28) DS1 channels, each of which provides the digital equivalent of twenty-four (24) analog voice grade channels. The interface to unbundled dedicated STS-1 transport is a metallic-based electrical interface.

2.2.10 Both DS3 Loop and STS-1 Loop require a SI in order to ascertain availability.

2.2.11 DS3 services come with a test point and a DLR. Mileage is airline miles, rounded up and a minimum of one (1) mile applies. BellSouth's TR73501 LightGate®Service Interface and Performance Specifications, Issue D, June 1995 applies to DS3 services.

2.2.12 Level 3 may obtain a maximum of a single Unbundled DS3 Loop to any single building in which DS3 Loops are available as Unbundled Loops.

2.2.13 Fiber based Collocator

2.2.13.1 For purposes of this Amendment a "Fiber-Based Collocator" is, as defined in 47 C.F.R. § 51.5, any carrier, unaffiliated with BellSouth, that maintains a collocation arrangement in a BellSouth wire center, with active electrical power supply, and operates a fiber-optic cable or comparable transmission facility that (1) terminates at a collocation arrangement within the wire center; (2) leaves the BellSouth wire center premises; and (3) is owned by a party other than BellSouth or any affiliate of BellSouth.

2.2.13.2 For purposes of this definition: (i) carriers that have entered into merger and/or other consolidation agreements, or otherwise announced their intention to enter into the same, will be treated as affiliates and therefore as one collocator; provided however, in the case one of the parties to such merger or consolidation arrangement is BellSouth, then the other party's collocation arrangement shall not

be counted as a Fiber-Based Collocator, (ii) a Comparable transmission Facility means, at a minimum, the provision of transmission capacity equivalent to fiber-optic cable with a minimum point-to-point symmetrical data capacity exceeding 12 DS3s; (iii) the network of a Fiber-Based Collocator may only be counted once in making a determination of the number of Fiber-Based Collocators, notwithstanding that such single Fiber-Based Collocator leases its facilities to other collocators in a single wire center; provided, however, that a collocating carrier's dark fiber leased from an unaffiliated carrier may only be counted as a separate fiber-optic cable from the unaffiliated carrier's fiber if the collocating carrier obtains this dark fiber on an IRU basis.

2.3 Unbundled Loop Modifications (Line Conditioning)

2.3.1 Line Conditioning is defined as routine network modification that BellSouth regularly undertakes to provide xDSL services to its own customers. This may include the removal of any device, from a copper Loop or copper Subloop that may diminish the capability of the Loop or Subloop to deliver high-speed switched wireline telecommunications capability, including xDSL service. Such devices include, load coils, excessive bridged taps, low pass filters, and range extenders. Excessive bridged taps are bridged taps that serves no network design purpose and that are beyond the limits set according to industry standards and/or the BellSouth's TR73600 Unbundled Local Loop Technical Specification.

2.3.2 BellSouth will remove load coils only on copper Loops and Subloops that are less than eighteen thousand (18,000) feet in length.

2.3.3 For any copper loop being ordered by Level 3 which has over six thousand (6,000) feet of combined bridged tap will be modified, upon request from Level 3, so that the loop will have a maximum of six thousand (6,000) feet of bridged tap. This modification will be performed at no additional charge to Level 3. Loop conditioning orders that require the removal of bridged tap that serves no network design purpose on a copper Loop that will result in a combined total of bridged tap between two thousand five hundred (2,500) and six thousand (6,000) feet will be performed at the rates set forth in Exhibit A of Attachment 2 of the Agreement.

2.3.4 Level 3 may request removal of any unnecessary and non-excessive bridged tap (bridged tap between zero (0) and two thousand five hundred (2,500) feet which serves no network design purpose), at rates pursuant to BellSouth's SC Process as mutually agreed to by the Parties.

2.3.5 Rates for ULM are as set forth in Exhibit Exhibit A of Attachment 2 of the Agreement.

2.3.6 BellSouth will not modify a Loop in such a way that it no longer meets the technical parameters of the original Loop type (e.g., voice grade, ADSL, etc.) being ordered.

2.3.7 If Level 3 requests ULM on a reserved facility for a new Loop order, BellSouth may perform a pair change and provision a different Loop facility in lieu of the reserved facility with ULM if feasible. The Loop provisioned will meet or exceed specifications of the requested Loop facility as modified. Level 3 will not be charged for ULM if a different Loop is provisioned. For Loops that require a DLR or its equivalent, BellSouth will provide LMU detail of the Loop provisioned.

2.3.8 Level 3 shall request Loop make up information pursuant to this Attachment prior to submitting a service inquiry and/or a LSR for the Loop type that Level 3 desires BellSouth to condition.

2.3.9 When requesting ULM for a Loop that BellSouth has previously provisioned for Level 3, Level 3 will submit a SI to BellSouth. If a spare Loop facility that meets the Loop modification specifications requested by Level 3 is available at the location for which the ULM was requested, Level 3 will have the option to change the Loop facility to the qualifying spare facility rather than to provide ULM. In the event that BellSouth changes the Loop facility in lieu of providing ULM, Level 3 will not be charged for ULM but will only be charged the service order charges for submitting an order.

2.4 Subloop Elements.

2.4.1 Where facilities permit, BellSouth shall offer access to its Unbundled Subloop (USL) elements as specified herein.

2.4.2 Unbundled Subloop Distribution (USLD)

2.4.2.1 The USLD facility is a dedicated transmission facility that BellSouth provides from an End User's point of demarcation to a BellSouth cross-connect device. The BellSouth cross-connect device may be located within a remote terminal (RT) or a stand-alone cross-box in the field or in the equipment room of a building. The USLD media is a copper twisted pair that can be provisioned as a 2-wire or 4-wire facility. BellSouth will make available the following subloop distribution offerings where facilities exist:

USLD – Voice Grade (USLD-VG)
Unbundled Copper Subloop (UCSL)
USLD – Intrabuilding Network Cable (USLD-INC (aka riser cable))

2.4.2.2 USLD-VG is a copper subloop facility from the cross-box in the field up to and including the point of demarcation at the End User's premises and may have load coils.

2.4.2.3 UCSL is a copper facility eighteen thousand (18,000) feet or less in length provided from the cross-box in the field up to and including the End User's point

of demarcation. If available, this facility will not have any intervening equipment such as load coils between the End User and the cross-box.

2.4.2.3.1 If Level 3 requests a UCSL and it is not available, Level 3 may request the copper Subloop facility be modified pursuant to the ULM process to remove load coils and/or excessive bridged taps. If load coils and/or excessive bridged taps are removed, the facility will be classified as a UCSL.

2.4.2.4 USLD-INC is the distribution facility owned or controlled by BellSouth inside a building or between buildings on the same property that is not separated by a public street or road. USLD-INC includes the facility from the cross-connect device in the building equipment room up to and including the point of demarcation at the End User's premises.

2.4.2.4.1 Upon request for USLD-INC from Level 3, BellSouth will install a cross-connect panel in the building equipment room for the purpose of accessing USLD-INC pairs from a building equipment room. The cross-connect panel will function as a single point of interconnection (SPOI) for USLD-INC and will be accessible by multiple carriers as space permits. BellSouth will place cross-connect blocks in twenty five (25) pair increments for Level 3's use on this cross-connect panel. Level 3 will be responsible for connecting its facilities to the twenty five (25) pair cross-connect block(s).

2.4.2.5 For access to Voice Grade USLD and UCSL, Level 3 shall install a cable to the BellSouth cross-box pursuant to the terms and conditions for physical collocation for remote sites set forth in Attachment 4. This cable would be connected by a BellSouth technician within the BellSouth cross-box during the set-up process. Level 3's cable pairs can then be connected to BellSouth's USL within the BellSouth cross-box by the BellSouth technician.

2.4.2.6 Through the SI process, BellSouth will determine whether access to USLs at the location requested by Level 3 is technically feasible and whether sufficient capacity exists in the cross-box. If existing capacity is sufficient to meet Level 3's request, then BellSouth will perform the site set-up as described in the CLEC Information Package, located at BellSouth's Interconnection Web site: www.interconnection.bellsouth.com/products/html/unes.html.

2.4.2.7 The site set-up must be completed before Level 3 can order Subloop pairs. For the site set-up in a BellSouth cross-connect box in the field, BellSouth will perform the necessary work to splice Level 3's cable into the cross-connect box. For the site set-up inside a building equipment room, BellSouth will perform the necessary work to install the cross-connect panel and the connecting block(s) that will be used to provide access to the requested USLs.

2.4.2.8 Once the site set-up is complete, Level 3 will request Subloop pairs through submission of a LSR form to the LCSC. OC is required with USL pair

provisioning when Level 3 requests reuse of an existing facility, and the OC charge shall be billed in addition to the USL pair rate. For expedite requests by Level 3 for Subloop pairs, expedite charges will apply for intervals less than five (5) days.

2.4.2.9 USLs will be provided in accordance with BellSouth's TR73600 Unbundled Local Loop Technical Specifications.

2.4.3 Unbundled Network Terminating Wire (UNTW)

2.4.3.1 UNTW is unshielded twisted copper wiring that is used to extend circuits from an intra-building network cable terminal or from a building entrance terminal to an individual End User's point of demarcation. It is the final portion of the Loop that in multi-subscriber configurations represents the point at which the network branches out to serve individual subscribers.

2.4.3.2 This element will be provided in MDUs and/or Multi-Tenants Units (MTUs) where either Party owns wiring all the way to the End User's premises. Neither Party will provide this element in locations where the property owner provides its own wiring to the End User's premises, where a third party owns the wiring to the End User's premises.

2.4.3.3 Requirements

2.4.3.3.1 On a multi-unit premises, upon request of the other Party (Requesting Party), the Party owning the network terminating wire (Provisioning Party) will provide access to UNTW pairs on an Access Terminal that is suitable for use by multiple carriers at each Garden Terminal or Wiring Closet.

2.4.3.3.2 The Provisioning Party shall not be required to install new or additional NTW beyond existing NTW to provision the services of the Requesting Party.

2.4.3.3.3 In existing MDUs and/or MTUs in which BellSouth does not own or control wiring (INC/NTW) to the End Users premises, and Level 3 does own or control such wiring, Level 3 will install UNTW Access Terminals for BellSouth under the same terms and conditions as BellSouth provides UNTW Access Terminals to Level 3.

2.4.3.3.4 In situations in which BellSouth activates a UNTW pair, BellSouth will compensate Level 3 for each pair activated commensurate to the price specified in Level 3's Agreement.

2.4.3.3.5 Upon receipt of the UNTW SI requesting access to the Provisioning Party's UNTW pairs at a multi-unit premises, representatives of both Parties will participate in a meeting at the site of the requested access. The purpose of the site visit will include discussion of the procedures for installation and location of the Access Terminals. By request of the Requesting Party, an Access Terminal will be

installed either adjacent to each of the Provisioning Party's Garden Terminal or inside each Wiring Closet. The Requesting Party will deliver and connect its central office facilities to the UNTW pairs within the Access Terminal. The Requesting Party may access any available pair on an Access Terminal. A pair is available when a pair is not being utilized to provide service or where the End User has requested a change in its local service provider to the Requesting Party. Prior to connecting the Requesting Party's service on a pair previously used by the Provisioning Party, the Requesting Party is responsible for ensuring the End User is no longer using the Provisioning Party's service or another CLEC's service before accessing UNTW pairs.

2.4.3.3.6 Access Terminal installation intervals will be established on an individual case basis.

2.4.3.3.7 The Requesting Party is responsible for obtaining the property owner's permission for the Provisioning Party to install an Access Terminal(s) on behalf of the Requesting Party. The submission of the SI by the Requesting Party will serve as certification by the Requesting Party that such permission has been obtained. If the property owner objects to Access Terminal installations that are in progress or within thirty (30) days after completion and demands removal of Access Terminals, the Requesting Party will be responsible for costs associated with removing Access Terminals and restoring the property to its original state prior to Access Terminals being installed.

2.4.3.3.8 The Requesting Party shall indemnify and hold harmless the Provisioning Party against any claims of any kind that may arise out of the Requesting Party's failure to obtain the property owner's permission. The Requesting Party will be billed for nonrecurring and recurring charges for accessing UNTW pairs at the time the Requesting Party activates the pair(s). The Requesting Party will notify the Provisioning Party within five (5) business days of activating UNTW pairs using the LSR form.

2.4.3.3.9 If a trouble exists on a UNTW pair, the Requesting Party may use an alternate spare pair that serves that End User if a spare pair is available. In such cases, the Requesting Party will re-terminate its existing jumper from the defective pair to the spare pair. Alternatively, the Requesting Party will isolate and report troubles in the manner specified by the Provisioning Party. The Requesting Party must tag the UNTW pair that requires repair. If the Provisioning Party dispatches a technician on a reported trouble call and no UNTW trouble is found, the Provisioning Party will charge Requesting Party for time spent on the dispatch and testing the UNTW pair(s).

2.4.3.3.10 If the Requesting Party initiates the Access Terminal installation and the Requesting Party has not activated at least ten percent (10%) of the capacity of the Access Terminal installed pursuant to the Requesting Party's request for an Access Terminal within six (6) months of installation of the Access Terminal, the

Provisioning Party will bill the Requesting Party a nonrecurring charge equal to the actual cost of provisioning the Access Terminal.

2.4.3.3.11 If the Provisioning Party determines that the Requesting Party is using the UNTW pairs without reporting the activation of the pairs, the Requesting Party will be billed for the use of that pair back to the date the End User began receiving service from the Requesting Party at that location. Upon request, the Requesting Party will provide copies of its billing record to substantiate such date. If the Requesting Party fails to provide such records, then the Provisioning Party will bill the Requesting Party back to the date of the Access Terminal installation.

2.4.4 Dark Fiber Loop

2.4.4.1 Dark Fiber Loop is an unused optical transmission facility, without attached signal regeneration, multiplexing, aggregation or other electronics, from the demarcation point at an End User's premises to the End User's serving wire center. Dark Fiber Loops may be strands of optical fiber existing in aerial or underground structure. BellSouth will not provide line terminating elements, regeneration or other electronics necessary for Level 3 to utilize Dark Fiber Loops.

2.4.4.2 Transition for Dark Fiber Loop

2.4.4.2.1 For purposes of this Section 2.4.4, the Transition Period for Dark Fiber Loops is the eighteen (18) month period beginning March 11, 2005 and ending September 10, 2006.

2.4.4.2.2 For purposes of this Section 2.4.4, Embedded Base means Dark Fiber Loops that were in service for Level 3 as of March 10, 2005. ***For the state of South Carolina, during the Transition Period <customer_short_name>> shall be entitled to order and BellSouth shall provision moves, changes and additions of and to Dark Fiber Loops that Level 3 orders for the purpose of serving CLEC's existing Dark Fiber Loop End Users as of March 10, 2005, at such End Users' new or existing physical locations, and such facilities shall be included in the Embedded Base.*** Subsequent disconnects or loss of End Users shall be removed from the Embedded Base.

2.4.4.3 During the Transition Period only, BellSouth shall make available for the Embedded Base Dark Fiber Loops for Level 3 at the terms and conditions set forth in this Attachment.

2.4.4.4 Notwithstanding the Effective Date of this Agreement, the rates for Level 3's Embedded Base of Dark Fiber Loops during the Transition Period shall be equal to the higher of 115% of the rate paid for that element on June 15, 2004 or 115% of a new rate the Commission establishes, if any, between June 16, 2004 and March 11, 2005. These rates shall be as set forth in Exhibit A to Attachment 2 of the Agreement and this Section 2.4.4.4.

2.4.4.5 The Transition Period shall apply only to Level 3's Embedded Base and Level 3 shall not add new Dark Fiber Loops pursuant to this Agreement.

2.4.4.6 Effective September 11, 2006, Dark Fiber Loops will no longer be made available pursuant to this Agreement.

2.4.4.7 No later than June 10, 2006 Level 3 shall submit spreadsheet(s) identifying all of the Embedded Base of circuits to be either disconnected or converted to other BellSouth services as Conversions pursuant to Section 1.3 above. The Parties shall negotiate a project schedule for the Conversion of the Embedded Base.

2.4.4.7.1 If Level 3 fails to submit the spreadsheet(s) specified in Section 2.4.4.7 above for all of its Embedded Base prior to June 10, 2006, BellSouth will identify Level 3's remaining Embedded Base, if any, and will transition such circuits to the equivalent tariffed BellSouth service(s). Those circuits identified and transitioned by BellSouth pursuant to this Section 2.4.4.7.1 shall be subject to all applicable disconnect charges as set forth in this Agreement and the full nonrecurring charges for installation of the equivalent tariffed BellSouth service as set forth in BellSouth's tariffs.

2.4.4.7.2 For Embedded Base circuits converted pursuant to Section 2.4.4.7 above or transitioned pursuant to Section 2.4.4.7.1 above, the applicable recurring tariff charge shall apply to each circuit as of the earlier of the date each circuit is converted or transitioned, as applicable, or September 11, 2006.

**3 Line Splitting**

3.1 Line splitting shall mean that a provider of data services (a Data LEC) and a provider of voice services (a Voice CLEC) to deliver voice and data service to End Users over the same Loop. The Voice CLEC and Data LEC may be the same or different carriers.

3.2 Line Splitting – UNE-L. In the event Level 3 provides its own switching or obtains switching from a third party, Level 3 may engage in line splitting arrangements with another CLEC using a splitter, provided by Level 3, in a Collocation Space at the central office where the loop terminates into a distribution frame or its equivalent.

3.3 Provisioning Line Splitting and Splitter Space – UNE-L

3.3.1 The Voice CLEC provides the splitter when providing Line Splitting with UNE-L. When Level 3 owns the splitter, Line Splitting requires the following: a loop from NID at the End User's location to the serving wire center and terminating into a distribution frame or its equivalent.

3.4 CLEC Provided Splitter – Line Splitting –UNE-L

3.4.1 To order High Frequency Spectrum on a particular Loop, Level 3 must have a DSLAM collocated in the central office that serves the End User of such Loop.

3.4.2 Level 3 may purchase, install and maintain central office POTS splitters in its collocation arrangements. Level 3 may use such splitters for access to its customers and to provide digital line subscriber services to its customers using the High Frequency Spectrum. Existing Collocation rules and procedures and the terms and conditions relating to Collocation set forth in Attachment 4-Central Office shall apply.

3.4.3 Any splitters installed by Level 3 in its collocation arrangement shall comply with ANSI T1.413, Annex E, or any future ANSI splitter Standards. Level 3 may install any splitters that BellSouth deploys or permits to be deployed for itself or any BellSouth affiliate.

3.5 Maintenance – Line Splitting – UNE-L

3.5.1 BellSouth will be responsible for repairing voice troubles and the troubles with the physical loop between the NID at the End User's premises and the termination point.

3.5.2 Level 3 shall indemnify, defend and hold harmless BellSouth from and against any claims, losses, actions, causes of action, suits, demands, damages, injury, and costs including reasonable attorney fees, which arise out of actions related to the other service provider, except to the extent caused by BellSouth's gross negligence or willful misconduct.

3.6 Line Sharing

3.6.1 General. Line Sharing is defined as the process by which Level 3 provides digital subscriber line service (xDSL) over the same copper Loop that BellSouth uses to provide retail voice service, with BellSouth using the low frequency portion of the Loop and Level 3 using the high frequency spectrum (as defined below) of the Loop.

3.6.2 Line Sharing arrangements in service as of October 1, 2003 under a prior Interconnection Agreement between BellSouth and Level 3, will remain in effect until the End User discontinues or moves xDSL service with Level 3. Arrangements pursuant to this Section will be billed at the rates set forth in Exhibit B.

3.6.3 No new Line Sharing arrangements may be ordered. For Line Sharing arrangements placed in service between October 2, 2003, and October 1, 2004; on

or after October 2, 2004 (whether under this Agreement only, or under this Agreement and a prior Agreement), the rates will be as set forth in Exhibit B.

3.6.4 Any Line Sharing arrangements placed in service between October 2, 2003 and October 1, 2004; on or after October 2, 2004; and not otherwise terminated, shall terminate on October 2, 2006.

3.6.5 The High Frequency Spectrum is defined as the frequency range above the voiceband on a copper Loop facility carrying analog circuit-switched voiceband transmissions. Access to the High Frequency Spectrum is intended to allow Level 3 the ability to provide xDSL data services to the End User for which BellSouth provides voice services. The High Frequency Spectrum shall be available for any version of xDSL complying with Spectrum Management Class 5 of ANSI T1.417, American National Standard for Telecommunications, Spectrum Management for Loop Transmission Systems. BellSouth will continue to have access to the low frequency portion of the Loop spectrum (from 300 Hertz to at least 3000 Hertz, and potentially up to 3400 Hertz, depending on equipment and facilities) for the purposes of providing voice service. Level 3 shall only use xDSL technology that is within the PSD mask for Spectrum Management Class 5 as found in the above-mentioned document.

3.6.6 Access to the High Frequency Spectrum requires an unloaded, 2-wire copper Loop. An unloaded Loop is a copper Loop with no load coils, low-pass filters, range extenders, DAMLs, or similar devices and minimal bridged taps consistent with ANSI T1.413 and T1.601.

3.6.7 BellSouth will provide Loop Modification to Level 3 on an existing Loop for Line Sharing in accordance with procedures as specified in Section 2 of this Attachment. BellSouth is not required to modify a Loop for access to the High Frequency spectrum if modification of that Loop significantly degrades BellSouth's voice service. If Level 3 requests that BellSouth modify a Loop and such modification significantly degrades the voice services on the Loop, Level 3 shall pay for the Loop to be restored to its original state.

3.6.8 Line Sharing shall only be available on loops on which BellSouth is also providing, and continues to provide, analog voice service directly to the End User. In the event the End User terminates its BellSouth provided voice service for any reason, or in the event BellSouth disconnects the End User's voice service pursuant to its tariffs or applicable law, and Level 3 desires to continue providing xDSL service on such Loop, Level 3 or the new voice provider, or both, shall be required to purchase a full stand-alone Loop. In those cases in which BellSouth no longer provides voice service to the End User and Level 3 purchases the full stand-alone Loop, Level 3 may elect the type of Loop it will purchase. Level 3 will pay the appropriate recurring and nonrecurring rates for such Loop as set forth in Exhibit A to this Attachment. In the event Level 3 purchases a voice grade Loop, Level 3 acknowledges that such Loop may not remain xDSL compatible.

3.6.9 In the event the End User terminates its BellSouth provided voice service, and Level 3 requests BellSouth to convert the Line Sharing arrangement to a Line Splitting arrangement (see below), BellSouth will discontinue billing Level 3 for the High Frequency Spectrum and begin billing the voice CLEC. BellSouth will continue to bill the Data LEC for all associated splitter charges if the Data LEC continues to use a BellSouth splitter.

3.6.10 Only one CLEC shall be permitted access to the High Frequency Spectrum of any particular Loop.

3.6.11 Once BellSouth has placed cross-connects on behalf of Level 3 to provide Level 3 access to the High Frequency Spectrum and chooses to rearrange its splitter or CLEC pairs, Level 3 may order the rearrangement of its splitter or cable pairs via "Subsequent Activity". Subsequent Activity is any rearrangement of Level 3's cable pairs or splitter ports after BellSouth has placed cross-connection to provide Level 3 access to the High Frequency Spectrum. BellSouth shall bill and Level 3 shall pay the Subsequent Activity charges as set forth in Exhibit B of this Attachment.

3.6.12 BellSouth's Local Ordering Handbook (LOH) will provide Level 3 the LSR format to be used when ordering disconnections of the High Frequency Spectrum or Subsequent Activity.

3.6.13 Maintenance and Repair – Line Sharing

3.6.13.1 Level 3 shall have access for repair and maintenance purposes to any Loop for which it has access to the High Frequency Spectrum. Level 3 may test from the collocation space, the Termination Point, or the NID.

3.6.13.2 BellSouth will be responsible for repairing voice services and the physical line between the NID at the End User's premises and the Termination Point. Level 3 will be responsible for repairing its data services. Each Party will be responsible for maintaining its own equipment.

3.6.13.3 Level 3 shall inform its End Users to direct data problems to Level 3, unless both voice and data services are impaired, in which event Level 3 should direct the End Users to contact BellSouth.

3.6.13.4 Once a Party has isolated a trouble to the other Party's portion of the Loop, the Party isolating the trouble shall notify the End User that the trouble is on the other Party's portion of the Loop.

## 4 Local Switching

4.1 Notwithstanding anything to the contrary in this Agreement, the services offered pursuant to this Section 4 are limited to DS0 level Local Switching and BellSouth is not required to provide Local Switching pursuant to this Agreement except as set forth in Section 4.2 below.

4.1.1 BellSouth shall not be required to unbundle local circuit switching for Level 3 for a particular End User when Level 3: (1) serves an End User with four (4) or more voice-grade (DS0) equivalents or lines served by BellSouth in Zone 1 of the following MSAs: Atlanta, GA; Miami, FL; Orlando, FL; Ft. Lauderdale, FL; Charlotte-Gastonia-Rock Hill, NC; Greensboro-Winston Salem-High Point, NC; Nashville, TN; and New Orleans, LA; or (2) serves an End User with a DS1 or higher capacity Loop in any service area covered by this Agreement. To the extent that Level 3 is serving any End User as described in (2) of this Section 4.1.1 as of the Effective Date of this Agreement, such End User's arrangement may not remain in place and such Arrangement must be terminated by Level 3 or transitioned by Level 3, or BellSouth shall disconnect such Arrangements upon thirty (30) days notice.

4.2 Transition for Local Switching

4.2.1 For purposes of this Section 4, the Transition Period for the Embedded Base of Local Switching is the twelve (12) month period beginning March 11, 2005 and ending March 10, 2006.

4.2.2 For the purposes of this Section 4, Embedded Base shall mean Local Switching and any additional elements that are required to be provided in conjunction therewith that were in service for Level 3 as of March 10, 2005. ***For the state of South Carolina, during the Transition Period CLEC shall be entitled to order and BellSouth shall provision Local Switching that CLEC orders for the purpose of serving CLEC's existing Local Switching End Users as of March 10, 2005, and such facilities shall be included in the Embedded Base.*** Subsequent disconnects or loss of End Users shall be removed from the Embedded Base.

4.2.3 During the Transition Period only, BellSouth shall make Local Switching available for the Embedded Base, in addition to all elements that are required to be provided in conjunction with Local Switching, at the rates, terms and conditions set forth in this Attachment. The Transition Period shall apply only to Level 3's Embedded Base and Level 3 shall not place new orders for Local Switching pursuant to this Agreement.

4.2.4 Notwithstanding the Effective Date of this Agreement, the rates for Level 3's Embedded Base of Local Switching during the Transition Period shall be equal to the higher of the rate at which during Level 3 leased that combination of elements on June 15, 2004, plus one dollar or the rate the Commission established, if any, between June 16, 2004, and the effective date of the TRRO, plus one dollar.

These rates shall be as set forth in Exhibit A to Attachment 2 of the Parties Agreement and this Section 4.2.4.

4.2.5 Level 3 must submit orders, to disconnect or convert all of its Embedded Base of Local Switching to other BellSouth services as Conversions pursuant to Section 1.6 above by October 1, 2005.

4.2.5.1 If Level 3 fails to submit orders to disconnect or convert all of its Embedded Base of Local Switching as specified in Section 4.2.5 above prior to October 1, 2005, BellSouth will identify Level 3's remaining Embedded Base of Local Switching and will disconnect such Local Switching. Those circuits identified and disconnected by BellSouth shall be subject to the applicable disconnect charges as set forth in this Agreement.

4.2.6 Effective March 11, 2006, Local Switching will no longer be made available pursuant to this Agreement.

4.3 Common (Shared) Transport

4.3.1 Notwithstanding any other provision of this Agreement, BellSouth will only provide unbundled access to Common (Shared) Transport to the extent BellSouth is required to provide and is providing Local Switching to Level 3.

**5 EEL Audits**

5.1 BellSouth may, on an annual basis, audit Level 3's records in order to verify compliance with the qualifying service eligibility criteria. The audit shall be conducted by a third party independent auditor, and the audit must be performed in accordance with the standards established by the American Institute for Certified Public Accountants (AICPA). To the extent the independent auditor's report concludes that Level 3 failed to comply with the service eligibility criteria, Level 3 must true-up any difference in payments, convert all noncompliant circuits to the appropriate service, and make the correct payments on a going-forward basis. In the event the auditor's report concludes that Level 3 did not comply in any material respect with the service eligibility criteria, Level 3 shall reimburse BellSouth for the cost of the independent auditor. To the extent the auditor's report concludes that Level 3 did comply in all material respects with the service eligibility criteria, BellSouth will reimburse Level 3 for its reasonable and demonstrable costs associated with the audit. Level 3 will maintain appropriate documentation to support its certifications.

5.2 In the event Level 3 converts special access services to UNEs, Level 3 shall be subject to the termination liability provisions in the applicable special access tariffs, if any.

5.3 UNE-P

5.3.1 DS0 Local Switching, as defined in Section 4 above, in combination with a Loop and Common (Shared) Transport provides local exchange service for the origination or termination of calls. UNE-P supports the same local calling and feature requirements as described in the Local Switching section of this Attachment and the ability to presubscribe to a primary carrier for intraLATA toll service and/or to presubscribe to a primary carrier for interLATA toll service.

5.3.2 Notwithstanding anything to the contrary in this Agreement, BellSouth is not required to provide UNE-P pursuant to this Agreement except as set forth in this Section 5.3.

5.3.3 Transition Period for UNE-P

5.3.3.1 For purposes of this Section 5.3, the Transition Period for UNE-P is the twelve (12) month period beginning March 11, 2005 and ending March 10, 2006.

5.3.3.2 ***For the purposes of this Section 5.3, Embedded Base shall mean UNE-P lines that were in service as of March 10, 2005. For the state South Carolina, during the Transition Period CLEC shall be entitled to order and BellSouth shall provision UNE-P that CLEC orders for the purpose of serving CLEC's existing UNE-P End Users as of March 10, 2005, and such facilities shall be included in the Embedded Base. Subsequent disconnects or loss of UNE-P by CLEC shall be removed from the Embedded Base.***

5.3.3.3 During the Transition Period only, BellSouth shall make UNE-P available for the Embedded Base, in addition to all elements that are required to be provided in conjunction with UNE-P, at the rates, terms and conditions set forth in this Attachment. The Transition Period shall apply only to Level 3's Embedded Base and Level 3 shall not place new orders for UNE-P pursuant to this Agreement.

5.3.3.4 Notwithstanding the Effective Date of this Agreement, the rates for Level 3's Embedded Base of UNE-P during the Transition Period shall be equal to the higher of the rate at which during Level 3 leased that combination of elements on June 15, 2004, plus one dollar or the rate the Commission established, if any, between June 16, 2004, and the effective date of the TRRO, plus one dollar. These rates shall be as set forth in Exhibit A to Attachment 2 of the Parties Agreement and this Section 5.3.3.4.

5.3.3.5 By October 1, 2005, Level 3 must submit orders or spreadsheets, or if migrating to UNE Loops must use the Bulk Migration process, as set forth in Attachment 2 of the Agreement to either disconnect or convert all of its Embedded Base of UNE-P to other BellSouth services.

5.3.3.5.1 If Level 3 fails to submit orders or spreadsheets converting all of the Embedded Base of UNE-P as specified in Section 5.3.3.5 above prior to October 1, 2005, BellSouth will identify Level 3's remaining Embedded Base of UNE-P and will transition such UNE-P to resold BellSouth telecommunication services, as set

forth in Attachment 1. Those circuits identified and transitioned by BellSouth shall be subject to the applicable disconnect charges as set forth in this Agreement and the full nonrecurring charges for installation of such BellSouth services as set forth in BellSouth's tariffs.

5.3.3.5.2 For Embedded Base UNE-P converted pursuant to Section 5.3.3.5 above or transitioned pursuant to Section 5.3.3.5. above, the applicable recurring tariff charges shall apply as of the earlier of the date each circuit is converted or transitioned, as applicable, or March 11, 2006.

5.3.3.6 Effective March 11, 2006, UNE-P will no longer be made available pursuant to this Agreement.

5.3.4 BellSouth shall make 911 updates in the BellSouth 911 database for Level 3's UNE-P. BellSouth will not bill Level 3 for 911 surcharges. Level 3 is responsible for paying all 911 surcharges to the applicable governmental agency.

**6 Dedicated Transport and Dark Fiber Transport**

6.1 Dedicated Transport. Dedicated Transport is defined as BellSouth's transmission facilities between wire centers or switches owned by BellSouth, or between wire centers or switches owned by BellSouth and switches owned by Level 3, including but not limited to DS1, DS3 and OCn level services, as well as dark fiber, dedicated to Level 3. BellSouth shall not be required to provide access to OCn level Dedicated Transport under any circumstances pursuant to this Agreement. In addition, except as set forth in Section 6.2 below, BellSouth shall not be required to provide to Level 3 unbundled access to interoffice transmission facilities that do not connect a pair of wire centers or switches owned by BellSouth ("Entrance Facilities").

6.2 Transition for DS1 and DS3 Dedicated Transport Including DS1 and DS3 Entrance Facilities

6.2.1 For purposes of this Section 6.2, the Transition Period for the Embedded Base of DS1 and DS3 Dedicated Transport, Embedded Base Entrance Facilities and for Excess DS1 and DS3 Dedicated Transport, is the twelve (12) month period beginning March 11, 2005 and ending March 10, 2006.

6.2.2 For purposes of this Section 6.2, Embedded Base means DS1 and DS3 Dedicated Transport that were in service for Level 3 as of March 10, 2005 in those wire centers that, as of such date, met the criteria set forth in Sections 6.2.6.1 or 6.2.6.2 below. ***For the state of South Carolina, during the Transition Period Level 3 shall be entitled to order and BellSouth shall provision moves, changes and additions of and to DS1 and DS3 Dedicated Transport that Level 3 orders for the purpose of serving CLEC's existing DS1 and DS3 Dedicated Transport End Users as of March 10, 2005, at such End Users' new or existing physical***

***locations, and such facilities shall be included in the Embedded Base.*** Subsequent disconnects or loss of End Users shall be removed from the Embedded Base.

6.2.3 For purposes of this Section 6, Embedded Base Entrance Facilities mean Entrance Facilities that were in service for Level 3 as of March 10, 2005. Subsequent disconnects or loss of customers shall be removed from the Embedded Base.

6.2.4 For purposes of this Section 6, Excess DS1 and DS3 Dedicated Transport mean those Level 3 DS1 and DS3 Dedicated Transport facilities in service as of March 10, 2005, in excess of the caps set forth in Section 6.6 below. Subsequent disconnects and loss of End Users shall be removed from Excess DS1 and DS3 Loops.

6.2.5 For purposes of this Section 6.2, a Business Line is as defined in 47 C.F.R. § 51.5.

6.2.6 Notwithstanding anything to the contrary in this Agreement, BellSouth shall make available Dedicated Transport as described in this Section 6.2 only for Level 3's Embedded Base ***and Excess Dedicated Transport*** during the Transition Period:

6.2.6.1 DS1 Dedicated Transport where both wire centers at the end points of the route contain 38,000 or more Business Lines or four (4) or more fiber-based collocators.

6.2.6.2 DS3 Dedicated Transport where both wire centers at the end points of the route contain 24,000 or more Business Lines or three (3) or more fiber-based collocators.

6.2.6.3 A list of wire centers meeting the criteria set forth in Sections 6.2.6.1 or 6.2.6.2 above as of March 10, 2005, as ordered by the Public Service Commission of South Carolina in Docket No. 2004-316-C (Initial Wire Center List), is attached to BellSouth's Carrier Notification Letter SN91086058, dated March 20, 2006, which is available on BellSouth's Interconnection Services Web site.

6.2.6.4 Notwithstanding anything to the contrary in this Agreement, BellSouth shall make available Entrance Facilities only for <Level 3's Embedded Base Entrance Facilities and only during the Transition Period.

6.2.6.5 Notwithstanding the Effective Date of this Agreement, during the Transition Period, the rates for Level 3's Embedded Base of DS1 and DS3 Dedicated Transport, Level 3's Excess DS1 and DS3 Dedicated Transport, and Level 3's Embedded Base Entrance Facilities as described in this Section 6.2, shall be equal to the higher of 115% of the rate paid for that element on June 15, 2004 or 115% of a new rate the Commission establishes, if any, between June 16, 2004 and March 11, 2005. These rates shall be as set forth in Exhibit A to Attachment 2 of the Agreement and this Section 6.2.6.5.

6.2.6.6 The Transition Period shall apply only to (1) Level 3's Embedded Base and Embedded Base Entrance Facilities; and (2) Level 3's Excess DS1 and DS3 Dedicated Transport. Level 3 shall not add new Entrance Facilities pursuant to this Agreement. Further, Level 3 shall not add new DS1 or DS3 Dedicated Transport as described in this Section 6.2 pursuant to this Agreement, except pursuant to the self-certification process as set forth in Section 1.5 above of and as set forth in Section 6.2.6.10 below.

6.2.6.7 Once a wire center exceeds either of the thresholds set forth in Section 6.2.6.1 above, no future DS1 Dedicated Transport unbundling will be required in that wire center.

6.2.6.8 Once a wire center exceeds either of the thresholds set forth in Section 6.2.6.2 above, no future DS3 Dedicated Transport will be required in that wire center.

6.2.6.9 No later than December 9, 2005 Level 3 shall submit spreadsheet(s) identifying all of the Embedded Base of circuits, Embedded Base Entrance Facilities, and Excess DS1 and DS3 Dedicated Transport to be either disconnected or converted to other BellSouth services pursuant to Section 1.3 above. The Parties shall negotiate a project schedule for the Conversion of the Embedded Base, Embedded Base Entrance Facilities and Excess DS1 and DS3 Dedicated Transport.

6.2.6.9.1 If Level 3 fails to submit the spreadsheet(s) specified in Section 6.2.6.9 above for all of its Embedded Base, Embedded Base Entrance Facilities and Excess DS1 and DS3 Dedicated Transport prior to December 9, 2005, BellSouth will identify Level 3's remaining Embedded Base, Embedded Base Entrance Facilities and Excess DS1 and DS3 Dedicated Transport, if any, and will transition such circuits to the equivalent tariffed BellSouth service(s). Those circuits identified and transitioned by BellSouth pursuant to this Section 6.2.6.9.1 shall be subject to all applicable disconnect charges as set forth in this Agreement and the full nonrecurring charges for installation of the equivalent tariffed BellSouth service as set forth in BellSouth's tariffs.

6.2.6.9.2 For Embedded Base circuits, Embedded Base Entrance Facilities and Excess DS1 and DS3 Dedicated Transport converted pursuant to Section 6.2.6.9 or transitioned pursuant to Section 6.2.6.9.1 above, the applicable recurring tariff charge shall apply to each circuit as of the earlier of the date each circuit is converted or transitioned, as applicable, or March 11, 2006.

6.2.6.10 <u>Modifications and Updates to the Wire Center List and Subsequent Transition Periods</u>

6.2.6.10.1 In the event BellSouth identifies additional wire centers that meet the criteria set forth in Sections 6.2.6.1 or 6.2.6.2 above, but that were not included in the Initial Wire Center List, BellSouth shall include such additional wire centers in CNL.

Each such list of additional wire centers shall be considered a Subsequent Wire Center List.

6.2.6.10.2 Effective ten (10) business days after the date of a BellSouth CNL providing a Subsequent Wire Center List, BellSouth shall not be required to provide DS1 and DS3 Dedicated Transport, as applicable, in such additional wire center(s), except pursuant to the self-certification process as set forth in Section 1.5 above.

6.2.6.10.3 For purposes of Section 6.2.6.10 above, BellSouth shall make available DS1 and DS3 Dedicated Transport that was in service for Level 3 in a wire center on the Subsequent Wire Center List as of the tenth ($10^{th}$) business day after the date of BellSouth's CNL identifying the Subsequent Wire Center List (Subsequent Embedded Base) until ninety (90) days after the tenth (10th) business day from the date of BellSouth's CNL identifying the Subsequent Wire Center List (Subsequent Transition Period).

6.2.6.10.4 Subsequent disconnects or loss of End Users shall be removed from the Subsequent Embedded Base.

6.2.6.10.5 The rates set forth in Exhibit A of Attachment 2 of the Agreement plus 15% shall apply to the Subsequent Embedded Base during the Subsequent Transition Period.

6.2.6.10.6 No later than forty (40) days from BellSouth's CNL identifying the Subsequent Wire Center List Level 3 shall submit a spreadsheet(s) identifying the Subsequent Embedded Base of circuits to be disconnected or converted to other BellSouth services. The Parties shall negotiate a project schedule for the Conversion of the Subsequent Embedded Base.

6.2.6.10.6.1 If Level 3 fails to submit the spreadsheet(s) specified in Section 6.2.6.10.6 above for all of its Subsequent Embedded Base within forty (40) days after the date of BellSouth's CNL identifying the Subsequent Wire Center List, BellSouth will identify Level 3's remaining Subsequent Embedded Base, if any, and will transition such circuits to the equivalent tariffed BellSouth service(s). Those circuits identified and transitioned by BellSouth shall be subject to the applicable disconnect charges as set forth in this Agreement and the full nonrecurring charges for installation of the equivalent tariffed BellSouth service as set forth in BellSouth's tariffs.

6.2.6.10.7 For Subsequent Embedded Base circuits converted pursuant to Section 6.2.6.10.6 above or transitioned pursuant to Section 6.2.6.10.6.1 above, the applicable recurring tariff charges shall apply as of the earlier of the date each circuit is converted or transitioned, as applicable, or the first day after the end of the Subsequent Transition Period.

6.3 BellSouth shall:

6.3.1 Provide Level 3 exclusive use of Dedicated Transport to a particular customer or carrier;

6.3.2 Provide all technically feasible features, functions, and capabilities of Dedicated Transport as outlined within the technical requirements of this section;

6.3.3 Permit, to the extent technically feasible, Level 3 to connect Dedicated Transport to equipment designated by Level 3, including but not limited to, Level 3's collocated facilities; and

6.3.4 Permit, to the extent technically feasible, Level 3 to obtain the functionality provided by BellSouth's digital cross-connect systems.

6.4 BellSouth shall offer Dedicated Transport:

6.4.1 As capacity on a shared facility; and

6.4.2 As a circuit (i.e., DS0, DS1, DS3, STS-1) dedicated to Level 3.

6.5 Dedicated Transport may be provided over facilities such as optical fiber, copper twisted pair, and coaxial cable, and shall include transmission equipment such as line terminating equipment, amplifiers, and regenerators.

6.6 ***Level 3 may obtain a maximum of twelve (12) unbundled DS3 Dedicated Transport circuits on each route where DS3 Dedicated Transport is available as a Network Element, and a maximum of ten (10) unbundled DS1 Dedicated Transport circuits on each Route where there is no 251(c)(3) unbundling obligation for DS3 Dedicated Transport but for which impairment exists for DS1 Dedicated Transport.*** A route is defined as a transmission path between one of BellSouth's wire centers or switches and another of BellSouth's wire centers or switches. A route between two (2) points may pass through one or more intermediate wire centers or switches. Transmission paths between identical end points are the same "route", irrespective of whether they pass through the same intermediate wire centers or switches, if any.

6.7 Technical Requirements

6.7.1 BellSouth shall offer DS0 equivalent interface transmission rates for DS0 or voice grade Dedicated Transport. For DS1 or DS3 circuits, Dedicated Transport shall at a minimum meet the performance, availability, jitter, and delay requirements specified for Customer Interface to Central Office (CI to CO) connections in the applicable industry standards.

6.7.2 BellSouth shall offer the following interface transmission rates for Dedicated Transport:

6.7.2.1 DS0 Equivalent;

6.7.2.2 DS1;

6.7.2.3 DS3;

6.7.2.4 STS-1; and

6.7.2.5 SDH (Synchronous Digital Hierarchy) Standard interface rates are in accordance with International Telecommunications Union (ITU) Recommendation G.707 and Plesiochronous Digital Hierarchy (PDH) rates per ITU Recommendation G.704.

6.7.3 BellSouth shall design Dedicated Transport according to its network infrastructure. Level 3 shall specify the termination points for Dedicated Transport.

6.7.4 At a minimum, Dedicated Transport shall meet each of the requirements set forth in the applicable industry technical references and BellSouth Technical References;

6.7.4.1 Telcordia TR-TSY-000191 Alarm Indication Signals Requirements and Objectives, Issue 1, May 1986.

6.7.4.2 BellSouth's TR73501 LightGate®Service Interface and Performance Specifications, Issue D, June 1995.

6.7.4.3 BellSouth's TR73525 MegaLink®Service, MegaLink Channel Service and MegaLink Plus Service Interface and Performance Specifications, Issue C, May 1996.

6.8 Dark Fiber Transport. Dark Fiber Transport is defined as Dedicated Transport that consists of unactivated optical interoffice transmission facilities without attached signal regeneration, multiplexing, aggregation or other electronics. Except as set forth in Section 6.8.1 below, BellSouth shall not be required to provide access to Dark Fiber Transport Entrance Facilities pursuant to this Agreement.

6.8.1 Transition for Dark Fiber Transport and Dark Fiber Transport Entrance Facilities

6.8.1.1 For purposes of this Section 6.8, the Transition Period for the Embedded Base of Dark Fiber Transport is the eighteen (18) month period beginning March 11, 2005 and ending September 10, 2006.

6.8.1.2 For purposes of this Section 6.8, Embedded Base means Dark Fiber Transport that was in service for Level 3 as of March 10, 2005 in those wire centers that, as of such date, met the criteria set forth in 6.8.1.4.1. ***For the state of South Carolina, during the Transition Period Level 3 shall be entitled to order and BellSouth shall provision moves, changes and additions of and to Dark Fiber***

***Transport that Level 3 orders for the purpose of serving CLEC's existing Dark Fiber Transport End Users as of March 10, 2005, at such End Users' new or existing physical locations, and such facilities shall be included in the Embedded Base.*** Subsequent disconnects or loss of End Users shall be removed from the Embedded Base.

6.8.1.3 For purposes of this Section 6.8, a Business Line is as defined in 47 C.F.R. § 51.5.

6.8.1.4 Notwithstanding anything to the contrary in this Agreement, BellSouth shall make available Dark Fiber Transport as described in this Section 6.8 only for Level 3's Embedded Base during the Transition Period:

6.8.1.4.1 Dark Fiber Transport where both wire centers at the end points of the route contain twenty-four thousand (24,000) or more Business Lines or three (3) or more fiber-based collocators.

6.8.1.5 A list of wire centers meeting the criteria set forth in Section 6.8.1.4 above as of March 10, 2005, ("Initial List") as ordered by the Public Service Commission of South Carolina in Docket No. 2004-316-C (Initial Wire Center List), is attached to BellSouth's Carrier Notification Letter SN91086058, dated March 20, 2006, which is available on BellSouth's Interconnection Services Web site.

6.8.1.6 Notwithstanding the Effective Date of this Agreement, during the Transition Period, the rates for Level 3's Embedded Base of Dark Fiber Transport and Level 3's Embedded Base of Dark Fiber Transport Entrance Facilities as described in Section 6.8.1.2 above shall be equal to the higher of 115% of the rate paid for that element on June 15, 2004 or 115% of a new rate the Commission establishes, if any, between June 16, 2004 and March 11, 2005. These rates shall be as set forth in Exhibit A Attachment 2 of the Agreement and this Section 6.8.1.6.

6.8.1.7 The Transition Period shall apply only to Level 3's Embedded Base of Dark Fiber Transport and Dark Fiber Entrance Facilities. Level 3 shall not add new Dark Fiber Transport as described in this Section 6.8 except pursuant to the self-certification process as set forth in Section 1.5 of this Attachment and as set forth in Section 6.8.1.10 below. Further, Level 3 shall not add new Dark Fiber Entrance Facilities pursuant to this Agreement.

6.8.1.8 Once a wire center exceeds either of the thresholds set forth in this Section 6.8.1.4 above, no future Dark Fiber Transport unbundling will be required in that wire center.

6.8.1.9 No later than June 10, 2006 Level 3 shall submit spreadsheet(s) identifying all of the Embedded Base of Dark Fiber Transport and Dark Fiber Entrance Facilities to be either disconnected or converted to other BellSouth services as Conversions pursuant to Section 1.3 above. The Parties shall negotiate a project schedule for the Conversion of the Embedded Base.

6.8.1.9.1 If Level 3 fails to submit the spreadsheet(s) specified in Section 6.8.1.9 above for all of its Embedded Base prior to June 10, 2006, BellSouth will identify Level 3's remaining Embedded Base, if any, and will transition such circuits to the equivalent tariffed BellSouth service(s). Those circuits identified and transitioned by BellSouth pursuant to this Section 6.8.1.9.1 shall be subject to all applicable disconnect charges as set forth in this Agreement and the full nonrecurring charges for installation of the equivalent tariffed BellSouth service as set forth in BellSouth's tariffs.

6.8.1.9.2 For Embedded Base circuits converted pursuant to Section 6.8.1.9 above or transitioned pursuant to Section 6.8.1.9.1 above, the applicable recurring tariff charge shall apply to each circuit as of the earlier of the date each circuit is converted or transitioned, as applicable, or September 11, 2006.

6.8.1.10 Modifications and Updates to the Wire Center List and Subsequent Transition Periods

6.8.1.10.1 In the event BellSouth identifies additional wire centers that meet the criteria set forth in Section 6.8.1.4.1 above, but that were not included in the Initial Wire Center List, BellSouth shall include such additional wire centers in a CNL. Each such list of additional wire centers shall be considered a "Subsequent Wire Center List".

6.8.1.10.2 Effective ten (10) business days after the date of a BellSouth CNL providing a Subsequent Wire Center List, BellSouth shall not be required to provide unbundled access to Dark Fiber Transport, as applicable, in such additional wire center(s), except pursuant to the self-certification process as set forth in Section 1.5 above.

6.8.1.10.3 For purposes of Section 6.8.1.10, BellSouth shall make available Dark Fiber Transport that were in service for Level 3 in a wire center on the Subsequent Wire Center List as of the tenth ($10^{th}$) business day after the date of BellSouth's CNL identifying the Subsequent Wire Center List (Subsequent Embedded Base) until ninety (90) days after the tenth (10th) business day from the date of BellSouth's CNL identifying the Subsequent Wire Center List (Subsequent Transition Period).

6.8.1.10.4 Subsequent disconnects or loss of End Users shall be removed from the Subsequent Embedded Base.

6.8.1.10.5 The rates set forth in Exhibit A of Attachment 2 of the Agreement plus 15% shall apply to the Subsequent Embedded Base during the Subsequent Transition Period.

6.8.1.10.6 No later than forty (40) days from BellSouth's CNL identifying the Subsequent Wire Center List Level 3 shall submit a spreadsheet(s) identifying the Subsequent Embedded Base of circuits to be disconnected or converted to other BellSouth

services. The Parties shall negotiate a project schedule for the Conversion of the Subsequent Embedded Base.

6.8.1.10.6.1 If Level 3 fails to submit the spreadsheet(s) specified in Section 6.8.1.10.6 above for all of its Subsequent Embedded Base within forty (40) days after the date of BellSouth's CNL identifying the Subsequent Wire Center List, BellSouth will identify Level 3's remaining Subsequent Embedded Base, if any, and will transition such circuits to the equivalent tariffed BellSouth service(s). Those circuits identified and transitioned by BellSouth shall be subject to the applicable disconnect charges as set forth in this Agreement and the full nonrecurring charges for installation of the equivalent tariffed BellSouth service as set forth in BellSouth's tariffs.

6.8.1.10.6.2 For Subsequent Embedded Base circuits converted pursuant to Section 6.8.1.10.6 above or transitioned pursuant to Section 6.8.1.10.6.1 above, the applicable recurring tariff charges shall apply as of the earlier of the date each circuit is converted or transitioned, as applicable, or the first day after the end of the Subsequent Transition Period.

## 7 Call Related Databases and Signaling

7.1 Call Related Databases are the databases other than OSS, that are used in signaling networks, for billing and collection, or the transmission, routing or other provision of a Telecommunications Service. Notwithstanding anything to the contrary herein, BellSouth shall only provide unbundled access to call related databases and signaling including but not limited to, BellSouth Switched Access 8XX Toll Free Dialing Ten Digit Screening Service, LIDB, Signaling, Signaling Link Transport, STP, SS7 AIN Access, Service Control Point(SCP\Databases, Local Number Portability (LNP) Databases and Calling Name (CNAM) Database Service pursuant to this Agreement where BellSouth is required to provide and is providing Local Switching or UNE-P to Level 3 pursuant to this Agreement.

7.1.1 Such unbundled access is only available until March 10, 2006.

7.2 <u>BellSouth Switched Access (SWA) 8XX Toll Free Dialing Ten Digit Screening Service</u>

7.2.1 The BellSouth SWA 8XX Toll Free Dialing Ten Digit Screening Service database (8XX SCP Database) is a SCP that contains customer record information and the functionality to provide call-handling instructions for 8XX calls. The 8XX SCP IN software stores data downloaded from the national SMS/8XX database and provides the routing instructions in response to queries from the SSP or tandem. The BellSouth SWA 8XX Toll Free Dialing Ten Digit Screening Service (8XX TFD Service) utilizes the 8XX SCP Database to provide identification and routing

of the 8XX calls, based on the ten digits dialed. At Level 3's option, 8XX TFD Service is provided with or without POTS number delivery, dialing number delivery, and other optional complex features as selected by Level 3.

7.2.2 The 8XX SCP Database is designated to receive and respond to queries using the ANSI Specification of SS7 protocol.

7.3 LIDB

7.3.1 LIDB is a transaction-oriented database accessible through Common Channel Signaling (CCS) networks. For access to LIDB, Level 3 must purchase appropriate signaling links pursuant to Section 7.4 below. LIDB contains records associated with End User Line Numbers and Special Billing Numbers. LIDB accepts queries from other Network Elements and provides appropriate responses. The query originator need not be the owner of LIDB data. LIDB queries include functions such as screening billed numbers that provides the ability to accept Collect or Third Number Billing calls and validation of Telephone Line Number based non-proprietary calling cards. The interface for the LIDB functionality is the interface between BellSouth's CCS network and other CCS networks. LIDB also interfaces to administrative systems.

7.3.2 Technical Requirements

7.3.2.1 BellSouth will offer to Level 3 any additional capabilities that are developed for LIDB during the life of this Agreement.

7.3.2.2 BellSouth shall process Level 3's customer records in LIDB at least at parity with BellSouth customer records, with respect to other LIDB functions. BellSouth shall indicate to Level 3 what additional functions (if any) are performed by LIDB in the BellSouth network.

7.3.2.3 Within two (2) weeks after a request by Level 3, BellSouth shall provide Level 3 with a list of the customer data items, which Level 3 would have to provide in order to support each required LIDB function. The list shall indicate which data items are essential to LIDB function and which are required only to support certain services. For each data item, the list shall show the data formats, the acceptable values of the data item and the meaning of those values.

7.3.2.4 BellSouth shall provide LIDB systems for which operating deficiencies that would result in calls being blocked shall not exceed thirty (30) minutes per year.

7.3.2.5 BellSouth shall provide LIDB systems for which operating deficiencies that would not result in calls being blocked shall not exceed twelve (12) hours per year.

7.3.2.6 BellSouth shall provide LIDB systems for which the LIDB function shall be in overload no more than twelve (12) hours per year.

7.3.2.7 All additions, updates and deletions of Level 3 data to the LIDB shall be solely at the direction of Level 3. Such direction from Level 3 will not be required where the addition, update or deletion is necessary to perform standard fraud control measures (e.g., calling card auto-deactivation).

7.3.2.8 BellSouth shall provide priority updates to LIDB for Level 3 data upon Level 3's request (e.g., to support fraud detection)**,** via password-protected telephone card, facsimile, or electronic mail within one hour of notice from the established BellSouth contact.

7.3.2.9 BellSouth shall provide LIDB systems such that no more than 0.01% of Level 3 customer records will be missing from LIDB, as measured by Level 3 audits. BellSouth will audit Level 3 records in LIDB against Data Base Administration System (DBAS) to identify record mismatches and provide this data to a designated Level 3 contact person to resolve the status of the records and BellSouth will update system appropriately. BellSouth will refer record of mismatches to Level 3 within one (1) business day of audit. Once reconciled records are received back from Level 3, BellSouth will update LIDB the same business day if less than five hundred (500) records are received before 1:00 p.m. Central Time. If more than five hundred (500) records are received, BellSouth will contact Level 3 to negotiate a time frame for the updates, not to exceed three (3) business days.

7.3.2.10 BellSouth shall perform backup and recovery of all of Level 3's data in LIDB including sending to LIDB all changes made since the date of the most recent backup copy, in at least the same time frame BellSouth performs backup and recovery of BellSouth data in LIDB for itself. Currently, BellSouth performs backups of the LIDB for itself on a weekly basis; and when a new software release is scheduled, a backup is performed prior to loading the new release.

7.3.2.11 BellSouth shall provide Level 3 with LIDB reports of data which are missing or contain errors, as well as any misrouted errors, within a reasonable time period as negotiated between Level 3 and BellSouth.

7.3.2.12 BellSouth shall prevent any access to or use of Level 3 data in LIDB by BellSouth personnel that are outside of established administrative and fraud control personnel, or by any other Party that is not authorized by Level 3 in writing.

7.3.2.13 BellSouth shall provide Level 3 performance of the LIDB Data Screening function, which allows a LIDB to completely or partially deny specific query originators access to LIDB data owned by specific data owners, for Customer Data that is part of an NPA-NXX or RAO-0/1XX wholly or partially owned by Level 3 at least at parity with BellSouth Customer Data. BellSouth shall obtain from Level 3 the screening information associated with LIDB Data Screening of Level 3 data in accordance with this requirement. BellSouth currently does not have LIDB Data Screening capabilities. When such capability is available,

BellSouth shall offer it to Level 3 under the BFR/NBR Process as set forth in Attachment 11.

7.3.2.14 BellSouth shall accept queries to LIDB associated with Level 3 customer records and shall return responses in accordance with industry standards.

7.3.2.15 BellSouth shall provide mean processing time at the LIDB within 0.50 seconds under normal conditions as defined in industry standards.

7.3.2.16 BellSouth shall provide processing time at the LIDB within one (1) second for ninety-nine percent (99%) of all messages under normal conditions as defined in industry standards.

7.3.3 Interface Requirements

7.3.3.1 BellSouth shall offer LIDB in accordance with the requirements of this subsection.

7.3.3.2 The interface to LIDB shall be in accordance with the technical references contained within.

7.3.3.3 The CCS interface to LIDB shall be the standard interface described herein.

7.3.3.4 The LIDB Data Base interpretation of the ANSI-TCAP messages shall comply with the technical reference herein. Global Title Translation (GTT) shall be maintained in the signaling network in order to support signaling network routing to the LIDB.

7.3.3.5 The application of the LIDB rates contained in Exhibit A of Attachment 2 of the Agreement will be based on a Percent CLEC LIDB Usage (PCLU) factor. Level 3 shall provide BellSouth a PCLU. The PCLU will be applied to determine the percentage of total LIDB usage to be billed to the other Party at local rates. Level 3 shall update its PCLU on the first of January, April, July and October and shall send it to BellSouth to be received no later than thirty (30) calendar days after the first of each such month based on local usage for the past three months ending the last day of December, March, June and September, respectively. Requirements associated with PCLU calculation and reporting shall be as set forth in BellSouth's Jurisdictional Factors Reporting Guide.

7.4 Signaling. BellSouth shall offer access to signaling and access to BellSouth's signaling databases subject to compatibility testing and at the rates set forth in this Attachment. BellSouth may provide mediated access to BellSouth signaling systems and databases. Available signaling elements include signaling links, STPs and SCPs. Signaling functionality will be available with both A-link and B-link connectivity.

7.4.1 Signaling Link Transport. Signaling Link Transport is a set of two (2) or four (4) dedicated 56 kbps transmission paths between Level 3 designated SPOI that provide appropriate physical diversity.

7.4.1.1 Technical Requirements

7.4.1.1.1 Signaling Link Transport shall consist of full duplex mode 56 kbps transmission paths and shall perform in the following two ways:

7.4.1.1.1.1 As an "A-link" Signaling Link Transport is a connection between a switch or SCP and a home STP switch pair; and

7.4.1.1.1.2 As a "B-link" Signaling Link Transport is a connection between two (2) STP switch pairs in different company networks (e.g., between two (2) STP switch pairs for two (2) CLECs).

7.4.1.2 Signaling Link Transport shall consist of two (2) or more signaling link layers as follows:

7.4.1.2.1 An A-link layer shall consist of two (2) links; and

7.4.1.2.2 A B-link layer shall consist of four (4) links.

7.4.1.3 A signaling link layer shall satisfy interoffice and intraoffice diversity of facilities and equipment, such that:

7.4.1.3.1 No single failure of facilities or equipment causes the failure of both links in an A-link layer (i.e., the links should be provided on a minimum of two (2) separate physical paths end-to-end); and

7.4.1.3.2 No two (2) concurrent failures of facilities or equipment shall cause the failure of all four (4) links in a B-link layer (i.e., the links should be provided on a minimum of three (3) separate physical paths end-to-end).

7.4.2 Interface Requirements. There shall be a DS1 (1.544 Mbps) interface at Level 3's designated SPOIs. Each 56 kbps transmission path shall appear as a DS0 channel within the DS1 interface.

7.4.3 STP. An STP is a signaling network function that includes all of the capabilities provided by the signaling transfer point switches and their associated signaling links that enables the exchange of SS7 messages among and between switching elements, database elements and signaling transfer point switches.

7.4.3.1 Technical Requirements

7.4.3.1.1 STPs shall provide access to BellSouth Local Switching or Tandem Switching and to BellSouth SCPs/Databases connected to BellSouth SS7 network. STPs also

provide access to third party local or tandem switching and third party provided STPs.

7.4.3.1.2 The connectivity provided by STPs shall fully support the functions of all other Network Elements connected to the BellSouth SS7 network. This includes the use of the BellSouth SS7 network to convey messages that neither originate nor terminate at a signaling end point directly connected to the BellSouth SS7 network (i.e., transit messages). When the BellSouth SS7 network is used to convey transit messages, there shall be no alteration of the Integrated Services Digital Network User Part (ISDNUP) or Transaction Capabilities Application Part (TCAP) user data that constitutes the content of the message. Rates for ISDNUP and TCAP messages are as set forth in Exhibit A of Attachment 2 of the Agreement.

7.4.3.1.3 If a BellSouth tandem switch routes traffic, based on dialed or translated digits, on SS7 trunks between a Level 3 local switch and third party local switch, the BellSouth SS7 network shall convey the TCAP messages that are necessary to provide Call Management features (Automatic Callback, Automatic Recall, and Screening List Editing) between Level 3 local STPs and the STPs that provide connectivity with the third party local switch, even if the third party local switch is not directly connected to BellSouth STPs.

7.4.3.1.4 STPs shall provide all functions of the SCCP necessary for Class 0 (basic connectionless) service as defined in Telcordia ANSI Interconnection Requirements. This includes GTT and SCCP Management procedures, as specified in ANSI T1.112.4. Where the destination signaling point is a Level 3 or third party local or tandem switching system directly connected to BellSouth SS7 network, BellSouth shall perform final GTT of messages to the destination and SCCP Subsystem Management of the destination. In all other cases, BellSouth shall perform intermediate GTT of messages to a gateway pair of STPs in an SS7 network connected with BellSouth SS7 network and shall not perform SCCP Subsystem Management of the destination. If BellSouth performs final GTT to a Level 3 database, then Level 3 agrees to provide BellSouth with the Destination Point Code for Level 3 database.

7.4.3.1.5 STPs shall provide all functions of the Operations, Maintenance and Administration Part (OMAP) as specified in applicable industry standard technical references, which may include, where available in BellSouth's network, MTP Routing Verification Test (MRVT) and SCCP Routing Verification Test (SRVT).

7.4.3.1.6 Where the destination signaling point is a BellSouth local or tandem switching system or database, or is a Level 3 or third party local or tandem switching system directly connected to the BellSouth SS7 network, STPs shall perform MRVT and SRVT to the destination signaling point. In all other cases, STPs shall perform MRVT and SRVT to a gateway pair of STPs in an SS7 network connected with the BellSouth SS7 network. This requirement may be superseded by the

specifications for Internetwork MRVT and SRVT when these become approved ANSI standards and available capabilities of BellSouth STPs.

7.4.4 SS7

7.4.4.1 When technically feasible and upon request by Level 3, SS7 AIN Access shall be made available in association with switching. SS7 AIN Access is the provisioning of AIN 0.1 triggers in an equipped BellSouth local switch and interconnection of the BellSouth SS7 network with Level 3's SS7 network to exchange TCAP queries and responses with a Level 3 SCP.

7.4.4.2 SS7 AIN Access shall provide Level 3 SCP access to an equipped BellSouth local switch via interconnection of BellSouth's SS7 and Level 3 SS7 Networks. BellSouth shall offer SS7 AIN Access through its STPs. If BellSouth requires a mediation device on any part of its network specific to this form of access, BellSouth must route its messages in the same manner. The interconnection arrangement shall result in the BellSouth local switch recognizing the Level 3 SCP as at least at parity with BellSouth's SCPs in terms of interfaces, performance and capabilities.

7.4.4.3 Interface Requirements

7.4.4.3.1 BellSouth shall provide the following STP options to connect Level 3 or Level 3-designated Local Switching systems to the BellSouth SS7 network:

7.4.4.3.1.1 An A-link interface from Level 3 Local Switching systems; and

7.4.4.3.1.2 A B-link interface from Level 3 local STPs.

7.4.4.3.2 Each type of interface shall be provided by one or more layers of signaling links.

7.4.4.3.3 The SPOI for each link shall be located at a cross-connect element in the CO where the BellSouth STP is located. There shall be a DS1 or higher rate transport interface at each of the SPOIs. Each signaling link shall appear as a DS0 channel within the DS1 or higher rate interface.

7.4.4.3.4 BellSouth shall provide intraoffice diversity between the SPOI and BellSouth STPs so that no single failure of intraoffice facilities or equipment shall cause the failure of both B-links in a layer connecting to a BellSouth STP.

7.4.4.3.5 STPs shall provide all functions of the MTP as defined in the applicable industry standard technical references.

7.4.4.4 Message Screening

7.4.4.4.1 BellSouth shall set message screening parameters so as to accept valid messages from Level 3 local or tandem switching systems destined to any signaling point

within BellSouth's SS7 network where the Level 3 switching system has a valid signaling relationship.

7.4.4.4.2 BellSouth shall set message screening parameters so as to pass valid messages from Level 3 local or tandem switching systems destined to any signaling point or network accessed through BellSouth's SS7 network where the Level 3 switching system has a valid signaling relationship.

7.4.4.4.3 BellSouth shall set message screening parameters so as to accept and pass/send valid messages destined to and from Level 3 from any signaling point or network interconnected through BellSouth's SS7 network where the Level 3 SCP has a valid signaling relationship.

7.4.5 SCP/Databases

7.4.5.1 Call Related Databases provide the storage of, access to, and manipulation of information required to offer a particular service and/or capability. BellSouth shall provide access to the following Databases: LNP, LIDB, Toll Free Number Database, ALI/DMS, and CNAM Database. BellSouth also provides access to SCE/SMS application databases and DA**.**

7.4.5.2 A SCP is deployed in a SS7 network that executes service application logic in response to SS7 queries sent to it by a switching system also connected to the SS7 network. SMS provides operational interfaces to allow for provisioning, administration and maintenance of subscriber data and service application data stored in SCPs.

7.4.5.3 Technical Requirements for SCPs/Databases

7.4.5.3.1 BellSouth shall provide physical access to SCPs through the SS7 network and protocols with TCAP as the application layer protocol.

7.4.5.3.2 BellSouth shall provide physical interconnection to databases via industry standard interfaces and protocols (e.g., SS7, ISDN and X.25).

7.4.5.3.3 The reliability of interconnection options shall be consistent with requirements for diversity and survivability.

7.5 LNP Database. The Permanent Number Portability (PNP) database supplies routing numbers for calls involving numbers that have been ported from one local service provider to another. BellSouth agrees to provide access to the PNP database at rates, terms and conditions as set forth by BellSouth and in accordance with an effective FCC or Commission directive.

7.6 CNAM Database Service

7.6.1 CNAM is the ability to associate a name with the calling party number, allowing the End User (to which a call is being terminated) to view the calling party's name before the call is answered. The calling party's information is accessed by queries launched to the CNAM database. This service also provides Level 3 the opportunity to load and store its subscriber names in the BellSouth CNAM SCPs.

7.6.2 Level 3 shall submit to BellSouth a notice of its intent to access and utilize BellSouth CNAM Database Services. Said notice shall be in writing no less than sixty (60) days prior to Level 3's access to BellSouth's CNAM Database Services and shall be addressed to Level 3's Local Contract Manager.

7.6.2.1 Level 3's End Users' names and numbers related to UNE-P Services and shall be stored in the BellSouth CNAM database, and shall be available, on a per query basis only, to all entities that launch queries to the BellSouth CNAM database. BellSouth, at its sole discretion, may opt to interconnect with and query other calling name databases. In the event BellSouth does not query a third party calling name database that stores the calling party's information, BellSouth cannot deliver the calling party's information to a called End User. In addition, BellSouth cannot deliver the calling party's information where the calling party subscribes to any service that would block or otherwise cause the information to be unavailable.

7.6.2.2 For each Level 3 End User that subscribes to a switch based vertical feature providing calling name information to that End User for calls received, BellSouth will launch a query on a per call basis to the BellSouth CNAM database, or, subject to Section 7.6.2.1 above, to a third party calling name database, to provide calling name information, if available, to Level 3's End User. Level 3 shall pay the rates set forth in Exhibit A of Attachment 2 of the Agreement, on a per query basis, for each query to the BellSouth CNAM database made on behalf of an Level 3 End User that subscribes to the appropriate vertical features that support Caller ID or a variation thereof. In addition, Level 3 shall reimburse BellSouth for any charges BellSouth pays to third party calling name database providers for queries launched to such database providers for the benefit of Level 3's End Users.

7.6.3 BellSouth currently does not have a billing mechanism for CNAM queries. Until a mechanized billing solution is available for CNAM queries, BellSouth shall bill Level 3 at the applicable rates set forth in Exhibit A of Attachment 2 of the Agreement based on a surrogate of two hundred and fifty-six (256) database queries per month per Level 3's End Users with the Caller ID feature.

7.7 SCE/SMS AIN Access

7.7.1 BellSouth's SCE/SMS AIN Access shall provide Level 3 the capability to create service applications in a BellSouth SCE and deploy those applications in a BellSouth SMS to a BellSouth SCP.

7.7.2 BellSouth's SCE/SMS AIN Access shall provide access to SCE hardware, software, testing and technical support (e.g., help desk, system administrator) resources available to Level 3. Training, documentation, and technical support will address use of SCE and SMS access and administrative functions but will not include support for the creation of a specific service application.

7.7.3 BellSouth SCP shall partition and protect Level 3 service logic and data from unauthorized access.

7.7.4 When Level 3 selects SCE/SMS AIN Access, BellSouth shall provide training, documentation, and technical support to enable Level 3 to use BellSouth's SCE/SMS AIN Access to create and administer applications.

7.7.5 Level 3 access will be provided via remote data connection (e.g., dial-in, ISDN).

7.7.6 BellSouth shall allow Level 3 to download data forms and/or tables to BellSouth SCP via BellSouth SMS without intervention from BellSouth.

## 8 Automatic Location Identification/Data Management System

8.1 911 and E911 Databases

8.1.1 BellSouth shall provide Level 3 with nondiscriminatory access to 911 and E911 databases on an unbundled basis, in accordance with 47 C.F.R. § 51.319 (f).

8.1.2 The ALI/DMS database contains End User information (including name, address, telephone information, and sometimes special information from the local service provider or End User) used to determine to which PSAP to route the call. The ALI/DMS database is used to provide enhanced routing flexibility for E911. Level 3 will be required to provide the BellSouth 911 database vendor daily service order updates to E911 database in accordance with Section 8.2.1 below.

8.2 Technical Requirements

8.2.1 BellSouth's 911 database vendor shall provide Level 3 the capability of providing updates to the ALI/DMS database through a specified electronic interface. Level 3 shall contact BellSouth's 911 database vendor directly to request interface. Level 3 shall provide updates directly to BellSouth's 911 database vendor on a daily basis. Updates shall be the responsibility of Level 3 and BellSouth shall not be liable for the transactions between Level 3 and BellSouth's 911 database vendor.

8.2.2 It is Level 3's responsibility to retrieve and confirm statistical data and to correct errors obtained from BellSouth's 911 database vendor on a daily basis. All errors will be assigned a unique error code and the description of the error and the corrective action is described in the CLEC Users Guide for Facility Based Providers that is found on the BellSouth Interconnection Web site.

8.2.3 Level 3 shall conform to the BellSouth standards as described in the CLEC Users Guide to E911 for Facilities Based Providers that is located on the BellSouth's Interconnection Web site: www.interconnection.bellsouth.com/guides.

8.2.4 Stranded Unlocks are defined as End User records in BellSouth's ALI/DMS database that have not been migrated for over ninety (90) days to Level 3, as a new provider of local service to the End User. Stranded Unlocks are those End User records that have been "unlocked" by the previous local exchange carrier that provided service to the End User and are open for Level 3 to assume responsibility for such records.

8.2.5 Based upon End User record ownership information available in the NPAC database, BellSouth shall provide a Stranded Unlock annual report to Level 3 that reflects all Stranded Unlocks that remain in the ALI/DMS database for over ninety (90) days. Level 3 shall review the Stranded Unlock report, identify its End User records and request to either delete such records or migrate the records to Level 3 within two (2) months following the date of the Stranded Unlock report provided by BellSouth. Level 3 shall reimburse BellSouth for any charges BellSouth's database vendor imposes on BellSouth for the deletion of Level 3's records.

8.3 911 PBX Locate Service®. 911 PBX Locate Service is comprised of a database capability and a separate transport component.

8.3.1 Description of Product. The transport component provides a dedicated trunk path from a Private Branch Exchange (PBX) switch to the appropriate BellSouth 911 tandem.

8.3.1.1 The database capability allows Level 3 to offer an E911 service to its PBX End Users that identifies to the PSAP the physical location of the Level 3 PBX 911 End User station telephone number for the 911 call that is placed by the End User.

8.3.2 Level 3 may order either the database capability or the transport component as desired or Level 3 may order both components of the service.

8.3.3 911 PBX Locate Database Capability. Level 3's End User or Level 3's End User's database management agent (DMA) must provide the End User PBX station telephone numbers and corresponding address and location data to BellSouth's 911 database vendor. The data will be loaded and maintained in BellSouth's ALI database.

8.3.4 Ordering, provisioning, testing and maintenance shall be provided by Level 3 pursuant to the 911 PBX Locate Marketing Service Description (MSD) that is located on the BellSouth Interconnection Web site.

8.3.5 Level 3's End User, or Level 3's End User database management agent must provide ongoing updates to BellSouth's 911 database vendor within a

commercially reasonable timeframe of all PBX station telephone number adds, moves and deletions. It will be the responsibility of Level 3 to ensure that the End User or DMA maintain the data pertaining to each End User's extension managed by the 911 PBX Locate Service product. Level 3 should not submit telephone number updates for specific PBX station telephone numbers that are submitted by Level 3's End User, or Level 3's End User DMA under the terms of 911 PBX Locate product.

8.3.5.1 Level 3 must provision all PBX station numbers in the same LATA as the E911 tandem.

8.3.6 Level 3 agrees to release, indemnify, defend and hold harmless BellSouth from any and all loss, claims, demands, suits, or other action, or any liability whatsoever, whether suffered, made, instituted or asserted by Level 3's End User or by any other party or person, for any personal injury to or death of any person or persons, or for any loss, damage or destruction of any property, whether owned by Level 3 or others, or for any infringement or invasion of the right of privacy of any person or persons, caused or claimed to have been caused, directly or indirectly, by the installation, operation, failure to operate, maintenance, removal, presence, condition, location or use of PBX Locate Service features or by any services which are or may be furnished by BellSouth in connection therewith, including but not limited to the identification of the telephone number, address or name associated with the telephone used by the party or parties accessing 911 services using 911 PBX Locate Service hereunder, except to the extent caused by BellSouth's gross negligence or wilful misconduct. Level 3 is responsible for assuring that its authorized End Users comply with the provisions of these terms and that unauthorized persons do not gain access to or use the 911 PBX Locate Service through user names, passwords, or other identifiers assigned to Level 3's End User or DMA pursuant to these terms. Specifically, Level 3's End User or DMA must keep and protect from use by any unauthorized individual identifiers, passwords, and any other security token(s) and devices that are provided for access to this product.

8.3.7 Level 3 may only use BellSouth PBX Locate Service solely for the purpose of validating and correcting 911 related data for Level 3's End Users' telephone numbers for which it has direct management authority.

8.3.8 <u>911 PBX Locate Transport Component.</u> The 911 PBX Locate Service transport component requires Level 3 to order a CAMA type dedicated trunk from Level 3's End User premise to the appropriate BellSouth 911 tandem pursuant to the following provisions.

8.3.8.1 Except as otherwise set forth below, a minimum of two (2) End User specific, dedicated 911 trunks are required between the Level 3's End User premise and the BellSouth 911 tandem as described in BellSouth's Technical Reference (TR) 73576 and in accordance with the 911 PBX Locate Marketing Service Description

located on the BellSouth Interconnection Web site. Level 3 is responsible for connectivity between the End User's PBX and Level 3's switch or POP location. Level 3 will then order 911 trunks from their switch or POP location to the BellSouth 911 tandem. The dedicated trunks shall be, at a minimum, DS0 level trunks configured as part of a digital interface (delivered over a Level 3 purchased DS1 facility that hands off at a DS1 or higher level digital or optical interface). Level 3 is responsible for ensuring that the PBX switch is capable of sending the calling station's Direct Inward Dial (DID) telephone number to the BellSouth 911 tandem in a specified Multi-frequency (MF) Address Signaling Protocol. If the PBX switch supports Primary Rate ISDN (PRI) and the calling stations are DID numbers, then the 911call can be transmitted using PRI, and there will be no requirement for the PBX Locate Transport component.

8.3.9 Ordering and Provisioning. Level 3 will submit an Access Service Request (ASR) to BellSouth to order a minimum of two (2) End User specific 911 trunks from its switch or POP location to the BellSouth 911 tandem.

8.3.9.1 Testing and maintenance shall be provided by Level 3 pursuant to the 911 PBX Locate Marketing Service description that is located on the BellSouth Interconnection Web site.

8.3.10 Rates. Rates for the 911 PBX Locate Service database component are set forth in Exhibit C. Trunks and facilities for 911 PBX Locate transport component may be ordered by Level 3 pursuant to the terms and conditions set forth in Attachment 3.

| UNBUNDLED NETWORK ELEMENTS - South Carolina | | | | | | | | | | | | | | Attachment: 2 Exh A | | | |
|---|---|---|---|---|---|---|---|---|---|---|---|---|---|---|---|---|---|
| CATEGORY | RATE ELEMENTS | Interim | Zone | BCS | USOC | RATES($) | | | | | Svc Order Submitted Elec per LSR | Svc Order Submitted Manually per LSR | Incremental Charge - Manual Svc Order vs. Electronic-1st | Incremental Charge - Manual Svc Order vs. Electronic-Add'l | Incremental Charge - Manual Svc Order vs. Electronic-Disc 1st | Incremental Charge - Manual Svc Order vs. Electronic-Disc Add'l |
| | | | | | | | Nonrecurring | | Nonrecurring Disconnect | | OSS Rates($) | | | | | |
| | | | | | | Rec | First | Add'l | First | Add'l | SOMEC | SOMAN | SOMAN | SOMAN | SOMAN | SOMAN |
| **UNBUNDLED EXCHANGE ACCESS LOOP** | | | | | | | | | | | | | | | | |
| **2-WIRE ANALOG VOICE GRADE LOOP** | | | | | | | | | | | | | | | | |
| | Switch-As-Is Conversion rate per UNE Loop, Single LSR, (per DS0) | | | UEA | URESL | | 24.88 | 3.51 | | | | | | | | |
| | Switch-As-Is Conversion rate per UNE Loop, Spreadsheet, (per DS0) | | | UEA | URESP | | 26.37 | 4.99 | | | | | | | | |
| **4-WIRE ANALOG VOICE GRADE LOOP** | | | | | | | | | | | | | | | | |
| | Switch-As-Is Conversion rate per UNE Loop, Single LSR, (per DS0) | | | UEA | URESL | | 24.88 | 3.51 | | | | | | | | |
| | Switch-As-Is Conversion rate per UNE Loop, Spreadsheet, (per DS0) | | | UEA | URESP | | 26.37 | 4.99 | | | | | | | | |
| **4-WIRE DS1 DIGITAL LOOP** | | | | | | | | | | | | | | | | |
| | Switch-As-Is Conversion rate per UNE Loop, Single LSR, (per DS1) | | | USL | URESL | | 24.88 | 3.51 | | | | | | | | |
| | Switch-As-Is Conversion rate per UNE Loop, Spreadsheet, (per DS1) | | | USL | URESP | | 26.37 | 4.99 | | | | | | | | |
| **4-WIRE 19.2, 56 OR 64 KBPS DIGITAL GRADE LOOP** | | | | | | | | | | | | | | | | |
| | Switch-As-Is Conversion rate per UNE Loop, Single LSR, (per DS0) | | | UDL | URESL | | 24.88 | 3.51 | | | | | | | | |
| | Switch-As-Is Conversion rate per UNE Loop, Spreadsheet, (per DS0) | | | UDL | URESP | | 26.37 | 4.99 | | | | | | | | |
| **UNE LOOP COMMINGLING** | | | | | | | | | | | | | | | | |
| **2-WIRE ANALOG VOICE GRADE LOOP - COMMINGLING** | | | | | | | | | | | | | | | | |
| | 2-Wire Analog Voice Grade Loop - Service Level 2 w/Loop or Ground Start Signaling - Zone 1 | | 1 | NTCVG | UEAL2 | 16.68 | 105.98 | 68.43 | 53.05 | 10.61 | | | | | | |
| | 2-Wire Analog Voice Grade Loop - Service Level 2 w/Loop or Ground Start Signaling - Zone 2 | | 2 | NTCVG | UEAL2 | 23.13 | 105.98 | 68.43 | 53.05 | 10.61 | | | | | | |
| | 2-Wire Analog Voice Grade Loop - Service Level 2 w/Loop or Ground Start Signaling - Zone 3 | | 3 | NTCVG | UEAL2 | 28.46 | 105.98 | 68.43 | 53.05 | 10.61 | | | | | | |
| | 2-Wire Analog Voice Grade Loop - Service Level 2 w/Reverse Battery Signaling - Zone 1 | | 1 | NTCVG | UEAR2 | 16.68 | 105.98 | 68.43 | 53.05 | 10.61 | | | | | | |
| | 2-Wire Analog Voice Grade Loop - Service Level 2 w/Reverse Battery Signaling - Zone 2 | | 2 | NTCVG | UEAR2 | 23.13 | 105.98 | 68.43 | 53.05 | 10.61 | | | | | | |
| | 2-Wire Analog Voice Grade Loop - Service Level 2 w/Reverse Battery Signaling - Zone 3 | | 3 | NTCVG | UEAR2 | 28.46 | 105.98 | 68.43 | 53.05 | 10.61 | | | | | | |
| | Switch-As-Is Conversion rate per UNE Loop, Single LSR, (per DS0) | | | NTCVG | URESL | | 24.88 | 3.51 | | | | | | | | |
| | Switch-As-Is Conversion rate per UNE Loop, Spreadsheet, (per DS0) | | | NTCVG | URESP | | 26.37 | 4.99 | | | | | | | | |
| | CLEC to CLEC Conversion Charge without outside dispatch | | | NTCVG | UREWO | | 87.90 | 36.44 | | | | | | | | |
| | Loop Tagging - Service Level 2 (SL2) | | | NTCVG | URETL | | 11.24 | 1.10 | | | | | | | | |
| **4-WIRE ANALOG VOICE GRADE LOOP** | | | | | | | | | | | | | | | | |
| | 4-Wire Analog Voice Grade Loop - Zone 1 | | 1 | NTCVG | UEAL4 | 32.59 | 132.38 | 94.83 | 59.35 | 14.61 | | | | | | |
| | 4-Wire Analog Voice Grade Loop - Zone 2 | | 2 | NTCVG | UEAL4 | 43.89 | 132.38 | 94.83 | 59.35 | 14.61 | | | | | | |
| | 4-Wire Analog Voice Grade Loop - Zone 3 | | 3 | NTCVG | UEAL4 | 43.38 | 132.38 | 94.83 | 59.35 | 14.61 | | | | | | |
| | Switch-As-Is Conversion rate per UNE Loop, Single LSR, (per DS0) | | | NTCVG | URESL | | 24.88 | 3.51 | | | | | | | | |
| | Switch-As-Is Conversion rate per UNE Loop, Spreadsheet, (per DS0) | | | NTCVG | URESP | | 26.37 | 4.99 | | | | | | | | |
| | CLEC to CLEC Conversion Charge without outside dispatch | | | NTCVG | UREWO | | 87.90 | 36.44 | | | | | | | | |
| **4-WIRE DS1 DIGITAL LOOP - COMMINGLING** | | | | | | | | | | | | | | | | |
| | 4-Wire DS1 Digital Loop - Zone 1 | | 1 | NTCD1 | USLXX | 79.51 | 253.03 | 157.89 | 44.80 | 11.73 | | | | | | |
| | 4-Wire DS1 Digital Loop - Zone 2 | | 2 | NTCD1 | USLXX | 136.00 | 253.03 | 157.89 | 44.80 | 11.73 | | | | | | |
| | 4-Wire DS1 Digital Loop - Zone 3 | | 3 | NTCD1 | USLXX | 229.15 | 253.03 | 157.89 | 44.80 | 11.73 | | | | | | |
| | Switch-As-Is Conversion rate per UNE Loop, Single LSR, (per DS1) | | | NTCD1 | URESL | | 24.88 | 3.51 | | | | | | | | |

| UNBUNDLED NETWORK ELEMENTS - South Carolina | | | | | | | | | | | | | | Attachment: 2 Exh A | | | |
|---|---|---|---|---|---|---|---|---|---|---|---|---|---|---|---|---|---|
| CATEGORY | | RATE ELEMENTS | Interim | Zone | BCS | USOC | RATES($) | | | | | Svc Order Submitted Elec per LSR | Svc Order Submitted Manually per LSR | Incremental Charge - Manual Svc Order vs. Electronic-1st | Incremental Charge - Manual Svc Order vs. Electronic-Add'l | Incremental Charge - Manual Svc Order vs. Electronic-Disc 1st | Incremental Charge - Manual Svc Order vs. Electronic-Disc Add'l |
| | | | | | | | | Nonrecurring | | Nonrecurring Disconnect | | | | OSS Rates($) | | | |
| | | | | | | | Rec | First | Add'l | First | Add'l | SOMEC | SOMAN | SOMAN | SOMAN | SOMAN | SOMAN |
| | | Switch-As-Is Conversion rate per UNE Loop, Spreadsheet, (per DS1) | | | NTCD1 | URESP | | 26.37 | 4.99 | | | | | | | | |
| | | CLEC to CLEC Conversion Charge without outside dispatch | | | NTCD1 | UREWO | | 101.30 | 43.13 | | | | | | | | |
| | 4-WIRE 19.2, 56 OR 64 KBPS DIGITAL GRADE LOOP | | | | | | | | | | | | | | | | |
| | | 4 Wire Unbundled Digital Loop 2.4 Kbps - Zone 1 | | 1 | NTCUD | UDL2X | 29.93 | 126.66 | 89.12 | 59.35 | 14.61 | | | | | | |
| | | 4 Wire Unbundled Digital Loop 2.4 Kbps - Zone 2 | | 2 | NTCUD | UDL2X | 33.99 | 126.66 | 89.12 | 59.35 | 14.61 | | | | | | |
| | | 4 Wire Unbundled Digital Loop 2.4 Kbps - Zone3 | | 3 | NTCUD | UDL2X | 34.74 | 126.66 | 89.12 | 59.35 | 14.61 | | | | | | |
| | | 4 Wire Unbundled Digital Loop 4.8 Kbps -Zone 1 | | 1 | NTCUD | UDL4X | 29.93 | 126.66 | 89.12 | 59.35 | 14.61 | | | | | | |
| | | 4 Wire Unbundled Digital Loop 4.8 Kbps - Zone 2 | | 2 | NTCUD | UDL4X | 33.99 | 126.66 | 89.12 | 59.35 | 14.61 | | | | | | |
| | | 4 Wire Unbundled Digital Loop 4.8 Kbps - Zone 3 | | 3 | NTCUD | UDL4X | 34.74 | 126.66 | 89.12 | 59.35 | 14.61 | | | | | | |
| | | 4 Wire Unbundled Digital Loop 9.6 Kbps - Zone 1 | | 1 | NTCUD | UDL9X | 29.93 | 126.66 | 89.12 | 59.35 | 14.61 | | | | | | |
| | | 5 Wire Unbundled Digital Loop 9.6 Kbps - Zone 2 | | 2 | NTCUD | UDL9X | 33.99 | 126.66 | 89.12 | 59.35 | 14.61 | | | | | | |
| | | 6 Wire Unbundled Digital Loop 9.6 Kbps - Zone 3 | | 3 | NTCUD | UDL9X | 34.74 | 126.66 | 89.12 | 59.35 | 14.61 | | | | | | |
| | | 4 Wire Unbundled Digital 19.2 Kbps - Zone 1 | | 1 | NTCUD | UDL19 | 29.93 | 126.66 | 89.12 | 59.35 | 14.61 | | | | | | |
| | | 4 Wire Unbundled Digital 19.2 Kbps - Zone 2 | | 2 | NTCUD | UDL19 | 33.99 | 126.66 | 89.12 | 59.35 | 14.61 | | | | | | |
| | | 4 Wire Unbundled Digital 19.2 Kbps - Zone 3 | | 3 | NTCUD | UDL19 | 34.74 | 126.66 | 89.12 | 59.35 | 14.61 | | | | | | |
| | | 4 Wire Unbundled Digital Loop 56 Kbps - Zone 1 | | 1 | NTCUD | UDL56 | 29.93 | 126.66 | 89.12 | 59.35 | 14.61 | | | | | | |
| | | 4 Wire Unbundled Digital Loop 56 Kbps - Zone 2 | | 2 | NTCUD | UDL56 | 33.99 | 126.66 | 89.12 | 59.35 | 14.61 | | | | | | |
| | | 4 Wire Unbundled Digital Loop 56 Kbps - Zone 3 | | 3 | NTCUD | UDL56 | 34.74 | 126.66 | 89.12 | 59.35 | 14.61 | | | | | | |
| | | 4 Wire Unbundled Digital Loop 64 Kbps - Zone 1 | | 1 | NTCUD | UDL64 | 29.93 | 126.66 | 89.12 | 59.35 | 14.61 | | | | | | |
| | | 4 Wire Unbundled Digital Loop 64 Kbps - Zone 2 | | 2 | NTCUD | UDL64 | 33.99 | 126.66 | 89.12 | 59.35 | 14.61 | | | | | | |
| | | 4 Wire Unbundled Digital Loop 64 Kbps - Zone 3 | | 3 | NTCUD | UDL64 | 34.74 | 126.66 | 89.12 | 59.35 | 14.61 | | | | | | |
| | | Switch-As-Is Conversion rate per UNE Loop, Single LSR, (per DS0) | | | NTCUD | URESL | | 24.88 | 3.51 | | | | | | | | |
| | | Switch-As-Is Conversion rate per UNE Loop, Spreadsheet, (per DS0) | | | NTCUD | URESP | | 26.37 | 4.99 | | | | | | | | |
| | | CLEC to CLEC Conversion Charge without outside dispatch | | | NTCUD | UREWO | | 102.34 | 49.85 | | | | | | | | |
| | | Order Coordination for Specified Conversion Time (per LSR) | | | NTCVG, NTCUD, NTCD1 | OCOSL | | 18.13 | | | | | | | | | |
| LINE SPLITTING | | | | | | | | | | | | | | | | | |
| | 2-WIRE ANALOG VOICE GRADE LOOP | | | | | | | | | | | | | | | | |
| | | 2 Wire Analog Voice Grade Loop-Service Level 1-Line Splitting-Zone 1 | | 1 | UEPSR UEPSB | UEALS | 14.94 | 37.92 | 17.62 | 23.56 | 5.32 | | | | | | |
| | | 2 Wire Analog Voice Grade Loop-Service Level 1-Line Splitting-Zone 1 | | 1 | UEPSR UEPSB | UEABS | 14.94 | 37.92 | 17.62 | 23.56 | 5.32 | | | | | | |
| | | 2 Wire Analog Voice Grade Loop- Service Level 1-Line Splitting-Zone 2 | | 2 | UEPSR UEPSB | UEALS | 21.39 | 37.92 | 17.62 | 23.56 | 5.32 | | | | | | |
| | | 2 Wire Analog Voice Grade Loop- Service Level 1-Line Splitting-Zone 2 | | 2 | UEPSR UEPSB | UEABS | 21.39 | 37.92 | 17.62 | 23.56 | 5.32 | | | | | | |
| | | 2 Wire Analog Voice Grade Loop-Service Level 1-Line Splitting-Zone 3 | | 3 | UEPSR UEPSB | UEALS | 26.72 | 37.92 | 17.62 | 23.56 | 5.32 | | | | | | |
| | | 2 Wire Analog Voice Grade Loop-Service Level 1-Line Splitting-Zone 3 | | 3 | UEPSR UEPSB | UEABS | 26.72 | 37.92 | 17.62 | 23.56 | 5.32 | | | | | | |
| ADDITIONAL NETWORK ELEMENTS | | | | | | | | | | | | | | | | | |
| | | Wholesale to UNE, Switch-As-Is Conversion Charge | | | UNCVX, U1TVX, UNCDX, U1TDX, UNC1X, U1TD1,UNC3X, U1TD3, UNCSX, U1TS1, UDF,UDFCX | UNCCC | | 5.61 | 5.61 | | | | | | | | |
| | | Unbundled Misc Rate Element, SNE SAI, Single Network Element - Switch As Is Non-recurring Charge, per circuit (LSR) | l | | U1TVX, U1TDX, U1TD1, U1TD3, U1TS1, UDF, UE3 | URESL | | 40.27 | 13.52 | | | | | | | | |
| | | Unbundled Misc Rate Element, SNE SAI, Single Network Element - Switch As Is Non-recurring Charge, incremental charge per circuit on a spreadsheet | i | | U1TVX, U1TDX, U1TD1, U1TD3, U1TS1, UDF, UE3 | URESP | | 23.80 | 12.11 | | | | | | | | |
| COMMINGLING | | | | | | | | | | | | | | | | | |

| UNBUNDLED NETWORK ELEMENTS - South Carolina | | | | | | | | | | | | | | Attachment: 2 Exh A | | | |
|---|---|---|---|---|---|---|---|---|---|---|---|---|---|---|---|---|---|
| CATEGORY | | RATE ELEMENTS | Interim | Zone | BCS | USOC | RATES($) | | | | | Svc Order Submitted Elec per LSR | Svc Order Submitted Manually per LSR | Incremental Charge - Manual Svc Order vs. Electronic-1st | Incremental Charge - Manual Svc Order vs. Electronic-Add'l | Incremental Charge - Manual Svc Order vs. Electronic-Disc 1st | Incremental Charge - Manual Svc Order vs. Electronic-Disc Add'l |
| | | | | | | | | Nonrecurring | | Nonrecurring Disconnect | | | | OSS Rates($) | | | |
| | | | | | | | Rec | First | Add'l | First | Add'l | SOMEC | SOMAN | SOMAN | SOMAN | SOMAN | SOMAN |
| | | Commingling Authorization | | | UNCVX, UNCDX, UNC1X, UNC3X, UNCSX, U1TD1, U1TD3, U1TS1, UE3, UDLSX, U1TVX, U1TDX, U1TUB, ULDVX, ULDD1, ULDD3, ULDS1 | CMGAU | 0.00 | 0.00 | 0.00 | 0.00 | 0.00 | | | | | | |
| | **Commingled (UNE part of single bandwidth circuit)** | | | | | | | | | | | | | | | | |
| | | Commingled VG COCI | | | XDV2X, NTCVG | 1D1VG | 0.56 | 6.59 | 4.73 | | | | | | | | |
| | | Commingled Digital COCI | | | XDV6X, NTCUD | 1D1DD | 1.19 | 6.59 | 4.73 | | | | | | | | |
| | | Commingled ISDN COCI | | | XDD4X | UC1CA | 2.56 | 6.59 | 4.73 | | | | | | | | |
| | | Commingled 2-wire VG Interoffice Channel Facility Termination | | | XDV2X | U1TV2 | 24.30 | 40.63 | 27.47 | 16.77 | 6.91 | | | | | | |
| | | Commingled 4-wire VG Interoffice Channel Facility Termination | | | XDV6X | U1TV4 | 21.29 | 40.63 | 27.47 | 16.77 | 6.91 | | | | | | |
| | | Commingled 56kbps Interoffice Channel Facility Termination | | | XDD4X | U1TD5 | 16.76 | 40.63 | 27.47 | 16.77 | 6.91 | | | | | | |
| | | Commingled 64kbps Interoffice Channel Facility Termination | | | XDD4X | U1TD6 | 16.76 | 40.63 | 27.47 | 16.77 | 6.91 | | | | | | |
| | | Commingled VG/DS0 Interoffice Channel per mile | | | XDV2X, XDV6X, XDD4X | 1L5XX | 0.0167 | | | | | | | | | | |
| | | Commingled 2-wire Local Loop Zone 1 | | 1 | XDV2X | UEAL2 | 16.68 | 105.98 | 68.43 | 53.05 | 10.61 | | | | | | |
| | | Commingled 2-wire Local Loop Zone 2 | | 2 | XDV2X | UEAL2 | 23.13 | 105.98 | 68.43 | 53.05 | 10.61 | | | | | | |
| | | Commingled 2-wire Local Loop Zone 3 | | 3 | XDV2X | UEAL2 | 28.46 | 105.98 | 68.43 | 53.05 | 10.61 | | | | | | |
| | | Commingled 4-wire Local Loop Zone 1 | | 1 | XDV6X | UEAL4 | 32.59 | 132.38 | 94.83 | 59.35 | 14.61 | | | | | | |
| | | Commingled 4-wire Local Loop Zone 2 | | 2 | XDV6X | UEAL4 | 43.89 | 132.38 | 94.83 | 59.35 | 14.61 | | | | | | |
| | | Commingled 4-wire Local Loop Zone 3 | | 3 | XDV6X | UEAL4 | 43.38 | 132.38 | 94.83 | 59.35 | 14.61 | | | | | | |
| | | Commingled 56kbps Local Loop Zone 1 | | 1 | XDD4X | UDL56 | 29.93 | 126.66 | 89.12 | 59.35 | 14.61 | | | | | | |
| | | Commingled 56kbps Local Loop Zone 2 | | 2 | XDD4X | UDL56 | 33.99 | 126.66 | 89.12 | 59.35 | 14.61 | | | | | | |
| | | Commingled 56kbps Local Loop Zone 3 | | 3 | XDD4X | UDL56 | 34.74 | 126.66 | 89.12 | 59.35 | 14.61 | | | | | | |
| | | Commingled 64kbps Local Loop Zone 1 | | 1 | XDD4X | UDL64 | 29.93 | 126.66 | 89.12 | 59.35 | 14.61 | | | | | | |
| | | Commingled 64kbps Local Loop Zone 2 | | 2 | XDD4X | UDL64 | 33.99 | 126.66 | 89.12 | 59.35 | 14.61 | | | | | | |
| | | Commingled 64kbps Local Loop Zone 3 | | 3 | XDD4X | UDL64 | 34.74 | 126.66 | 89.12 | 59.35 | 14.61 | | | | | | |
| | | Commingled ISDN Local Loop Zone 1 | | 1 | XDD4X | U1L2X | 25.21 | 117.58 | 80.03 | 53.05 | 10.61 | | | | | | |
| | | Commingled ISDN Local Loop Zone 2 | | 2 | XDD4X | U1L2X | 32.76 | 117.58 | 80.03 | 53.05 | 10.61 | | | | | | |
| | | Commingled ISDN Local Loop Zone 3 | | 3 | XDD4X | U1L2X | 37.70 | 117.58 | 80.03 | 53.05 | 10.61 | | | | | | |
| | | Commingled DS1 COCI | | | XDH1X, NTCD1 | UC1D1 | 8.64 | 6.59 | 4.73 | | | | | | | | |
| | | Commingled DS1 Interoffice Channel Facility Termination | | | XDH1X | U1TF1 | 77.14 | 89.47 | 81.99 | 16.39 | 14.48 | | | | | | |
| | | Commingled DS1 Interoffice Channel per mile | | | XDH1X | 1L5XX | 0.3415 | | | | | | | | | | |
| | | Commingled DS1/DS0 Channel System | | | XDH1X | MQ1 | 107.57 | 91.24 | 62.71 | 10.56 | 9.81 | | | | | | |
| | | Commingled DS1 Local Loop Zone 1 | | 1 | XDH1X | USLXX | 79.51 | 253.03 | 157.89 | 44.80 | 11.73 | | | | | | |
| | | Commingled DS1 Local Loop Zone 2 | | 2 | XDH1X | USLXX | 136.00 | 253.03 | 157.89 | 44.80 | 11.73 | | | | | | |
| | | Commingled DS1 Local Loop Zone 3 | | 3 | XDH1X | USLXX | 229.15 | 253.03 | 157.89 | 44.80 | 11.73 | | | | | | |
| | | Commingled DS3 Local Loop Facility Termination | | | HFQC6 | UE3PX | 306.36 | 452.52 | 264.53 | 119.75 | 83.77 | | | | | | |
| | | Commingled DS3/STS-1 Local Loop per mile | | | HFQC6, HFRST | 1L5ND | 12.26 | | | | | | | | | | |
| | | Commingled STS-1 Local Loop Facility Termination | | | HFRST | UDLS1 | 313.49 | 452.52 | 264.53 | 119.75 | 83.77 | | | | | | |
| | | Commingled DS3/DS1 Channel System | | | HFQC6 | MQ3 | 144.02 | 178.54 | 94.18 | 33.33 | 31.90 | | | | | | |
| | | Commingled DS3 Interoffice Channel Facility Termination | | | HFQC6 | U1TF3 | 880.65 | 279.37 | 163.12 | 60.33 | 58.59 | | | | | | |
| | | Commingled DS3 Interoffice Channel per mile | | | HFQC6 | 1L5XX | 8.02 | | | | | | | | | | |
| | | Commingled STS-1Interoffice Channel Facility Termination | | | HFRST | U1TFS | 880.55 | 279.37 | 163.12 | 60.33 | 58.59 | | | | | | |
| | | Commingled STS-1Interoffice Channel per mile | | | HFRST | 1L5XX | 8.02 | | | | | | | | | | |
| | | Commingled Dark Fiber - Interoffice Transport, Per Four Fiber Strands, Per Route Mile Or Fraction Thereof | | | HEQDL | 1L5DF | 36.41 | | | | | | | | | | |
| | | Commingled Dark Fiber - Interoffice Transport, Per Four Fiber Strands, Per Route Mile Or Fraction Thereof | | | HEQDL | UDF14 | | 640.51 | 138.17 | 317.76 | 198.11 | | | | | | |
| **LINE SHARING** | | | | | | | | | | | | | | | | | |
| | **NOTE 1: The Line Sharing monthly recurring rates for all installations completed on or after October 02, 2003 shall be billed as follows:** | | | | | | | | | | | | | | | | |
| | **NOTE 1: 10/02/2003 – 10/01/2004: 25% of the rate for an unbundled copper loop non-designed ("UCLND")** | | | | | | | | | | | | | | | | |
| | **NOTE 1: 10/02/2004 – 10/01/2005: 50% of the rate for UCLND** | | | | | | | | | | | | | | | | |
| | **NOTE 1: 10/02/2005 – 10/01/2006: 75% of the rate for UCLND** | | | | | | | | | | | | | | | | |

| UNBUNDLED NETWORK ELEMENTS - South Carolina | | | | | | | | | | | | | | Attachment: 2 Exh A | | | |
|---|---|---|---|---|---|---|---|---|---|---|---|---|---|---|---|---|---|
| CATEGORY | RATE ELEMENTS | Interim | Zone | BCS | USOC | RATES($) | | | | | Svc Order Submitted Elec per LSR | Svc Order Submitted Manually per LSR | Incremental Charge - Manual Svc Order vs. Electronic-1st | Incremental Charge - Manual Svc Order vs. Electronic-Add'l | Incremental Charge - Manual Svc Order vs. Electronic-Disc 1st | Incremental Charge - Manual Svc Order vs. Electronic-Disc Add'l |
| | | | | | | | Nonrecurring | | Nonrecurring Disconnect | | OSS Rates($) | | | | | |
| | | | | | | Rec | First | Add'l | First | Add'l | SOMEC | SOMAN | SOMAN | SOMAN | SOMAN | SOMAN |
| | NOTE 1: Above will apply to USOCS: ULSDT and ULSCT | | | | | | | | | | | | | | | |
| | **NOTE 2: The Line Sharing monthly recurring rates with USOCs ULSDC and ULSCC applies only to circuits installed and inservice on or before October 1, 2003 | | | | | | | | | | | | | | | |
| | LINE SHARING | | | | | | | | | | | | | | | |
| | SPLITTERS-CENTRAL OFFICE BASED | | | | | | | | | | | | | | | |
| | Line Sharing Splitter, per System 96 Line Capacity | | | ULS | ULSDA | 216.22 | 189.21 | 0.00 | 178.38 | 0.00 | | | | | | |
| | Line Sharing Splitter, per System 24 Line Capacity | | | ULS | ULSDB | 54.05 | 189.21 | 0.00 | 178.38 | 0.00 | | | | | | |
| | Line Sharing Splitter, Per System, 8 Line Capacity | | | ULS | ULSD8 | 18.02 | 189.21 | 0.00 | 178.38 | 0.00 | | | | | | |
| | Line Sharing-DLEC Owned Splitter in CO-CFA activaton-deactivation (per LSOD) | | | ULS | ULSDG | | 86.67 | 0.00 | 49.95 | 0.00 | | | | | | |
| | END USER ORDERING-CENTRAL OFFICE BASED LINE SHARING | | | | | | | | | | | | | | | |
| | Line Sharing - per Line Activation (BST Owned splitter) - OBSOLETE see **NOTE 2 | | | ULS | ULSDC | 0.61 | 18.55 | 10.62 | 10.04 | 4.93 | | | | | | |
| | Line Share Service, TRO per line activation, BST owned splitter - Central Office Located (75% of UCLND) - please see NOTE 1 (E:10/2/2005) | | | ULS | ULSDT | 9.71 | 18.55 | 10.62 | 10.04 | 4.93 | | | | | | |
| | Line Sharing - per Subsequent Activity per Line Rearrangement(BST Owned Splitter) | | | ULS | ULSDS | | 16.42 | 8.21 | | | | | | | | |
| | Line Sharing - per Subsequent Activity per Line Rearrangement(DLEC Owned Splitter) | | | ULS | ULSCS | | 16.42 | 8.21 | | | | | | | | |
| | Line Sharing - per Line Activation (DLEC owned Splitter) - OBSOLETE see **NOTE 2 | | | ULS | ULSCC | 0.61 | 47.44 | 19.31 | 20.67 | 12.74 | | | | | | |
| | Line Share Service, TRO per line activation, CLEC owned splitter - Central Office Located (75% of UCLND) - please see NOTE 1 (E:10/2/2005) | | | ULS | ULSCT | 9.71 | 47.44 | 19.31 | 20.67 | 12.74 | | | | | | |
| | Note: Rates displaying an "I" in Interim column are interim as a result of a Commission order. | | | | | | | | | | | | | | | |

**Amendment to the Agreement**
**Between**
**Level 3 Communications, L.L.C.**
**and**
**BellSouth Telecommunications, Inc.**
**Dated June 23, 2004**

Pursuant to this Amendment, (the "Amendment"), Level 3 Communications, L.L.C. (Level 3), and BellSouth Telecommunications, Inc. (BellSouth), hereinafter referred to collectively as the "Parties", hereby agree to amend that certain Interconnection Agreement between the Parties dated June 23, 2004 (Agreement).

WHEREAS, on March 1, 2006, the North Carolina Public Utilities Commission (Commission) issued its Order in Docket No. P-55, Sub 1549 (Order), Proceeding to Consider Amendments to Interconnection Agreements Between BellSouth Telecommunications, Inc. and Competing Local Providers Due to Changes of Law.

WHEREAS, the Parties are obligated to amend the Agreement to bring it in compliance with the Commission's Order;

NOW, THEREFORE, in consideration of the mutual provisions contained herein and other good and valuable consideration, the receipt and sufficiency of which are hereby acknowledged, the Parties hereby covenant and agree as follows:

1. The Parties hereby agree to incorporate into the Agreement the contract provisions set forth in Exhibit A hereto, and such contract provisions shall apply to services provided in the State of North Carolina only.

2. The Parties hereby agree to incorporate into the Agreement the rates set forth in Exhibit B hereto, and such rates shall apply to services provided in the State of North Carolina only.

3. To the extent that such contract provisions or rates as set forth in Exhibits A and B hereto conflict with any other rates, terms and conditions in the Agreement, the contract provisions and rates in Exhibits A and B shall prevail in the State of North Carolina.

4. Further, to the extent that defined terms in this Amendment differ from defined terms in the Agreement, such defined terms in the Agreement shall be deemed to have the same meaning as the alternative defined terms in this Amendment to the extent necessary to give full effect to this Amendment consistent with the North Carolina Utilities Commission's Order.

5. This Amendment shall be approved on the date the North Carolina Public Utilities Commission issues an order approving the Amendment (Approved Date) and shall be deemed effective on March 11, 2006 (Effective Date).

6. All of the other provisions of the Agreement shall remain in full force and effect.

7. Either or both of the Parties is authorized to submit this Amendment to the North Carolina Utilities Commission for approval subject to Section 252(e) of the Federal Telecommunications Act of 1996.

IN WITNESS WHEREOF, the Parties have executed this Amendment the day and year written below.

**BellSouth Telecommunications, Inc.**

By: Kristen E. Shore

Name: Kristen E. Shore

Title: Director

Date: 12/14/06

**Level 3 Communications, L.L.C.**

By:

Name: Andrew L. Gavalas

Title: Vice President

Date: 12/8/06

Version: NC COL Amendment
CLEC with No CA with Line Sharing
03/09/06

**Issue 1 – What is the appropriate language to implement the FCC's transition plan for: (1) switching; (2) high-capacity loops; and (3) dedicated transport as detailed in the FCC's TRRO, issued February 4, 2005?**

**1. Local Switching**

1.1. Notwithstanding anything to the contrary in this Agreement, the services offered pursuant to this Section 1 are limited to DS0 level Local Switching and BellSouth is not required to provide Local Switching pursuant to this Agreement except as set forth in Section 1.2 below.

1.1.1 BellSouth shall not be required to unbundle local circuit switching for Level 3 for a particular End User when Level 3: (1) serves an End User with four (4) or more voice-grade (DS0) equivalents or lines served by BellSouth in Zone 1 of the following MSAs: Atlanta, GA; Miami, FL; Orlando, FL; Ft. Lauderdale, FL; Charlotte-Gastonia-Rock Hill, NC; Greensboro-Winston Salem-High Point, NC; Nashville, TN; and New Orleans, LA; or (2) serves an End User with a DS1 or higher capacity Loop in any service area covered by this Agreement. To the extent that Level 3 is serving any End User as described above as of the Effective Date of this Agreement, such End User's arrangement may not remain in place and such Arrangement must be terminated by Level 3 or transitioned by Level 3, or BellSouth shall disconnect such Arrangements upon thirty (30) days notice.

**1.2 Transition for Local Switching**

1.2.1 For purposes of this Section 1, the Transition Period for the Embedded Base of Local Switching is the twelve (12) month period beginning March 11, 2005 and ending March 10, 2006.

1.2.2 For the purposes of this Section 1, Embedded Base shall mean Local Switching and any additional elements that are required to be provided in conjunction therewith that were in service for Level 3 as of March 10, 2005. Subsequent disconnects or loss of End Users shall be removed from the Embedded Base.

1.2.3 During the Transition Period only, BellSouth shall make Local Switching available for the Embedded Base, in addition to all elements that are required to be provided in conjunction with Local Switching, at the rates, terms and conditions set forth in this Attachment. The Transition Period shall apply only to Level 3's Embedded Base and Level 3 shall not place new orders for Local Switching pursuant to this Agreement.

1.2.4 Transition Period Pricing. From March 11, 2005, through the completion of the Transition Period, BellSouth shall charge a rate for Level 3's Embedded Base of Local Switching equal to the higher of:

1.2.4.1 The rate at which during Level 3 leased that combination of elements on June 15, 2004, plus one dollar; or

1.2.4.2 The rate the Commission established, if any, between June 16, 2004, and the effective date of the TRRO, plus one dollar.

1.2.4.3 These rates shall be as set forth in Exhibit A to Attachment 2 of the Parties Agreement and this Section 1.2.4.

1.2.5 Level 3 must submit orders, to disconnect or convert all of its Embedded Base of Local Switching to other BellSouth services as Conversions pursuant to Section 21.1 below by March 10, 2006, or by other mutually agreed upon date.

1.2.6 If Level 3 fails to submit orders to disconnect or convert all of its Embedded Base of Local Switching as specified in Section 1.2.5 above prior to March 10, 2006 or by other mutually agreed upon date, BellSouth will identify Level 3's remaining Embedded Base of Local Switching and will disconnect such Local Switching effective March 11, 2006. Those circuits identified and disconnected by BellSouth shall be subject to the applicable disconnect charges as set forth in this Agreement.

1.2.7 Effective March 11, 2006, Local Switching will no longer be made available pursuant to this Agreement.

1.2.8 To the extent that Level 3 no longer desires to provide a particular service, it must notify BellSouth of its intent to discontinue and the parties must coordinate that disconnect to take place prior the conclusion of the applicable transition period. Level 3 must also adhere to Commission Rule R17-2(q) regarding the discontinuance of service to customers.

**2. UNE-P**

2.1 DS0 Local Switching, as defined in Section 1 above, in combination with a Loop and Common (Shared) Transport (UNE-P) provides local exchange service for the origination or termination of calls. UNE-P supports the same local calling and feature requirements as described in the Local Switching section of this Attachment and the ability to presubscribe to a primary carrier for intraLATA toll service and/or to presubscribe to a primary carrier for interLATA toll service.

2.2 Notwithstanding anything to the contrary in this Agreement, BellSouth is not required to provide UNE-P pursuant to this Agreement except as set forth in this Section 2.

**2.3 Transition Period for UNE-P**

2.3.1 For purposes of this Section 2, the Transition Period for UNE-P is the twelve (12) month period beginning March 11, 2005 and ending March 10, 2006.

2.3.2 For the purposes of this Section 2, Embedded Base shall mean UNE-P and any additional elements that are required to be provided in conjunction therewith that were in service for Level 3 as of March 10, 2005. Subsequent disconnects or loss of End Users shall be removed from the Embedded Base.

2.3.3 During the Transition Period only, BellSouth shall make UNE-P available for the Embedded Base, in addition to all elements that are required to be provided in conjunction with UNE-P, at the rates, terms and conditions set forth in this Attachment. The Transition Period shall apply only to Level 3's Embedded Base and Level 3 shall not place new orders for UNE-P pursuant to this Agreement.

2.3.4 Transition Period Pricing. From March 11, 2005, through the completion of the Transition Period, BellSouth shall charge a rate for Level 3's Embedded Base of UNE-P equal to the higher of:

2.3.4.1. The rate at which during Level 3 leased that combination of elements on June 15, 2004, plus one dollar; or

2.3.4.2 The rate the Commission established, if any, between June 16, 2004, and the effective date of the TRRO, plus one dollar.

2.3.4.3 These rates shall be as set forth in Exhibit A to Attachment 2 of the Parties Agreement and this Section 2.3.4.

2.3.5 Level 3 must submit orders, or spreadsheets, or if converting to UNE Loops, must use the Bulk Migration process to either disconnect or convert all of its Embedded Base of UNE-P to other BellSouth services as Conversions pursuant to Section 21.1 below by March 10, 2005 or by other mutually agreed upon date.

2.3.6 If Level 3 fails to submit orders or spreadsheets converting all of the Embedded Base of UNE-P as specified in Section 2.3.5 above prior to March 10, 2005 or by other mutually agreed upon date, BellSouth will identify Level 3's remaining Embedded Base of UNE-P and will transition such UNE-P to resold BellSouth telecommunication services, as set forth in Attachment 1 effective March 11, 2006. Those circuits identified and transitioned by BellSouth shall be subject to the applicable disconnect charges as set forth in this Agreement and the full nonrecurring charges for installation of such BellSouth services as set forth in BellSouth's tariffs.

2.3.7 For Embedded Base UNE-P converted pursuant to Section 2.3.5 above or transitioned pursuant to Section 2.3.6 above, the applicable recurring tariff charges shall apply as of March 11, 2006.

2.3.8 Effective March 11, 2006, UNE-P will no longer be made available pursuant to this Agreement.

2.3.9 To the extent that Level 3 no longer desires to provide a particular service, it must notify BellSouth of its intent to discontinue and the parties must coordinate the disconnect to take place prior the conclusion of the applicable transition period. Level 3 must also adhere to Commission Rule R17-2(q) regarding the discontinuance of service to customers.

3. 4-wire Unbundled DS1 Digital Loop

3.1 This is a designed 4-wire Loop that is provisioned according to industry standards for DS1 or Primary Rate ISDN services and will come standard with a test point, OC, and a DLR. A DS1 Loop may be provisioned over a variety of loop transmission technologies including copper, HDSL-based technology or fiber optic transport systems. It will include a 4-wire DS1 Network Interface at the End User's location.

3.2 DS3 Loop. DS3 Loop is a two-point digital transmission path which provides for simultaneous two-way transmission of serial, bipolar, return-to-zero isochronous digital electrical signals at a transmission rate of forty-four point seven thirty-six (44.736) megabits per second (Mbps) that is dedicated to the use of the ordering CLEC in its provisioning of local exchange and associated exchange access services. It may provide transport for twenty-eight (28) DS1 channels, each of which provides the digital equivalent of twenty-four (24) analog voice grade channels. The interface to unbundled dedicated DS3 transport is a metallic-based electrical interface.

**3.3 Transition for DS1 and DS3 Loops**

3.3.1 For purposes of this Section 3, the Transition Period for the Embedded Base of DS1 and DS3 Loops and for the Excess DS1 and DS3 Loops (defined in 3.3.3) is the twelve (12) month period beginning March 11, 2005 and ending March 10, 2006.

3.3.2 For purposes of this Section 3, Embedded Base means DS1 and DS3 Loops that were in service for Level 3 as of March 10, 2005 in those wire centers that, as of such date, met the criteria set forth in Sections 3.3.6.1 or 3.3.6.2 below. Subsequent disconnects or loss of End Users shall be removed from the Embedded Base.

3.3.3 Excess DS1 and DS3 Loops are those Level 3 DS1 and DS3 Loops in service as of March 10, 2005, in excess of the caps set forth in Section 3.3.4 below, respectively. Subsequent disconnects or loss of End Users shall be removed from Excess DS1 and DS3 Loops.

3.3.4 BellSouth shall not provide more than ten (10) unbundled DS1 Loops to Level 3 at any single building in which DS1 Loops are available as unbundled loops. Level 3 may obtain a maximum of a single Unbundled DS3 loop to any single building in which DS3 Loops are available as Unbundled Loops.

3.3.5 For purposes of this Section 3, a Business Line is defined in 47 C.F.R. § 51.5.

3.3.6 Notwithstanding anything to the contrary in this Agreement, and except as set forth in Section 12 below, BellSouth shall make available DS1 and DS3 Loops as described in this Section 3.3 only for Level 3's Embedded Base during the Transition Period:

3.3.6.1 DS1 Loops at any location within the service area of a wire center containing 60,000 or more Business Lines and four (4) or more fiber-based collocators.

3.3.6.2 DS3 Loops at any location within the service area of a wire center containing 38,000 or more Business Lines and four (4) or more fiber-based collocators.

3.3.7 A list of wire centers meeting the criteria set forth in Sections 3.3.6.1 and 3.3.6.2 above as ordered by the North Carolina Utilities Commission in Docket No. P-55, Sub 1549 (Initial Wire Center List), is attached to BellSouth's Carrier Notification Letter **CNL SN91086050**, dated March 10, 2006, which is available on BellSouth's Interconnection Services Web site.

3.3.8 Transition Period Pricing. From March 11, 2005, through the completion of the Transition Period, BellSouth shall charge a rate for Level 3's Embedded Base and Level 3's Excess DS1 and DS3 Loops equal to the higher of:

3.3.8.1 115% of the rate paid for that element on June 15, 2004; or

3.3.8.2 115% of a new rate the Commission establishes, if any, between June 16, 2004 and March 11, 2005.

3.3.8.3 These rates shall be as set forth in Exhibit A to Attachment 2 of the Agreement and this Section 3.3.8.

3.3.9 The Transition Period shall apply only to (1) Level 3's Embedded Base and (2) Level 3's Excess DS1 and DS3 Loops. Level 3 shall not add new DS1 or DS3 loops as described in this Section 3.3 pursuant to this Agreement, except pursuant to the self-certification process as set forth in Section 7 of this Attachment and as set forth in Section 12 below.

3.3.10 Once a wire center exceeds both of the thresholds set forth in Section 3.3.6.1 above, no future DS1 Loop unbundling will be required in that wire center.

3.3.11 Once a wire center exceeds both of the thresholds set forth in Section 3.3.6.2 above, no future DS3 Loop unbundling will be required in that wire center.

3.3.12 No later than March 10, 2006 or by other mutually agreed upon date Level 3 shall submit spreadsheet(s) identifying all of the Embedded Base of circuits and Excess DS1 and DS3 Loops to be either disconnected or converted to other BellSouth services pursuant to Section 21.1 below. The

Parties shall negotiate a project schedule for the Conversion of the Embedded Base and Excess DS1 and DS3 Loops.

3.3.13 If Level 3 fails to submit the spreadsheet(s) specified in Section 3.3.12 above for all of its Embedded Base and Excess DS1 and DS3 Loops prior to March 10, 2006 or by other mutually agreed upon date, BellSouth will identify Level 3's remaining Embedded Base and Excess DS1 and DS3 Loops, if any, and will transition such circuits to the equivalent tariffed BellSouth service(s) effective March 11, 2006. Those circuits identified and transitioned by BellSouth pursuant to this Section 3.3.13 shall be subject to all applicable disconnect charges as set forth in this Agreement and the full nonrecurring charges for installation of the equivalent tariffed BellSouth service as set forth in BellSouth's tariffs.

3.3.14 For Embedded Base circuits and Excess DS1 and DS3 Loops converted pursuant to Section 3.3.12 above or transitioned pursuant to Section 3.3.13 above, the applicable recurring tariff charge shall apply to each circuit as of March 11, 2006.

3.3.15 To the extent that Level 3 no longer desires to provide a particular service, it must notify BellSouth of its intent to discontinue and the parties must coordinate the disconnect to take place prior the conclusion of the applicable transition period. Level 3 must also adhere to Commission Rule R17-2(q) regarding the discontinuance of service to customers.

**4. Dark Fiber Loop**

4.1 Dark Fiber Loop is an unused optical transmission facility, without attached signal regeneration, multiplexing, aggregation or other electronics, from the demarcation point at an End User's premises to the End User's serving wire center. Dark Fiber Loops may be strands of optical fiber existing in aerial or underground structure. BellSouth will not provide line terminating elements, regeneration or other electronics necessary for Level 3 to utilize Dark Fiber Loops.

**4.2 Transition for Dark Fiber Loop**

4.2.1 For purposes of this Section 4, the Transition Period for Dark Fiber Loops is the eighteen (18) month period beginning March 11, 2005 and ending September 10, 2006.

4.2.2 For purposes of this Section 4, Embedded Base means Dark Fiber Loops that were in service for Level 3 as of March 10, 2005. Subsequent disconnects or loss of End Users shall be removed from the Embedded Base.

4.2.3 During the Transition Period only, BellSouth shall make available for the Embedded Base Dark Fiber Loops for Level 3 at the terms and conditions set forth in this Attachment.

4.2.4 Transition Period Pricing. From March 11, 2005, through the completion of the Transition Period, BellSouth shall charge a rate for Level 3's Embedded Base of Dark Fiber Loops equal to the higher of:

4.2.4.1 115% of the rate paid for that element on June 15, 2004; or

4.2.4.2 115% of a new rate the Commission establishes, if any, between June 16, 2004 and March 11, 2005.

4.2.4.3 These rates shall be as set forth in Exhibit A to Attachment 2 of the Agreement and this Section 4.2.4.

4.2.5 The Transition Period shall apply only to Level 3's Embedded Base and Level 3 shall not add new Dark Fiber Loops pursuant to this Agreement.

4.2.6 Effective September 11, 2006, Dark Fiber Loops will no longer be made available pursuant to this Agreement.

4.2.7 No later than June 10, 2006 Level 3 shall submit spreadsheet(s) identifying all of the Embedded Base of circuits to be either disconnected or converted to other BellSouth services as Conversions pursuant to Section 21.1 below. The Parties shall negotiate a project schedule for the Conversion of the Embedded Base.

4.2.8 If Level 3 fails to submit the spreadsheet(s) specified in Section 4.2.7 above for all of its Embedded Base prior to June 10, 2006, BellSouth will identify Level 3's remaining Embedded Base, if any, and will transition

such circuits to the equivalent tariffed BellSouth service(s) effective September 10, 2006. Those circuits identified and transitioned by BellSouth pursuant to this Section 4.2.8 shall be subject to all applicable disconnect charges as set forth in this Agreement and the full nonrecurring charges for installation of the equivalent tariffed BellSouth service as set forth in BellSouth's tariffs.

4.2.9 For Embedded Base circuits converted pursuant to Section 4.2.7 above or transitioned pursuant to Section 4.2.8 above, the applicable recurring tariff charge shall apply to each circuit as of September 11, 2006.

4.2.10 To the extent that Level 3 no longer desires to provide a particular service, it must notify BellSouth of its intent to discontinue and the parties must coordinate the disconnect to take place prior the conclusion of the applicable transition period. Level 3 must also adhere to Commission Rule R17-2(q) regarding the discontinuance of service to customers.

**5. Dedicated Transport and Dark Fiber Transport**

**5.1** **Dedicated Transport.** Dedicated Transport is defined as BellSouth's transmission facilities between wire centers or switches owned by BellSouth, or between wire centers or switches owned by BellSouth and switches owned by Level 3, including but not limited to DS1, DS3 and OCn level services, as well as dark fiber, dedicated to Level 3. BellSouth shall not be required to provide access to OCn level Dedicated Transport under any circumstances pursuant to this Agreement. In addition, except as set forth in Section 5.2 below, BellSouth shall not be required to provide to Level 3 unbundled access to interoffice transmission facilities that do not connect a pair of wire centers or switches owned by BellSouth ("Entrance Facilities").

**5.2** **Transition for DS1 and DS3 Dedicated Transport Including DS1 and DS3 Entrance Facilities**

5.2.1 For purposes of this Section 5.2, the Transition Period for the Embedded Base of DS1 and DS3 Dedicated Transport, Embedded Base Entrance Facilities and for Excess DS1 and DS3 Dedicated Transport, is the twelve (12) month period beginning March 11, 2005 and ending March 10, 2006.

5.2.2 For purposes of this Section 5.2, Embedded Base means DS1 and DS3 Dedicated Transport that were in service for Level 3 as of March 10, 2005 in those wire centers that, as of such date, met the criteria set forth in Sections 5.2.7.1 or 5.2.7.2 below. Subsequent disconnects or loss of End Users shall be removed from the Embedded Base.

5.2.3 For purposes of this Section 5.2, Embedded Base Entrance Facilities means Entrance Facilities that were in service for Level 3 as of March 10, 2005. Subsequent disconnects or loss of customers shall be removed from the Embedded Base.

5.2.4 Level 3 may obtain a maximum of twelve (12) unbundled DS3 Dedicated Transport circuits on each route where DS3 Dedicated Transport is available as a Network Element, and a maximum of ten (10) unbundled DS1 Dedicated Transport circuits on each Route where there is no 251(c)(3) unbundling obligation for DS3 Dedicated Transport but for which impairment exists for DS1 Dedicated Transport.

5.2.5 For purposes of this Section 5.2, Excess DS1 and DS3 Dedicated Transport means those Level 3 DS1 and DS3 Dedicated Transport facilities in service as of March 10, 2005, in excess of the caps set forth in Section 5.2.4 above. Subsequent disconnects and loss of End Users shall be removed from Excess DS1 and DS3 Loops.

5.2.6 For purposes of this Section 5.2, a Business Line is as defined in 47 C.F.R. § 51.5.

5.2.7 Notwithstanding anything to the contrary in this Agreement, BellSouth shall make available Dedicated Transport as described in this Section 5.2 only for Level 3's Embedded Base during the Transition Period:

5.2.7.1 DS1 Dedicated Transport where both wire centers at the end points of the route contain 38,000 or more Business Lines or four (4) or more fiber-based collocators.

5.2.7.2 DS3 Dedicated Transport where both wire centers at the end points of the route contain 24,000 or more Business Lines or three (3) or more fiber-based collocators.

5.2.7.3 A list of wire centers meeting the criteria set forth in Sections 5.2.7.1 or 5.2.7.2 above as ordered by the North Carolina Utilities Commission in Docket No. P-55, Sub 1549 (Initial Wire Center List), is attached to BellSouth's Carrier Notification Letter **CNL SN91086050**, dated March 10, 2006,, which is available on BellSouth's Interconnection Services Web site,

5.2.8 Notwithstanding anything to the contrary in this Agreement, BellSouth shall make available Entrance Facilities only for <Level 3's Embedded Base Entrance Facilities and only during the Transition Period.

5.2.9 Transition Period Pricing. From March 11, 2005, through the completion of the Transition Period, BellSouth shall charge a rate for Level 3's Embedded Base of DS1 and DS3 Dedicated Transport and for Level 3's Excess DS1 and DS3 Dedicated Transport, as described in this Section 5.2, equal to the higher of:

5.2.9.1 115% of the rate paid for that element on June 15, 2004; or

5.2.9.2 115% of a new rate the Commission establishes, if any, between June 16, 2004 and March 11, 2005.

5.2.9.3 These rates shall be as set forth in Exhibit A to Attachment 2 of the Agreement and this Section 5.2.9.

5.2.9.4 From March 11, 2005, through the completion of the Transition Period, BellSouth shall charge a rate for Level 3's Embedded Base Entrance Facilities as set forth in Exhibit __ to Attachment 2 of the Agreement and this Section 5.2.9.

5.2.10 The Transition Period shall apply only to (1) Level 3's Embedded Base and Embedded Base Entrance Facilities; and (2) Level 3's Excess DS1 and DS3 Dedicated Transport. Level 3 shall not add new Entrance Facilities pursuant to this Agreement. Further, Level 3 shall not add new

DS1 or DS3 Dedicated Transport as described in this Section 5.2 pursuant to this Agreement, except pursuant to the self-certification process as set forth in Section 7 below of and as set forth in Section 13 below.

5.2.11 Once a wire center meet or exceeds either of the thresholds set forth in Section 5.2.7.1 above, no future DS1 Dedicated Transport unbundling will be required in that wire center to other "Tier 1" wire centers, as defined by FCC rules at 47 C.F.R. 51.319 (e) (3).

5.2.12 Once a wire center meet or exceeds either of the thresholds set forth in Section 5.2.7.2 above, no future DS3 Dedicated Transport will be required in that wire center to other "Tier 1" or "Tier 2" wire centers, as defined by FCC rules at 47 C.F.R. 51.319 (e) (3).

5.2.13 No later than March 10, 2005 or by other mutually agreed upon date Level 3 shall submit spreadsheet(s) identifying all of the Embedded Base of circuits, Embedded Base Entrance Facilities, and Excess DS1 and DS3 Dedicated Transport to be either disconnected or converted to other BellSouth services pursuant to Section 21.1 below. The Parties shall negotiate a project schedule for the Conversion of the Embedded Base, Embedded Base Entrance Facilities and Excess DS1 and DS3 Dedicated Transport.

5.2.14 If Level 3 fails to submit the spreadsheet(s) specified in Section 5.2.13 above for all of its Embedded Base, Embedded Base Entrance Facilities and Excess DS1 and DS3 Dedicated Transport prior to March 10, 2006 or by other mutually agreed upon date, BellSouth will identify Level 3's remaining Embedded Base, Embedded Base Entrance Facilities and Excess DS1 and DS3 Dedicated Transport, if any, and will transition such circuits to the equivalent tariffed BellSouth service(s) effective March 11, 2006. Those circuits identified and transitioned by BellSouth pursuant to this Section 5.2.14 shall be subject to all applicable disconnect charges as set forth in this Agreement and the full nonrecurring charges for installation of the equivalent tariffed BellSouth service as set forth in BellSouth's tariffs.

5.2.15 For Embedded Base circuits, Embedded Base Entrance Facilities and Excess DS1 and DS3 Dedicated Transport converted pursuant to Section 5.2.13 or transitioned pursuant to Section 5.2.14 above, the applicable recurring tariff charge shall apply to each circuit as of March 11, 2006.

5.2.16 To the extent that Level 3 no longer desires to provide a particular service, it must notify BellSouth of its intent to discontinue and the parties must coordinate the disconnect to take place prior the conclusion of the applicable transition period. Level 3 must also adhere to Commission Rule R17-2(q) regarding the discontinuance of service to customers.

**6.** **Dark Fiber Transport.** Dark Fiber Transport is defined as Dedicated Transport that consists of unactivated optical interoffice transmission facilities without attached signal regeneration, multiplexing, aggregation or other electronics. Except as set forth in Section 6.1 below, BellSouth shall not be required to provide access to Dark Fiber Transport Entrance Facilities pursuant to this Agreement.

**6.1** **Transition for Dark Fiber Transport and Dark Fiber Transport Entrance Facilities**

6.1.1 For purposes of this Section 6, the Transition Period for the Embedded Base of Dark Fiber Transport is the eighteen (18) month period beginning March 11, 2005 and ending September 10, 2006.

6.1.2 For purposes of this Section 6, Embedded Base means Dark Fiber Transport that was in service for Level 3 as of March 10, 2005 in those wire centers that, as of such date, met the criteria set forth in 6.1.4.1. Subsequent disconnects or loss of End Users shall be removed from the Embedded Base.

6.1.3 For purposes of this Section 6.1, a Business Line is as defined in 47 C.F.R. § 51.5.

6.1.4 Notwithstanding anything to the contrary in this Agreement, BellSouth shall make available Dark Fiber Transport as described in this Section 6.1 only for Level 3's Embedded Base during the Transition Period:

6.1.4.1 Dark Fiber Transport where both wire centers at the end points of the route contain twenty-four thousand (24,000) or more Business Lines or three (3) or more fiber-based collocators.

6.1.5 A list of wire centers meeting the criteria set forth in Section 6.1.4 above as ordered by the North Carolina Utilities Commission in Docket No. P-55, Sub 1549, ("Initial List") is attached to BellSouth's Carrier Notification Letter **CNL SN91086050**, dated March 10, 2006,, which is available on BellSouth's Interconnection Services Web site.

6.1.6 Transition Period Pricing. From March 11, 2005, through the completion of the Transition Period, BellSouth shall charge a rate for Level 3's Embedded Base and Excess of Dark Fiber Transport and Embedded Base Dark Fiber Transport Entrance Facilities shall be equal to the higher of:

6.1.6.1 115% of the rate paid for that element on June 15, 2004; or

6.1.6.2 115% of a new rate the Commission establishes, if any, between June 16, 2004 and March 11, 2005.

6.1.6.3 These rates shall be as set forth in Exhibit A Attachment 2 of the Agreement and this Section 6.1.6.

6.1.7 The Transition Period shall apply only to Level 3's Embedded Base of Dark Fiber Transport and Dark Fiber Entrance Facilities. Level 3 shall not add new Dark Fiber Transport as described in this Section 6.1 except pursuant to the self-certification process as set forth in Section 7 of this Attachment and as set forth in Section 14 below. Further, Level 3 shall not add new Dark Fiber Entrance Facilities pursuant to this Agreement.

6.1.9 Once a wire center exceeds either of the thresholds set forth in Section 6.1.4 above, no future Dark Fiber Transport unbundling will be required in that wire center.

6.1.10 No later than June 10, 2006 Level 3 shall submit spreadsheet(s) identifying all of the Embedded Base of Dark Fiber Transport and Dark Fiber Entrance Facilities to be either disconnected or converted to other BellSouth services as Conversions pursuant to Section 21.1 below. The Parties shall negotiate a project schedule for the Conversion of the Embedded Base.

6.1.11 If Level 3 fails to submit the spreadsheet(s) specified in Section 6.1.10 above for all of its Embedded Base prior to June 10, 2006, BellSouth will identify Level 3's remaining Embedded Base, if any, and will transition such circuits to the equivalent tariffed BellSouth service(s) effective September 10, 2006. Those circuits identified and transitioned by BellSouth pursuant to this Section 6.1.11 shall be subject to all applicable disconnect charges as set forth in this Agreement and the full nonrecurring charges for installation of the equivalent tariffed BellSouth service as set forth in BellSouth's tariffs.

6.1.12 For Embedded Base circuits converted pursuant to Section 6.1.10 above or transitioned pursuant to Section 6.1.11 above, the applicable recurring tariff charge shall apply to each circuit as of September 11, 2006.

6.1.13 To the extent that Level 3 no longer desires to provide a particular service, it must notify BellSouth of its intent to discontinue and the parties must coordinate the disconnect to take place prior the conclusion of the applicable transition period. Level 3 must also adhere to Commission Rule R17-2(q) regarding the discontinuance of service to customers.

7. Prior to submitting an order pursuant to this Agreement for high capacity (DS1 or above) Dedicated Transport or high capacity Loops, Level 3 shall undertake a reasonably diligent inquiry to determine whether Level 3 is entitled to unbundled access to such Network Elements in accordance with the terms of this Agreement. By submitting any such order, Level 3 self-certifies that to the best of Level 3's knowledge, the high capacity Dedicated Transport or high capacity Loop requested is available as a Network Element pursuant to this Agreement. Upon receiving such order, BellSouth shall process the request in reliance upon Level 3's self-certification. To the extent BellSouth believes that such request does not comply with the terms of this Agreement, BellSouth shall seek dispute resolution in accordance with the General Terms and Conditions of this Agreement. If BellSouth prevails in such dispute resolution proceeding, Level 3 shall be liable to BellSouth for the difference between the rate for the equivalent BellSouth alternative arrangement and the self certified UNE, plus interest, on such rate differential.

**Issue 3 –What is the appropriate language to implement BellSouth's obligation to provide Section 251 unbundled access to high-capacity loops and dedicated**

**transport and how should the following terms be defined? (i) Business Line; (ii) Fiber-Based Collocator; (iii) Building (iv) Route?**

8. A Business Line is defined in 47 CFR § 51.5.

9. A Fiber-Based Collocator is defined in 47 CFR § 51.5.

10. A Building is defined as a permanent physical structure including, but not limited to, a structure in which people reside, or conduct business or work on a daily basis and through which there is one centralized point of entry in the structure through which all telecommunications services must transit. As an example only, a high rise office building with a general telecommunications equipment room through which all telecommunications services to that building's tenants must pass would be a single "building for purposes of this Attachment 2. Two or more physical areas served by a individual points of entry through which telecommunications services must transit will be considered separate buildings. For instance, a strip mall with individual businesses obtaining telecommunications services from different access points on the building(s) will be considered individual buildings, even though they might share common walls.

11. A route is defined as a transmission path between two of BellSouth's wire centers or switches. Transmission paths between identical end points are the same "route", irrespective of whether they pass through the same intermediate wire centers or switches, if any. For the purposes of determining routes wire centers include non-BellSouth locations where BellSouth has reverse collocated switches with line side functionality that terminate loops.

**Issue 6 – What language should be included in agreements to reflect the procedures identified in Matrix Item No. 5(b)?**

**12. Modifications and Updates to the Wire Center List and Subsequent Transition Periods for DS1 and/or DS3 Loops**

12.1 In the event BellSouth identifies additional wire centers that meet the criteria set forth in Section 3.3.6 above, but that were not included in the Initial Wire Center List, BellSouth shall include such additional wire centers in a carrier notification letter (CNL). Each such list of additional wire centers shall be considered a "Subsequent Wire Center List".

12.2 Effective thirty (30) business days after the date of a BellSouth CNL providing a Subsequent Wire Center List, BellSouth shall not be required to unbundle DS1 and/or DS3 Loops, as applicable, in such additional wire center(s).

12.3 For purposes of this Section 12, BellSouth shall make available DS1 and DS3 Loops that were in service for Level 3 in a wire center on the Subsequent Wire Center List as of the thirtieth ($30^{th}$) business day after the date of BellSouth's CNL identifying the Subsequent Wire Center List (Subsequent Embedded Base) until one hundred and fifty (150) days after the thirtieth business day from the date of BellSouth's CNL identifying the Subsequent Wire Center List (Subsequent Transition Period).

12.4 Subsequent disconnects or loss of End Users shall be removed from the Subsequent Embedded Base.

12.5 The rates set forth in Exhibit A Attachment 2 of the Agreement plus 15% shall apply to the Subsequent Embedded Base during the Subsequent Transition Period.

12.6 No later than forty (40) days from BellSouth's CNL identifying the Subsequent Wire Center List, Level 3 shall submit a spreadsheet(s) identifying the Subsequent Embedded Base of circuits to be disconnected or converted to other BellSouth services. The Parties shall negotiate a project schedule for the Conversion of the Subsequent Embedded Base.

12.7 If Level 3 fails to submit the spreadsheet(s) specified in Section 12.6 above for all of its Subsequent Embedded Base within forty (40) days after the date of BellSouth's CNL identifying the Subsequent Wire Center List, BellSouth will identify Level 3's remaining Subsequent Embedded Base, if any, and will transition such circuits to the equivalent tariffed BellSouth service(s). Those circuits identified and transitioned by BellSouth shall be subject to the applicable disconnect charges as set forth in this Agreement and the full nonrecurring charges for installation of the equivalent tariffed BellSouth service as set forth in BellSouth's tariffs

12.8 For Subsequent Embedded Base circuits converted pursuant to Section 12.6 above or transitioned pursuant to Section 12.7 above, the applicable

recurring tariff charges shall apply as of the earlier of the date each circuit is converted or transitioned, as applicable, or the first day after the end of the Subsequent Transition Period.

12.9 Where facilities are available, BellSouth will install Loops in compliance with BellSouth's Products and Services Interval Guide available at BellSouth's Web site. For orders of fifteen (15) or more Loops, the installation and any applicable Order Coordination as described below will be handled on a project basis, and the intervals will be set by the BellSouth project manager for that order. When Loops require a Service Inquiry (SI) prior to issuing the order to determine if facilities are available, the interval for the SI process is separate from the installation interval.

12.10 In the event that (1) BellSouth designates a wire center as non-impaired, (2) Level 3 converts existing UNEs to other services or orders new services as services other than UNEs, (3) Level 3 otherwise would have been entitled to UNEs in such wire center at the time alternative services provisioned, and (4) BellSouth acknowledges or a state or federal agency regulatory body with authority determines that, at the time BellSouth designated such wire center as non-impaired, such wire center did not meet the FCC's non-impairment criteria, then upon request of Level 3, BellSouth shall transition to UNEs any alternative services in such wire center that were established after such wire center was designated as non-impaired. In such instances, BellSouth shall refund Level 3 the difference between the rate paid by Level 3 for such services and the applicable UNE rate, including but not limited to any charges associated with the unnecessary conversion from UNE to other wholesale services.

## 13. Modifications and Updates to the Wire Center List and Subsequent Transition Periods for DS1 and/or DS3 Transport

13.1 In the event BellSouth identifies additional wire centers that meet the criteria set forth in Sections 5.2.11 or 5.2.12 above, but that were not included in the Initial Wire Center List, BellSouth shall include such additional wire centers in CNL. Each such list of additional wire centers shall be considered a Subsequent Wire Center List.

13.2 Effective thirty (30) business days after the date of a BellSouth CNL providing a Subsequent Wire Center List, BellSouth shall not be required to provide DS1 and DS3 Dedicated Transport, as applicable, in such additional wire center(s).

13.3 For purposes of this Section 13, BellSouth shall make available DS1 and DS3 Dedicated Transport that was in service for Level 3 in a wire center on the Subsequent Wire Center List as of the thirtieth ($30^{th}$) business day after the date of BellSouth's CNL identifying the Subsequent Wire Center List (Subsequent Embedded Base) until one hundred and fifty (150) days

after the thirtieth (30th) business day from the date of BellSouth's CNL identifying the Subsequent Wire Center List (Subsequent Transition Period).

13.4 Subsequent disconnects or loss of End Users shall be removed from the Subsequent Embedded Base.

13.5 The rates set forth in Exhibit A Attachment 2 of the Agreement plus 15% shall apply to the Subsequent Embedded Base during the Subsequent Transition Period.

13.6 No later than forty (40) days from BellSouth's CNL identifying the Subsequent Wire Center List Level 3 shall submit a spreadsheet(s) identifying the Subsequent Embedded Base of circuits to be disconnected or converted to other BellSouth services. The Parties shall negotiate a project schedule for the Conversion of the Subsequent Embedded Base.

13.7 If Level 3 fails to submit the spreadsheet(s) specified in Section 13.6 above for all of its Subsequent Embedded Base within forty (40) days after the date of BellSouth's CNL identifying the Subsequent Wire Center List, BellSouth will identify Level 3's remaining Subsequent Embedded Base, if any, and will transition such circuits to the equivalent tariffed BellSouth service(s). Those circuits identified and transitioned by BellSouth shall be subject to the applicable disconnect charges as set forth in this Agreement and the full nonrecurring charges for installation of the equivalent tariffed BellSouth service as set forth in BellSouth's tariffs.

13.8 For Subsequent Embedded Base circuits converted pursuant to Section 13.6 above or transitioned pursuant to Section 13.7 above, the applicable recurring tariff charges shall apply as of the earlier of the date each circuit is converted or transitioned, as applicable, or the first day after the end of the Subsequent Transition Period.

13.9 In the event that (1) BellSouth designates a wire center as non-impaired, (2) Level 3 converts existing UNEs to other services or orders new services as services other than UNEs, (3) Level 3 otherwise would have been entitled to UNEs in such wire center at the time alternative services provisioned, and (4) BellSouth acknowledges or a state or federal agency regulatory body with authority determines that, at the time BellSouth designated such wire center as non-impaired, such wire center did not meet the FCC's non-impairment criteria, then upon request of Level 3, BellSouth shall transition to UNEs any alternative services in such wire center that were established after such wire center was designated as non-impaired. In such instances, BellSouth shall refund Level 3 the difference between the rate paid by Level 3 for such services and the applicable UNE rate, including but not limited to any charges associated with the unnecessary conversion from UNE to other wholesale services.

**14. Modifications and Updates to the Wire Center List and Subsequent Transition Periods for Dark Fiber Transport**

14.1 In the event BellSouth identifies additional wire centers that meet the criteria set forth in Section 6 above, but that were not included in the Initial Wire Center List, BellSouth shall include such additional wire centers in a CNL. Each such list of additional wire centers shall be considered a "Subsequent Wire Center List".

14.2 Effective thirty (30) business days after the date of a BellSouth CNL providing a Subsequent Wire Center List, BellSouth shall not be required to provide unbundled access to Dark Fiber Transport, as applicable, in such additional wire center(s), except pursuant to the self-certification process as set forth in Section 7 above.

14.3 For purposes of this Section 14, BellSouth shall make available DS1 and DS3 Loops that were in service for Level 3 in a wire center on the Subsequent Wire Center List as of the thirtieth ($30^{th}$) business day after the date of BellSouth's CNL identifying the Subsequent Wire Center List (Subsequent Embedded Base) until one hundred and fifty (150) days after the thirtieth ($30^{th}$) business day from the date of BellSouth's CNL identifying the Subsequent Wire Center List (Subsequent Transition Period).

14.4 Subsequent disconnects or loss of End Users shall be removed from the Subsequent Embedded Base.

14.5 The rates set forth in Exhibit A Attachment 2 of the Agreement plus 15% shall apply to the Subsequent Embedded Base during the Subsequent Transition Period.

14.6 No later than forty (40) days from BellSouth's CNL identifying the Subsequent Wire Center List Level 3 shall submit a spreadsheet(s) identifying the Subsequent Embedded Base of circuits to be disconnected or converted to other BellSouth services. The Parties shall negotiate a project schedule for the Conversion of the Subsequent Embedded Base.

14.7 If Level 3 fails to submit the spreadsheet(s) specified in Section 14.6 above for all of its Subsequent Embedded Base within forty (40) days after the date of BellSouth's CNL identifying the Subsequent Wire Center List, BellSouth will identify Level 3's remaining Subsequent Embedded Base, if any, and will transition such circuits to the equivalent tariffed BellSouth service(s). Those circuits identified and transitioned by BellSouth shall be subject to the applicable disconnect charges as set forth in this Agreement and the full nonrecurring charges for installation of the equivalent tariffed BellSouth service as set forth in BellSouth's tariffs.

14.8 For Subsequent Embedded Base circuits converted pursuant to Section 14.6 above or transitioned pursuant to Section 14.7 above, the applicable recurring tariff charges shall apply as of the earlier of the date each circuit

is converted or transitioned, as applicable, or the first day after the end of the Subsequent Transition Period.

14.9 In the event that (1) BellSouth designates a wire center as non-impaired, (2) Level 3 converts existing UNEs to other services or orders new services as services other than UNEs, (3) Level 3 otherwise would have been entitled to UNEs in such wire center at the time alternative services provisioned, and (4) BellSouth acknowledges or a state or federal agency regulatory body with authority determines that, at the time BellSouth designated such wire center as non-impaired, such wire center did not meet the FCC's non-impairment criteria, then upon request of Level 3, BellSouth shall transition to UNEs any alternative services in such wire center that were established after such wire center was designated as non-impaired. In such instances, BellSouth shall refund Level 3 the difference between the rate paid by Level 3 for such services and the applicable UNE rate, including but not limited to any charges associated with the unnecessary conversion from UNE to other wholesale services.

**Issue 7 – Are HDSL-capable copper loops the equivalent of DS1 loops for the purpose of evaluating impairment?**

15. 2-wire or 4-wire HDSL-Compatible Loop. This is a designed Loop that meets Carrier Serving Area (CSA) specifications, may be up to 12,000 feet long and may have up to 2,500 feet of bridged tap (inclusive of Loop length). It may be a 2-wire or 4-wire circuit and will come standard with a test point, OC, and a DLR.

16. 4-wire Unbundled DS1 Digital Loop.

This is a designed 4-wire Loop that is provisioned according to industry standards for DS1 or Primary Rate ISDN services and will come standard with a test point, OC, and a DLR. A DS1 Loop may be provisioned over a variety of loop transmission technologies including copper, HDSL-based technology or fiber optic transport systems. It will include a 4-wire DS1 Network Interface at the End User's location.

**Issue 8 – (a) Does the Commission have the authority to require BellSouth to include in its ICAs entered into pursuant to Section 252, network elements either under state law o pursuant to Section 271 or any other federal law other than Section 251? (b) If the answer to part (a) is affirmative in any respect, does the Commission have the authority to establish rates for such element? (c) If the answer to part (a) or (b) is affirmative in any respect, (i) what language, if any should be included in the ICA with regard to the rates for such elements, and (ii) what language, if any, should be included in the ICA with regard to the terms and conditions of such elements?**

17. This Attachment sets forth rates, terms and conditions for unbundled network elements (Network Elements) and combinations of Network Elements (Combinations) that BellSouth offers to Level 3 for Level 3's provision of Telecommunications Services in accordance with its obligations under Section 251(c)(3) of the Act.

**Issue 9 – What conditions, if any, should be imposed on moving, adding, or changing orders to a CLP's respective embedded base of switching, high-capacity loops, and dedicated transport, and what is the appropriate language to implement such conditions, if any?**

18. For the state of North Carolina, during the Transition Period, CLEC shall be entitled to order and BellSouth shall provision UNE-P that CLEC orders for the purpose of serving CLEC's existing UNE-P End Users as of March 10, 2005`

**Issue 10 – What rates terms and conditions should govern the transition of existing network elements that BellSouth is no longer obligated to provide as Section 251 UNEs to non-Section 251 network elements and other services and (a) what is the proper treatment for such network elements at the end of the transition period,; and (b) what is the appropriate transition period, and what are the appropriate rates, terms and conditions during such transition period, for unbundled high-capacity loops, high capacity transport, and dark fiber transport in and between wire that do not meet the FCC's non-impairment standards at this time, but that meet such standards in the future?**

19. Effective March 11, 2006, and except to the extent expressly provided otherwise in this Attachment, Level 3 may not maintain unbundled network elements or combinations of unbundled network elements, that are no longer offered pursuant to this Agreement (collectively "Arrangements"). In the event BellSouth determines that Level 3 has in place any Arrangements after the Effective Date of this Agreement, BellSouth will provide Level 3 with thirty (30) days written notice to disconnect or convert such Arrangements. If Level 3 fails to submit orders to disconnect or convert such Arrangements within such thirty (30) day period, BellSouth will transition such circuits to the equivalent tariffed BellSouth service(s). Those circuits identified and transitioned by BellSouth pursuant to this Section 19 shall be subject to applicable switch-as-is charges.

**Issue 13 – What is the scope of commingling allowed under the FCC's rules and orders and what language should be included in Interconnection Agreements to implement commingling (including rates)?**

20. **Commingling of Services**

20.1 Commingling means the connecting, attaching, or otherwise linking of a Network Element, or a Combination, to one or more Telecommunications Services or facilities that Level 3 has obtained at wholesale from BellSouth, or the combining of a Network Element or Combination with one or more such wholesale Telecommunications Services or facilities consistent with the NCUC's Order dated March 1, 2006 in Docket No. P-55, Sub 1549. Level 3 must comply with all rates, terms or conditions applicable to such wholesale Telecommunications Services or facilities.

20.2 Subject to the limitations set forth elsewhere in this Attachment, BellSouth shall not deny access to a Network Element or a Combination on the grounds that one or more of the elements: (1) is connected to, attached to, linked to, or combined with such a facility or service obtained from BellSouth; or (2) shares part of BellSouth's network with access services or inputs for mobile wireless services and/or interexchange services.

20.3 Unless otherwise agreed to by the Parties, the Network Element portion of a commingled circuit will be billed at the rates set forth in Exhibit A and the remainder of the circuit or service will be billed in accordance with BellSouth's tariffed rates or rates set forth in a separate agreement between the Parties.

20.4 When multiplexing equipment is attached to a commingled circuit, the multiplexing equipment will be billed from the same agreement or tariff as the higher bandwidth circuit. Central Office Channel Interfaces (COCI) will be billed from the same agreement or tariff as the lower bandwidth circuit.

20.5 Terms and conditions for order cancellation charges and Service Date Advancement Charges will apply in accordance with Attachment 6 and are incorporated herein by this reference. The charges shall be as set forth in Exhibit A to Attachment 2 of the Agreement.

**Issue 14 – Is BellSouth required to provide conversion of special access circuits to UNE pricing, and, if so, at what rates, terms and conditions and during what timeframe should such new requests for such conversions be effectuated?**

**Issue 15 – What are the appropriate rates, terms and conditions and effective dates, if any, for conversion requests that were pending on the effective date of the TRO?**

## 21. Conversion of Wholesale Services to Network Elements or Network Elements to Wholesale Services.

21.1 Upon request, BellSouth shall convert a wholesale service, or group of wholesale services, to the equivalent Network Element or Combination that is available to Level 3 pursuant to this Agreement, or convert a Network Element or Combination that is available to Level 3 under this Agreement to an equivalent wholesale service or group of wholesale services offered by BellSouth (collectively "Conversion"). BellSouth shall charge the applicable nonrecurring switch-as-is rates for Conversions to specific Network Elements or Combinations found in Exhibit A. BellSouth shall also charge the same nonrecurring switch-as-is rates when converting from Network Elements or Combinations. Any rate change resulting from the Conversion will be effective as of the next billing cycle following BellSouth's receipt of a complete and accurate Conversion request from the CLEC. A Conversion shall be considered termination for purposes of any volume and/or term commitments and/or grandfathered status between CLEC and BellSouth. Any change from a wholesale service/group of wholesale services to a Network Element/Combination, or from a Network Element/Combination to a wholesale service/group of wholesale services that requires a physical rearrangement will not be considered to be a Conversion for purposes of this Agreement. BellSouth shall not require physical rearrangements if the Conversion can be completed through record changes only. Orders for Conversions will be handled in accordance with the guidelines set forth in the Ordering Guidelines and Processes and CLEC Information Packages as referenced in Section 21.3 below.

21.2 To the extent, Level 3 had a Conversion request pending between October 2, 2003 and the effective date of this Amendment, such Conversion shall be deemed converted as of the date of such request.

**21.3 Ordering Guidelines and Processes**

21.3.1 For information regarding Ordering Guidelines and Processes for various Network Elements, Combinations and Other Services, Level 3 should refer to the "Guides" section of the BellSouth Interconnection Web site.

21.3.2 Additional information may also be found in the individual CLEC Information Packages located at the "CLEC UNE Products" on BellSouth's Interconnection Web site at: www.interconnection.bellsouth.com/guides/html/unes.html.

21.3.3 The provisioning of Network Elements, Combinations and Other Services to Level 3's Collocation Space will require cross-connections within the central office to connect the Network Element, Combinations or Other Services to the demarcation point associated with Level 3's Collocation Space. These cross-connects are separate components that are not considered a part of the Network Element, Combinations or Other Services and, thus, have a separate charge pursuant to this Agreement.

**Issue 16: LINE SHARING**: Is BellSouth obligated pursuant to the Telecommunications Act of 1996 and FCC Orders to provide line sharing to new CLEC customers after October 1, 2004?

**Issue 17: LINE SHARING – TRANSITION**: If the answer to foregoing issue is negative, what is the appropriate language for transitioning off a CLEC's existing line sharing arrangements?

22. Line Sharing

22.1 General**.** Line Sharing is defined as the process by which Level 3 provides digital subscriber line service ("xDSL") over the same copper Loop that BellSouth uses to provide retail voice service, with BellSouth using the low frequency portion of the Loop and Level 3 using the high frequency spectrum (as defined below) of the Loop.

22.1.1 Line Sharing arrangements in service as of October 1, 2003 under a prior Interconnection Agreement between Bellsouth and Level 3, will remain in effect until the End User discontinues or moves xDSL service with Level 3. Arrangements pursuant to this Section will be billed at the rates set forth in Exhibit B**.**

22.1.2 For Line Sharing arrangements placed in service between October 2, 2003, and October 1, 2004 the rates will be as set forth in Exhibit B**.**

22.1.3 For Line Sharing arrangements placed on or after October 2, 2004 (whether under this Agreement only, or under this Agreement and a prior Agreement), the rates will be the full copper loop rate as set forth in Exhibit B.

22.1.4 Any Line Sharing arrangements placed in service on or after October 2, 2003; and not otherwise terminated, shall terminate on October 2, 2006.

22.1.5 No new line sharing arrangements may be ordered.

22.1.6 The High Frequency Spectrum is defined as the frequency range above the voiceband on a copper Loop facility carrying analog circuit-switched voiceband transmissions. Access to the High Frequency Spectrum is intended to allow Level 3 the ability to provide xDSL data services to the End User for which BellSouth provides voice services.

22.1.7 The High Frequency Spectrum shall be available for any version of xDSL complying with Spectrum Management Class *5* of ANSI TI.417**,** American National Standard for Telecommunications, Spectrum Management for Loop Transmission Systems. BellSouth will continue to have access to the low frequency portion of the Loop spectrum (from 300

Hertz to at least 3000 Hertz, and potentially up to 3400 Hertz, depending on equipment and facilities) for the purposes of providing voice service. Level 3 shall only use xDSL technology that is within the PSD mask for Spectrum Management Class *5* as found in the abovementioned document.

22.1.8 Access to the High Frequency Spectrum requires an unloaded, 2-wire copper Loop. An unloaded Loop is a copper Loop with no load coils, lowpass filters, range extenders, DAMLs, or similar devices and minimal bridged taps consistent with ANSI T1.413 and TI .601.

22.1.9 BellSouth will provide Loop Modification to Level 3 on an existing Loop for Line Sharing in accordance with procedures as specified in Attachment 2 of this Agreement. BellSouth is not required to modify a Loop for access to the High Frequency spectrum if modification of that Loop significantly degrades BellSouth's voice service. If Level 3 requests that BellSouth modify a Loop and such modification significantly degrades the voice services on the Loop, Level 3 shall pay for the Loop to be restored to its original state.

22.1.10 Line Sharing shall only be available on Loops on which BellSouth is also providing, and continues to provide, analog voice service directly to the End User. In the event the End User terminates its BellSouth provided voice service for any reason, or in the event BellSouth disconnects the End User's voice service pursuant to its tariffs or applicable law, and Level 3 desires to continue providing xDSL service on such Loop, Level 3 or the new voice provider, or both, shall be required to purchase a full stand-alone Loop. In those cases in which BellSouth no longer provides voice service to the End User and Level 3 purchases the full stand-alone Loop, Level 3 may elect the type of Loop it will purchase. Level 3 will pay the appropriate recurring and nonrecurring rates for such Loop as set forth in Exhibit A to Attachment 2 of the Agreement. In the event Level 3 purchases a voice grade Loop, Level 3 acknowledges that such Loop may not remain xDSL compatible.

22.1.11 In the event the End User terminates its BellSouth provided voice service, and Level 3 requests BellSouth to convert the Line Sharing arrangement to a Line Splitting arrangement (see below), BellSouth will discontinue billing Level 3 for the High Frequency Spectrum and begin billing Level 3 for the full stand-alone Loop. Only one CLEC shall be permitted access to the High Frequency Spectrum of any particular Loop.

22.1.12 Once BellSouth has placed cross-connects on behalf of Level 3 to provide Level 3 access to the High Frequency Spectrum and chooses to rearrange its splitter or CLEC pairs, Level 3 may order the rearrangement of its splitter or cable pairs via "Subsequent Activity". Subsequent Activity is any rearrangement of Level 3's cable pairs or splitter ports after BellSouth has

placed cross-connection to provide Level 3 access to the High Frequency Spectrum. BellSouth shall bill and Level 3 shall pay the Subsequent Activity charges as set forth in Exhibit A to Attachment 2 of the Agreement.

22.1.13 BellSouth's Local Ordering Handbook (LOH) will provide Level 3 the LSR format to be used when ordering disconnections of the High Frequency Spectrum or Subsequent Activity.

22.1.14 Maintenance and Repair - Line Sharing. Level 3 shall have access for repair and maintenance purposes to any Loop for which it has access to the High Frequency Spectrum. Level 3 may test from the collocation space, the Termination Point, or the NID. BellSouth will be responsible for repairing voice services and the physical line between the NID at the End User's premises and the Termination Point. Level 3 will be responsible for repairing its data services. Each Party will be responsible for maintaining its own equipment.

22.1.15 Level 3 shall inform its End Users to direct data problems to Level 3, unless both voice and data services are impaired, in which event Level 3 should direct the End Users to contact BellSouth. Once a Party has isolated a trouble to the other Party's portion of the Loop, the Party isolating the trouble shall notify the End User that the trouble is on the other Party's portion of the Loop.

**Issue 18: LINE SPLITTING**: What is the appropriate ICA language to implement BellSouth's obligations with regard to line splitting?

**23. Line Splitting**

23.1 Line splitting shall mean that Level 3 purchases a whole loop and provides the splitter to provide voice and data services through an arrangement with a third party CLEC, who is either the provider of data services (Data CLEC) or the provider of voice services (Voice CLEC), to deliver voice and data service to End Users over the same Loop. The Voice CLEC and Data CLEC are different carriers, with Level 3 being either the Voice CLEC or Data CLEC.

23.2 Line Splitting – UNE-L. In the event Level 3 provides its own switching or obtains switching from a third party, Level 3 may engage in line splitting arrangements with another CLEC using a splitter, provided by Level 3, in a Collocation Space at the central office where the loop terminates into a distribution frame or its equivalent.

23.3 Line Splitting – Loop and Port

To the extent Level 3 is using a commingled arrangement that consists of an Unbundled Loop purchased pursuant to this Agreement and Local Switching provided by BellSouth pursuant to Section 271, BellSouth will permit Level 3 to utilize Line Splitting. BellSouth shall charge the rates previously approved by the North Carolina Utilities Commission as set forth in Exhibit A of Attachment 2 in the Agreement.

23.4 Level 3 shall provide BellSouth with a signed LOA between it and the third party CLEC (Data **C**LEC or Voice CLEC) with which it desires to provision Line Splitting services, where Level 3 will not provide voice and data services.

23.5 Provisioning Line Splitting and Splitter Space – Loop and Port

23.5.1 The Data LEC, Voice CLEC, or a third party may provide the splitter. When Level 3 or its authorized agent owns the splitter, Line Splitting requires the following: a non-designed analog Loop from the serving wire center to the NID at the End User's location; a collocation cross-connection connecting the Loop to the collocation space; and a second collocation cross-connection from the collocation space connected to a voice port.

23.5.2 An unloaded 2-wire copper Loop must serve the End User. The meet point for the Voice CLEC and the Data CLEC is the point of termination on the MDF for the Data CLEC's cable and pairs.

23.5.3 The foregoing procedures are applicable to migration from a UNE-P arrangement to Line Splitting Service, including a Line splitting service that includes a commingled arrangement of Loop and unbundled local switching pursuant to Section 271.

23.5.4 Provisioning Line Splitting and Splitter Space – UNE-L

23.5.4.1 **Level 3** provides the splitter when providing Line Splitting with UNE-L. When Level 3 or its authorized agent owns the splitter, Line Splitting requires the following: a loop from NID at the End User's location to the serving wire center and terminating into a distribution frame or its equivalent.

23.6 Maintenance – Line Splitting – Loop and Port and UNE-L

23.6.1 BellSouth will be responsible for repairing voice troubles and the troubles with the physical loop between the NID at the End User's premises and the termination point.

23.6.2 BellSouth must make all necessary network modifications, including providing nondiscriminatory access to operations support systems necessary for pre-ordering, ordering, provisioning, maintenance and repair, and billing for loops used in line splitting arrangements.

23.7 Indemnity

23.7.1 Level 3 shall indemnify, defend and hold harmless BellSouth from and against any claims, losses, damages and costs, which arise out of actions related to the other service provider, except to the extent caused by BellSouth's gross negligence or willful misconduct.

**Issue 19 – What is the appropriate ICA language, if any, to address call related databases?**

24. Call Related Databases and Signaling

24.1 Except for 911 and E911, BellSouth is not required to provide unbundled access to call related databases pursuant to Section 251.

**24.2 Automatic Location Identification/Data Management System**

24.2.1 911 and E911 Databases

24.2.1.1 BellSouth shall provide Level 3 with nondiscriminatory access to 911 and E911 databases on an unbundled basis, in accordance with 47 C.F.R. § 51.319 (f).

24.2.1.1 The ALI/DMS database contains End User information (including name, address, telephone information, and sometimes special information from the local service provider or End User) used to determine to which PSAP to route the call. The ALI/DMS database is used to provide enhanced routing flexibility for E911. Level 3 will be required to provide the BellSouth 911 database vendor daily service order updates to E911 database in accordance with Section 24.3.1 below.

24.3 Technical Requirements

24.3.1 BellSouth's 911 database vendor shall provide Level 3 the capability of providing updates to the ALI/DMS database through a specified electronic interface. Level 3 shall contact BellSouth's 911 database vendor directly to request interface. Level 3 shall provide updates directly to BellSouth's 911 database vendor on a daily basis. Updates shall be the responsibility of Level 3 and BellSouth shall not be liable for the transactions between Level 3 and BellSouth's 911 database vendor.

24.3.2 It is Level 3's responsibility to retrieve and confirm statistical data and to correct errors obtained from BellSouth's 911 database vendor on a daily basis. All errors will be assigned a unique error code and the description of the error and the corrective action is described in the CLEC Users Guide for Facility Based Providers that is found on the BellSouth Interconnection Web site.

24.3.3 Level 3 shall conform to the BellSouth standards as described in the CLEC Users Guide to E911 for Facilities Based Providers that is located on the BellSouth's Interconnection Web site: www.interconnection.bellsouth.com/guides.

24.3.4 Stranded Unlocks are defined as End User records in BellSouth's ALI/DMS database that have not been migrated for over ninety (90) days

to Level 3, as a new provider of local service to the End User. Stranded Unlocks are those End User records that have been "unlocked" by the previous local exchange carrier that provided service to the End User and are open for Level 3 to assume responsibility for such records.

24.3.5 Based upon End User record ownership information available in the NPAC database, BellSouth shall provide a Stranded Unlock annual report to Level 3 that reflects all Stranded Unlocks that remain in the ALI/DMS database for over ninety (90) days. Level 3 shall review the Stranded Unlock report, identify its End User records and request to either delete such records or migrate the records to Level 3 within two (2) months following the date of the Stranded Unlock report provided by BellSouth. Level 3 shall reimburse BellSouth for any charges BellSouth's database vendor imposes on BellSouth for the deletion of Level 3's records.

24.4 911 PBX Locate Service®. 911 PBX Locate Service is comprised of a database capability and a separate transport component.

24.4.1 Description of Product. The transport component provides a dedicated trunk path from a Private Branch Exchange (PBX) switch to the appropriate BellSouth 911 tandem.

24.4.1.1 The database capability allows Level 3 to offer an E911 service to its PBX End Users that identifies to the PSAP the physical location of the Level 3 PBX 911 End User station telephone number for the 911 call that is placed by the End User.

24.4.2 Level 3 may order either the database capability or the transport component as desired or Level 3 may order both components of the service.

24.4.3 911 PBX Locate Database Capability. Level 3's End User or Level 3's End User's database management agent (DMA) must provide the End User PBX station telephone numbers and corresponding address and location data to BellSouth's 911 database vendor. The data will be loaded and maintained in BellSouth's ALI database.

24.4.4 Ordering, provisioning, testing and maintenance shall be provided by Level 3 pursuant to the 911 PBX Locate Marketing Service Description (MSD) that is located on the BellSouth Interconnection Web site.

24.4.5 Level 3's End User, or Level 3's End User database management agent must provide ongoing updates to BellSouth's 911 database vendor within a commercially reasonable timeframe of all PBX station telephone number adds, moves and deletions. It will be the responsibility of Level 3 to ensure that the End User or DMA maintain the data pertaining to each End User's extension managed by the 911 PBX Locate Service product. Level 3 should not submit telephone number updates for specific PBX station telephone numbers that are submitted by Level 3's End User, or Level 3's End User DMA under the terms of 911 PBX Locate product.

24.4.6 Level 3 must provision all PBX station numbers in the same LATA as the E911 tandem.

24.4.7 Level 3 agrees to release, indemnify, defend and hold harmless BellSouth from any and all loss, claims, demands, suits, or other action, or any liability whatsoever, whether suffered, made, instituted or asserted by Level 3's End User or by any other party or person, for any personal injury to or death of any person or persons, or for any loss, damage or destruction of any property, whether owned by Level 3 or others, or for any infringement or invasion of the right of privacy of any person or persons, caused or claimed to have been caused, directly or indirectly, by the installation, operation, failure to operate, maintenance, removal, presence, condition, location or use of PBX Locate Service features or by any services which are or may be furnished by BellSouth in connection therewith, including but not limited to the identification of the telephone number, address or name associated with the telephone used by the party or parties accessing 911 services using 911 PBX Locate Service hereunder, except to the extent caused by BellSouth's gross negligence or wilful misconduct. Level 3 is responsible for assuring that its authorized End Users comply with the provisions of these terms and that unauthorized persons do not gain access to or use the 911 PBX Locate Service through user names, passwords, or other identifiers assigned to Level 3's End User or DMA pursuant to these terms. Specifically, Level 3's End User or DMA must keep and protect from use by any unauthorized individual identifiers, passwords, and any other security token(s) and devices that are provided for access to this product.

24.4.8 Level 3 may only use BellSouth PBX Locate Service solely for the purpose of validating and correcting 911 related data for Level 3's End Users' telephone numbers for which it has direct management authority.

24.4.9 <u>911 PBX Locate Transport Component.</u> The 911 PBX Locate Service transport component requires Level 3 to order a CAMA type dedicated trunk from Level 3's End User premise to the appropriate BellSouth 911 tandem pursuant to the following provisions.

24.4.10 Except as otherwise set forth below, a minimum of two (2) End User specific, dedicated 911 trunks are required between the Level 3's End User premise and the BellSouth 911 tandem as described in BellSouth's Technical Reference (TR) 73576 and in accordance with the 911 PBX Locate Marketing Service Description located on the BellSouth Interconnection Web site. Level 3 is responsible for connectivity between the End User's PBX and Level 3's switch or POP location. Level 3 will then order 911 trunks from their switch or POP location to the BellSouth 911 tandem. The dedicated trunks shall be, at a minimum, DS0 level trunks configured as part of a digital interface (delivered over a Level 3 purchased DS1 facility that hands off at a DS1 or higher level digital or optical interface). Level 3 is responsible for ensuring that the PBX switch is capable of sending the calling station's Direct Inward Dial (DID)

telephone number to the BellSouth 911 tandem in a specified Multi-frequency (MF) Address Signaling Protocol. If the PBX switch supports Primary Rate ISDN (PRI) and the calling stations are DID numbers, then the 911call can be transmitted using PRI, and there will be no requirement for the PBX Locate Transport component.

24.4.11 Ordering and Provisioning. Level 3 will submit an Access Service Request (ASR) to BellSouth to order a minimum of two (2) End User specific 911 trunks from its switch or POP location to the BellSouth 911 tandem.

24.4.12 Testing and maintenance shall be provided by Level 3 pursuant to the 911 PBX Locate Marketing Service description that is located on the BellSouth Interconnection Web site.

24.4.13 Rates. Rates for the 911 PBX Locate Service database component are set forth in Exhibit A or C. Trunks and facilities for 911 PBX Locate transport component may be ordered by Level 3 pursuant to the terms and conditions set forth in Attachment 3.

**Issue 20 - What is the appropriate language to implement BellSouth's obligation, if any, to offer unbundled access to newly deployed or "greenfield" fiber loops, including fiber loops deployed to the minimum point of entry (MPOE) of a multiple dwelling unit that is predominantly residential and what, if any impact does the ownership of the inside wiring from the MPOE to each end user have one this obligation?**

25.1 Fiber to the Home (FTTH) loops are local loops consisting entirely of fiber optic cable, whether dark or lit, serving an End User's premises or, in the case of predominantly residential multiple dwelling units (MDUs), a fiber optic cable, whether dark or lit, that extends to the MDU minimum point of entry (MPOE). Fiber to the Curb loops are local loops consisting of fiber optic cable connecting to a copper distribution plant that is not more than five hundred (500) feet from the End User's premises or, in the case of predominantly residential MDUs, not more than five hundred (500) feet from the MDU's MPOE. The fiber optic cable in a FTTC loop must connect to a copper distribution plant at a serving area interface from which every other copper distribution subloop also is not more than five hundred (500) feet from the respective End User's premises. BellSouth shall offer CLPs unbundled access to FTTH/FTTC loops serving enterprise customers and predominantly business MDUs.

25.2 In new build (Greenfield) areas, where BellSouth has only deployed FTTH/FTTC facilities, BellSouth is under no obligation to provide such FTTH and FTTC Loops. FTTH facilities include fiber loops deployed to the MPOE of a MDU that is predominantly residential regardless of the ownership of the inside wiring from the MPOE to each End User in the MDU.

25.3 Notwithstanding the above, nothing in this Section shall limit BellSouth's obligation to offer CLECs an unbundled DS1 loop (or loop/transport combination) in any wire center where BellSouth is required to provide unbundled access to DS1 loops and loop/transport combinations

**Issue 21: What is the appropriate ICA language to implement BellSouth's obligation to provide unbundled access to hybrid loops?**

26. A hybrid loop is a local loop, composed of both fiber optic cable usually in the feeder plant and copper twisted wire or cable usually in the distribution plant. BellSouth shall provide unbundled access to hybrid loops pursuant to the requirements of 47 C.F.R. 51.319(a)(2).

**Issue 22: What is the appropriate ICA language to implement BellSouth's obligation to provide RNMs?**

**Issue 23: What is the appropriate process for establishing a rate, if any, to allow for the cost of a routine network modification that is not already recovered in Commission-approved recurring and nonrecurring rates? What is the appropriate language, if any, to incorporate into the ICAs?**

27. Routine Network Modifications

27.1 BellSouth will perform Routine Network Modifications (RNM) in accordance with FCC 47 CFR 51.319 (a)(7) and (e)(4) for Loops and Dedicated Transport provided under this Attachment. If BellSouth performs such RNM during normal operations and has recovered the costs for performing such modifications through the rates set forth in Exhibit A Attachment 2 of the Agreement, then BellSouth will perform such RNM at no additional charge.

27.2 RNM shall be performed within the intervals established for the Network Element and subject to the performance measurements and associated remedies set forth in Attachment 9 of this Agreement. If BellSouth has not recovered the costs of such RNM in the rates set forth in Exhibit A to Attachment 2 of the Agreement, then such request will be handled as a project on an individual case basis. BellSouth will provide a price quote for the request and, upon receipt of payment from Level 3, BellSouth will perform the RNM.

**Issue 24: What is the appropriate language, if any, to address access to overbuild deployments of fiber to the home and fiber to the curb facilities?**

28. In FTTH/FTTC overbuild situations where BellSouth also has copper Loops, BellSouth may make those copper Loops available to Level 3 on an unbundled basis, pursuant to the requirements of 47 C.F.R. § 51.319(a)(3)(iii), BellSouth's retirements of copper loops or copper subloops must comply with the requirements of 47 C.F.R. § 51.319(a)(3)(iv).

**Issue 25: What is the appropriate ICA language to implement BellSouth's EEL audit rights, if any, under the TRO?**

EELs Audit provisions

29.1 BellSouth may, on an annual basis audit Level 3's records in order to verify compliance with the high capacity EEL eligibility criteria. To invoke its limited right to audit, BellSouth will send a Notice of Audit to Level 3 stating its concern that Level 3 is not complying with the service eligibility requirements as set forth above and a concise statement of the reasons therefore. Such Notice of Audit will be delivered to Level 3 no less than thirty (30) calendar days prior to the date upon which BellSouth seeks to commence an audit. BellSouth is not required to provide documentation, as distinct from a statement of concern, to support its basis for an audit, or seek the concurrence of the requesting carrier before selecting the location of the audit.

29.2 The audit shall be conducted by a third party independent auditor, retained and paid for by BellSouth. BellSouth may select the independent auditor without the prior approval of Level 3 or the Commission. Challenges to the independence of the auditor may be filed with the Commission only after the audit has been concluded. The audit must be performed in accordance with the standards established by the American Institute for Certified Public Accountants (AICPA) which will require the auditor to perform an "examination engagement" and issue an opinion regarding Level 3's compliance with the high capacity EEL eligibility criteria. AICPA standards and other AICPA requirements will be used to determine the independence of an auditor. The independent auditor's report will conclude whether Level 3 complied in all material respects with the applicable service eligibility criteria. Consistent with standard auditing practices, such audits require compliance testing designed by the independent auditor.

29.3 To the extent the independent auditor's report concludes that Level 3 failed to comply with the service eligibility criteria, Level 3 must true-up any difference in payments, convert all noncompliant circuits to the appropriate service, and make the correct payments on a going-forward basis.

29.4 To the extent the independent auditor's report concludes that Level 3 failed to comply in all material respects with the service eligibility criteria, Level 3 shall reimburse BellSouth for the cost of the independent auditor. To the extent the independent auditor's report concludes that Level 3 did comply in all material respects with the service eligibility criteria, BellSouth will reimburse Level 3 for its reasonable and demonstrable costs associated with the audit. Level 3 will maintain appropriate documentation to support its certifications. The Parties shall provide such reimbursement within thirty (30) calendar days of receipt of a statement of such costs.

30. Level 3 shall not obtain a Network Element for the exclusive provision of mobile wireless services or interexchange services.

31. Facilities that do not terminate at a demarcation point at an End User premises, including, by way of example, but not limited to, facilities that terminate to another carrier's switch or premises, a cell site, Mobile Switching Center or base station, do not constitute local Loops under Section 251, except to the extent that Level 3 may require Loops to such locations for the purpose of providing telecommunications services to its personnel at those locations.

32. Subloop Elements.

32.1 Where facilities permit, BellSouth shall offer access to its Unbundled Subloop (USL) elements as specified herein.

32.2 Unbundled Subloop Distribution (USLD)

32.2.1 The USLD facility is a dedicated transmission facility that BellSouth provides from an End User's point of demarcation to a BellSouth cross-connect device. The BellSouth cross-connect device may be located within a remote terminal (RT) or a stand-alone cross-box in the field or in the equipment room of a building. The USLD media is a copper twisted pair that can be provisioned as a 2-wire or 4-wire facility. BellSouth will make available the following subloop distribution offerings where facilities exist:

USLD – Voice Grade (USLD-VG)
Unbundled Copper Subloop (UCSL)
USLD – Intrabuilding Network Cable (USLD-INC (aka riser cable))

32.2.2 USLD-VG is a copper subloop facility from the cross-box in the field up to and including the point of demarcation at the End User's premises and may have load coils.

32.2.3 UCSL is a copper facility eighteen thousand (18,000) feet or less in length provided from the cross-box in the field up to and including the End User's point of demarcation. If available, this facility will not have any intervening equipment such as load coils between the End User and the cross-box.

32.2.4 If Level 3 requests a UCSL and it is not available, Level 3 may request the copper Subloop facility be modified pursuant to the ULM process to remove load coils and/or excessive bridged taps. If load coils and/or

excessive bridged taps are removed, the facility will be classified as a UCSL.

32.2.5 USLD-INC is the distribution facility owned or controlled by BellSouth inside a building or between buildings on the same property that is not separated by a public street or road. USLD-INC includes the facility from the cross-connect device in the building equipment room up to and including the point of demarcation at the End User's premises.

32.2.6 Upon request for USLD-INC from Level 3, BellSouth will install a cross-connect panel in the building equipment room for the purpose of accessing USLD-INC pairs from a building equipment room. The cross-connect panel will function as a single point of interconnection (SPOI) for USLD-INC and will be accessible by multiple carriers as space permits. BellSouth will place cross-connect blocks in twenty five (25) pair increments for Level 3's use on this cross-connect panel. Level 3 will be responsible for connecting its facilities to the twenty five (25) pair cross-connect block(s).

32.2.7 For access to Voice Grade USLD and UCSL, Level 3 shall install a cable to the BellSouth cross-box pursuant to the terms and conditions for physical collocation for remote sites set forth in Attachment 4. This cable would be connected by a BellSouth technician within the BellSouth cross-box during the set-up process. Level 3's cable pairs can then be connected to BellSouth's USL within the BellSouth cross-box by the BellSouth technician.

32.2.8 Through the SI process, BellSouth will determine whether access to USLs at the location requested by Level 3 is technically feasible and whether sufficient capacity exists in the cross-box. If existing capacity is sufficient to meet Level 3's request, then BellSouth will perform the site set-up as described in the CLEC Information Package, located at BellSouth's Interconnection Web site: www.interconnection.bellsouth.com/products/html/unes.html.

32.2.9 The site set-up must be completed before Level 3 can order Subloop pairs. For the site set-up in a BellSouth cross-connect box in the field, BellSouth will perform the necessary work to splice Level 3's cable into the cross-connect box. For the site set-up inside a building equipment room, BellSouth will perform the necessary work to install the cross-connect panel and the connecting block(s) that will be used to provide access to the requested USLs.

32.2.10 Once the site set-up is complete, Level 3 will request Subloop pairs through submission of a LSR form to the LCSC. OC is required with USL pair provisioning when Level 3 requests reuse of an existing facility, and the OC charge shall be billed in addition to the USL pair rate. For expedite requests by Level 3 for Subloop pairs, expedite charges will apply for intervals less than five (5) days.

32.2.11 USLs will be provided in accordance with BellSouth's TR73600 Unbundled Local Loop Technical Specifications.

32.3 Unbundled Network Terminating Wire (UNTW)

32.3.1 UNTW is unshielded twisted copper wiring that is used to extend circuits from an intra-building network cable terminal or from a building entrance terminal to an individual End User's point of demarcation. It is the final portion of the Loop that in multi-subscriber configurations represents the point at which the network branches out to serve individual subscribers.

32.3.1.1 This element will be provided in MDUs and/or Multi-Tenants Units (MTUs) where either Party owns wiring all the way to the End User's premises. Neither Party will provide this element in locations where the property owner provides its own wiring to the End User's premises, where a third party owns the wiring to the End User's premises.

32.3.2 Requirements

32.3.2.1 On a multi-unit premises, upon request of the other Party (Requesting Party), the Party owning the network terminating wire (Provisioning Party) will provide access to UNTW pairs on an Access Terminal that is suitable for use by multiple carriers at each Garden Terminal or Wiring Closet.

32.3.2.2 The Provisioning Party shall not be required to install new or additional NTW beyond existing NTW to provision the services of the Requesting Party.

32.3.2.3 In existing MDUs and/or MTUs in which BellSouth does not own or control wiring (INC/NTW) to the End Users premises, and Level 3 does own or control such wiring, Level 3 will install UNTW Access Terminals for BellSouth under the same terms and conditions as BellSouth provides UNTW Access Terminals to Level 3.

32.3.2.4 In situations in which BellSouth activates a UNTW pair, BellSouth will compensate Level 3 for each pair activated commensurate to the price specified in Level 3's Agreement.

32.3.2.5 Upon receipt of the UNTW SI requesting access to the Provisioning Party's UNTW pairs at a multi-unit premises, representatives of both Parties will participate in a meeting at the site of the requested access. The purpose of the site visit will include discussion of the procedures for installation and location of the Access Terminals. By request of the Requesting Party, an Access Terminal will be installed either adjacent to each of the Provisioning Party's Garden Terminal or inside each Wiring Closet. The Requesting Party will deliver and connect its central office facilities to the UNTW pairs within the Access Terminal. The Requesting Party may access any available pair on an Access Terminal. A pair is available when a pair is not being utilized to provide service or where the End User has requested a change in its local service provider to the Requesting Party. Prior to connecting the Requesting Party's service on a

pair previously used by the Provisioning Party, the Requesting Party is responsible for ensuring the End User is no longer using the Provisioning Party's service or another CLEC's service before accessing UNTW pairs.

32.3.2.6 Access Terminal installation intervals will be established on an individual case basis.

32.3.2.7 The Requesting Party is responsible for obtaining the property owner's permission for the Provisioning Party to install an Access Terminal(s) on behalf of the Requesting Party. The submission of the SI by the Requesting Party will serve as certification by the Requesting Party that such permission has been obtained. If the property owner objects to Access Terminal installations that are in progress or within thirty (30) days after completion and demands removal of Access Terminals, the Requesting Party will be responsible for costs associated with removing Access Terminals and restoring the property to its original state prior to Access Terminals being installed.

32.3.2.8 The Requesting Party shall indemnify and hold harmless the Provisioning Party against any claims of any kind that may arise out of the Requesting Party's failure to obtain the property owner's permission. The Requesting Party will be billed for nonrecurring and recurring charges for accessing UNTW pairs at the time the Requesting Party activates the pair(s). The Requesting Party will notify the Provisioning Party within five (5) business days of activating UNTW pairs using the LSR form.

32.3.2.9 If a trouble exists on a UNTW pair, the Requesting Party may use an alternate spare pair that serves that End User if a spare pair is available. In such cases, the Requesting Party will re-terminate its existing jumper from the defective pair to the spare pair. Alternatively, the Requesting Party will isolate and report troubles in the manner specified by the Provisioning Party. The Requesting Party must tag the UNTW pair that requires repair. If the Provisioning Party dispatches a technician on a reported trouble call and no UNTW trouble is found, the Provisioning Party will charge Requesting Party for time spent on the dispatch and testing the UNTW pair(s).

32.3.2.10 If the Requesting Party initiates the Access Terminal installation and the Requesting Party has not activated at least ten percent (10%) of the capacity of the Access Terminal installed pursuant to the Requesting Party's request for an Access Terminal within six (6) months of installation of the Access Terminal, the Provisioning Party will bill the Requesting Party a nonrecurring charge equal to the actual cost of provisioning the Access Terminal.

32.3.3.11 If the Provisioning Party determines that the Requesting Party is using the UNTW pairs without reporting the activation of the pairs, the Requesting Party will be billed for the use of that pair back to the date the End User began receiving service from the Requesting Party at that location. Upon request, the Requesting Party will provide copies of its billing record to substantiate

such date. If the Requesting Party fails to provide such records, then the Provisioning Party will bill the Requesting Party back to the date of the Access Terminal installation.

| UNBUNDLED NETWORK ELEMENTS - North Carolina | | | | | | | | | | | | | | Attachment: 2 Exh A | | | |
|---|---|---|---|---|---|---|---|---|---|---|---|---|---|---|---|---|---|
| CATEGORY | | RATE ELEMENTS | Interim | Zone | BCS | USOC | RATES($) | | | | | Svc Order Submitted Elec per LSR | Svc Order Submitted Manually per LSR | Incremental Charge - Manual Svc Order vs. Electronic-1st | Incremental Charge - Manual Svc Order vs. Electronic-Add'l | Incremental Charge - Manual Svc Order vs. Electronic-Disc 1st | Incremental Charge - Manual Svc Order vs. Electronic-Disc Add'l |
| | | | | | | | | Nonrecurring | | Nonrecurring Disconnect | | OSS Rates($) | | | | | |
| | | | | | | | Rec | First | Add'l | First | Add'l | SOMEC | SOMAN | SOMAN | SOMAN | SOMAN | SOMAN |
| **UNBUNDLED EXCHANGE ACCESS LOOP** | | | | | | | | | | | | | | | | | |
| | **2-WIRE ANALOG VOICE GRADE LOOP** | | | | | | | | | | | | | | | | |
| | | Switch-As-Is Conversion rate per UNE Loop, Single LSR, (per DS0) | | | UEA | URESL | | 25.03 | 3.53 | | | | | | | | |
| | | Switch-As-Is Conversion rate per UNE Loop, Spreadsheet, (per DS0) | | | UEA | URESP | | 26.52 | 5.02 | | | | | | | | |
| | **4-WIRE ANALOG VOICE GRADE LOOP** | | | | | | | | | | | | | | | | |
| | | Switch-As-Is Conversion rate per UNE Loop, Single LSR, (per DS0) | | | UEA | URESL | | 25.03 | 3.53 | | | | | | | | |
| | | Switch-As-Is Conversion rate per UNE Loop, Spreadsheet, (per DS0) | | | UEA | URESP | | 26.52 | 5.02 | | | | | | | | |
| | **4-WIRE DS1 DIGITAL LOOP** | | | | | | | | | | | | | | | | |
| | | Switch-As-Is Conversion rate per UNE Loop, Single LSR, (per DS1) | | | USL | URESL | | 25.03 | 3.53 | | | | | | | | |
| | | Switch-As-Is Conversion rate per UNE Loop, Spreadsheet, (per DS1) | | | USL | URESP | | 26.52 | 5.02 | | | | | | | | |
| | **4-WIRE 19.2, 56 OR 64 KBPS DIGITAL GRADE LOOP** | | | | | | | | | | | | | | | | |
| | | Switch-As-Is Conversion rate per UNE Loop, Single LSR, (per DS0) | | | UDL | URESL | | 25.03 | 3.53 | | | | | | | | |
| | | Switch-As-Is Conversion rate per UNE Loop, Spreadsheet, (per DS0) | | | UDL | URESP | | 26.52 | 5.02 | | | | | | | | |
| **ADDITIONAL NETWORK ELEMENTS** | | | | | | | | | | | | | | | | | |
| | | Wholesale to UNE, Switch-As-Is Conversion Charge | | | UNCVX, U1TVX, UNCDX, U1TDX, UNC1X, U1TD1,UNC3X, U1TD3, UNCSX, U1TS1, UDF,UDFCX | UNCCC | | 38.39 | 17.64 | | | | | | | | |
| | | Unbundled Misc Rate Element, SNE SAI, Single Network Element - Switch As Is Non-recurring Charge, per circuit (LSR) | | | U1TVX, U1TDX, U1TD1, U1TD3, U1TS1, UDF, UE3 | URESL | | 36.90 | 16.15 | | | | | | | | |
| | | Unbundled Misc Rate Element, SNE SAI, Single Network Element - Switch As Is Non-recurring Charge, incremental charge per circuit on a spreadsheet | | | U1TVX, U1TDX, U1TD1, U1TD3, U1TS1, UDF, UE3 | URESP | | 1.49 | 1.49 | | | | | | | | |
| **UNE LOOP COMMINGLING** | | | | | | | | | | | | | | | | | |
| | **2-WIRE ANALOG VOICE GRADE LOOP - COMMINGLING** | | | | | | | | | | | | | | | | |
| | | 2-Wire Analog Voice Grade Loop - Service Level 2 w/Loop or Ground Start Signaling - Zone 1 | | 1 | NTCVG | UEAL2 | 11.96 | 102.10 | 65.72 | | | | | | | | |
| | | 2-Wire Analog Voice Grade Loop - Service Level 2 w/Loop or Ground Start Signaling - Zone 2 | | 2 | NTCVG | UEAL2 | 17.36 | 102.10 | 65.72 | | | | | | | | |
| | | 2-Wire Analog Voice Grade Loop - Service Level 2 w/Loop or Ground Start Signaling - Zone 3 | | 3 | NTCVG | UEAL2 | 25.23 | 102.10 | 65.72 | | | | | | | | |
| | | 2-Wire Analog Voice Grade Loop - Service Level 2 w/Reverse Battery Signaling - Zone 1 | | 1 | NTCVG | UEAR2 | 11.96 | 102.10 | 65.72 | | | | | | | | |
| | | 2-Wire Analog Voice Grade Loop - Service Level 2 w/Reverse Battery Signaling - Zone 2 | | 2 | NTCVG | UEAR2 | 17.36 | 102.10 | 65.72 | | | | | | | | |
| | | 2-Wire Analog Voice Grade Loop - Service Level 2 w/Reverse Battery Signaling - Zone 3 | | 3 | NTCVG | UEAR2 | 25.23 | 102.10 | 65.72 | | | | | | | | |
| | | Switch-As-Is Conversion rate per UNE Loop, Single LSR, (per DS0) | | | NTCVG | URESL | | 25.03 | 3.53 | | | | | | | | |
| | | Switch-As-Is Conversion rate per UNE Loop, Spreadsheet, (per DS0) | | | NTCVG | URESP | | 26.52 | 5.02 | | | | | | | | |
| | | CLEC to CLEC Conversion Charge without outside dispatch | | | NTCVG | UREWO | | 87.49 | 36.26 | | | | | | | | |
| | | Loop Tagging - Service Level 2 (SL2) | | | NTCVG | URETL | | 11.20 | 1.10 | | | | | | | | |
| | **4-WIRE ANALOG VOICE GRADE LOOP -COMMINGLING** | | | | | | | | | | | | | | | | |
| | | 4-Wire Analog Voice Grade Loop - Zone 1 | | 1 | NTCVG | UEAL4 | 19.52 | 127.40 | 91.02 | | | | | | | | |
| | | 4-Wire Analog Voice Grade Loop - Zone 2 | | 2 | NTCVG | UEAL4 | 24.74 | 127.40 | 91.02 | | | | | | | | |

| UNBUNDLED NETWORK ELEMENTS - North Carolina | | | | | | | | | | | | | | Attachment: 2 Exh A | | | |
|---|---|---|---|---|---|---|---|---|---|---|---|---|---|---|---|---|---|
| CATEGORY | RATE ELEMENTS | Interim | Zone | BCS | USOC | RATES($) | | | | | Svc Order Submitted Elec per LSR | Svc Order Submitted Manually per LSR | Incremental Charge - Manual Svc Order vs. Electronic-1st | Incremental Charge - Manual Svc Order vs. Electronic-Add'l | Incremental Charge - Manual Svc Order vs. Electronic-Disc 1st | Incremental Charge - Manual Svc Order vs. Electronic-Disc Add'l |
| | | | | | | | Nonrecurring | | Nonrecurring Disconnect | | OSS Rates($) | | | | | |
| | | | | | | Rec | First | Add'l | First | Add'l | SOMEC | SOMAN | SOMAN | SOMAN | SOMAN | SOMAN |
| | 4-Wire Analog Voice Grade Loop - Zone 3 | | 3 | NTCVG | UEAL4 | 46.11 | 127.40 | 91.02 | | | | | | | | |
| | Switch-As-Is Conversion rate per UNE Loop, Single LSR, (per DS0) | | | NTCVG | URESL | | 25.03 | 3.53 | | | | | | | | |
| | Switch-As-Is Conversion rate per UNE Loop, Spreadsheet, (per DS0) | | | NTCVG | URESP | | 26.52 | 5.02 | | | | | | | | |
| | CLEC to CLEC Conversion Charge without outside dispatch | | | NTCVG | UREWO | | 87.49 | 36.26 | | | | | | | | |
| | **4-WIRE DS1 DIGITAL LOOP - COMMINGLING** | | | | | | | | | | | | | | | |
| | 4-Wire DS1 Digital Loop - Zone 1 | | 1 | NTCD1 | USLXX | 63.62 | 245.16 | 152.98 | | | | | | | | |
| | 4-Wire DS1 Digital Loop - Zone 2 | | 2 | NTCD1 | USLXX | 104.40 | 245.16 | 152.98 | | | | | | | | |
| | 4-Wire DS1 Digital Loop - Zone 3 | | 3 | NTCD1 | USLXX | 210.22 | 245.16 | 152.98 | | | | | | | | |
| | Switch-As-Is Conversion rate per UNE Loop, Single LSR, (per DS1) | | | NTCD1 | URESL | | 25.03 | 3.53 | | | | | | | | |
| | Switch-As-Is Conversion rate per UNE Loop, Spreadsheet, (per DS1) | | | NTCD1 | URESP | | 26.52 | 5.02 | | | | | | | | |
| | CLEC to CLEC Conversion Charge without outside dispatch | | | NTCD1 | UREWO | | 100.82 | 42.93 | | | | | | | | |
| | **4-WIRE 19.2, 56 OR 64 KBPS DIGITAL GRADE LOOP - COMMINGLING** | | | | | | | | | | | | | | | |
| | 4 Wire Unbundled Digital Loop 2.4 Kbps - Zone 1 | | 1 | NTCUD | UDL2X | 21.98 | 121.86 | 85.48 | | | | | | | | |
| | 4 Wire Unbundled Digital Loop 2.4 Kbps - Zone 2 | | 2 | NTCUD | UDL2X | 27.58 | 121.86 | 85.48 | | | | | | | | |
| | 4 Wire Unbundled Digital Loop 2.4 Kbps - Zone3 | | 3 | NTCUD | UDL2X | 43.08 | 121.86 | 85.48 | | | | | | | | |
| | 4 Wire Unbundled Digital Loop 4.8 Kbps -Zone 1 | | 1 | NTCUD | UDL4X | 21.98 | 121.86 | 85.48 | | | | | | | | |
| | 4 Wire Unbundled Digital Loop 4.8 Kbps - Zone 2 | | 2 | NTCUD | UDL4X | 27.58 | 121.86 | 85.48 | | | | | | | | |
| | 4 Wire Unbundled Digital Loop 4.8 Kbps - Zone 3 | | 3 | NTCUD | UDL4X | 43.08 | 121.86 | 85.48 | | | | | | | | |
| | 4 Wire Unbundled Digital Loop 9.6 Kbps - Zone 1 | | 1 | NTCUD | UDL9X | 21.98 | 121.86 | 85.48 | | | | | | | | |
| | 5 Wire Unbundled Digital Loop 9.6 Kbps - Zone 2 | | 2 | NTCUD | UDL9X | 27.58 | 121.86 | 85.48 | | | | | | | | |
| | 6 Wire Unbundled Digital Loop 9.6 Kbps - Zone 3 | | 3 | NTCUD | UDL9X | 43.08 | 121.86 | 85.48 | | | | | | | | |
| | 4 Wire Unbundled Digital 19.2 Kbps - Zone 1 | | 1 | NTCUD | UDL19 | 21.98 | 121.86 | 85.48 | | | | | | | | |
| | 4 Wire Unbundled Digital 19.2 Kbps - Zone 2 | | 2 | NTCUD | UDL19 | 27.58 | 121.86 | 85.48 | | | | | | | | |
| | 4 Wire Unbundled Digital 19.2 Kbps - Zone 3 | | 3 | NTCUD | UDL19 | 43.08 | 121.86 | 85.48 | | | | | | | | |
| | 4 Wire Unbundled Digital Loop 56 Kbps - Zone 1 | | 1 | NTCUD | UDL56 | 21.98 | 121.86 | 85.48 | | | | | | | | |
| | 4 Wire Unbundled Digital Loop 56 Kbps - Zone 2 | | 2 | NTCUD | UDL56 | 27.58 | 121.86 | 85.48 | | | | | | | | |
| | 4 Wire Unbundled Digital Loop 56 Kbps - Zone 3 | | 3 | NTCUD | UDL56 | 43.08 | 121.86 | 85.48 | | | | | | | | |
| | 4 Wire Unbundled Digital Loop 64 Kbps - Zone 1 | | 1 | NTCUD | UDL64 | 21.98 | 121.86 | 85.48 | | | | | | | | |
| | 4 Wire Unbundled Digital Loop 64 Kbps - Zone 2 | | 2 | NTCUD | UDL64 | 27.58 | 121.86 | 85.48 | | | | | | | | |
| | 4 Wire Unbundled Digital Loop 64 Kbps - Zone 3 | | 3 | NTCUD | UDL64 | 43.08 | 121.86 | 85.48 | | | | | | | | |
| | Switch-As-Is Conversion rate per UNE Loop, Single LSR, (per DS0) | | | NTCUD | URESL | | 25.03 | 3.53 | | | | | | | | |
| | Switch-As-Is Conversion rate per UNE Loop, Spreadsheet, (per DS0) | | | NTCUD | URESP | | 26.52 | 5.02 | | | | | | | | |
| | CLEC to CLEC Conversion Charge without outside dispatch | | | NTCUD | UREWO | | 101.86 | 49.62 | | | | | | | | |
| | Order Coordination for Specified Conversion Time (per LSR) | | | NTCVG, NTCUD, NTCD1 | OCOSL | | 17.56 | | | | | | | | | |
| **LINE SPLITTING** | | | | | | | | | | | | | | | | |
| | **END USER ORDERING-CENTRAL OFFICE BASED** | | | | | | | | | | | | | | | |
| | Line Splitting - per line activation DLEC owned splitter | | | UEPSR UEPSB | UREOS | 0.61 | 15.53 | 7.79 | | | | | | | | |
| | **UNBUNDLED EXCHANGE ACCESS LOOP** | | | | | | | | | | | | | | | |
| | **2-WIRE ANALOG VOICE GRADE LOOP** | | | | | | | | | | | | | | | |
| | 2 Wire Analog Voice Grade Loop-Service Level 1-Line Splitting-Zone 1 | | 1 | UEPSR UEPSB | UEALS | 10.82 | 36.54 | 16.87 | 0.00 | 0.00 | | | | | | |
| | 2 Wire Analog Voice Grade Loop-Service Level 1-Line Splitting-Zone 1 | | 1 | UEPSR UEPSB | UEABS | 10.82 | 36.54 | 16.87 | 0.00 | 0.00 | | | | | | |
| | 2 Wire Analog Voice Grade Loop- Service Level 1-Line Splitting-Zone 2 | | 2 | UEPSR UEPSB | UEALS | 16.21 | 36.54 | 16.87 | 0.00 | 0.00 | | | | | | |
| | 2 Wire Analog Voice Grade Loop- Service Level 1-Line Splitting-Zone 2 | | 2 | UEPSR UEPSB | UEABS | 16.21 | 36.54 | 16.87 | 0.00 | 0.00 | | | | | | |
| | 2 Wire Analog Voice Grade Loop-Service Level 1-Line Splitting-Zone 3 | | 3 | UEPSR UEPSB | UEALS | 24.08 | 36.54 | 16.87 | 0.00 | 0.00 | | | | | | |
| | 2 Wire Analog Voice Grade Loop-Service Level 1-Line Splitting-Zone 3 | | 3 | UEPSR UEPSB | UEABS | 24.08 | 36.54 | 16.87 | 0.00 | 0.00 | | | | | | |
| **COMMINGLING** | | | | | | | | | | | | | | | | |

| UNBUNDLED NETWORK ELEMENTS - North Carolina | | | | | | | | | | | | | | Attachment: 2 Exh A | | | |
|---|---|---|---|---|---|---|---|---|---|---|---|---|---|---|---|---|---|
| CATEGORY | | RATE ELEMENTS | Interim | Zone | BCS | USOC | RATES($) | | | | | Svc Order Submitted Elec per LSR | Svc Order Submitted Manually per LSR | Incremental Charge - Manual Svc Order vs. Electronic-1st | Incremental Charge - Manual Svc Order vs. Electronic-Add'l | Incremental Charge - Manual Svc Order vs. Electronic-Disc 1st | Incremental Charge - Manual Svc Order vs. Electronic-Disc Add'l |
| | | | | | | | | Nonrecurring | | Nonrecurring Disconnect | | OSS Rates($) | | | | | |
| | | | | | | | Rec | First | Add'l | First | Add'l | SOMEC | SOMAN | SOMAN | SOMAN | SOMAN | SOMAN |
| | | Commingling Authorization | | | UNCVX, UNCDX, UNC1X, UNC3X, UNCSX, U1TD1, U1TD3, U1TS1, UE3, UDLSX, U1TVX, U1TDX, U1TUB, ULDVX, ULDD1, ULDD3, ULDS1 | CMGAU | 0.00 | 0.00 | 0.00 | | | | | | | | |
| | **Commingled (UNE part of single bandwidth circuit)** | | | | | | | | | | | | | | | | |
| | | Commingled VG COCI | | | XDV2X, NTCVG | 1D1VG | 0.4329 | 54.14 | 17.51 | | | | | | | | |
| | | Commingled Digital COCI | | | XDV6X, NTCUD | 1D1DD | 0.9199 | 54.14 | 17.51 | | | | | | | | |
| | | Commingled ISDN COCI | | | XDD4X | UC1CA | 1.53 | 54.14 | 17.51 | | | | | | | | |
| | | Commingled 2-wire VG Interoffice Channel Facility Termination | | | XDV2X | U1TV2 | 12.12 | 131.81 | 78.34 | | | | | | | | |
| | | Commingled 4-wire VG Interoffice Channel Facility Termination | | | XDV6X | U1TV4 | 10.19 | 131.81 | 78.34 | | | | | | | | |
| | | Commingled 56kbps Interoffice Channel Facility Termination | | | XDD4X | U1TD5 | 7.47 | 131.81 | 78.34 | | | | | | | | |
| | | Commingled 64kbps Interoffice Channel Facility Termination | | | XDD4X | U1TD6 | 7.47 | 131.81 | 78.34 | | | | | | | | |
| | | Commingled VG/DS0 Interoffice Channel per mile | | | XDV2X, XDV6X, XDD4X | 1L5XX | 0.0095 | | | | | | | | | | |
| | | Commingled 2-wire Local Loop Zone 1 | | 1 | XDV2X | UEAL2 | 11.96 | 385.26 | 72.08 | | | | | | | | |
| | | Commingled 2-wire Local Loop Zone 2 | | 2 | XDV2X | UEAL2 | 17.36 | 385.26 | 72.08 | | | | | | | | |
| | | Commingled 2-wire Local Loop Zone 3 | | 3 | XDV2X | UEAL2 | 25.23 | 385.26 | 72.08 | | | | | | | | |
| | | Commingled 4-wire Local Loop Zone 1 | | 1 | XDV6X | UEAL4 | 19.52 | 385.26 | 72.08 | | | | | | | | |
| | | Commingled 4-wire Local Loop Zone 2 | | 2 | XDV6X | UEAL4 | 24.74 | 385.26 | 72.08 | | | | | | | | |
| | | Commingled 4-wire Local Loop Zone 3 | | 3 | XDV6X | UEAL4 | 46.11 | 385.26 | 72.08 | | | | | | | | |
| | | Commingled 56kbps Local Loop Zone 1 | | 1 | XDD4X | UDL56 | 21.98 | 385.26 | 72.08 | | | | | | | | |
| | | Commingled 56kbps Local Loop Zone 2 | | 2 | XDD4X | UDL56 | 27.58 | 385.26 | 72.08 | | | | | | | | |
| | | Commingled 56kbps Local Loop Zone 3 | | 3 | XDD4X | UDL56 | 43.08 | 385.26 | 72.08 | | | | | | | | |
| | | Commingled 64kbps Local Loop Zone 1 | | 1 | XDD4X | UDL64 | 21.98 | 385.26 | 72.08 | | | | | | | | |
| | | Commingled 64kbps Local Loop Zone 2 | | 2 | XDD4X | UDL64 | 27.58 | 385.26 | 72.08 | | | | | | | | |
| | | Commingled 64kbps Local Loop Zone 3 | | 3 | XDD4X | UDL64 | 43.08 | 385.26 | 72.08 | | | | | | | | |
| | | Commingled ISDN Local Loop Zone 1 | | 1 | XDD4X | U1L2X | 19.78 | 385.26 | 72.08 | | | | | | | | |
| | | Commingled ISDN Local Loop Zone 2 | | 2 | XDD4X | U1L2X | 26.16 | 385.26 | 72.08 | | | | | | | | |
| | | Commingled ISDN Local Loop Zone 3 | | 3 | XDD4X | U1L2X | 35.37 | 385.26 | 72.08 | | | | | | | | |
| | | Commingled DS1 COCI | | | XDH1X, NTCD1 | UC1D1 | 8.43 | 54.14 | 17.51 | | | | | | | | |
| | | Commingled DS1 Interoffice Channel Facility Termination | | | XDH1X | U1TF1 | 31.06 | 234.02 | 162.52 | | | | | | | | |
| | | Commingled DS1 Interoffice Channel per mile | | | XDH1X | 1L5XX | 0.1938 | | | | | | | | | | |
| | | Commingled DS1/DS0 Channel System | | | XDH1X | MQ1 | 70.84 | 170.57 | | | | | | | | | |
| | | Commingled DS1 Local Loop Zone 1 | | 1 | XDH1X | USLXX | 63.62 | 412.03 | 139.55 | | | | | | | | |
| | | Commingled DS1 Local Loop Zone 2 | | 2 | XDH1X | USLXX | 104.40 | 412.03 | 139.55 | | | | | | | | |
| | | Commingled DS1 Local Loop Zone 3 | | 3 | XDH1X | USLXX | 210.22 | 412.03 | 139.55 | | | | | | | | |
| | | Commingled DS3 Local Loop Facility Termination | | | HFQC6 | UE3PX | 229.90 | 3,073.55 | 1,245.84 | | | | | | | | |
| | | Commingled DS3/STS-1 Local Loop per mile | | | HFQC6, HFRST | 1L5ND | 12.95 | | | | | | | | | | |
| | | Commingled STS-1 Local Loop Facility Termination | | | HFRST | UDLS1 | 257.82 | 3,073.55 | 1,245.84 | | | | | | | | |
| | | Commingled DS3/DS1 Channel System | | | HFQC6 | MQ3 | 84.32 | | | | | | | | | | |
| | | Commingled DS3 Interoffice Channel Facility Termination | | | HFQC6 | U1TF3 | 329.91 | 802.81 | 146.02 | | | | | | | | |
| | | Commingled DS3 Interoffice Channel per mile | | | HFQC6 | 1L5XX | 4.44 | | | | | | | | | | |
| | | Commingled STS-1Interoffice Channel Facility Termination | | | HFRST | U1TFS | 339.20 | 802.81 | 146.02 | | | | | | | | |
| | | Commingled STS-1Interoffice Channel per mile | | | HFRST | 1L5XX | 4.44 | | | | | | | | | | |
| | | Commingled Dark Fiber - Interoffice Transport, Per Four Fiber Strands, Per Route Mile Or Fraction Thereof | | | HEQDL | 1L5DF | 24.77 | | | | | | | | | | |
| | | Commingled Dark Fiber - Interoffice Transport, Per Four Fiber Strands, Per Route Mile Or Fraction Thereof | | | HEQDL | UDF14 | | 620.60 | 133.88 | | | | | | | | |
| **LINE SHARING** | | | | | | | | | | | | | | | | | |
| | **NOTE 1: The Line Sharing monthly recurring rates for all installations completed on or after October 02, 2003 shall be billed as follows:** | | | | | | | | | | | | | | | | |
| | **NOTE 1: 10/02/2003 – 10/01/2004: 25% of the rate for an unbundled copper loop non-designed ("UCLND")** | | | | | | | | | | | | | | | | |
| | **NOTE 1: 10/02/2004 – 10/01/2005: 50% of the rate for UCLND** | | | | | | | | | | | | | | | | |
| | **NOTE 1: 10/02/2005 – 10/01/2006: 75% of the rate for UCLND** | | | | | | | | | | | | | | | | |
| | **NOTE 1: Above will apply to USOCS: ULSDT and ULSCT** | | | | | | | | | | | | | | | | |

| UNBUNDLED NETWORK ELEMENTS - North Carolina | | | | | | | | | | | | | | Attachment: 2 Exh A | | | |
|---|---|---|---|---|---|---|---|---|---|---|---|---|---|---|---|---|---|
| CATEGORY | | RATE ELEMENTS | Interim | Zone | BCS | USOC | RATES($) | | | | | Svc Order Submitted Elec per LSR | Svc Order Submitted Manually per LSR | Incremental Charge - Manual Svc Order vs. Electronic-1st | Incremental Charge - Manual Svc Order vs. Electronic-Add'l | Incremental Charge - Manual Svc Order vs. Electronic-Disc 1st | Incremental Charge - Manual Svc Order vs. Electronic-Disc Add'l |
| | | | | | | | | Nonrecurring | | Nonrecurring Disconnect | | OSS Rates($) | | | | | |
| | | | | | | | Rec | First | Add'l | First | Add'l | SOMEC | SOMAN | SOMAN | SOMAN | SOMAN | SOMAN |
| | **NOTE 2: The Line Sharing monthly recurring rates with USOCs ULSDC and ULSCC applies only to circuits installed and inservice on or before October 1, 2003 | | | | | | | | | | | | | | | | |
| | LINE SHARING | | | | | | | | | | | | | | | | |
| | SPLITTERS-CENTRAL OFFICE BASED | | | | | | | | | | | | | | | | |
| | | Line Sharing Splitter, per System 96 Line Capacity | | | ULS | ULSDA | 181.18 | 631.54 | 0.00 | | | | | | | | |
| | | Line Sharing Splitter, per System 24 Line Capacity | | | ULS | ULSDB | 38.99 | 631.54 | 0.00 | | | | | | | | |
| | | Line Sharing Splitter, Per System, 8 Line Capacity | | | ULS | ULSD8 | 12.73 | 424.61 | 0.00 | | | | | | | | |
| | | Line Sharing-DLEC Owned Splitter in CO-CFA activaton-deactivation (per LSOD) | | | ULS | ULSDG | | 146.32 | 31.27 | | | | | | | | |
| | END USER ORDERING-CENTRAL OFFICE BASED LINE SHARING | | | | | | | | | | | | | | | | |
| | | Line Sharing - per Line Activation (BST Owned splitter) - OBSOLETE see **NOTE 2 | | | ULS | ULSDC | 0.61 | 54.71 | 28.77 | | | | | | | | |
| | | Line Share Service, TRO per line activation, BST owned splitter - Central Office Located (75% of UCLND) - please see NOTE 1 (E:10/2/2005) | | | ULS | ULSDT | 10.48 | 54.71 | 28.77 | | | | | | | | |
| | | Line Sharing - per Subsequent Activity per Line Rearrangement(BST Owned Splitter | | | ULS | ULSDS | | 35.42 | 16.57 | | | | | | | | |
| | | Line Sharing - per Subsequent Activity per Line Rearrangement(DLEC Owned Splitter | | | ULS | ULSCS | | 35.14 | 16.29 | | | | | | | | |
| | | Line Sharing - per Line Activation (DLEC owned Splitter) - OBSOLETE see **NOTE 2 | | | ULS | ULSCC | 0.61 | 47.44 | 19.31 | | | | | | | | |
| | | Line Share Service, TRO per line activation, CLEC owned splitter - Central Office Located (75% of UCLND) - please see NOTE 1 (E:10/2/2005) | | | ULS | ULSCT | 10.48 | 47.44 | 19.31 | | | | | | | | |
| | | MAINTENANCE | | | | | | | | | | | | | | | |
| | | No Trouble Found - per 1/2 hour increments - Basic | | | | | | 80.00 | 55.00 | | | | | | | | |
| | | No Trouble Found - per 1/2 hour increments - Overtime | | | | | | 120.00 | 82.50 | | | | | | | | |
| | | No Trouble Found - per 1/2 hour increments - Premium | | | | | | 160.00 | 110.00 | | | | | | | | |

| UNBUNDLED NETWORK ELEMENTS - North Carolina | | | | | | | | | | | | | | Attachment: 2 Exh A | | | |
|---|---|---|---|---|---|---|---|---|---|---|---|---|---|---|---|---|---|
| CATEGORY | | RATE ELEMENTS | Interim | Zone | BCS | USOC | RATES($) | | | | | Svc Order Submitted Elec per LSR | Svc Order Submitted Manually per LSR | Incremental Charge - Manual Svc Order vs. Electronic- 1st | Incremental Charge - Manual Svc Order vs. Electronic- Add'l | Incremental Charge - Manual Svc Order vs. Electronic- Disc 1st | Incremental Charge - Manual Svc Order vs. Electronic- Disc Add'l |
| | | | | | | | | Nonrecurring | | Nonrecurring Disconnect | | OSS Rates($) | | | | | |
| | | | | | | | Rec | First | Add'l | First | Add'l | SOMEC | SOMAN | SOMAN | SOMAN | SOMAN | SOMAN |
| 911 PBX LOCATE | | | | | | | | | | | | | | | | | |
| | 911 PBX LOCATE DATABASE CAPABILITY | | | | | | | | | | | | | | | | |
| | | Service Establishment per CLEC per End User Account | | | 9PBDC | 9PBEU | | 1,823.00 | | | | | | | | | |
| | | Changes to TN Range or Customer Profile | | | 9PBDC | 9PBTN | | 182.45 | | | | | | | | | |
| | | Per Telephone Number (Monthly) | | | 9PBDC | 9PBMM | 0.07 | | | | | | | | | | |
| | | Change Company (Service Provider) ID | | | 9PBDC | 9PBPC | | 535.57 | | | | | | | | | |
| | | PBX Locate Service Support per CLEC (Monthlt) | | | 9PBDC | 9PBMR | 165.63 | | | | | | | | | | |
| | | Service Order Charge | | | 9PBDC | 9PBSC | | 15.20 | | | | | | | | | |
| | 911 PBX LOCATE TRANSPORT COMPONENT | | | | | | | | | | | | | | | | |
| | See Att 3 | | | | | | | | | | | | | | | | |

**Amendment to the Agreement**
**Between**
**Level 3 Communications, L.L.C.**
**and**
**BellSouth Telecommunications, Inc.**
**Dated June 23, 2004**

Pursuant to this Amendment, (the "Amendment"), Level 3 Communications, L.L.C. (Level 3), and BellSouth Telecommunications, Inc. (BellSouth), hereinafter referred to collectively as the "Parties", hereby agree to amend that certain Interconnection Agreement between the Parties dated June 23, 2004 (Agreement).

WHEREAS, on February 21, 2006, the Georgia Public Service Commission (Commission) issued a Letter Order in Docket No. 14361-U (Letter Order) establishing new UNE rates (New UNE Rates) to replace the rates previously ordered by the Commission on June 24, 2003 and September 22, 2003 in the first phase of Docket No. 14361-U (Old UNE Rates); and

WHEREAS, the Letter Order states that BellSouth is entitled to recover the difference between the Old UNE Rates and the New UNE Rates for the period of time that BellSouth charged Level 3 the Old UNE Rates unless the Agreement indicates that the Parties intended otherwise; and

WHEREAS, the Parties are obligated to amend the Agreement to replace the Old UNE Rates in the Agreement with the New UNE Rates established by the Commission in its Letter Order; and

WHEREAS, the Parties enter into this Amendment without prejudice to any position they may take, or have taken, with respect to similar future agreements between the Parties, and

NOW, THEREFORE, in consideration of the mutual provisions contained herein and other good and valuable consideration, the receipt and sufficiency of which are hereby acknowledged, the Parties hereby covenant and agree as follows:

1. The Parties hereby agree to incorporate into the Agreement the New UNE Rates set forth in Exhibit 1 to Attachment 1, Exhibit 2 to Attachment 2, Exhibit 3 to Attachment 3, and Exhibit 4 to Attachment 4, all as attached hereto and incorporated herein by this reference, and such rates shall apply to services provided in the State of Georgia only.

2. To the extent that the New UNE Rates set forth in Exhibit 1 to Attachment 1, Exhibit 2 to Attachment 2, and Exhibit 4 to Attachment 4, all attached hereto, conflict with any other rates in the Agreement, the rates in these attached Exhibits shall prevail for the State of Georgia.

3. Exhibit A to Attachment 3 of the Agreement shall be deleted in its entirety, and Exhibit 3 to Attachment 3 as attached hereto shall be substituted in lieu thereof.

4. For purposes of amending the Agreement to incorporate the New UNE Rates on a going-forward basis, this Amendment shall be deemed effective on March 31, 2006 (Amendment Effective Date). The Parties agree to true up the difference between the New UNE Rates and the Old UNE Rates retroactively to June 23,

2004. Notwithstanding the foregoing, Level 3's agreement to true up the difference between the New UNE Rates and the Old UNE Rates retroactively to June 23, 2004, in no way constitutes an admission or acknowledgment that retroactive true-up of rates is or is not required by the terms of the Agreement or otherwise, and Level 3hereby reserves all rights to argue any position in that regard in the future.

5. All of the other provisions of the Agreement shall remain in full force and effect.

6. Either or both of the Parties is authorized to submit this Amendment to the State of Georgia PSC for approval subject to Section 252(e) of the Federal Telecommunications Act of 1996.

IN WITNESS WHEREOF, the Parties have executed this Amendment the day and year written below.

**BellSouth Telecommunications, Inc.**

By: _____

Name: Kristen E. Shore

Title: Director

Date: 1/11/07

**Level 3 Communications, L.L.C.**

By: _____

Name: Andrea L. Gavalus

Title: Vice President

Date: 1/10/07

| RESALE DISCOUNTS & RATES - Georgia | | | | | | | | | | | | | Attachment: 1 Exh: D | | | |
|---|---|---|---|---|---|---|---|---|---|---|---|---|---|---|---|---|
| CATEGORY | | RATE ELEMENTS | Interim | Zone | BCS | USOC | RATES($) | | | | | Svc Order Submitted Elec per LSR | Svc Order Submitted Manually per LSR | Incremental Charge - Manual Svc Order vs. Electronic- 1st | Incremental Charge - Manual Svc Order vs. Electronic- Add'l | Incremental Charge - Manual Svc Order vs. Electronic- Disc 1st | Incremental Charge - Manual Svc Order vs. Electronic- Disc Add'l |
| | | | | | | | | Nonrecurring | | Nonrecurring Disconnect | | OSS Rates($) | | | | | |
| | | | | | | | Rec | First | Add'l | First | Add'l | SOMEC | SOMAN | SOMAN | SOMAN | SOMAN | SOMAN |
| ODUF/EODUF SERVICES | | | | | | | | | | | | | | | | | |
| | OPTIONAL DAILY USAGE FILE (ODUF) | | | | | | | | | | | | | | | | |
| | | ODUF: Recording, per message | | | | | 0.000007 | | | | | | | | | | |
| | | ODUF: Message Processing, per message | | | | | 0.002165 | | | | | | | | | | |
| | | ODUF: Message Processing, per Magnetic Tape provisioned | | | | | 36.02 | | | | | | | | | | |
| | | ODUF: Data Transmission (CONNECT:DIRECT), per message | | | | | 0.00010888 | | | | | | | | | | |
| | ENHANCED OPTIONAL DAILY USAGE FILE (EODUF) | | | | | | | | | | | | | | | | |
| | | EODUF: Message Processing, per message | | | | | 0.229077 | | | | | | | | | | |

| UNBUNDLED NETWORK ELEMENTS - Georgia | | | | | | | | | | | | | | Attachement 2 Exh: A | | | |
|---|---|---|---|---|---|---|---|---|---|---|---|---|---|---|---|---|---|
| CATEGORY | RATE ELEMENTS | Interim | Zone | BCS | USOC | RATES($) | | | | | Svc Order Submitted Elec per LSR | Svc Order Submitted Manually per LSR | Incremental Charge - Manual Svc Order vs. Electronic-1st | Incremental Charge - Manual Svc Order vs. Electronic-Add'l | Incremental Charge - Manual Svc Order vs. Electronic-Disc 1st | Incremental Charge - Manual Svc Order vs. Electronic-Disc Add'l |
| | | | | | | | Nonrecurring | | Nonrecurring Disconnect | | OSS Rates($) | | | | | |
| | | | | | | Rec | First | Add'l | First | Add'l | SOMEC | SOMAN | SOMAN | SOMAN | SOMAN | SOMAN |
| | The "Zone" shown in the sections for stand-alone loops or loops as part of a combination refers to Geographically Deaveraged UNE Zones. To view Geographically Deaveraged UNE Zone Designations by Central Office, refer to internet Website: http://www.interconnection.bellsouth.com/become_a_clec/html/interconnection.htm | | | | | | | | | | | | | | | |
| OPERATIONS SUPPORT SYSTEMS (OSS) - "REGIONAL RATES" | | | | | | | | | | | | | | | | |
| | OSS - Manual Service Order Charge, Per Local Service Request (LSR) - UNE Only | | | | SOMAN | | 11.71 | 0.00 | 6.13 | 0.00 | | | | | | |
| UNBUNDLED EXCHANGE ACCESS LOOP | | | | | | | | | | | | | | | | |
| 2-WIRE ANALOG VOICE GRADE LOOP | | | | | | | | | | | | | | | | |
| | 2-Wire Analog Voice Grade Loop - Service Level 1- Zone 1 | | 1 | UEANL | UEAL2 | 12.08 | 39.98 | 9.98 | 5.61 | 1.72 | | | | | | |
| | 2-Wire Analog Voice Grade Loop - Service Level 1- Zone 2 | | 2 | UEANL | UEAL2 | 17.43 | 39.98 | 9.98 | 5.61 | 1.72 | | | | | | |
| | 2-Wire Analog Voice Grade Loop - Service Level 1- Zone 3 | | 3 | UEANL | UEAL2 | 35.09 | 39.98 | 9.98 | 5.61 | 1.72 | | | | | | |
| | 2-Wire Analog Voice Grade Loop - Service Level 1- Zone 1 | | 1 | UEANL | UEASL | 12.08 | 39.98 | 9.98 | 5.61 | 1.72 | | | | | | |
| | 2-Wire Analog Voice Grade Loop - Service Level 1- Zone 2 | | 2 | UEANL | UEASL | 17.43 | 39.98 | 9.98 | 5.61 | 1.72 | | | | | | |
| | 2-Wire Analog Voice Grade Loop - Service Level 1- Zone 3 | | 3 | UEANL | UEASL | 35.09 | 39.98 | 9.98 | 5.61 | 1.72 | | | | | | |
| | Manual Order Coordiantion for UVL-SL1s (per loop) | | | UEANL | UEAMC | | 18.90 | 18.90 | | | | | | | | |
| | Order Coordination for Specified Conversion Time for UVL-SL1 (per LSR) | | | UEANL | OCOSL | | 57.73 | | | | | | | | | |
| | Unbundled Non-Design Voice Loop, billing for BST providing make-up (Engineering Information - E.I.) | | | UEANL | UEANM | | 7.29 | 7.29 | | | | | | | | |
| 2-WIRE UNBUNDLED COPPER LOOP - NON-DESIGNED | | | | | | | | | | | | | | | | |
| | 2 Wire Unbundled Copper Loop Non-Designed- Zone 1 | | 1 | UEQ | UEQ2X | 11.02 | 44.69 | 22.40 | 0.00 | 0.00 | | | | | | |
| | 2 Wire Unbundled Copper Loop Non-Designed- Zone 2 | | 2 | UEQ | UEQ2X | 12.72 | 44.69 | 22.40 | 0.00 | 0.00 | | | | | | |
| | 2 Wire Unbundled Copper Loop Non-Designed-Zone 3 | | 3 | UEQ | UEQ2X | 20.22 | 44.69 | 22.40 | 0.00 | 0.00 | | | | | | |
| | Manual Order Coordination 2 Wire Unbundled Copper Loop - Non-Designed (per loop) | | | UEQ | USBMC | | 18.90 | 18.90 | | | | | | | | |
| | Unbundled Copper Loop - Non-Design, billing for BST providing make-up (Engineering Information - E.I.) | | | UEQ | UEQMU | | 7.29 | 7.29 | | | | | | | | |
| UNBUNDLED EXCHANGE ACCESS LOOP | | | | | | | | | | | | | | | | |
| 2-WIRE ANALOG VOICE GRADE LOOP | | | | | | | | | | | | | | | | |
| | 2-Wire Analog Voice Grade Loop - Service Level 2 w/Loop or Ground Start Signaling - Zone 1 | | 1 | UEA | UEAL2 | 13.32 | 79.78 | 24.62 | 18.90 | 7.86 | | | | | | |
| | 2-Wire Analog Voice Grade Loop - Service Level 2 w/Loop or Ground Start Signaling - Zone 2 | | 2 | UEA | UEAL2 | 18.66 | 79.78 | 24.62 | 18.90 | 7.86 | | | | | | |
| | 2-Wire Analog Voice Grade Loop - Service Level 2 w/Loop or Ground Start Signaling - Zone 3 | | 3 | UEA | UEAL2 | 36.33 | 79.78 | 24.62 | 18.90 | 7.86 | | | | | | |
| | 2-Wire Analog Voice Grade Loop - Service Level 2 w/Reverse Battery Signaling - Zone 1 | | 1 | UEA | UEAR2 | 13.32 | 79.78 | 24.62 | 18.90 | 7.86 | | | | | | |
| | 2-Wire Analog Voice Grade Loop - Service Level 2 w/Reverse Battery Signaling - Zone 2 | | 2 | UEA | UEAR2 | 18.66 | 79.78 | 24.62 | 18.90 | 7.86 | | | | | | |
| | 2-Wire Analog Voice Grade Loop - Service Level 2 w/Reverse Battery Signaling - Zone 3 | | 3 | UEA | UEAR2 | 36.33 | 79.78 | 24.62 | 18.90 | 7.86 | | | | | | |
| | Switch-as-is Conversion rate per UNE Loop, Single LSR (per DS0)* | | | UEA | URESL | | 5.69 | 5.69 | | | | | | | | |
| | Switch-as-is Conversion rate per UNE Loop, Spreadsheet (per DS0)* | | | UEA | URESP | | 5.69 | 5.69 | | | | | | | | |
| 4-WIRE ANALOG VOICE GRADE LOOP | | | | | | | | | | | | | | | | |
| | 4-Wire Analog Voice Grade Loop - Zone 1 | | 1 | UEA | UEAL4 | 21.04 | 92.92 | 28.14 | 19.50 | 8.12 | | | | | | |
| | 4-Wire Analog Voice Grade Loop - Zone 2 | | 2 | UEA | UEAL4 | 24.49 | 92.92 | 28.14 | 19.50 | 8.12 | | | | | | |
| | 4-Wire Analog Voice Grade Loop - Zone 3 | | 3 | UEA | UEAL4 | 33.40 | 92.92 | 28.14 | 19.50 | 8.12 | | | | | | |
| | Switch-as-is Conversion rate per UNE Loop, Single LSR (per DS0)* | | | UEA | URESL | | 5.69 | 5.69 | | | | | | | | |
| | Switch-as-is Conversion rate per UNE Loop, Spreadsheet (per DS0)* | | | UEA | URESP | | 5.69 | 5.69 | | | | | | | | |
| 2-WIRE ISDN DIGITAL GRADE LOOP | | | | | | | | | | | | | | | | |
| | 2-Wire ISDN Digital Grade Loop - Zone 1 | | 1 | UDN | U1L2X | 21.89 | 180.06 | 35.25 | 18.23 | 6.97 | | | | | | |
| | 2-Wire ISDN Digital Grade Loop - Zone 2 | | 2 | UDN | U1L2X | 25.27 | 180.06 | 35.25 | 18.23 | 6.97 | | | | | | |
| | 2-Wire ISDN Digital Grade Loop - Zone 3 | | 3 | UDN | U1L2X | 40.17 | 180.06 | 35.25 | 18.23 | 6.97 | | | | | | |
| 2-WIRE ASYMMETRICAL DIGITAL SUBSCRIBER LINE (ADSL) COMPATIBLE LOOP | | | | | | | | | | | | | | | | |

| UNBUNDLED NETWORK ELEMENTS - Georgia | | | | | | | | | | | | | | Attachement 2 Exh: A | | | |
|---|---|---|---|---|---|---|---|---|---|---|---|---|---|---|---|---|---|
| CATEGORY | | RATE ELEMENTS | Interim | Zone | BCS | USOC | RATES($) | | | | | Svc Order Submitted Elec per LSR | Svc Order Submitted Manually per LSR | Incremental Charge - Manual Svc Order vs. Electronic-1st | Incremental Charge - Manual Svc Order vs. Electronic-Add'l | Incremental Charge - Manual Svc Order vs. Electronic-Disc 1st | Incremental Charge - Manual Svc Order vs. Electronic-Disc Add'l |
| | | | | | | | | Nonrecurring | | Nonrecurring Disconnect | | OSS Rates($) | | | | | |
| | | | | | | | Rec | First | Add'l | First | Add'l | SOMEC | SOMAN | SOMAN | SOMAN | SOMAN | SOMAN |
| | | 2 Wire Unbundled ADSL Loop including manual service inquiry & facility reservation - Zone 1 | | 1 | UAL | UAL2X | 11.23 | 44.69 | 31.55 | 0.00 | 0.00 | | | | | | |
| | | 2 Wire Unbundled ADSL Loop including manual service inquiry & facility reservation - Zone 2 | | 2 | UAL | UAL2X | 12.97 | 44.69 | 31.55 | 0.00 | 0.00 | | | | | | |
| | | 2 Wire Unbundled ADSL Loop including manual service inquiry & facility reservation - Zone 3 | | 3 | UAL | UAL2X | 20.62 | 44.69 | 31.55 | 0.00 | 0.00 | | | | | | |
| | | 2 Wire Unbundled ADSL Loop without manual service inquiry & facility reservaton - Zone 1 | | 1 | UAL | UAL2W | 11.23 | 44.69 | 31.55 | 0.00 | 0.00 | | | | | | |
| | | 2 Wire Unbundled ADSL Loop without manual service inquiry & facility reservaton - Zone 2 | | 2 | UAL | UAL2W | 12.97 | 44.69 | 31.55 | 0.00 | 0.00 | | | | | | |
| | | 2 Wire Unbundled ADSL Loop without manual service inquiry & facility reservaton - Zone 3 | | 3 | UAL | UAL2W | 20.62 | 44.69 | 31.55 | 0.00 | 0.00 | | | | | | |
| | | **2-WIRE HIGH BIT RATE DIGITAL SUBSCRIBER LINE (HDSL) COMPATIBLE LOOP** | | | | | | | | | | | | | | | |
| | | 2 Wire Unbundled HDSL Loop including manual service inquiry & facility reservation - Zone 1 | | 1 | UHL | UHL2X | 7.88 | 44.69 | 31.55 | 0.00 | 0.00 | | | | | | |
| | | 2 Wire Unbundled HDSL Loop including manual service inquiry & facility reservation - Zone 2 | | 2 | UHL | UHL2X | 9.09 | 44.69 | 31.55 | 0.00 | 0.00 | | | | | | |
| | | 2 Wire Unbundled HDSL Loop including manual service inquiry & facility reservation - Zone 3 | | 3 | UHL | UHL2X | 14.48 | 44.69 | 31.55 | 0.00 | 0.00 | | | | | | |
| | | 2 Wire Unbundled HDSL Loop without manual service inquiry and facility reservation - Zone 1 | | 1 | UHL | UHL2W | 7.88 | 44.69 | 31.55 | 0.00 | 0.00 | | | | | | |
| | | 2 Wire Unbundled HDSL Loop without manual service inquiry and facility reservation - Zone 2 | | 2 | UHL | UHL2W | 9.09 | 44.69 | 31.55 | 0.00 | 0.00 | | | | | | |
| | | 2 Wire Unbundled HDSL Loop without manual service inquiry and facility reservation - Zone 3 | | 3 | UHL | UHL2W | 14.48 | 44.69 | 31.55 | 0.00 | 0.00 | | | | | | |
| | | **4-WIRE HIGH BIT RATE DIGITAL SUBSCRIBER LINE (HDSL) COMPATIBLE LOOP** | | | | | | | | | | | | | | | |
| | | 4 Wire Unbundled HDSL Loop including manual service inquiry and facility reservation - Zone 1 | | 1 | UHL | UHL4X | 10.39 | 44.69 | 31.55 | 0.00 | 0.00 | | | | | | |
| | | 4-Wire Unbundled HDSL Loop including manual service inquiry and facility reservation - Zone 2 | | 2 | UHL | UHL4X | 12.00 | 44.69 | 31.55 | 0.00 | 0.00 | | | | | | |
| | | 4-Wire Unbundled HDSL Loop including manual service inquiry and facility reservation - Zone 3 | | 3 | UHL | UHL4X | 19.07 | 44.69 | 31.55 | 0.00 | 0.00 | | | | | | |
| | | 4-Wire Unbundled HDSL Loop without manual service inquiry and facility reservation - Zone 1 | | 1 | UHL | UHL4W | 10.39 | 44.69 | 31.55 | 0.00 | 0.00 | | | | | | |
| | | 4-Wire Unbundled HDSL Loop without manual service inquiry and facility reservation - Zone 2 | | 2 | UHL | UHL4W | 12.00 | 44.69 | 31.55 | 0.00 | 0.00 | | | | | | |
| | | 4-Wire Unbundled HDSL Loop without manual service inquiry and facility reservation - Zone 3 | | 3 | UHL | UHL4W | 19.07 | 44.69 | 31.55 | 0.00 | 0.00 | | | | | | |
| | | **4-WIRE DS1 DIGITAL LOOP** | | | | | | | | | | | | | | | |
| | | 4-Wire DS1 Digital Loop - Zone 1 | | 1 | USL | USLXX | 49.41 | 211.72 | 72.42 | 38.20 | 7.19 | | | | | | |
| | | 4-Wire DS1 Digital Loop - Zone 2 | | 2 | USL | USLXX | 52.55 | 211.72 | 72.42 | 38.20 | 7.19 | | | | | | |
| | | 4-Wire DS1 Digital Loop - Zone 3 | | 3 | USL | USLXX | 68.40 | 211.72 | 72.42 | 38.20 | 7.19 | | | | | | |
| | | Switch-as-is Conversion rate per UNE Loop, Single LSR (per DS1)* | | | USL | URESL | | 5.69 | 5.69 | | | | | | | | |
| | | Switch-as-is Conversion rate per UNE Loop, Spreadsheet (per DS1)* | | | USL | URESP | | 5.69 | 5.69 | | | | | | | | |
| | | **4-WIRE 19.2, 56 OR 64 KBPS DIGITAL GRADE LOOP** | | | | | | | | | | | | | | | |
| | | 4 Wire Unbundled Digital Loop 2.4 Kbps - Zone 1 | | 1 | UDL | UDL2X | 25.81 | 196.47 | 36.96 | 18.80 | 7.19 | | | | | | |
| | | 4 Wire Unbundled Digital Loop 2.4 Kbps - Zone 2 | | 2 | UDL | UDL2X | 31.54 | 196.47 | 36.96 | 18.80 | 7.19 | | | | | | |
| | | 4 Wire Unbundled Digital Loop 2.4 Kbps - Zone 3 | | 3 | UDL | UDL2X | 42.38 | 196.47 | 36.96 | 18.80 | 7.19 | | | | | | |
| | | 4 Wire Unbundled Digital Loop 4.8 Kbps - Zone 1 | | 1 | UDL | UDL4X | 25.81 | 196.47 | 36.96 | 18.80 | 7.19 | | | | | | |
| | | 4 Wire Unbundled Digital Loop 4.8 Kbps - Zone 2 | | 2 | UDL | UDL4X | 31.54 | 196.47 | 36.96 | 18.80 | 7.19 | | | | | | |
| | | 4 Wire Unbundled Digital Loop 4.8 Kbps - Zone 3 | | 3 | UDL | UDL4X | 42.38 | 196.47 | 36.96 | 18.80 | 7.19 | | | | | | |
| | | 4 Wire Unbundled Digital Loop 9.6 Kbps - Zone 1 | | 1 | UDL | UDL9X | 25.81 | 196.47 | 36.96 | 18.80 | 7.19 | | | | | | |
| | | 4 Wire Unbundled Digital Loop 9.6 Kbps - Zone 2 | | 2 | UDL | UDL9X | 31.54 | 196.47 | 36.96 | 18.80 | 7.19 | | | | | | |
| | | 4 Wire Unbundled Digital Loop 9.6 Kbps - Zone 3 | | 3 | UDL | UDL9X | 42.38 | 196.47 | 36.96 | 18.80 | 7.19 | | | | | | |
| | | 4 Wire Unbundled Digital 19.2 Kbps - Zone 1 | | 1 | UDL | UDL19 | 25.81 | 196.47 | 36.96 | 18.80 | 7.19 | | | | | | |
| | | 4 Wire Unbundled Digital 19.2 Kbps - Zone 2 | | 2 | UDL | UDL19 | 31.54 | 196.47 | 36.96 | 18.80 | 7.19 | | | | | | |
| | | 4 Wire Unbundled Digital 19.2 Kbps - Zone 3 | | 3 | UDL | UDL19 | 42.38 | 196.47 | 36.96 | 18.80 | 7.19 | | | | | | |

| UNBUNDLED NETWORK ELEMENTS - Georgia | | | | | | | | | | | | | Attachement 2 Exh: A | | | |
|---|---|---|---|---|---|---|---|---|---|---|---|---|---|---|---|---|
| CATEGORY | | RATE ELEMENTS | Interim | Zone | BCS | USOC | RATES($) | | | | | Svc Order Submitted Elec per LSR | Svc Order Submitted Manually per LSR | Incremental Charge - Manual Svc Order vs. Electronic-1st | Incremental Charge - Manual Svc Order vs. Electronic-Add'l | Incremental Charge - Manual Svc Order vs. Electronic-Disc 1st | Incremental Charge - Manual Svc Order vs. Electronic-Disc Add'l |
| | | | | | | | | Nonrecurring | | Nonrecurring Disconnect | | OSS Rates($) | | | | | |
| | | | | | | | Rec | First | Add'l | First | Add'l | SOMEC | SOMAN | SOMAN | SOMAN | SOMAN | SOMAN |
| | | 4 Wire Unbundled Digital Loop 56 Kbps - Zone 1 | | 1 | UDL | UDL56 | 25.81 | 196.47 | 36.96 | 18.80 | 7.19 | | | | | | |
| | | 4 Wire Unbundled Digital Loop 56 Kbps - Zone 2 | | 2 | UDL | UDL56 | 31.54 | 196.47 | 36.96 | 18.80 | 7.19 | | | | | | |
| | | 4 Wire Unbundled Digital Loop 56 Kbps - Zone 3 | | 3 | UDL | UDL56 | 42.38 | 196.47 | 36.96 | 18.80 | 7.19 | | | | | | |
| | | 4 Wire Unbundled Digital Loop 64 Kbps - Zone 1 | | 1 | UDL | UDL64 | 25.81 | 196.47 | 36.96 | 18.80 | 7.19 | | | | | | |
| | | 4 Wire Unbundled Digital Loop 64 Kbps - Zone 2 | | 2 | UDL | UDL64 | 31.54 | 196.47 | 36.96 | 18.80 | 7.19 | | | | | | |
| | | 4 Wire Unbundled Digital Loop 64 Kbps - Zone 3 | | 3 | UDL | UDL64 | 42.38 | 196.47 | 36.96 | 18.80 | 7.19 | | | | | | |
| | | Switch-as-is Conversion rate per UNE Loop, Single LSR (per DS0)* | | | UDL | URESL | | 5.69 | 5.69 | | | | | | | | |
| | | Switch-as-is Conversion rate per UNE Loop, Spreadsheet (per DS0)* | | | UDL | URESP | | 5.69 | 5.69 | | | | | | | | |
| | **2-WIRE Unbundled COPPER LOOP** | | | | | | | | | | | | | | | | |
| | | 2-Wire Unbundled Copper Loop-Designed including manual service inquiry & facility reservation - Zone 1 | | 1 | UCL | UCLPB | 12.02 | 44.69 | 31.55 | 0.00 | 0.00 | | | | | | |
| | | 2-Wire Unbundled Copper Loop-Designed including manual service inquiry & facility reservation - Zone 2 | | 2 | UCL | UCLPB | 13.88 | 44.69 | 31.55 | 0.00 | 0.00 | | | | | | |
| | | 2 Wire Unbundled Copper Loop-Designed including manual service inquiry & facility reservation - Zone 3 | | 3 | UCL | UCLPB | 22.07 | 44.69 | 31.55 | 0.00 | 0.00 | | | | | | |
| | | 2-Wire Unbundled Copper Loop-Designed without manual service inquiry and facility reservation - Zone 1 | | 1 | UCL | UCLPW | 12.02 | 44.69 | 31.55 | 0.00 | 0.00 | | | | | | |
| | | 2-Wire Unbundled Copper Loop-Designed without manual service inquiry and facility reservation - Zone 2 | | 2 | UCL | UCLPW | 13.88 | 44.69 | 31.55 | 0.00 | 0.00 | | | | | | |
| | | 2-Wire Unbundled Copper Loop-Designed without manual service inquiry and facility reservation - Zone 3 | | 3 | UCL | UCLPW | 22.07 | 44.69 | 31.55 | 0.00 | 0.00 | | | | | | |
| | | Order Coordination for Unbundled Copper Loops (per loop) | | | UCL | UCLMC | | 18.90 | 18.90 | | | | | | | | |
| | **4-WIRE COPPER LOOP** | | | | | | | | | | | | | | | | |
| | | 4-Wire Copper Loop-Designed including manual service inquiry and facility reservation - Zone 1 | | 1 | UCL | UCL4S | 16.65 | 44.69 | 31.55 | 0.00 | 0.00 | | | | | | |
| | | 4-Wire Copper Loop-Designed including manual service inquiry and facility reservation - Zone 2 | | 2 | UCL | UCL4S | 19.22 | 44.69 | 31.55 | 0.00 | 0.00 | | | | | | |
| | | 4-Wire Copper Loop-Designed including manual service inquiry and facility reservation - Zone 3 | | 3 | UCL | UCL4S | 30.55 | 44.69 | 31.55 | 0.00 | 0.00 | | | | | | |
| | | 4-Wire Copper Loop-Designed without manual service inquiry and facility reservation - Zone 1 | | 1 | UCL | UCL4W | 16.65 | 44.69 | 31.55 | 0.00 | 0.00 | | | | | | |
| | | 4-Wire Copper Loop-Designed without manual service inquiry and facility reservation - Zone 2 | | 2 | UCL | UCL4W | 19.22 | 44.69 | 31.55 | 0.00 | 0.00 | | | | | | |
| | | 4-Wire Copper Loop-Designed without manual service inquiry and facility reservation - Zone 3 | | 3 | UCL | UCL4W | 30.55 | 44.69 | 31.55 | 0.00 | 0.00 | | | | | | |
| | | Order Coordination for Unbundled Copper Loops (per loop) | | | UCL | UCLMC | | 18.90 | 18.90 | | | | | | | | |
| | | Order Coordination for Specified Conversion Time (per LSR) | | | UEA, UDN, UAL, UHL, UDL, USL | OCOSL | | 57.73 | | | | | | | | | |
| **UNE LOOP COMMINGLING** | | | | | | | | | | | | | | | | | |
| | **UNE LOOP COMMINGLING (Loop as part of a Multi-bandwidth commingling arrangement)** | | | | | | | | | | | | | | | | |
| | **2-WIRE ANALOG VOICE GRADE LOOP - COMMINGLING** | | | | | | | | | | | | | | | | |
| | | 2-Wire Analog Voice Grade Loop - Service Level 2 w/Loop or Ground Start Signaling - Zone 1 | | 1 | NTCVG | UEAL2 | 13.32 | 79.78 | 24.62 | 18.90 | 7.86 | | | | | | |
| | | 2-Wire Analog Voice Grade Loop - Service Level 2 w/Loop or Ground Start Signaling - Zone 2 | | 2 | NTCVG | UEAL2 | 18.66 | 79.78 | 24.62 | 18.90 | 7.86 | | | | | | |
| | | 2-Wire Analog Voice Grade Loop - Service Level 2 w/Loop or Ground Start Signaling - Zone 3 | | 3 | NTCVG | UEAL2 | 36.33 | 79.78 | 24.62 | 18.90 | 7.86 | | | | | | |
| | | 2-Wire Analog Voice Grade Loop - Service Level 2 w/Reverse Battery Signaling - Zone 1 | | 1 | NTCVG | UEAR2 | 13.32 | 79.78 | 24.62 | 18.90 | 7.86 | | | | | | |
| | | 2-Wire Analog Voice Grade Loop - Service Level 2 w/Reverse Battery Signaling - Zone 2 | | 2 | NTCVG | UEAR2 | 18.66 | 79.78 | 24.62 | 18.90 | 7.86 | | | | | | |
| | | 2-Wire Analog Voice Grade Loop - Service Level 2 w/Reverse Battery Signaling - Zone 3 | | 3 | NTCVG | UEAR2 | 36.33 | 79.78 | 24.62 | 18.90 | 7.86 | | | | | | |
| | | Switch-as-is Conversion rate per UNE Loop, Single LSR (per DS0)* | | | NTCVG | URESL | | 5.69 | 5.69 | | | | | | | | |
| | | Switch-as-is Conversion rate per UNE Loop, Spreadsheet (per DS0)* | | | NTCVG | URESP | | 5.69 | 5.69 | | | | | | | | |

| UNBUNDLED NETWORK ELEMENTS - Georgia | | | | | | | | | | | | | | Attachement 2 Exh: A | | | |
|---|---|---|---|---|---|---|---|---|---|---|---|---|---|---|---|---|---|
| CATEGORY | | RATE ELEMENTS | Interim | Zone | BCS | USOC | RATES($) | | | | | Svc Order Submitted Elec per LSR | Svc Order Submitted Manually per LSR | Incremental Charge - Manual Svc Order vs. Electronic-1st | Incremental Charge - Manual Svc Order vs. Electronic-Add'l | Incremental Charge - Manual Svc Order vs. Electronic-Disc 1st | Incremental Charge - Manual Svc Order vs. Electronic-Disc Add'l |
| | | | | | | | | Nonrecurring | | Nonrecurring Disconnect | | OSS Rates($) | | | | | |
| | | | | | | | Rec | First | Add'l | First | Add'l | SOMEC | SOMAN | SOMAN | SOMAN | SOMAN | SOMAN |
| | **4-WIRE ANALOG VOICE GRADE LOOP** | | | | | | | | | | | | | | | | |
| | | 4-Wire Analog Voice Grade Loop - Zone 1 | | 1 | NTCVG | UEAL4 | 21.04 | 92.92 | 28.14 | 19.50 | 8.12 | | | | | | |
| | | 4-Wire Analog Voice Grade Loop - Zone 2 | | 2 | NTCVG | UEAL4 | 24.49 | 92.92 | 28.14 | 19.50 | 8.12 | | | | | | |
| | | 4-Wire Analog Voice Grade Loop - Zone 3 | | 3 | NTCVG | UEAL4 | 33.40 | 92.92 | 28.14 | 19.50 | 8.12 | | | | | | |
| | | Switch-as-is Conversion rate per UNE Loop, Single LSR (per DS0)* | | | NTCVG | URESL | | 5.69 | 5.69 | | | | | | | | |
| | | Switch-as-is Conversion rate per UNE Loop, Spreadsheet (per DS0)* | | | NTCVG | URESP | | 5.69 | 5.69 | | | | | | | | |
| | **4-WIRE DS1 DIGITAL LOOP - COMMINGLING** | | | | | | | | | | | | | | | | |
| | | 4-Wire DS1 Digital Loop - Zone 1 | | 1 | NTCD1 | USLXX | 49.41 | 211.72 | 72.42 | 38.20 | 7.19 | | | | | | |
| | | 4-Wire DS1 Digital Loop - Zone 2 | | 2 | NTCD1 | USLXX | 52.55 | 211.72 | 72.42 | 38.20 | 7.19 | | | | | | |
| | | 4-Wire DS1 Digital Loop - Zone 3 | | 3 | NTCD1 | USLXX | 68.40 | 211.72 | 72.42 | 38.20 | 7.19 | | | | | | |
| | | Switch-as-is Conversion rate per UNE Loop, Single LSR (per DS1)* | | | NTCD1 | URESL | | 5.69 | 5.69 | | | | | | | | |
| | | Switch-as-is Conversion rate per UNE Loop, Spreadsheet (per DS1)* | | | NTCD1 | URESP | | 5.69 | 5.69 | | | | | | | | |
| | **4-WIRE 19.2, 56 OR 64 KBPS DIGITAL GRADE LOOP - COMMINGLING** | | | | | | | | | | | | | | | | |
| | | 4 Wire Unbundled Digital Loop 2.4 Kbps - Zone 1 | | 1 | NTCUD | UDL2X | 25.81 | 196.47 | 36.96 | 18.80 | 7.19 | | | | | | |
| | | 4 Wire Unbundled Digital Loop 2.4 Kbps - Zone 2 | | 2 | NTCUD | UDL2X | 31.54 | 196.47 | 36.96 | 18.80 | 7.19 | | | | | | |
| | | 4 Wire Unbundled Digital Loop 2.4 Kbps - Zone 3 | | 3 | NTCUD | UDL2X | 42.38 | 196.47 | 36.96 | 18.80 | 7.19 | | | | | | |
| | | 4 Wire Unbundled Digital Loop 4.8 Kbps - Zone 1 | | 1 | NTCUD | UDL4X | 25.81 | 196.47 | 36.96 | 18.80 | 7.19 | | | | | | |
| | | 4 Wire Unbundled Digital Loop 4.8 Kbps - Zone 2 | | 2 | NTCUD | UDL4X | 31.54 | 196.47 | 36.96 | 18.80 | 7.19 | | | | | | |
| | | 4 Wire Unbundled Digital Loop 4.8 Kbps - Zone 3 | | 3 | NTCUD | UDL4X | 42.38 | 196.47 | 36.96 | 18.80 | 7.19 | | | | | | |
| | | 4 Wire Unbundled Digital Loop 9.6 Kbps - Zone 1 | | 1 | NTCUD | UDL9X | 25.81 | 196.47 | 36.96 | 18.80 | 7.19 | | | | | | |
| | | 4 Wire Unbundled Digital Loop 9.6 Kbps - Zone 2 | | 2 | NTCUD | UDL9X | 31.54 | 196.47 | 36.96 | 18.80 | 7.19 | | | | | | |
| | | 4 Wire Unbundled Digital Loop 9.6 Kbps - Zone 3 | | 3 | NTCUD | UDL9X | 42.38 | 196.47 | 36.96 | 18.80 | 7.19 | | | | | | |
| | | 4 Wire Unbundled Digital 19.2 Kbps - Zone 1 | | 1 | NTCUD | UDL19 | 25.81 | 196.47 | 36.96 | 18.80 | 7.19 | | | | | | |
| | | 4 Wire Unbundled Digital 19.2 Kbps - Zone 2 | | 2 | NTCUD | UDL19 | 31.54 | 196.47 | 36.96 | 18.80 | 7.19 | | | | | | |
| | | 4 Wire Unbundled Digital 19.2 Kbps - Zone 3 | | 3 | NTCUD | UDL19 | 42.38 | 196.47 | 36.96 | 18.80 | 7.19 | | | | | | |
| | | 4 Wire Unbundled Digital Loop 56 Kbps - Zone 1 | | 1 | NTCUD | UDL56 | 25.81 | 196.47 | 36.96 | 18.80 | 7.19 | | | | | | |
| | | 4 Wire Unbundled Digital Loop 56 Kbps - Zone 2 | | 2 | NTCUD | UDL56 | 31.54 | 196.47 | 36.96 | 18.80 | 7.19 | | | | | | |
| | | 4 Wire Unbundled Digital Loop 56 Kbps - Zone 3 | | 3 | NTCUD | UDL56 | 42.38 | 196.47 | 36.96 | 18.80 | 7.19 | | | | | | |
| | | 4 Wire Unbundled Digital Loop 64 Kbps - Zone 1 | | 1 | NTCUD | UDL64 | 25.81 | 196.47 | 36.96 | 18.80 | 7.19 | | | | | | |
| | | 4 Wire Unbundled Digital Loop 64 Kbps - Zone 2 | | 2 | NTCUD | UDL64 | 31.54 | 196.47 | 36.96 | 18.80 | 7.19 | | | | | | |
| | | 4 Wire Unbundled Digital Loop 64 Kbps - Zone 3 | | 3 | NTCUD | UDL64 | 42.38 | 196.47 | 36.96 | 18.80 | 7.19 | | | | | | |
| | | Order Coordination for Specified Conversion Time (per LSR) | | | NTCVG, NTCUD, NTCD1 | OCOSL | | 57.73 | | | | | | | | | |
| | | Switch-as-is Conversion rate per UNE Loop, Single LSR (per DS0)* | | | NTCUD | URESL | | 5.69 | 5.69 | | | | | | | | |
| | | Switch-as-is Conversion rate per UNE Loop, Spreadsheet (per DS0)* | | | NTCUD | URESP | | 5.69 | 5.69 | | | | | | | | |
| **LOOP MODIFICATION** | | | | | | | | | | | | | | | | | |
| | | Unbundled Loop Modification, Removal of Load Coils - 2 Wire pair less than or equal to 18k ft, per Unbundled Loop | | | UAL, UHL, UCL, UEQ, ULS, UEA, UEANL, UEPSR, UEPSB | ULM2L | | 0.00 | 0.00 | | | | | | | | |
| | | Unbundled Loop Modification Removal of Load Coils - 4 Wire less than or equal to 18K ft, per Unbundled Loop | | | UHL, UCL, UEA | ULM4L | | 0.00 | 0.00 | | | | | | | | |
| | | Unbundled Loop Modification Removal of Bridged Tap Removal, per Unbundled Loop | | | UAL, UHL, UCL, UEQ, ULS, UEA, UEANL, UEPSR, UEPSB | ULMBT | | 17.91 | | | | | | | | | |
| **SUB-LOOPS** | | | | | | | | | | | | | | | | | |
| | **Sub-Loop Distribution** | | | | | | | | | | | | | | | | |
| | | Sub-Loop - Per Cross Box Location - CLEC Feeder Facility Set-Up | | | UEANL, UEF | USBSA | | 255.51 | | | | | | | | | |
| | | Sub-Loop - Per Cross Box Location - Per 25 Pair Panel Set-Up | | | UEANL, UEF | USBSB | | 7.29 | | | | | | | | | |

| UNBUNDLED NETWORK ELEMENTS - Georgia | | | | | | | | | | | | | | Attachement 2 Exh: A | | | |
|---|---|---|---|---|---|---|---|---|---|---|---|---|---|---|---|---|---|
| CATEGORY | | RATE ELEMENTS | Interim | Zone | BCS | USOC | RATES($) | | | | | Svc Order Submitted Elec per LSR | Svc Order Submitted Manually per LSR | Incremental Charge - Manual Svc Order vs. Electronic-1st | Incremental Charge - Manual Svc Order vs. Electronic-Add'l | Incremental Charge - Manual Svc Order vs. Electronic-Disc 1st | Incremental Charge - Manual Svc Order vs. Electronic-Disc Add'l |
| | | | | | | | | Nonrecurring | | Nonrecurring Disconnect | | OSS Rates($) | | | | | |
| | | | | | | | Rec | First | Add'l | First | Add'l | SOMEC | SOMAN | SOMAN | SOMAN | SOMAN | SOMAN |
| | | Sub-Loop - Per Building Equipment Room - CLEC Feeder Facility Set-Up | | | UEANL | USBSC | | 174.92 | | | | | | | | | |
| | | Sub-Loop - Per Building Equipment Room - Per 25 Pair Panel Set-Up | | | UEANL | USBSD | | 51.56 | | | | | | | | | |
| | | Unbundled Sub-Loops, Riser Cable, 2-Wire per Loop, Working and Spare Loop Activation | | | UEANL | USBRC | 3.71 | 28.43 | 3.85 | 2.20 | 0.01 | | | | | | |
| | | Unbundled Sub-Loops, Riser Cable, 4-Wire per Loop, Working and Spare Loop Activation | | | UEANL | USBRD | 7.90 | 31.04 | 4.79 | 2.27 | 0.01 | | | | | | |
| | | Sub-Loop Distribution Per 2-Wire Analog Voice Grade Loop - Zone 1 | | 1 | UEANL | USBN2 | 7.45 | 28.43 | 3.85 | 2.20 | 0.01 | | | | | | |
| | | Sub-Loop Distribution Per 2-Wire Analog Voice Grade Loop - Zone 2 | | 2 | UEANL | USBN2 | 11.18 | 28.43 | 3.85 | 2.20 | 0.01 | | | | | | |
| | | Sub-Loop Distribution Per 2-Wire Analog Voice Grade Loop - Zone 3 | | 3 | UEANL | USBN2 | 21.46 | 28.43 | 3.85 | 2.20 | 0.01 | | | | | | |
| | | Sub-Loop Distribution Per 4-Wire Analog Voice Grade Loop - Zone 1 | | 1 | UEANL | USBN4 | 6.91 | 31.04 | 4.79 | 2.27 | 0.01 | | | | | | |
| | | Sub-Loop Distribution Per 4-Wire Analog Voice Grade Loop - Zone 2 | | 2 | UEANL | USBN4 | 10.98 | 31.04 | 4.79 | 2.27 | 0.01 | | | | | | |
| | | Sub-Loop Distribution Per 4-Wire Analog Voice Grade Loop - Zone 3 | | 3 | UEANL | USBN4 | 20.32 | 31.04 | 4.79 | 2.27 | 0.01 | | | | | | |
| | | Order Coordination for Unbundled Sub-Loops, per sub-loop pair | | | UEANL | USBMC | | 18.90 | 18.90 | | | | | | | | |
| | | Sub-Loop 2-Wire Intrabuilding Network Cable (INC) | | | UEANL | USBR2 | 3.71 | 28.43 | 3.85 | 2.20 | 0.01 | | | | | | |
| | | Order Coordination for Unbundled Sub-Loops, per sub-loop pair | | | UEANL | USBMC | | 18.90 | 18.90 | | | | | | | | |
| | | Sub-Loop 4-Wire Intrabuilding Network Cable (INC) | | | UEANL | USBR4 | 7.90 | 31.04 | 4.79 | 2.27 | 0.01 | | | | | | |
| | | Order Coordination for Unbundled Sub-Loops, per sub-loop pair | | | UEANL | USBMC | | 18.90 | 18.90 | | | | | | | | |
| | | 2 Wire Copper Unbundled Sub-Loop Distribution - Zone 1 | | 1 | UEF | UCS2X | 6.88 | 28.43 | 3.85 | 2.20 | 0.01 | | | | | | |
| | | 2 Wire Copper Unbundled Sub-Loop Distribution - Zone 2 | | 2 | UEF | UCS2X | 8.32 | 28.43 | 3.85 | 2.20 | 0.01 | | | | | | |
| | | 2 Wire Copper Unbundled Sub-Loop Distribution - Zone 3 | | 3 | UEF | UCS2X | 10.26 | 28.43 | 3.85 | 2.20 | 0.01 | | | | | | |
| | | Order Coordination for Unbundled Sub-Loops, per sub-loop pair | | | UEF | USBMC | | 18.90 | 18.90 | | | | | | | | |
| | | 4 Wire Copper Unbundled Sub-Loop Distribution - Zone 1 | | 1 | UEF | UCS4X | 7.55 | 31.04 | 4.79 | 2.27 | 0.01 | | | | | | |
| | | 4 Wire Copper Unbundled Sub-Loop Distribution - Zone 2 | | 2 | UEF | UCS4X | 7.12 | 31.04 | 4.79 | 2.27 | 0.01 | | | | | | |
| | | 4 Wire Copper Unbundled Sub-Loop Distribution - Zone 3 | | 3 | UEF | UCS4X | 10.26 | 31.04 | 4.79 | 2.27 | 0.01 | | | | | | |
| | | Order Coordination for Unbundled Sub-Loops, per sub-loop pair | | | UEF | USBMC | | 18.90 | 18.90 | | | | | | | | |
| | **Unbundled Sub-Loop Modification** | | | | | | | | | | | | | | | | |
| | | Unbundled Sub-Loop Modification - 2-W Copper Dist Load Coil/Equip Removal per 2-W PR | | | UEF | ULM2X | | 0.00 | 0.00 | | | | | | | | |
| | | Unbundled Sub-loop Modification - 4-W Copper Dist Load Coil/Equip Removal per 4-W PR | | | UEF | ULM4X | | 0.00 | 0.00 | | | | | | | | |
| | | Unbundled Loop Modification, Removal of bridge Tap, per unbundled loop | | | UEF | ULMBT | | 0.00 | 0.00 | | | | | | | | |
| | **Unbundled Network Terminating Wire (UNTW)** | | | | | | | | | | | | | | | | |
| | | Unbundled Network Terminating Wire (UNTW) per Pair | | | UENTW | UENPP | 0.5325 | 25.10 | 12.27 | | | | | | | | |
| | **Network Interface Device (NID)** | | | | | | | | | | | | | | | | |
| | | Network Interface Device (NID) - 1-2 lines | | | UENTW | UND12 | | 32.82 | 20.67 | | | | | | | | |
| | | Network Interface Device (NID) - 1-6 lines | | | UENTW | UND16 | | 55.97 | 43.82 | | | | | | | | |
| | | Network Interface Device Cross Connect - 2 W | | | UENTW | UNDC2 | | 2.45 | 2.45 | | | | | | | | |
| | | Network Interface Device Cross Connect - 4W | | | UENTW | UNDC4 | | 2.45 | 2.45 | | | | | | | | |
| **LOOP MAKE-UP** | | | | | | | | | | | | | | | | | |
| | | Loop Makeup - Preordering Without Reservation, per working or spare facility queried (Manual). | | | UMK | UMKLW | | 15.18 | 15.18 | | | | | | | | |
| | | Loop Makeup - Preordering With Reservation, per spare facility queried (Manual). | | | UMK | UMKLP | | 19.83 | 19.83 | | | | | | | | |
| | | Loop Makeup--With or Without Reservation, per working or spare facility queried (Mechanized) | | | UMK | UMKMQ | | 0.823 | 0.823 | | | | | | | | |

| UNBUNDLED NETWORK ELEMENTS - Georgia | | | | | | | | | | | | | | Attachement 2 Exh: A | | | |
|---|---|---|---|---|---|---|---|---|---|---|---|---|---|---|---|---|---|
| CATEGORY | | RATE ELEMENTS | Interim | Zone | BCS | USOC | RATES($) | | | | | Svc Order Submitted Elec per LSR | Svc Order Submitted Manually per LSR | Incremental Charge - Manual Svc Order vs. Electronic-1st | Incremental Charge - Manual Svc Order vs. Electronic-Add'l | Incremental Charge - Manual Svc Order vs. Electronic-Disc 1st | Incremental Charge - Manual Svc Order vs. Electronic-Disc Add'l |
| | | | | | | | | Nonrecurring | | Nonrecurring Disconnect | | OSS Rates($) | | | | | |
| | | | | | | | Rec | First | Add'l | First | Add'l | SOMEC | SOMAN | SOMAN | SOMAN | SOMAN | SOMAN |
| LINE SPLITTING | | | | | | | | | | | | | | | | | |
| | END USER ORDERING-CENTRAL OFFICE BASED | | | | | | | | | | | | | | | | |
| | | Line Splitting - per line activation BST owned - physical | | | UEPSR UEPSB | UREBP | 0.0197 | 34.43 | 22.35 | 10.38 | 7.34 | | | | | | |
| | | Line Splitting - per line activation BST owned - virtual | | | UEPSR UEPSB | UREBV | 0.0188 | 34.43 | 22.35 | 10.38 | 7.34 | | | | | | |
| | PHYSICAL COLLOCATION | | | | | | | | | | | | | | | | |
| | | Physical Collocation-2 Wire Cross Connects (Loop) for Line Splitting | | | UEPSR UEPSB | PE1LS | 0.0202 | 0.00 | 0.00 | | | | | | | | |
| | VIRTUAL COLLOCATION | | | | | | | | | | | | | | | | |
| | | Virtual Collocation-2 Wire Cross Connects (Loop) for Line Splitting | | | UEPSR UEPSB | VE1LS | 0.0192 | 0.00 | 0.00 | 0.00 | 0.00 | | | | | | |
| UNBUNDLED DEDICATED TRANSPORT | | | | | | | | | | | | | | | | | |
| | INTEROFFICE CHANNEL - DEDICATED TRANSPORT | | | | | | | | | | | | | | | | |
| | | Interoffice Channel - 2-Wire Voice Grade - per mile | | | U1TVX | 1L5XX | 0.0059 | | | | | | | | | | |
| | | Interoffice Channel - 2-Wire Voice Grade - Facility Termination | | | U1TVX | U1TV2 | 13.15 | 48.41 | 19.46 | 16.56 | 4.99 | | | | | | |
| | | Interoffice Channel - 2-Wire Voice Grade Rev Bat. - per mile | | | U1TVX | 1L5XX | 0.0059 | | | | | | | | | | |
| | | Interoffice Channel - 2-Wire VG Rev Bat. - Facility Termination | | | U1TVX | U1TR2 | 13.15 | 48.41 | 19.46 | 16.56 | 4.99 | | | | | | |
| | | Interoffice Channel - 4-Wire Voice Grade - per mile | | | U1TVX | 1L5XX | 0.0059 | | | | | | | | | | |
| | | Interoffice Channel - 4- Wire Voice Grade - Facility Termination | | | U1TVX | U1TV4 | 11.01 | 48.41 | 19.46 | 16.56 | 4.99 | | | | | | |
| | | Interoffice Channel - 56 kbps - per mile | | | U1TDX | 1L5XX | 0.0059 | | | | | | | | | | |
| | | Interoffice Channel - 56 kbps - Facility Termination | | | U1TDX | U1TD5 | 8.00 | 48.41 | 19.46 | 16.56 | 4.99 | | | | | | |
| | | Interoffice Channel - 64 kbps - per mile | | | U1TDX | 1L5XX | 0.0059 | | | | | | | | | | |
| | | Interoffice Channel - 64 kbps - Facility Termination | | | U1TDX | U1TD6 | 8.00 | 48.41 | 19.46 | 16.56 | 4.99 | | | | | | |
| | | Interoffice Channel - DS1 - per mile | | | U1TD1 | 1L5XX | 0.1199 | | | | | | | | | | |
| | | Interoffice Channel - DS1 - Facility Termination | | | U1TD1 | U1TF1 | 34.93 | 110.92 | 80.20 | 31.33 | 21.71 | | | | | | |
| | | Interoffice Channel - DS3 - per mile | | | U1TD3 | 1L5XX | 2.63 | | | | | | | | | | |
| | | Interoffice Channel - DS3 - Facility Termination | | | U1TD3 | U1TF3 | 349.42 | 320.16 | 86.24 | 66.71 | 52.76 | | | | | | |
| | | Interoffice Channel - STS-1 - per mile | | | U1TS1 | 1L5XX | 2.63 | | | | | | | | | | |
| | | Interoffice Channel - STS-1 - Facility Termination | | | U1TS1 | U1TFS | 366.43 | 320.16 | 86.24 | 66.71 | 52.76 | | | | | | |
| | UNBUNDLED DARK FIBER | | | | | | | | | | | | | | | | |
| | | Dark Fiber - Interoffice Transport, Per Four Fiber Strands, Per Route Mile Or Fraction Thereof | | | UDF, UDFCX | 1L5DF | 24.17 | | | | | | | | | | |
| | | Dark Fiber - Interoffice Transport, Per Four Fiber Strands, Per Route Mile Or Fraction Thereof | | | UDF, UDFCX | UDF14 | | 1,774.79 | 89.66 | 73.57 | 18.69 | | | | | | |
| HIGH CAPACITY UNBUNDLED LOCAL LOOP | | | | | | | | | | | | | | | | | |
| | DS-3/STS-1 UNBUNDLED LOCAL LOOP - Stand Alone | | | | | | | | | | | | | | | | |
| | | DS3 Unbundled Local Loop - per mile | | | UE3 | 1L5ND | 11.40 | | | | | | | | | | |
| | | DS3 Unbundled Local Loop - Facility Termination | | | UE3 | UE3PX | 258.44 | 1,751.51 | 131.77 | 112.80 | 75.81 | | | | | | |
| | | STS-1Unbundled Local Loop - per mile | | | UDLSX | 1L5ND | 11.40 | | | | | | | | | | |
| | | STS-1 Unbundled Local Loop - Facility Termination | | | UDLSX | UDLS1 | 311.51 | 1,751.51 | 131.77 | 112.80 | 75.81 | | | | | | |
| ENHANCED EXTENDED LINK (EELs) | | | | | | | | | | | | | | | | | |
| | Network Elements Used in Combinations | | | | | | | | | | | | | | | | |
| | | 2-Wire VG Loop (SL2) in Combination - Zone 1 | | 1 | UNCVX | UEAL2 | 13.32 | 195.75 | 36.35 | 18.40 | 6.86 | | | | | | |
| | | 2-Wire VG Loop (SL2) in Combination - Zone 2 | | 2 | UNCVX | UEAL2 | 18.66 | 195.75 | 36.35 | 18.40 | 6.86 | | | | | | |
| | | 2-Wire VG Loop (SL2) in Combination - Zone 3 | | 3 | UNCVX | UEAL2 | 36.33 | 195.75 | 36.35 | 18.40 | 6.86 | | | | | | |
| | | 4-Wire Analog Voice Grade Loop in Combination - Zone 1 | | 1 | UNCVX | UEAL4 | 21.04 | 195.75 | 36.35 | 18.40 | 6.86 | | | | | | |
| | | 4-Wire Analog Voice Grade Loop in Combination - Zone 2 | | 2 | UNCVX | UEAL4 | 24.49 | 195.75 | 36.35 | 18.40 | 6.86 | | | | | | |
| | | 4-Wire Analog Voice Grade Loop in Combination - Zone 3 | | 3 | UNCVX | UEAL4 | 33.40 | 195.75 | 36.35 | 18.40 | 6.86 | | | | | | |
| | | 2-Wire ISDN Loop in Combination - Zone 1 | | 1 | UNCNX | U1L2X | 21.89 | 195.75 | 36.35 | 18.40 | 6.86 | | | | | | |
| | | 2-Wire ISDN Loop in Combination - Zone 2 | | 2 | UNCNX | U1L2X | 25.27 | 195.75 | 36.35 | 18.40 | 6.86 | | | | | | |
| | | 2-Wire ISDN Loop in Combination - Zone 3 | | 3 | UNCNX | U1L2X | 40.17 | 195.75 | 36.35 | 18.40 | 6.86 | | | | | | |
| | | 4-Wire 56Kbps Digital Grade Loop in Combination - Zone 1 | | 1 | UNCDX | UDL56 | 25.81 | 195.75 | 36.35 | 18.40 | 6.86 | | | | | | |
| | | 4-Wire 56Kbps Digital Grade Loop in Combination - Zone 2 | | 2 | UNCDX | UDL56 | 31.54 | 195.75 | 36.35 | 18.40 | 6.86 | | | | | | |
| | | 4-Wire 56Kbps Digital Grade Loop in Combination - Zone 3 | | 3 | UNCDX | UDL56 | 42.38 | 195.75 | 36.35 | 18.40 | 6.86 | | | | | | |
| | | 4-Wire 64Kbps Digital Grade Loop in Combination - Zone 1 | | 1 | UNCDX | UDL64 | 25.81 | 195.75 | 36.35 | 18.40 | 6.86 | | | | | | |
| | | 4-Wire 64Kbps Digital Grade Loop in Combination - Zone 2 | | 2 | UNCDX | UDL64 | 31.54 | 195.75 | 36.35 | 18.40 | 6.86 | | | | | | |
| | | 4-Wire 64Kbps Digital Grade Loop in Combination - Zone 3 | | 3 | UNCDX | UDL64 | 42.38 | 195.75 | 36.35 | 18.40 | 6.86 | | | | | | |
| | | 4-Wire DS1 Digital Loop in Combination - Zone 1 | | 1 | UNC1X | USLXX | 49.41 | 209.25 | 70.37 | 37.87 | 6.86 | | | | | | |

| UNBUNDLED NETWORK ELEMENTS - Georgia | | | | | | | | | | | | | Attachement 2 Exh: A | | | |
|---|---|---|---|---|---|---|---|---|---|---|---|---|---|---|---|---|
| CATEGORY | RATE ELEMENTS | Interim | Zone | BCS | USOC | RATES($) | | | | | Svc Order Submitted Elec per LSR | Svc Order Submitted Manually per LSR | Incremental Charge - Manual Svc Order vs. Electronic-1st | Incremental Charge - Manual Svc Order vs. Electronic-Add'l | Incremental Charge - Manual Svc Order vs. Electronic-Disc 1st | Incremental Charge - Manual Svc Order vs. Electronic-Disc Add'l |
| | | | | | | | Nonrecurring | | Nonrecurring Disconnect | | OSS Rates($) | | | | | |
| | | | | | | Rec | First | Add'l | First | Add'l | SOMEC | SOMAN | SOMAN | SOMAN | SOMAN | SOMAN |
| | 4-Wire DS1 Digital Loop in Combination - Zone 2 | | 2 | UNC1X | USLXX | 52.55 | 209.25 | 70.37 | 37.87 | 6.86 | | | | | | |
| | 4-Wire DS1 Digital Loop in Combination - Zone 3 | | 3 | UNC1X | USLXX | 68.40 | 209.25 | 70.37 | 37.87 | 6.86 | | | | | | |
| | DS3 Local Loop in combination - per mile | | | UNC3X | 1L5ND | 11.40 | | | | | | | | | | |
| | DS3 Local Loop in combination - Facility Termination | | | UNC3X | UE3PX | 258.44 | 1,259.23 | 628.22 | 41.49 | 20.74 | | | | | | |
| | STS-1 Local Loop in combination - per mile | | | UNCSX | 1L5ND | 11.40 | | | | | | | | | | |
| | STS-1 Local Loop in combination - Facility Termination | | | UNCSX | UDLS1 | 311.51 | 1,259.23 | 628.22 | 41.49 | 20.74 | | | | | | |
| | Interoffice Channel in combination - 2-wire VG - per mile | | | UNCVX | 1L5XX | 0.0059 | | | | | | | | | | |
| | Interoffice Channel in combination - 2-wire VG - Facility Termination | | | UNCVX | U1TV2 | 13.15 | 66.47 | 33.57 | 43.38 | 27.57 | | | | | | |
| | Interoffice Channel in combination - 4-wire VG - per mile | | | UNCVX | 1L5XX | 0.0059 | | | | | | | | | | |
| | Interoffice Channel in combination - 4-wire VG - Facility Termination | | | UNCVX | U1TV4 | 11.01 | 66.47 | 33.57 | 43.38 | 27.57 | | | | | | |
| | Interoffice Channel in combination - 4-wire 56 kbps - per mile | | | UNCDX | 1L5XX | 0.0059 | | | | | | | | | | |
| | Interoffice Channel in combination - 4-wire 56 kbps - Facility Termination | | | UNCDX | U1TD5 | 8.00 | 66.47 | 33.57 | 43.38 | 27.57 | | | | | | |
| | Interoffice Channel in combination - 4-wire 64 kbps - per mile | | | UNCDX | 1L5XX | 0.0059 | | | | | | | | | | |
| | Interoffice Channel in combination - 4-wire 64 kbps - Facility Termination | | | UNCDX | U1TD6 | 8.00 | 66.47 | 33.57 | 43.38 | 27.57 | | | | | | |
| | Interoffice Channel in combination - DS1 - per mile | | | UNC1X | 1L5XX | 0.1199 | | | | | | | | | | |
| | Interoffice Channel in combination - DS1 Facility Termination | | | UNC1X | U1TF1 | 34.93 | 87.67 | 45.69 | 43.76 | 27.95 | | | | | | |
| | Interoffice Channel in combination - DS3 - per mile | | | UNC3X | 1L5XX | 2.63 | | | | | | | | | | |
| | Interoffice Channel in combination - DS3 - Facility Termination | | | UNC3X | U1TF3 | 349.42 | 325.59 | 76.99 | 49.51 | 32.85 | | | | | | |
| | Interoffice Channel in combination - STS-1 - per mile | | | UNCSX | 1L5XX | 2.63 | | | | | | | | | | |
| | Interoffice Channel in combination - STS-1 Facility Termination | | | UNCSX | U1TFS | 366.43 | 325.59 | 76.99 | 49.51 | 32.85 | | | | | | |
| **ADDITIONAL NETWORK ELEMENTS** | | | | | | | | | | | | | | | | |
| | **Optional Features & Functions:** | | | | | | | | | | | | | | | |
| | DS1/DS0 Channel System | | | UNC1X | MQ1 | 71.23 | 86.01 | 0.00 | 0.00 | 0.00 | | | | | | |
| | DS3/DS1Channel System | | | UNC3X, UNCSX | MQ3 | 124.39 | 0.00 | 0.00 | 0.00 | 0.00 | | | | | | |
| | Voice Grade COCI in combination | | | UNCVX | 1D1VG | 0.479 | 27.30 | 2.90 | 16.85 | 1.04 | | | | | | |
| | Voice Grade COCI - for Stand Alone Local Loop | | | UEA | 1D1VG | 0.479 | 27.30 | 2.90 | 16.85 | 1.04 | | | | | | |
| | Voice Grade COCI - for connection to a channelized DS1 Local Channel in the same SWC as collocation | | | U1TUC | 1D1VG | 0.479 | 27.30 | 2.90 | 16.85 | 1.04 | | | | | | |
| | OCU-DP COCI (2.4-64kbs) in combination | | | UNCDX | 1D1DD | 1.02 | 27.30 | 2.90 | 16.85 | 1.04 | | | | | | |
| | OCU-DP COCI (2.4-64kbs) - for Stand Alone Local Loop | | | UDL | 1D1DD | 1.02 | 27.30 | 2.90 | 16.85 | 1.04 | | | | | | |
| | OCU-DP COCI (2.4-64kbs) - for connection to a channelized DS1 Local Channel in the same SWC as collocation | | | U1TUD | 1D1DD | 1.02 | 27.30 | 2.90 | 16.85 | 1.04 | | | | | | |
| | 2-wire ISDN COCI (BRITE) in combination | | | UNCNX | UC1CA | 1.70 | 27.30 | 2.90 | 16.85 | 1.04 | | | | | | |
| | 2-wire ISDN COCI (BRITE) - for a Local Loop | | | UDN | UC1CA | 1.70 | 27.30 | 2.90 | 16.85 | 1.04 | | | | | | |
| | 2-wire ISDN COCI (BRITE) - for connection to a channelized DS1 Local Channel in the same SWC as collocation | | | U1TUB | UC1CA | 1.70 | 27.30 | 2.90 | 16.85 | 1.04 | | | | | | |
| | DS1 COCI in combination | | | UNC1X | UC1D1 | 7.50 | 27.30 | 2.90 | 16.85 | 1.04 | | | | | | |
| | DS1 COCI - for Stand Alone Local Channel | | | ULDD1 | UC1D1 | 7.50 | 27.30 | 2.90 | 16.85 | 1.04 | | | | | | |
| | DS1 COCI - for Stand Alone Interoffice Channel | | | U1TD1 | UC1D1 | 7.50 | 27.30 | 2.90 | 16.85 | 1.04 | | | | | | |
| | DS1 COCI - for Stand Alone Local Loop | | | USL | UC1D1 | 7.50 | 27.30 | 2.90 | 16.85 | 1.04 | | | | | | |
| | DS1 COCI - for connection to a channelized DS1 Local Channel in the same SWC as collocation | | | U1TUA | UC1D1 | 7.50 | 27.30 | 2.90 | 16.85 | 1.04 | | | | | | |
| | Wholesale to UNE, Switch-As-Is Conversion Charge* | | | UNCVX, U1TVX, UNCDX, U1TDX, UNC1X, U1TD1,UNC3X, U1TD3, UNCSX, U1TS1, UDF,UDFCX | UNCCC | | 5.69 | 5.69 | 6.60 | 6.60 | | | | | | | |
| | **Access to DCS - Customer Reconfiguration (FlexServ)** | | | | | | | | | | | | | | | |
| | Customer Reconfiguration Establishment | | | | | | 1.40 | | 1.63 | | | | | | | |
| | DS1 DCS Termination with DS0 Switching | | | | | 20.08 | 24.87 | 18.91 | 15.02 | 11.94 | | | | | | |
| | DS1 DCS Termination with DS1 Switching | | | | | 7.24 | 18.16 | 12.19 | 11.13 | 8.05 | | | | | | |
| | DS3 DCS Termination with DS1 Switching | | | | | 128.34 | 24.87 | 18.91 | 15.02 | 11.94 | | | | | | |
| **COMMINGLING** | | | | | | | | | | | | | | | | |

| UNBUNDLED NETWORK ELEMENTS - Georgia | | | | | | | | | | | | | Attachement 2 Exh: A | | | |
|---|---|---|---|---|---|---|---|---|---|---|---|---|---|---|---|---|
| CATEGORY | RATE ELEMENTS | Interim | Zone | BCS | USOC | RATES($) | | | | | Svc Order Submitted Elec per LSR | Svc Order Submitted Manually per LSR | Incremental Charge - Manual Svc Order vs. Electronic-1st | Incremental Charge - Manual Svc Order vs. Electronic-Add'l | Incremental Charge - Manual Svc Order vs. Electronic-Disc 1st | Incremental Charge - Manual Svc Order vs. Electronic-Disc Add'l |
| | | | | | | | Nonrecurring | | Nonrecurring Disconnect | | OSS Rates($) | | | | | |
| | | | | | | Rec | First | Add'l | First | Add'l | SOMEC | SOMAN | SOMAN | SOMAN | SOMAN | SOMAN |
| | **Commingled (UNE part of single bandwidth circuit)** | | | | | | | | | | | | | | | |
| | Commingled VG COCI | | | XDV2X, NTCVG | 1D1VG | 0.479 | 27.30 | 2.90 | 16.85 | 1.04 | | | | | | |
| | Commingled Digital COCI | | | XDV6X, NTCUD | 1D1DD | 1.02 | 27.30 | 2.90 | 16.85 | 1.04 | | | | | | |
| | Commingled ISDN COCI | | | XDD4X | UC1CA | 1.70 | 27.30 | 2.90 | 16.85 | 1.04 | | | | | | |
| | Commingled 2-wire VG Interoffice Channel | | | XDV2X | U1TV2 | 13.15 | 66.47 | 33.57 | 43.38 | 27.57 | | | | | | |
| | Commingled 4-wire VG Interoffice Channel | | | XDV6X | U1TV4 | 11.01 | 66.47 | 33.57 | 43.38 | 27.57 | | | | | | |
| | Commingled 56kbps Interoffice Channel | | | XDD4X | U1TD5 | 8.00 | 66.47 | 33.57 | 43.38 | 27.57 | | | | | | |
| | Commingled 64kbps Interoffice Channel | | | XDD4X | U1TD6 | 8.00 | 66.47 | 33.57 | 43.38 | 27.57 | | | | | | |
| | Commingled VG/DS0 Interoffice Channel Mileage | | | XDV2X, XDV6X, XDD4X | 1L5XX | 0.0059 | | | | | | | | | | |
| | Commingled 2-wire Local Loop Zone 1 | | 1 | XDV2X | UEAL2 | 13.32 | 195.75 | 36.35 | 18.40 | 6.86 | | | | | | |
| | Commingled 2-wire Local Loop Zone 2 | | 2 | XDV2X | UEAL2 | 18.66 | 195.75 | 36.35 | 18.40 | 6.86 | | | | | | |
| | Commingled 2-wire Local Loop Zone 3 | | 3 | XDV2X | UEAL2 | 36.33 | 195.75 | 36.35 | 18.40 | 6.86 | | | | | | |
| | Commingled 4-wire Local Loop Zone 1 | | 1 | XDV6X | UEAL4 | 21.04 | 195.75 | 36.35 | 18.40 | 6.86 | | | | | | |
| | Commingled 4-wire Local Loop Zone 2 | | 2 | XDV6X | UEAL4 | 24.49 | 195.75 | 36.35 | 18.40 | 6.86 | | | | | | |
| | Commingled 4-wire Local Loop Zone 3 | | 3 | XDV6X | UEAL4 | 33.40 | 195.75 | 36.35 | 18.40 | 6.86 | | | | | | |
| | Commingled 56kbps Local Loop Zone 1 | | 1 | XDD4X | UDL56 | 25.81 | 195.75 | 36.35 | 18.40 | 6.86 | | | | | | |
| | Commingled 56kbps Local Loop Zone 2 | | 2 | XDD4X | UDL56 | 31.54 | 195.75 | 36.35 | 18.40 | 6.86 | | | | | | |
| | Commingled 56kbps Local Loop Zone 3 | | 3 | XDD4X | UDL56 | 42.38 | 195.75 | 36.35 | 18.40 | 6.86 | | | | | | |
| | Commingled 64kbps Local Loop Zone 1 | | 1 | XDD4X | UDL64 | 25.81 | 195.75 | 36.35 | 18.40 | 6.86 | | | | | | |
| | Commingled 64kbps Local Loop Zone 2 | | 2 | XDD4X | UDL64 | 31.54 | 195.75 | 36.35 | 18.40 | 6.86 | | | | | | |
| | Commingled 64kbps Local Loop Zone 3 | | 3 | XDD4X | UDL64 | 42.38 | 195.75 | 36.35 | 18.40 | 6.86 | | | | | | |
| | Commingled ISDN Local Loop Zone 1 | | 1 | XDD4X | U1L2X | 21.89 | 195.75 | 36.35 | 18.40 | 6.86 | | | | | | |
| | Commingled ISDN Local Loop Zone 2 | | 2 | XDD4X | U1L2X | 25.27 | 195.75 | 36.35 | 18.40 | 6.86 | | | | | | |
| | Commingled ISDN Local Loop Zone 3 | | 3 | XDD4X | U1L2X | 40.17 | 195.75 | 36.35 | 18.40 | 6.86 | | | | | | |
| | Commingled DS1 COCI | | | XDH1X, NTCD1 | UC1D1 | 7.50 | 27.30 | 2.90 | 16.85 | 1.04 | | | | | | |
| | Commingled DS1 Interoffice Channel | | | XDH1X | U1TF1 | 34.93 | 87.67 | 45.69 | 43.76 | 27.95 | | | | | | |
| | Commingled DS1 Interoffice Channel Mileage | | | XDH1X | 1L5XX | 0.1199 | | | | | | | | | | |
| | Commingled DS1/DS0 Channel System | | | XDH1X | MQ1 | 71.23 | 86.01 | 0.00 | 0.00 | 0.00 | | | | | | |
| | Commingled DS1 Local Loop Zone 1 | | 1 | XDH1X | USLXX | 49.41 | 209.25 | 70.37 | 37.87 | 6.86 | | | | | | |
| | Commingled DS1 Local Loop Zone 2 | | 2 | XDH1X | USLXX | 52.55 | 209.25 | 70.37 | 37.87 | 6.86 | | | | | | |
| | Commingled DS1 Local Loop Zone 3 | | 3 | XDH1X | USLXX | 68.40 | 209.25 | 70.37 | 37.87 | 6.86 | | | | | | |
| | Commingled DS3 Local Loop | | | HFQC6 | UE3PX | 258.44 | 1,751.51 | 131.77 | 112.80 | 75.81 | | | | | | |
| | Commingled DS3/STS-1 Local Loop Mileage | | | HFQC6, HFRST | 1L5ND | 11.40 | | | | | | | | | | |
| | Commingled STS-1 Local Loop | | | HFRST | UDLS1 | 311.51 | 1,751.51 | 131.77 | 112.80 | 75.81 | | | | | | |
| | Commingled DS3/DS1 Channel System | | | HFQC6 | MQ3 | 124.39 | 0.00 | 0.00 | 0.00 | 0.00 | | | | | | |
| | Commingled DS3 Interoffice Channel | | | HFQC6 | U1TF3 | 349.42 | 325.59 | 76.99 | 49.51 | 32.85 | | | | | | |
| | Commingled DS3 Interoffice Channel Mileage | | | HFQC6 | 1L5XX | 2.63 | | | | | | | | | | |
| | Commingled STS-1Interoffice Channel | | | HFRST | U1TFS | 366.43 | 325.59 | 76.99 | 49.51 | 32.85 | | | | | | |
| | Commingled STS-1Interoffice Channel Mileage | | | HFRST | 1L5XX | 2.63 | | | | | | | | | | |
| | Commingled Dark Fiber - Interoffice Transport, Per Four Fiber Strands, Per Route Mile Or Fraction Thereof | | | HEQDL | 1L5DF | 24.17 | | | | | | | | | | |
| | Commingled Dark Fiber - Interoffice Transport, Per Four Fiber Strands, Per Route Mile Or Fraction Thereof | | | HEQDL | UDF14 | | 1,774.79 | 89.66 | 73.57 | 18.69 | | | | | | |
| **SIGNALING (CCS7)** | | | | | | | | | | | | | | | | |
| | **NOTE:"bk" beside a rate indicates that the parties have agreed to bill and keep for that element pursuant to the terms and conditions in Attachment 3.** | | | | | | | | | | | | | | | |
| | CCS7 Signaling Usage, Per TCAP Message | | | | | 0.0000536 | | | | | | | | | | |
| | CCS7 Signaling Usage, Per ISUP Message (same as E.3.3) | | | | | .0000134bk | | | | | | | | | | |
| **LNP Query Service** | | | | | | | | | | | | | | | | |
| | LNP Charge Per query | | | | | 0.0008227 | | | | | | | | | | |
| | LNP Service Establishment Manual | | | | | | 12.47 | | 11.07 | | | | | | | |
| | LNP Service Provisioning with Point Code Establishment | | | | | | 574.30 | 293.39 | 251.23 | 184.73 | | | | | | |
| | *** NOTE: Switch-as-is rates are only applicable if agreement is TRO/TRRO Compliant** | | | | | | | | | | | | | | | |

| LOCAL INTERCONNECTION - Georgia | | | | | | | | | | | | | Attachment: 3 Exh: A | | | |
|---|---|---|---|---|---|---|---|---|---|---|---|---|---|---|---|---|
| CATEGORY | RATE ELEMENTS | Interim | Zone | BCS | USOC | RATES($) | | | | | Svc Order Submitted Elec per LSR | Svc Order Submitted Manually per LSR | Incremental Charge - Manual Svc Order vs. Electronic-1st | Incremental Charge - Manual Svc Order vs. Electronic-Add'l | Incremental Charge - Manual Svc Order vs. Electronic-Disc 1st | Incremental Charge - Manual Svc Order vs. Electronic-Disc Add'l |
| | | | | | | | Nonrecurring | | Nonrecurring Disconnect | | OSS Rates($) | | | | | |
| | | | | | | Rec | First | Add'l | First | Add'l | SOMEC | SOMAN | SOMAN | SOMAN | SOMAN | SOMAN |
| LOCAL INTERCONNECTION (CALL TRANSPORT AND TERMINATION) | | | | | | | | | | | | | | | | |
| | NOTE: "bk" beside a rate indicates that the Parties have agreed to bill and keep for that element pursuant to the terms and conditions in Attachment 3. | | | | | | | | | | | | | | | |
| | INTERCARRIER COMPENSATION FOR ISP-BOUND TRAFFIC AND LOCAL TRAFFIC | | | | | | | | | | | | | | | |
| | Single Rate for ISP-Bound Traffic and Local Traffic, per MOU | | | | | 0.0007 | | | | | | | | | | |
| | TANDEM SWITCHING | | | | | | | | | | | | | | | |
| | Tandem Switching Function Per MOU | | | | | 0.0004186bk | | | | | | | | | | |
| | Multiple Tandem Switching, per MOU (applies to intial tandem only) | | | | | 0.0004186 | | | | | | | | | | |
| | Tandem Intermediary Charge, per MOU* | | | | | 0.0015 | | | | | | | | | | |
| | * This charge is applicable only to transit traffic and is applied in addition to applicable switching and/or interconnection charges. | | | | | | | | | | | | | | | |
| | TRUNK CHARGE | | | | | | | | | | | | | | | |
| | Installation Trunk Side Service - per DS0 | | | OHD | TPP6X | | 21.53bk | 8.11bk | | | | | | | | |
| | Installation Trunk Side Service - per DS0 | | | OHD | TPP9X | | 21.53bk | 8.11bk | | | | | | | | |
| | Dedicated End Office Trunk Port Service-per DS0** | | | OHD | TDEOP | 0.00 | | | | | | | | | | |
| | Dedicated End Office Trunk Port Service-per DS1** | | | OH1 OH1MS | TDE1P | 0.00 | | | | | | | | | | |
| | Dedicated Tandem Trunk Port Service-per DS0** | | | OHD | TDWOP | 0.00 | | | | | | | | | | |
| | Dedicated Tandem Trunk Port Service-per DS1** | | | OH1 OH1MS | TDW1P | 0.00 | | | | | | | | | | |
| | ** This rate element is recovered on a per MOU basis and is included in the End Office Switching and Tandem Switching, per MOU rate elements | | | | | | | | | | | | | | | |
| | COMMON TRANSPORT (Shared) | | | | | | | | | | | | | | | |
| | Common Transport - Per Mile, Per MOU | | | | | 0.0000028 | | | | | | | | | | |
| | Common Transport - Facilities Termination Per MOU | | | | | 0.0001955 | | | | | | | | | | |
| LOCAL INTERCONNECTION (DEDICATED TRANSPORT) | | | | | | | | | | | | | | | | |
| | INTEROFFICE CHANNEL - DEDICATED TRANSPORT | | | | | | | | | | | | | | | |
| | Interoffice Channel - Dedicated Transport - 2-Wire Voice Grade - Per Mile per month | | | OHM | 1L5NF | 0.0059bk | | | | | | | | | | |
| | Interoffice Channel - Dedicated Transport- 2- Wire Voice Grade - Facility Termination per month | | | OHM | 1L5NF | 13.15bk | 48.41bk | 19.46bk | 16.56bk | 4.99bk | | | | | | |
| | Interoffice Channel - Dedicated Transport - 56 kbps - per mile per month | | | OHM | 1L5NK | 0.0059bk | | | | | | | | | | |
| | Interoffice Channel - Dedicated Transport - 56 kbps - Facility Termination per month | | | OHM | 1L5NK | 8.00bk | 48.41bk | 19.46bk | 16.56bk | 4.99bk | | | | | | |
| | Interoffice Channel - Dedicated Transport - 64 kbps - per mile per month | | | OHM | 1L5NK | 0.0059bk | | | | | | | | | | |
| | Interoffice Channel - Dedicated Transport - 64 kbps - Facility Termination per month | | | OHM | 1L5NK | 8.00bk | 48.41bk | 19.46bk | 16.56bk | 4.99bk | | | | | | |
| | Interoffice Channel - Dedicated Channel - DS1 - Per Mile per month | | | OH1, OH1MS | 1L5NL | 0.1199bk | | | | | | | | | | |
| | Interoffice Channel - Dedicated Tranport - DS1 - Facility Termination per month | | | OH1, OH1MS | 1L5NL | 34.93bk | 110.92bk | 80.20bk | 31.33bk | 21.71bk | | | | | | |
| | Interoffice Channel - Dedicated Transport - DS3 - Per Mile per month | | | OH3, OH3MS | 1L5NM | 2.63bk | | | | | | | | | | |
| | Interoffice Channel - Dedicated Transport - DS3 - Facility Termination per month | | | OH3, OH3MS | 1L5NM | 349.42bk | 320.16bk | 86.24bk | 66.71bk | 52.76bk | | | | | | |
| | LOCAL CHANNEL - DEDICATED TRANSPORT | | | | | | | | | | | | | | | |
| | Local Channel - Dedicated - 2-Wire Voice Grade per month | | | OHM | TEFV2 | 7.91bk | 120.95bk | 53.24bk | 46.35bk | 13.35bk | | | | | | |
| | Local Channel - Dedicated - 4-Wire Voice Grade per month | | | OHM | TEFV4 | 8.90bk | 125.5bk | 54.38bk | 46.35bk | 13.35bk | | | | | | |
| | Local Channel - Dedicated - DS1 per month | | | OH1 | TEFHG | 22.82bk | 149.31bk | 111.09bk | 40.32bk | 26.09bk | | | | | | |
| | Local Channel - Dedicated - DS3 Facility Termination per month | | | OH3 | TEFHJ | 150.05bk | 444.58bk | 145.04bk | 112.80bk | 75.81bk | | | | | | |
| | LOCAL INTERCONNECTION MID-SPAN MEET | | | | | | | | | | | | | | | |
| | Local Channel - Dedicated - DS1 per month | | | OH1MS | TEFHG | 0.00 | 0.00 | | | | | | | | | |
| | Local Channel - Dedicated - DS3 per month | | | OH3MS | TEFHJ | 0.00 | 0.00 | | | | | | | | | |
| | MULTIPLEXERS | | | | | | | | | | | | | | | |
| | Channelization - DS1 to DS0 Channel System | | | OH1, OH1MS | SATN1 | 71.23bk | 105.57bk | 41.55bk | 23.73bk | 4.19bk | | | | | | |
| | DS3 to DS1 Channel System per month | | | OH3, OH3MS | SATNS | 124.39bk | 224.26bk | 71.76bk | 39.97bk | 31.04bk | | | | | | |
| | DS3 Interface Unit (DS1 COCI) per month | | | OH1, OH1MS | SATCO | 7.50bk | 15.79bk | 11.38bk | 6.60bk | 6.60bk | | | | | | |
| | Notes: If no rate is identified in the contract, the rates, terms, and conditions for the specific service or function will be as set forth in applicable BellSouth tariff. | | | | | | | | | | | | | | | |
| SIGNALING (CCS7) | | | | | | | | | | | | | | | | |
| | NOTE:"bk" beside a rate indicates that the parties have agreed to bill and keep for that element pursuant to the terms and conditions in Attachment 3. | | | | | | | | | | | | | | | |

| LOCAL INTERCONNECTION - Georgia | | | | | | | | | | | | | Attachment: 3 Exh: A | | | |
|---|---|---|---|---|---|---|---|---|---|---|---|---|---|---|---|---|
| CATEGORY | | RATE ELEMENTS | Interim | Zone | BCS | USOC | RATES($) | | | | | Svc Order Submitted Elec per LSR | Svc Order Submitted Manually per LSR | Incremental Charge - Manual Svc Order vs. Electronic-1st | Incremental Charge - Manual Svc Order vs. Electronic-Add'l | Incremental Charge - Manual Svc Order vs. Electronic-Disc 1st | Incremental Charge - Manual Svc Order vs. Electronic-Disc Add'l |
| | | | | | | | | Nonrecurring | | Nonrecurring Disconnect | | OSS Rates($) | | | | | |
| | | | | | | | Rec | First | Add'l | First | Add'l | SOMEC | SOMAN | SOMAN | SOMAN | SOMAN | SOMAN |
| | | CCS7 Signaling Connection, Per 56Kbps Facility A-Link DS1 | | | UDB | TPP6A | 8.93 | 34.74 | 34.74 | 16.90 | 16.90 | | | | | | |
| | | CCS7 Signaling Connection, Per 56Kbps Facility A-Link DS3 | | | UDB | TPP9A | 8.93 | 34.74 | 34.74 | 16.90 | 16.90 | | | | | | |
| | | CCS7 Signaling Connection, Per 56Kbps Facility B-Link DS1 | | | UDB | TPP6B | 8.93 | 34.74 | 34.74 | 16.90 | 16.90 | | | | | | |
| | | CCS7 Signaling Connection, Per 56Kbps Facility B-Link DS3 | | | UDB | TPP9B | 8.93 | 34.74 | 34.74 | 16.90 | 16.90 | | | | | | |
| | | CCS7 Signaling Termination, Per STP Port | | | UDB | PT8SX | 111.30 | | | | | | | | | | |
| | | CCS7 Signaling Usage, Per Call Setup Message | | | | | .0000134bk | | | | | | | | | | |
| | | | | | | | | | | | | | | | | | |
| | | | | | | | | | | | | | | | | | |
| | | CCS7 Signaling Usage Surrogate, per link | | | UDB | STU56 | 921.93bk | | | | | | | | | | |
| | | CCS7 Signaling Point Code, Establishment or Change, per STP affected | | | UDB | CCAPO | | 28.12 | 28.12 | 33.29 | 33.29 | | | | | | |
| | | CCS7 Signaling Connection, Switched access service, interface groups, transmissiom paths 6 DS1 level path with bit stream signaling | | | UDB | TPP6X | 8.93 | 34.74 | 34.74 | 16.90 | 16.90 | | | | | | |
| | | CCS7 Signaling Connection, Switched access service, interface groups, transmissiom paths 9 DS3 level path with bit stream signaling | | | UDB | TPP9X | 8.93 | 34.74 | 34.74 | 16.90 | 16.90 | | | | | | |

| COLLOCATION - Georgia | | | | | | | | | | | | | | Attachment: 4 Exh B | | | |
|---|---|---|---|---|---|---|---|---|---|---|---|---|---|---|---|---|---|
| CATEGORY | | RATE ELEMENTS | Interim | Zone | BCS | USOC | RATES($) | | | | | Svc Order Submitted Elec per LSR | Svc Order Submitted Manually per LSR | Incremental Charge - Manual Svc Order vs. Electronic-1st | Incremental Charge - Manual Svc Order vs. Electronic-Add'l | Incremental Charge - Manual Svc Order vs. Electronic-Disc 1st | Incremental Charge - Manual Svc Order vs. Electronic-Disc Add'l |
| | | | | | | | | Nonrecurring | | Nonrecurring Disconnect | | OSS Rates($) | | | | | |
| | | | | | | | Rec | First | Add'l | First | Add'l | SOMEC | SOMAN | SOMAN | SOMAN | SOMAN | SOMAN |
| PHYSICAL COLLOCATION | | | | | | | | | | | | | | | | | |
| | Application | | | | | | | | | | | | | | | | |
| | | Physical Collocation - Initial Application Fee | | | CLO | PE1BA | | 1,284.72 | | 0.59 | | | | | | | |
| | | Physical Collocation - Subsequent Application Fee | | | CLO | PE1CA | | 1,084.41 | | 0.59 | | | | | | | |
| | Space Preparation | | | | | | | | | | | | | | | | |
| | | Physical Collocation - Floor Space, per sq feet | | | CLO | PE1PJ | 4.71 | | | | | | | | | | |
| | | Physical Collocation - Space enclosure, welded wire, first 100 square feet | | | CLO | PE1BW | 167.00 | | | | | | | | | | |
| | | Physical Collocation - Space enclosure, welded wire, each additional 50 square feet | | | CLO | PE1CW | 16.38 | | | | | | | | | | |
| | | Physical Collocation - Space Preparation - C.O. Modification per square ft. | | | CLO | PE1SK | 2.10 | | | | | | | | | | |
| | | Physical Collocation - Space Preparation, Common Systems Modifications-Cageless, per square foot | | | CLO | PE1SL | 2.27 | | | | | | | | | | |
| | | Physical Collocation - Space Preparation - Common Systems Modifications-Caged, per cage | | | CLO | PE1SM | 77.24 | | | | | | | | | | |
| | | Physical Collocation - Space Preparation - Firm Order Processing | | | CLO | PE1SJ | | 140.96 | | | | | | | | | |
| | | Physical Collocation - Space Availability Report, per Central Office Requested | | | CLO | PE1SR | | 248.50 | | | | | | | | | |
| | Power | | | | | | | | | | | | | | | | |
| | | Physical Collocation - Power, -48V DC Power - per Fused Amp Requested | | | CLO | PE1PL | 4.84 | | | | | | | | | | |
| | | Physical Collocation - Power, 120V AC Power, Single Phase, per Breaker Amp | | | CLO | PE1FB | 5.16 | | | | | | | | | | |
| | | Physical Collocation - Power, 240V AC Power, Single Phase, per Breaker Amp | | | CLO | PE1FD | 10.34 | | | | | | | | | | |
| | | Physical Collocation - Power, 120V AC Power, Three Phase, per Breaker Amp | | | CLO | PE1FE | 15.50 | | | | | | | | | | |
| | | Physical Collocation - Power, 277V AC Power, Three Phase, per Breaker Amp | | | CLO | PE1FG | 35.79 | | | | | | | | | | |
| | Cross Connects (Cross Connects, Co-Carrier Cross Connects, and Ports) | | | | | | | | | | | | | | | | |
| | | Physical Collocation - 2-wire cross-connect, loop, provisioning | | | UEANL,UEQ, UNCNX, UEA, UCL, UAL, UHL, UDN, UNCVX | PE1P2 | 0.0202 | | | | | | | | | | |
| | | Physical Collocation - 4-wire cross-connect, loop, provisioning | | | UEA, UHL, UNCVX, UNCDX, UCL, UDL | PE1P4 | 0.0403 | | | | | | | | | | |
| | | Physical Collocation -DS1 Cross-Connect for Physical Collocation, provisioning | | | WDS1L, WDS1S, UXTD1, ULDD1, USLEL, UNLD1, U1TD1, UNC1X, UEPSR, UEPSB, UEPSE, UEPSP, USL, UEPEX, UEPDX | PE1P1 | 0.3807 | | | | | | | | | | |
| | | Physical Collocation - DS3 Cross-Connect, provisioning | | | UE3, U1TD3, UXTD3, UXTS1, UNC3X, UNCSX, ULDD3, U1TS1, ULDS1, UNLD3, UEPEX, UEPDX, UEPSR, UEPSB, UEPSE, UEPSP | PE1P3 | 4.15 | | | | | | | | | | |

| COLLOCATION - Georgia | | | | | | | | | | | | | Attachment: 4 Exh B | | | |
|---|---|---|---|---|---|---|---|---|---|---|---|---|---|---|---|---|
| CATEGORY | RATE ELEMENTS | Interim | Zone | BCS | USOC | RATES($) | | | | | Svc Order Submitted Elec per LSR | Svc Order Submitted Manually per LSR | Incremental Charge - Manual Svc Order vs. Electronic-1st | Incremental Charge - Manual Svc Order vs. Electronic-Add'l | Incremental Charge - Manual Svc Order vs. Electronic-Disc 1st | Incremental Charge - Manual Svc Order vs. Electronic-Disc Add'l |
| | | | | | | | Nonrecurring | | Nonrecurring Disconnect | | OSS Rates($) | | | | | |
| | | | | | | Rec | First | Add'l | First | Add'l | SOMEC | SOMAN | SOMAN | SOMAN | SOMAN | SOMAN |
| | Physical Collocation - 2-Fiber Cross-Connect | | | CLO, ULDO3, ULD12, ULD48, U1TO3, U1T12, U1T48, UDLO3, UDL12, UDF | PE1F2 | 1.76 | | | | | | | | | | |
| | Physical Collocation - 4-Fiber Cross-Connect | | | ULDO3, ULD12, ULD48, U1TO3, U1T12, U1T48, UDLO3, UDL12, UDF, UDFCX | PE1F4 | 3.38 | | | | | | | | | | |
| | Physical Collocation 2-Wire Cross Connect, Port | | | UEPSR, UEPSP, UEPSE, UEPSB, UEPSX, UEP2C | PE1R2 | 0.0202 | | | | | | | | | | |
| | Physical Collocation 4-Wire Cross Connect, Port | | | UEPEX, UEPDD | PE1R4 | 0.0403 | | | | | | | | | | |
| **Security** | | | | | | | | | | | | | | | | |
| | Physical Collocation - Security Escort for Basic Time - normally scheduled work, per half hour | | | CLO | PE1BT | | 16.51 | 10.82 | | | | | | | | |
| | Physical Collocation - Security Escort for Overtime - outside of normally scheduled working hours on a scheduled work day, per half hour | | | CLO | PE1OT | | 21.90 | 14.17 | | | | | | | | |
| | Physical Collocation - Security Escort for Premium Time - outside of scheduled work day, per half hour | | | CLO | PE1PT | | 27.29 | 17.53 | | | | | | | | |
| | Physical Collocation - Security Access System - Security System per Central Office, per Sq. Ft. | | | CLO | PE1AY | 0.011 | | | | | | | | | | |
| | Physical Collocation -Security Access System - New Card Activation, per Card Activation (First), per State | | | CLO | PE1A1 | | 21.98 | | | | | | | | | |
| | Physical Collocation-Security Access System-Administrative Change, existing Access Card, per Request, per State, per Card | | | CLO | PE1AA | | 5.37 | | | | | | | | | |
| | Physical Collocation - Security Access System - Replace Lost or Stolen Card, per Card | | | CLO | PE1AR | | 16.99 | | | | | | | | | |
| | Physical Collocation - Security Access - Initial Key, per Key | | | CLO | PE1AK | | 13.19 | | | | | | | | | |
| | Physical Collocation - Security Access - Key, Replace Lost or Stolen Key, per Key | | | CLO | PE1AL | | 13.19 | | | | | | | | | |
| **Cable Records - Note: The rates in the First & Additional columns will actually be billed as "Initial I" and "Subsequent S" respectively** | | | | | | | | | | | | | | | | |
| | Physical Collocation - Cable Records, per request | | | CLO | PE1CR | | I 742.92 | S 477.59 | 125.63 | | | | | | | |
| | Physical Collocation, Cable Records, VG/DS0 Cable, per cable record (maximum 3600 records) | | | CLO | PE1CD | | 317.29 | | 177.60 | | | | | | | |
| | Physical Collocation, Cable Records, VG/DS0 Cable, per each 100 pair | | | CLO | PE1CO | | 4.47 | | 5.29 | | | | | | | |
| | Physical Collocation, Cable Records, DS1, per T1 TIE | | | CLO | PE1C1 | | 2.22 | | 2.62 | | | | | | | |
| | Physical Collocation, Cable Records, DS3, per T3 TIE | | | CLO | PE1C3 | | 7.76 | | 9.18 | | | | | | | |
| | Physical Collocation - Cable Records, Fiber Cable, per cable record (maximum 99 records) | | | CLO | PE1CB | | 83.37 | | 73.49 | | | | | | | |
| | Physical Collocation, Cable Records,CAT5/RJ45 | | | CLO | PE1C5 | | 2.22 | | 2.62 | | | | | | | |
| **Entrance Cable** | | | | | | | | | | | | | | | | |
| | Physical Collocation - Fiber Cable Installation, Pricing, non-recurring charge, per Entrance Cable | | | CLO | PE1BD | | 736.20 | | 21.49 | | | | | | | |
| | Physical Collocation - Fiber Cable Support Structure, per Entrance Cable | | | CLO | PE1PM | 7.37 | | | | | | | | | | |
| | Physical Collocation, Entrance Cable Support Structure, Copper, per each 100 pairs or fraction thereof (CO Manhole to Collocation Space) | | | CLO | PE1EE | 0.2686 | | | | | | | | | | |
| | Physical Collocation, Entrance Cable Installation, Copper, per Cable (CO Manhole to Collocation Space) | | | CLO | PE1EF | | 754.41 | | 21.49 | | | | | | | |
| | Physical Collocation, Entrance Cable Installation, Copper, per each 100 pairs or fraction thereof (CO Manhole to Collocation Space) | | | CLO | PE1EG | | 9.11 | | | | | | | | | |
| **VIRTUAL COLLOCATION** | | | | | | | | | | | | | | | | |

| COLLOCATION - Georgia | | | | | | | | | | | | | | Attachment: 4 Exh B | | | |
|---|---|---|---|---|---|---|---|---|---|---|---|---|---|---|---|---|---|
| CATEGORY | RATE ELEMENTS | Interim | Zone | BCS | USOC | RATES($) | | | | | Svc Order Submitted Elec per LSR | Svc Order Submitted Manually per LSR | Incremental Charge - Manual Svc Order vs. Electronic-1st | Incremental Charge - Manual Svc Order vs. Electronic-Add'l | Incremental Charge - Manual Svc Order vs. Electronic-Disc 1st | Incremental Charge - Manual Svc Order vs. Electronic-Disc Add'l |
| | | | | | | Nonrecurring | | | Nonrecurring Disconnect | | OSS Rates($) | | | | | |
| | | | | | | Rec | First | Add'l | First | Add'l | SOMEC | SOMAN | SOMAN | SOMAN | SOMAN | SOMAN |
| Application | | | | | | | | | | | | | | | | |
| | Virtual Collocation - Application Fee | | | AMTFS | EAF | | 608.92 | | 0.59 | | | | | | | |
| Space Preparation | | | | | | | | | | | | | | | | |
| | Virtual Collocation - Floor Space, per sq. ft. | | | AMTFS | ESPVX | 4.71 | | | | | | | | | | |
| Power | | | | | | | | | | | | | | | | |
| | Virtual Collocation - Power, per fused amp | | | AMTFS | ESPAX | 4.84 | | | | | | | | | | |
| Cross Connects (Cross Connects, Co-Carrier Cross Connects, and Ports) | | | | | | | | | | | | | | | | |
| | Virtual Collocation - 2-wire cross-connect, loop, provisioning | | | UEANL, UEA, UDN, UAL, UHL, UCL, UEQ, UNCVX, UNCDX, UNCNX | UEAC2 | 0.0192 | | | | | | | | | | |
| | Virtual Collocation - 4-wire cross-connect, loop, provisioning | | | UEA, UHL, UCL, UDL, UNCVX, UNCDX | UEAC4 | 0.0385 | | | | | | | | | | |
| | Virtual collocation - Special Access & UNE, cross-connect per DS1 | | | ULR, UXTD1, UNC1X, ULDD1, U1TD1, USLEL, UNLD1, USL, UEPEX, UEPDX | CNC1X | 0.3807 | | | | | | | | | | |
| | Virtual collocation - Special Access & UNE, cross-connect per DS3 | | | USL, UE3, U1TD3, UXTS1, UXTD3, UNC3X, UNCSX, ULDD3, U1TS1, ULDS1, UDLSX, UNLD3 | CND3X | 4.15 | | | | | | | | | | |
| | Virtual Collocation - 2-Fiber Cross Connects | | | UDL12, UDLO3, U1T48, U1T12, U1TO3, ULDO3, ULD12, ULD48, UDF | CNC2F | 1.76 | | | | | | | | | | |
| | Virtual Collocation - 4-Fiber Cross Connects | | | UDL12, UDLO3, U1T48, U1T12, U1TO3, ULDO3, ULD12, ULD48, UDF | CNC4F | 3.53 | | | | | | | | | | |
| | Virtual Collocation 2-Wire Cross Connect, Port | | | UEPSX, UEPSB, UEPSE, UEPSP, UEPSR, UEP2C | VE1R2 | 0.0192 | | | | | | | | | | |
| | Virtual Collocation 4-Wire Cross Connect, Port | | | UEPDD, UEPEX | VE1R4 | 0.0385 | | | | | | | | | | |
| Cable Records - Note: The rates in the First & Additional columns will actually be billed as "Initial I" & "Subsequent S" respectively | | | | | | | | | | | | | | | | |
| | Virtual Collocation Cable Records - per request | | | AMTFS | VE1BA | | 742.92 | 477.59 | 125.63 | | | | | | | |
| | Virtual Collocation Cable Records - VG/DS0 Cable, per cable record | | | AMTFS | VE1BB | | 317.29 | | 177.60 | | | | | | | |
| | Virtual Collocation Cable Records - VG/DS0 Cable, per each 100 pair | | | AMTFS | VE1BC | | 4.47 | | 5.29 | | | | | | | |
| | Virtual Collocation Cable Records - DS1, per T1TIE | | | AMTFS | VE1BD | | 2.22 | | 2.62 | | | | | | | |
| | Virtual Collocation Cable Records - DS3, per T3TIE | | | AMTFS | VE1BE | | 7.76 | | 9.18 | | | | | | | |
| | Virtual Collocation Cable Records - Fiber Cable, per 99 fiber records | | | AMTFS | VE1BF | | 83.37 | | 73.49 | | | | | | | |
| | Virtual Collocation Cable Records - CAT 5/RJ45 | | | AMTFS | VE1B5 | | 2.22 | | 2.62 | | | | | | | |
| Security | | | | | | | | | | | | | | | | |
| | Virtual collocation - Security escort, basic time, normally scheduled work hours | | | AMTFS | SPTBX | | 16.51 | 10.82 | | | | | | | | |
| | Virtual collocation - Security escort, overtime, outside of normally scheduled work hours on a normal working day | | | AMTFS | SPTOX | | 21.90 | 14.17 | | | | | | | | |
| | Virtual collocation - Security escort, premium time, outside of a scheduled work day | | | AMTFS | SPTPX | | 27.29 | 17.53 | | | | | | | | |
| Maintenance | | | | | | | | | | | | | | | | |
| | Virtual collocation - Maintenance in CO - Basic, per half hour | | | AMTFS | CTRLX | | 26.52 | 10.82 | | | | | | | | |

| COLLOCATION - Georgia | | | | | | | | | | | | | | Attachment: 4 Exh B | | | |
|---|---|---|---|---|---|---|---|---|---|---|---|---|---|---|---|---|---|
| CATEGORY | | RATE ELEMENTS | Interim | Zone | BCS | USOC | RATES($) | | | | | Svc Order Submitted Elec per LSR | Svc Order Submitted Manually per LSR | Incremental Charge - Manual Svc Order vs. Electronic-1st | Incremental Charge - Manual Svc Order vs. Electronic-Add'l | Incremental Charge - Manual Svc Order vs. Electronic-Disc 1st | Incremental Charge - Manual Svc Order vs. Electronic-Disc Add'l |
| | | | | | | | | Nonrecurring | | Nonrecurring Disconnect | | OSS Rates($) | | | | | |
| | | | | | | | Rec | First | Add'l | First | Add'l | SOMEC | SOMAN | SOMAN | SOMAN | SOMAN | SOMAN |
| | | Virtual collocation - Maintenance in CO - Overtime, per half hour | | | AMTFS | SPTOM | | 35.41 | 14.17 | | | | | | | | |
| | | Virtual collocation - Maintenance in CO - Premium per half hour | | | AMTFS | SPTPM | | 44.30 | 17.53 | | | | | | | | |
| | **Entrance Cable** | | | | | | | | | | | | | | | | |
| | | Virtual Collocation - Cable Installation Charge, per cable | | | AMTFS | ESPCX | | 736.20 | | 21.49 | | | | | | | |
| | | Virtual Collocation - Cable Support Structure, per cable | | | AMTFS | ESPSX | 7.74 | | | | | | | | | | |
| | | Virtual Collocation, Entrance Cable Support Structure, Copper, per each 100 pairs or fraction thereof (CO Manhole to Frame) | | | AMTFS | VE1EE | 0.235 | | | | | | | | | | |
| | | Virtual Collocation, Entrance Cable Installation, Copper, per Cable (CO Manhole to Frame) | | | AMTFS | VE1EF | | 754.41 | | 21.49 | | | | | | | |
| | | Virtual Collocation, Entrance Cable Installation, Copper, per each 100 pairs or fraction thereof (CO Manhole to Frame) | | | AMTFS | VE1EG | | 9.11 | | | | | | | | | |
| **COLLOCATION IN THE REMOTE SITE** | | | | | | | | | | | | | | | | | |
| | **Physical Remote Site Collocation** | | | | | | | | | | | | | | | | |
| | | Physical Collocation in the Remote Site - Application Fee | | | CLORS | PE1RA | | 300.31 | | 132.49 | | | | | | | |
| | | Cabinet Space in the Remote Site per Bay/ Rack | | | CLORS | PE1RB | 148.11 | | | | | | | | | | |
| | | Physical Collocation in the Remote Site - Security Access - Key | | | CLORS | PE1RD | | 13.19 | | | | | | | | | |
| | | Physical Collocation in the Remote Site - Space Availability Report per Premises Requested | | | CLORS | PE1SR | | 109.83 | | | | | | | | | |
| | | Physical Collocation in the Remote Site - Remote Site CLLI Code Request, per CLLI Code Requested | | | CLORS | PE1RE | | 36.00 | | | | | | | | | |
| | | Remote Site DLEC Data (BRSDD), per Compact Disk, per CO | | | CLORS | PE1RR | | 116.71 | | | | | | | | | |
| | | Physical Collocation - Security Escort for Basic Time - normally scheduled work, per half hour | | | CLORS | PE1BT | | 16.51 | 10.82 | | | | | | | | |
| | | Physical Collocation - Security Escort for Overtime - outside of normally scheduled working hours on a scheduled work day, per half hour | | | CLORS | PE1OT | | 21.90 | 14.17 | | | | | | | | |
| | | Physical Collocation - Security Escort for Premium Time - outside of scheduled work day, per half hour | | | CLORS | PE1PT | | 27.29 | 17.53 | | | | | | | | |
| | **Virtual Remote Site Collocation** | | | | | | | | | | | | | | | | |
| | | Virtual Collocation in the Remote Site - Application Fee | | | VE1RS | VE1RB | | 300.31 | | 132.49 | | | | | | | |
| | | Virtual Collocation in the Remote Site - Per Bay/Rack of Space | | | VE1RS | VE1RC | 148.11 | | | | | | | | | | |
| | | Virtual Collocation in the Remote Site - Space Availability Report per Premises requested | | | VE1RS | VE1RR | | 109.83 | | | | | | | | | |
| | | Virtual Collocation in the Remote Site - Remote Site CLLI Code Request, per CLLI Code Requested | | | VE1RS | VE1RL | | 36.00 | | | | | | | | | |
| **ADJACENT COLLOCATION** | | | | | | | | | | | | | | | | | |
| | | Adjacent Collocation - Space Charge per Sq. Ft. | | | CLOAC | PE1JA | 0.1725 | | | | | | | | | | |
| | | Adjacent Collocation - Electrical Facility Charge per Linear Ft. | | | CLOAC | PE1JC | 4.12 | | | | | | | | | | |
| | | Adjacent Collocation - 2-Wire Cross-Connects | | | UEANL,UEQ,UEA,UCL, UAL, UHL, UDN | PE1JE | 0.0176 | | | | | | | | | | |
| | | Adjacent Collocation - 4-Wire Cross-Connects | | | UEA,UHL,UDL,UCL | PE1JF | 0.0353 | | | | | | | | | | |
| | | Adjacent Collocation - DS1 Cross-Connects | | | USL | PE1JG | 0.3686 | | | | | | | | | | |
| | | Adjacent Collocation - DS3 Cross-Connects | | | UE3 | PE1JH | 4.83 | | | | | | | | | | |
| | | Adjacent Collocation - 2-Fiber Cross-Connect | | | CLOAC | PE1JJ | 1.69 | | | | | | | | | | |
| | | Adjacent Collocation - 4-Fiber Cross-Connect | | | CLOAC | PE1JK | 3.31 | | | | | | | | | | |
| | | Adjacent Collocation - Application Fee | | | CLOAC | PE1JB | | 1,380.83 | | 0.50 | | | | | | | |
| | | Adjacent Collocation - 120V, Single Phase Standby Power Rate per AC Breaker Amp | | | CLOAC | PE1JL | 5.16 | | | | | | | | | | |
| | | Adjacent Collocation - 240V, Single Phase Standby Power Rate per AC Breaker Amp | | | CLOAC | PE1JM | 10.34 | | | | | | | | | | |
| | | Adjacent Collocation - 120V, Three Phase Standby Power Rate per AC Breaker Amp | | | CLOAC | PE1JN | 15.50 | | | | | | | | | | |

| COLLOCATION - Georgia | | | | | | | | | | | | | | Attachment: 4 Exh B | | | |
|---|---|---|---|---|---|---|---|---|---|---|---|---|---|---|---|---|---|
| CATEGORY | | RATE ELEMENTS | Interim | Zone | BCS | USOC | RATES($) | | | | | Svc Order Submitted Elec per LSR | Svc Order Submitted Manually per LSR | Incremental Charge - Manual Svc Order vs. Electronic- 1st | Incremental Charge - Manual Svc Order vs. Electronic- Add'l | Incremental Charge - Manual Svc Order vs. Electronic- Disc 1st | Incremental Charge - Manual Svc Order vs. Electronic- Disc Add'l |
| | | | | | | | | Nonrecurring | | Nonrecurring Disconnect | | OSS Rates($) | | | | | |
| | | | | | | | Rec | First | Add'l | First | Add'l | SOMEC | SOMAN | SOMAN | SOMAN | SOMAN | SOMAN |
| | | Adjacent Collocation - 277V, Three Phase Standby Power Rate per AC Breaker Amp | | | CLOAC | PE1JO | 35.79 | | | | | | | | | | |

**Amendment to the Agreement**
**Between**
**Level 3 Communications, L.L.C.**
**and**
**BellSouth Telecommunications, Inc.**
**Dated June 23, 2004**

Pursuant to this Amendment, (the "Amendment"), Level 3 Communications, L.L.C. (Level 3), and BellSouth Telecommunications, Inc. (BellSouth), hereinafter referred to collectively as the "Parties", hereby agree to amend that certain Interconnection Agreement between the Parties dated June 23, 2004 ("Agreement").

WHEREAS, on March 2, 2006, the Georgia Public Service Commission (Commission) issued its Order in Docket No. 19341-U(Change of Law Order), Proceeding to Consider Amendments to Interconnection Agreements Between BellSouth Telecommunications, Inc. and certified Competitive Local Exchange Carriers (CLECs) Due to Changes of Law; and

WHEREAS, on March 10, 2006, the Commission issued its Order Setting Rates Under Section 271 in Docket No. 19341-U (271 Order); and

WHEREAS, on March 24, 2006, Commission issued its Order on Reconsideration of the March 10, 2006 Order Setting Rates Under Section 271 in Docket No. 19341-U(271 Reconsideration Order); and

WHEREAS, the Parties are obligated to amend the Agreement to bring it in compliance with the Commission's Change of Law Order, 271 Order and 271 Reconsideration Order (collectively, "Orders"); and

WHEREAS, the Parties enter into this Amendment without prejudice to any position they may take, or have taken, with respect to similar future agreements between the Parties; and

NOW, THEREFORE, in consideration of the mutual provisions contained herein and other good and valuable consideration, the receipt and sufficiency of which are hereby acknowledged, the Parties hereby covenant and agree as follows:

1. The Parties hereby agree to incorporate into the Agreement the contract provisions set forth in Exhibit A hereto, and such contract provisions shall apply to services provided in the State of Georgia only.

2. The Parties hereby agree to incorporate into the Agreement the rates set forth in Exhibit B hereto, and such rates shall apply to services provided in the State of Georgia only.

3. To the extent that such contract provisions or rates as set forth in Exhibits A and B hereto conflict with any other rates, terms and conditions in the Agreement, the contract provisions and rates in Exhibits A and B shall prevail in the State of Georgia.

4. Further, to the extent that defined terms in this Amendment differ from defined terms in the Agreement, such defined terms in the Agreement shall be deemed to have the same meaning as the alternative defined terms in this Amendment to the extent necessary to give full effect to this Amendment consistent with the Georgia Public Service Commission's Orders.

5. This Amendment shall be shall be deemed effective on March 11, 2006 (”Effective Date”).

6. All of the other provisions of the Agreement shall remain in full force and effect.

7. Either or both of the Parties are authorized to submit this Amendment to the Georgia Public Service Commission for approval subject to Section 252(e) of the Federal Telecommunications Act of 1996.

IN WITNESS WHEREOF, the Parties have executed this Amendment the day and year written below.

**BellSouth Telecommunications, Inc.**

By: Kristen E. Shore

Name: Kristen E. Shore

Title: Director

Date: 12/14/06

**Level 3 Communications, L.L.C.**

By:

Name: Andrea L. Gavalas

Title: Vice President

Date: 12/8/06

Version: GA COL Amendment
CLEC with No CA
05/08/06

**Issue 2 – What is the appropriate language to implement the FCC's transition plan for: (1) switching; (2) high-capacity loops; and (3) dedicated transport as detailed in the FCC's TRRO, issued February 4, 2005?**

**1. Local Switching**

1.1. Notwithstanding anything to the contrary in this Agreement, the services offered pursuant to this Section 1 are limited to DS0 level Local Switching and BellSouth is not required to provide Local Switching pursuant to this Agreement except as set forth in Section 1.2 below.

1.1.1 BellSouth shall not be required to unbundle local circuit switching for Level 3 for a particular End User when Level 3: (1) serves an End User with four (4) or more voice-grade (DS0) equivalents or lines served by BellSouth in Zone 1 of the following MSAs: Atlanta, GA; Miami, FL; Orlando, FL; Ft. Lauderdale, FL; Charlotte-Gastonia-Rock Hill, NC; Greensboro-Winston Salem-High Point, NC; Nashville, TN; and New Orleans, LA; or (2) serves an End User with a DS1 or higher capacity Loop in any service area covered by this Agreement. To the extent that Level 3 is serving any End User as described above as of the Effective Date of this Agreement, such End User's arrangement may not remain in place and such Arrangement must be terminated by Level 3 or transitioned by Level 3, or BellSouth shall disconnect such Arrangements upon thirty (30) days written notice.

**1.2 Transition for Local Switching**

1.2.1 For purposes of this Section 1, the Transition Period for the Embedded Base of Local Switching is the twelve (12) month period beginning March 11, 2005 and ending March 10, 2006.

1.2.2 For the purposes of this Section 1, Embedded Base shall mean Local Switching and any additional elements that are required to be provided in conjunction therewith that were in service for Level 3 as of March 10, 2005. Subsequent disconnects or loss of End Users shall be removed from the Embedded Base.

1.2.3 During the Transition Period only, BellSouth shall make Local Switching available for the Embedded Base, in addition to all elements that are required to be provided in conjunction with Local Switching, at the rates, terms and conditions set forth in this Attachment. The Transition Period shall apply only to Level 3's Embedded Base and Level 3 shall not place new orders for Local Switching pursuant to this Agreement.

1.2.4 Transition Period Pricing. From March 11, 2005, through the completion of the Transition Period, BellSouth shall charge a rate for Level 3's

Embedded Base of Local Switching equal to the rates set forth in Exhibit A of Attachment 2 of the Agreement plus one dollar.

1.2.5 Level 3 must submit orders to disconnect or convert all of its Embedded Base of Local Switching to other BellSouth services as Conversions pursuant to Section 17.1 below by March 11, 2006 , or some other mutually agreed upon date. In the case of disconnection, the applicable disconnect charges set forth in this Agreement shall apply.

1.2.6 If Level 3 fails to submit orders to disconnect or convert all of its Embedded Base of Local Switching as specified in Section 1.2.5 above by March 11, 2006 or some other mutually agreed upon date, BellSouth will identify Level 3's remaining Embedded Base of Local Switching and will disconnect such Local Switching upon thirty (30) days' prior written notice. Those circuits identified and disconnected by BellSouth shall be subject to the applicable disconnect charges as set forth in this Agreement.

1.2.7 Effective March 11, 2006, Local Switching will no longer be made available pursuant to this Agreement.

**2. UNE-P**

2.1 DS0 Local Switching, as defined in Section 1 above, in combination with a Loop and Common (Shared) Transport (UNE-P) provides local exchange service for the origination or termination of calls. UNE-P supports the same local calling and feature requirements as described in the Local Switching section of this Attachment and the ability to presubscribe to a primary carrier for intraLATA toll service and/or to presubscribe to a primary carrier for interLATA toll service.

2.2 Notwithstanding anything to the contrary in this Agreement, BellSouth is not required to provide UNE-P pursuant to this Agreement except as set forth in this Section 2.

**2.3 Transition Period for UNE-P**

2.3.1 For purposes of this Section 2, the Transition Period for UNE-P is the twelve (12) month period beginning March 11, 2005 and ending March 10, 2006.

2.3.2 For the purposes of this Section 2, Embedded Base shall mean UNE-P and any additional elements that are required to be provided in conjunction therewith that were in service for Level 3 as of March 11, 2005. Subsequent disconnects or loss of End Users shall be removed from the Embedded Base.

2.3.3 During the Transition Period only, BellSouth shall make UNE-P available for the Embedded Base, in addition to all elements that are required to be provided in conjunction with UNE-P, at the rates, terms and conditions set forth in this Attachment. The Transition Period shall apply only to Level 3's Embedded Base and Level 3 shall not place new orders for UNE-P pursuant to this Agreement.

2.3.4 Transition Period Pricing. From March 11, 2005, through the completion of the Transition Period, BellSouth shall charge a rate for Level 3's Embedded Base of UNE-P equal to the rates set forth in Exhibit A of Attachment 2 of the Agreement plus one dollar.

2.3.5 Level 3 must submit orders, or spreadsheets, or if converting to UNE Loops, must use the Bulk Migration process to either disconnect or convert all of its Embedded Base of UNE-P to other BellSouth services as Conversions pursuant to Section 17.1 below by March11, 2006, or some other mutually agreed upon date.

2.3.6 If Level 3 fails to submit orders or spreadsheets converting all of the Embedded Base of UNE-P as specified in Section 2.3.5 above by March 11, 2006 or some other mutually agreed upon date, BellSouth will identify Level 3's remaining Embedded Base of UNE-P and will transition such UNE-P to resold BellSouth telecommunication services, as set forth in Attachment 1 effective March 11, 2006. Those circuits identified and transitioned by BellSouth shall be subject to the applicable non-recurring line connection charge less the resale discount.

2.3.7 For Embedded Base UNE-P in place after March 11, 2006, the applicable resale charges shall apply as of March 11, 2006.

2.3.8 Effective March 11, 2006, UNE-P will no longer be made available pursuant to this Agreement**.**

**3. Loops**

3.1 4-wire Unbundled DS1 Digital Loop

This is a designed 4-wire Loop that is provisioned according to industry standards for DS1 or Primary Rate ISDN services and will come standard with a test point, OC, and a DLR. A DS1 Loop may be provisioned over a variety of loop transmission technologies including copper, HDSL-based technology or fiber optic transport systems. It will include a 4-wire DS1 Network Interface at the End User's location. For purposes of this Agreement, including the transition of DS1 and DS3 Loops described in Section 3.4 below, DS1 Loops include 2-wire and 4-wire copper Loops capable of providing high-bit digital subscriber line services, such as 2-wire and 4-wire HDSL Compatible Loops.

3.2 2-wire or 4-wire HDSL-Compatible Loop

This is a designed Loop that meets Carrier Serving Area (CSA) specifications, may be up to 12,000 feet long and may have up to 2,500 feet of bridged tap (inclusive of Loop length). It may be a 2-wire or 4-wire circuit and will come standard with a test point, OC, and a DLR.

3.3 DS3 Loop.

DS3 Loop is a two-point digital transmission path which provides for simultaneous two-way transmission of serial, bipolar, return-to-zero isochronous digital electrical signals at a transmission rate of forty-four

point seven thirty-six (44.736) megabits per second (Mbps) that is dedicated to the use of the ordering CLEC in its provisioning of local exchange and associated exchange access services. It may provide transport for twenty-eight (28) DS1 channels, each of which provides the digital equivalent of twenty-four (24) analog voice grade channels. The interface to unbundled dedicated DS3 transport is a metallic-based electrical interface.

**3.4 Transition for DS1 and DS3 Loops**

3.4.1 For purposes of this Section 3, the Transition Period for the Embedded Base of DS1 and DS3 Loops and for the Excess DS1 and DS3 Loops (defined in 3.4.3) is the twelve (12) month period beginning March 11, 2005 and ending March 10, 2006.

3.4.2 For purposes of this Section 3, Embedded Base means DS1 and DS3 Loops that were in service for Level 3 as of March 11, 2005 in those wire centers that, as of such date, met the criteria set forth in Sections 3.4.6.1 or 3.4.6.2 below. Subsequent disconnects or loss of End Users shall be removed from the Embedded Base.

3.4.3 Excess DS1 and DS3 Loops are those Level 3 DS1 and DS3 Loops in service as of March 11, 2005, in excess of the caps set forth in Section 3.4.4 below, respectively. Subsequent disconnects or loss of End Users shall be removed from Excess DS1 and DS3 Loops.

3.4.4 BellSouth shall not provide more than ten (10) unbundled DS1 Loops to Level 3 at any single building in which DS1 Loops are available as unbundled loops. Level 3 may obtain a maximum of a single Unbundled DS3 loop to any single building in which DS3 Loops are available as Unbundled Loops.

3.4.5 For purposes of this Section 3, a Business Line is defined in 47 C.F.R. § 51.5.

3.4.6 Notwithstanding anything to the contrary in this Agreement, and except as set forth in Section 12 below, BellSouth shall make available DS1 and DS3 Loops as described in this Section 3.4 only for Level 3's Embedded Base during the Transition Period:

3.4.6.1 DS1 Loops at any location within the service area of a wire center containing 60,000 or more Business Lines and four (4) or more fiber-based collocators.

3.4.6.2 DS3 Loops at any location within the service area of a wire center containing 38,000 or more Business Lines and four (4) or more fiber-based collocators.

3.4.7 A list of wire centers meeting the criteria set forth in Sections 3.4.6.1 and 3.4.6.2 above as ordered by the Georgia Public Service Commission in Docket No. 19341-U (Initial Wire Center List) is attached to BellSouth's

Carrier Notification Letter SN91086068, dated March 30, 2006, which is available on BellSouth's Interconnection Services Web site.

3.4.8 Transition Period Pricing. From March 11, 2005, through the completion of the Transition Period, BellSouth shall charge a rate for Level 3's Embedded Base and Level 3's Excess DS1 and DS3 Loops equal to 115% of the rates for such DS1 and DS3 Loops set forth in Exhibit A of Attachment 2 of the Agreement.

3.4.9 The Transition Period shall apply only to (1) Level 3's Embedded Base and (2) Level 3's Excess DS1 and DS3 Loops. Level 3 shall not add new DS1 or DS3 loops as described in this Section 3.4 pursuant to this Agreement, except pursuant to the self-certification process as set forth in Section 7 of this Attachment and as set forth in Section 12 below.

3.4.10 Once a wire center meets or exceeds both of the thresholds set forth in Section 3.4.6.1 above, no future DS1 Loop unbundling will be required in that wire center.

3.4.11 Once a wire center meets or exceeds both of the thresholds set forth in Section 3.4.6.2 above, no future DS3 Loop unbundling will be required in that wire center.

3.4.12 No later than March 11, 2006, or some other mutually agreed upon date, Level 3 shall submit spreadsheet(s) identifying all of the Embedded Base of circuits and Excess DS1 and DS3 Loops to be either disconnected or converted to other BellSouth services pursuant to Section 17.1 below. The Parties shall negotiate a project schedule for the Conversion of the Embedded Base and Excess DS1 and DS3 Loops. In the case of Conversion, the applicable switch as is charge will apply. In the case of disconnection, the applicable disconnect charges set forth in this Agreement shall apply.

3.4.13 If Level 3 fails to submit the spreadsheet(s) specified in Section 3.4.12 above for all of its Embedded Base and Excess DS1 and DS3 Loops by March 11, 2006 or some other mutually agreed upon date, BellSouth will identify Level 3's remaining Embedded Base and Excess DS1 and DS3 Loops, if any, and will transition such circuits to the 271 equivalent BellSouth service(s) as set forth in Section 28 below, effective March 11, 2006. Those circuits identified and transitioned by BellSouth pursuant to this Section 3.4.13 shall be subject to 115% of the applicable switch-as-is rates set forth in Exhibit A of Attachment 2 of the Agreement.

3.4.14 For Embedded Base circuits and Excess DS1 and DS3 Loops in place after March 11, 2006, the applicable recurring 271 charge shall apply to each circuit as of March 11, 2006.

**4. <u>Dark Fiber Loop</u>**

4.1 Dark Fiber Loop is an unused optical transmission facility, without attached signal regeneration, multiplexing, aggregation or other electronics, from the demarcation point at an End User's premises to the

End User's serving wire center. Dark Fiber Loops may be strands of optical fiber existing in aerial or underground structure. BellSouth will not provide line terminating elements, regeneration or other electronics necessary for Level 3 to utilize Dark Fiber Loops.

**4.2 Transition for Dark Fiber Loop**

4.2.1 For purposes of this Section 4, the Transition Period for Dark Fiber Loops is the eighteen (18) month period beginning March 11, 2005 and ending September 10, 2006.

4.2.2 For purposes of this Section 4, Embedded Base means Dark Fiber Loops that were in service for Level 3 as of March 11, 2005. Subsequent disconnects or loss of End Users shall be removed from the Embedded Base.

4.2.3 During the Transition Period only, BellSouth shall make available for the Embedded Base Dark Fiber Loops for Level 3 at the terms and conditions set forth in this Attachment.

4.2.4 Transition Period Pricing. From March 11, 2005, through the completion of the Transition Period, BellSouth shall charge a rate for Level 3's Embedded Base of Dark Fiber Loops equal to 115% of the rate for such Dark Fiber Loops set forth in Exhibit A of Attachment 2 of the Agreement.

4.2.5 The Transition Period shall apply only to Level 3's Embedded Base and Level 3 shall not add new Dark Fiber Loops pursuant to this Agreement.

4.2.6 Effective September 11, 2006, Dark Fiber Loops will no longer be made available pursuant to this Agreement.

4.2.7 No later than June 10, 2006 Level 3 shall submit spreadsheet(s) identifying all of the Embedded Base of circuits to be either disconnected or converted to other BellSouth services as Conversions pursuant to Section 17.1 below. The Parties shall negotiate a project schedule for the Conversion of the Embedded Base. In the case of disconnection, the applicable disconnect charges set forth in this Agreement shall apply.

4.2.8 If Level 3 fails to submit the spreadsheet(s) specified in Section 4.2.7 above for all of its Embedded Base prior to June 10, 2006, BellSouth will identify Level 3's remaining Embedded Base, if any, and will transition such circuits to the equivalent tariffed BellSouth service(s) effective September 10, 2006. Those circuits identified and transitioned by BellSouth pursuant to this Section 4.2.8 shall be subject to 115% of the applicable switch-as-is rates set forth in Exhibit A of Attachment 2 of the Agreement.

4.2.9 For Embedded Base circuits in place after September 10, 2006, the applicable tariff charge shall apply to each circuit as of September 10, 2006.

**5. Dedicated Transport and Dark Fiber Transport**

5.1 **Dedicated Transport.** Dedicated Transport is defined as BellSouth's transmission facilities between wire centers or switches owned by BellSouth, or between wire centers or switches owned by BellSouth and switches owned by Level 3, including but not limited to DS1, DS3 and OCn level services, as well as dark fiber, dedicated to Level 3. BellSouth shall not be required to provide access to OCn level Dedicated Transport under any circumstances pursuant to this Agreement. In addition, except as set forth in Section 5.2 below, BellSouth shall not be required to provide to Level 3 unbundled access to interoffice transmission facilities that do not connect a pair of wire centers or switches owned by BellSouth ("Entrance Facilities").

5.2 **Transition for DS1 and DS3 Dedicated Transport Including DS1 and DS3 Entrance Facilities**

5.2.1 For purposes of this Section 5.2, the Transition Period for the Embedded Base of DS1 and DS3 Dedicated Transport, Embedded Base Entrance Facilities and for Excess DS1 and DS3 Dedicated Transport, is the twelve (12) month period beginning March 11, 2005 and ending March 10, 2006.

5.2.2 For purposes of this Section 5.2, Embedded Base means DS1 and DS3 Dedicated Transport that were in service for Level 3 as of March 11, 2005 in those wire centers that, as of such date, met the criteria set forth in Sections 5.2.7.1 or 5.2.7.2 below. Subsequent disconnects or loss of End Users shall be removed from the Embedded Base.

5.2.3 For purposes of this Section 5.2, Embedded Base Entrance Facilities means Entrance Facilities that were in service for Level 3 as of March 11, 2005. Subsequent disconnects or loss of customers shall be removed from the Embedded Base.

5.2.4 Level 3 may obtain a maximum of twelve (12) unbundled DS3 Dedicated Transport circuits on each route where DS3 Dedicated Transport is available as a Network Element, and a maximum of ten (10) unbundled DS1 Dedicated Transport circuits on each Route where there is no 251(c)(3) unbundling obligation for DS3 Dedicated Transport but for which impairment exists for DS1 Dedicated Transport.

5.2.5 For purposes of this Section 5.2, Excess DS1 and DS3 Dedicated Transport means those Level 3 DS1 and DS3 Dedicated Transport facilities in service as of March 11, 2005, in excess of the caps set forth in Section 5.2.4 above. Subsequent disconnects and loss of End Users shall be removed from Excess DS1 and DS3 Loops.

5.2.6 For purposes of this Section 5.2, a Business Line is as defined in 47 C.F.R. § 51.5.

5.2.7 Notwithstanding anything to the contrary in this Agreement, BellSouth shall make available Dedicated Transport as described in this Section 5.2 only for Level 3's Embedded Base during the Transition Period:

5.2.7.1 DS1 Dedicated Transport where both wire centers at the end points of the route contain 38,000 or more Business Lines or four (4) or more fiber-based collocators.

5.2.7.2 DS3 Dedicated Transport where both wire centers at the end points of the route contain 24,000 or more Business Lines or three (3) or more fiber-based collocators.

5.2.7.3 A list of wire centers meeting the criteria set forth in Sections 5.2.7.1 or 5.2.7.2 above as ordered by the Georgia Public Service Commission in Docket No. 19341-U(Initial Wire Center List), is attached to BellSouth's Carrier Notification Letter SN91086068, dated March 30, 2006, which is available on BellSouth's Interconnection Services Web site.

5.2.8 Notwithstanding anything to the contrary in this Agreement, BellSouth shall make available Entrance Facilities only for <Level 3's Embedded Base Entrance Facilities and only during the Transition Period.

5.2.9 Transition Period Pricing. From March 11, 2005, through the completion of the Transition Period, BellSouth shall charge a rate for Level 3's Embedded Base of DS1 and DS3 Dedicated Transport and for Level 3's Excess DS1 and DS3 Dedicated Transport, as described in this Section 5.2, equal to 115% of the rates for such DS1 and DS3 Dedicated Transport set forth in Exhibit A of Attachment 2 of the Agreement.

5.2.9.4 From March 11, 2005, through the completion of the Transition Period, BellSouth shall charge a rate for Level 3's Embedded Base Entrance Facilities as set forth in Exhibit A of Attachment 2 of the Agreement.

5.2.10 The Transition Period shall apply only to (1) Level 3's Embedded Base and Embedded Base Entrance Facilities; and (2) Level 3's Excess DS1 and DS3 Dedicated Transport. Level 3 shall not add new Entrance Facilities pursuant to this Agreement. Further, Level 3 shall not add new DS1 or DS3 Dedicated Transport as described in this Section 5.2 pursuant to this Agreement, except pursuant to the self-certification process as set forth in Section 7 below of and as set forth in Section 13 below.

5.2.11 Once a wire center meets or exceeds either of the thresholds set forth in this Section 5.2.7.1 above, no future DS1 Dedicated Transport unbundling will be required in that wire center.

5.2.12 Once a wire center meets or exceeds either of the thresholds set forth in Section 5.2.7.2 above, no future DS3 Dedicated Transport will be required in that wire center.

5.2.13 No later than March 11, 2006 or some other mutually agreed upon date Level 3 shall submit spreadsheet(s) identifying all of the Embedded Base of circuits, Embedded Base Entrance Facilities, and Excess DS1 and DS3 Dedicated Transport to be either disconnected or converted to other BellSouth services pursuant to Section 17.1 below. The Parties shall negotiate a project schedule for the Conversion of the Embedded Base,

Embedded Base Entrance Facilities and Excess DS1 and DS3 Dedicated Transport. In the case of disconnection, the applicable disconnect charges set forth in this Agreement shall apply.

5.2.14 If Level 3 fails to submit the spreadsheet(s) specified in Section 5.2.13 above for all of its Embedded Base, and Excess DS1 and DS3 Dedicated Transport by March 11, 2006 or some other mutually agreed upon date, BellSouth will identify Level 3's remaining Embedded Base and Excess DS1 and DS3 Dedicated Transport, if any, and will transition such circuits to BellSouth's 271 equivalent service as set forth in Section 28 below effective March 11, 2006. Those circuits identified and transitioned by BellSouth pursuant to this Section 5.2.14 shall be subject to 115% of the applicable switch-as-is rates set forth in Exhibit A of Attachment 2 of the Agreement.

5.2.15 For Embedded Base and Excess DS1 and DS3 Dedicated Transport in place after March 11, 2006, the applicable 271 rate as set forth in Exhibit B shall apply as of March 11, 2006.

5.2.16 If Level 3 fails to submit the spreadsheet(s) specified in Section 5.2.13 above for all of its Embedded Base Entrance Facilities by March 11, 2006 or some other mutually agreed upon date, BellSouth will identify Level 3's remaining Embedded Base Entrance Facilities, if any, and will transition such circuits to the equivalent tariffed BellSouth service(s) effective March 11, 2006. Those circuits identified and transitioned by BellSouth pursuant to this Section 5.2.16 shall be subject to 115% of the switch-as-is rate set forth in Exhibit A of Attachment 2 of the Agreement.

5.2.17 For Embedded Base Entrance Facilities in place after March 11, 2006, the applicable recurring tariff charges shall apply as of March 11, 2006.

**6.** **Dark Fiber Transport.** Dark Fiber Transport is defined as Dedicated Transport that consists of unactivated optical interoffice transmission facilities without attached signal regeneration, multiplexing, aggregation or other electronics. Except as set forth in Section 6.1 below, BellSouth shall not be required to provide access to Dark Fiber Transport Entrance Facilities pursuant to this Agreement.

**6.1** **Transition for Dark Fiber Transport and Dark Fiber Transport Entrance Facilities**

6.1.1 For purposes of this Section 6, the Transition Period for the Embedded Base of Dark Fiber Transport is the eighteen (18) month period beginning March 11, 2005 and ending September 10, 2006.

6.1.2 For purposes of this Section 6, Embedded Base means Dark Fiber Transport that was in service for Level 3 as of March 11, 2005 in those wire centers that, as of such date, met the criteria set forth in 6.1.4.1. Subsequent disconnects or loss of End Users shall be removed from the Embedded Base.

6.1.3 For purposes of this Section 6.1, a Business Line is as defined in 47 C.F.R. § 51.5.

6.1.4 Notwithstanding anything to the contrary in this Agreement, BellSouth shall make available Dark Fiber Transport as described in this Section 6.1 only for Level 3's Embedded Base during the Transition Period:

6.1.4.1 Dark Fiber Transport where both wire centers at the end points of the route contain twenty-four thousand (24,000) or more Business Lines or three (3) or more fiber-based collocators.

6.1.5 A list of wire centers meeting the criteria set forth in Section 6.1.4 above as ordered by the Georgia Public Service Commission in Docket No. 19341-U, ("Initial List") is attached to BellSouth's Carrier Notification Letter SN91086068, dated March 30, 2006, which is available on BellSouth's Interconnection Services Web site.

6.1.6 Transition Period Pricing. From March 11, 2005, through the completion of the Transition Period, BellSouth shall charge a rate for Level 3's Embedded Base and Excess of Dark Fiber Transport and Embedded Base Dark Fiber Transport Entrance Facilities shall be equal to 115% of the rate for such Dark Fiber Transport set forth in Exhibit A of Attachment 2 of the Agreement.

6.1.7 The Transition Period shall apply only to Level 3's Embedded Base of Dark Fiber Transport and Dark Fiber Entrance Facilities. Level 3 shall not add new Dark Fiber Transport as described in this Section 6.1 except pursuant to the self-certification process as set forth in Section 7 of this Attachment and as set forth in Section 14 below. Further, Level 3 shall not add new Dark Fiber Entrance Facilities pursuant to this Agreement.

6.1.8 Once a wire center exceeds either of the thresholds set forth in Section 6.1.4 above, no future Dark Fiber Transport unbundling will be required in that wire center.

6.1.9 No later than June 10, 2006 Level 3 shall submit spreadsheet(s) identifying all of the Embedded Base of Dark Fiber Transport and Dark Fiber Entrance Facilities to be either disconnected or converted to other BellSouth services as Conversions pursuant to Section 17.1 below. The Parties shall negotiate a project schedule for the Conversion of the Embedded Base. In the case of disconnection, the applicable disconnect charges set forth in this Agreement shall apply.

6.1.10 If Level 3 fails to submit the spreadsheet(s) specified in Section 6.1.9 above for all of its Embedded Base prior to June 10, 2006, BellSouth will identify Level 3's remaining Embedded Base, if any, and will transition such circuits to the equivalent tariffed BellSouth service(s) effective September 10, 2006. Those circuits identified and transitioned by BellSouth pursuant to this Section 6.1.10 shall be subject to 115% of the applicable switch-as-is rates set forth in Exhibit A of Attachment 2 of the Agreement.

6.1.11 For Embedded Base circuits in place as of September 11, 2006, the applicable recurring tariff charge shall apply to each circuit as of September 11, 2006.

**Issue 4 –What is the appropriate language to implement BellSouth's obligation to provide Section 251 unbundled access to high-capacity loops and dedicated transport and how should the following terms be defined? (i) Business Line; (ii) Fiber-Based Collocator; (iii) Building (iv) Route; (v) Is a CLEC entitled to obtain DS3 transport from a Tier 3 wire center to each of two or more Tier 1 or Tier 2 wire centers? (vi) Is a CLEC entitled to obtain dark fiber transport from a Tier 3 wire center to each of two or more Tier 1 or Tier 2 wire centers?**

7. Prior to submitting an order pursuant to this Agreement for high capacity (DS1 or above) Dedicated Transport or high capacity Loops, Level 3 shall undertake a reasonably diligent inquiry to determine whether Level 3 is entitled to unbundled access to such Network Elements in accordance with the terms of this Agreement. By submitting any such order, Level 3 self-certifies that to the best of Level 3's knowledge, the high capacity Dedicated Transport or high capacity Loop requested is available as a Network Element pursuant to this Attachment. Upon receiving such order, BellSouth shall process the request in reliance upon Level 3's self-certification. To the extent BellSouth believes that such request does not comply with the terms of this Attachment, BellSouth shall seek dispute resolution in accordance with the General Terms and Conditions of this Agreement. If BellSouth prevails in such dispute resolution proceeding, Level 3 shall be liable to BellSouth for the difference between the rate for the equivalent BellSouth alternative arrangement and the self certified UNE, plus interest, on such rate differential.

7.1 In the event that (1) BellSouth designates a wire center as non-impaired, (2) Level 3 converts existing UNEs to other services or orders new services as services other than UNEs, (3) Level 3 otherwise would have been entitled to UNEs in such wire center at the time alternative services provisioned, and (4) BellSouth acknowledges or a state or federal agency regulatory body with authority determines that, at the time BellSouth designated such wire center as non-impaired, such wire center did not meet the FCC's non-impairment criteria, then upon request of Level 3, BellSouth shall transition to UNEs any alternative services in such wire center that were established after such wire center was designated as non-impaired. In such instances, BellSouth shall refund Level 3 the difference between the rate paid by Level 3 for such services and the applicable UNE rate, including but not limited to any charges associated with the unnecessary conversion from UNE to other wholesale services.

8. A Business Line is defined in 47 CFR § 51.5.

9. A Fiber-Based Collocator is defined in 47 CFR § 51.5.

10. A Building is defined as a permanent physical structure including, but not limited to, a structure in which people reside, or conduct business or work on a daily basis and through which there is one centralized point of entry in the structure through which all telecommunications services must transit. As an example only, a high rise office building with a general telecommunications equipment room through which all telecommunications services to that building's tenants must pass would be a single "building" for purposes of this Attachment 2. Two or more physical areas served by individual points of entry through which telecommunications services must transit will be considered separate buildings. For instance, a strip mall with individual businesses obtaining telecommunications services from different access points on the building(s) will be considered individual buildings, even though they might share common walls.

11. A route is defined as a transmission path between one of BellSouth's wire centers or switches and another of BellSouth's wire centers or switches. A route between two (2) points may pass through one or more intermediate wire centers or switches. Transmission paths between identical end points are the same "route", irrespective of whether they pass through the same intermediate wire centers or switches, if any.

**Issue 5 – a) Does the Commission have the authority to determine whether or not BellSouth's application of the FCC's Section 251 non-impairment criteria for high-capacity loops and transport is appropriate?**
**b) What procedures should be used to identify those wire centers that satisfy the FCC's Section 251 non-impairment criteria for high-capacity loops and transport?**
**c) What language should be included in agreements to reflect the procedures identified in (b)?**

**12. Modifications and Updates to the Wire Center List and Subsequent Transition Periods for DS1 and/or DS3 Loops**

12.1 In the event BellSouth identifies additional wire centers that meet the criteria set forth in Section 3.4.6 above, but that were not included in the Initial Wire Center List, BellSouth shall provide notice of such additional wire centers in a Carrier Notification Letter (CNL) sent to the point of contact in this Agreement, or in the absence of such point of contact, BellSouth shall post the CNL on BellSouth's Web site. Each such list of additional wire centers shall be considered a "Subsequent Wire Center List."

12.2 Effective ten (10) business days after the date of BellSouth's notice providing a Subsequent Wire Center List, BellSouth shall not be required to unbundle DS1 and/or DS3 Loops, as applicable, in such additional wire center(s), except pursuant to the self-certification process as set forth in Section 7 above.

12.3 For purposes of this Section 12, BellSouth shall make available DS1 and DS3 Loops that were in service for Level 3 in a wire center on the

Subsequent Wire Center List as of the tenth ($10^{th}$) business day after the date of BellSouth's CNL identifying the Subsequent Wire Center List (Subsequent Embedded Base) until one hundred and ten (110) days after the tenth ($10^{th}$) business day from the date of BellSouth's CNL identifying the Subsequent Wire Center List (Subsequent Transition Period).

12.4 Subsequent disconnects or loss of End Users shall be removed from the Subsequent Embedded Base.

12.5 The applicable rate for the Subsequent Embedded Base during the Subsequent Transition Period shall be 115% of the rate for such Loops set forth in Exhibit A of Attachment 2 of the Agreement.

12.6 No later than forty (40) days from BellSouth's CNL identifying the Subsequent Wire Center List, Level 3 shall submit a spreadsheet(s) identifying the Subsequent Embedded Base of circuits to be disconnected or converted to other BellSouth services. In the case of disconnection, the applicable disconnect charges set forth in this Agreement shall apply.

12.7 If Level 3 fails to submit the spreadsheet(s) specified in Section 12.6 above for all of its Subsequent Embedded Base within forty (40) days after the date of BellSouth's CNL identifying the Subsequent Wire Center List BellSouth will identify Level 3's remaining Subsequent Embedded Base, if any, and will transition such circuits to BellSouth's 271 equivalent service set forth in Section 28 below. Those circuits identified and transitioned by BellSouth pursuant to this Section 12.7 shall be subject to 115% of the applicable switch-as-is rates set forth in Exhibit A of Attachment 2 of the Agreement.

12.8 The applicable recurring 271 rate set forth in Exhibit B shall apply to the Subsequent Embedded Base as of the $110^{th}$ day after the tenth business day from the date of BellSouth's CNL identifying the Subsequent Embedded Base.

**13. <u>Modifications and Updates to the Wire Center List and Subsequent Transition Periods for DS1 and/or DS3 Transport</u>**

13.1 In the event BellSouth identifies additional wire centers that meet the criteria set forth in Sections 5.2.11 or 5.2.12 above, but that were not included in the Initial Wire Center List, BellSouth shall provide notice of such additional wire centers in a Carrier Notification Letter (CNL) sent to the point of contact in this Agreement, or in the absence of such point of contact, BellSouth shall post the CNL on BellSouth's Web site. Each such list of additional wire centers shall be considered a "Subsequent Wire Center List."

13.2 Effective ten (10) business days after the date of BellSouth's notice providing a Subsequent Wire Center List, BellSouth shall not be required to provide DS1 and DS3 Dedicated Transport, as applicable, in such

additional wire center(s), except pursuant to the self-certification process as set forth in Section 7 above.

13.3 For purposes of this Section 13, BellSouth shall make available DS1 and DS3 Dedicated Transport that were in service for Level 3 in a wire center on the Subsequent Wire Center List as of the tenth ($10^{th}$) business day after the date of BellSouth's CNL identifying the Subsequent Wire Center List (Subsequent Embedded Base) until one hundred and ten (110) days after the tenth ($10^{th}$) business day from the date of BellSouth's CNL identifying the Subsequent Wire Center List (Subsequent Transition Period).

13.4 Subsequent disconnects or loss of End Users shall be removed from the Subsequent Embedded Base.

13.5 The applicable rate for the Subsequent Embedded Base during the Subsequent Transition Period shall be 115% of the rate for such DS1 and DS3 Dedicated Transport set forth in Exhibit A of Attachment 2 of the Agreement.

13.6 No later than forty (40) days from BellSouth's CNL identifying the Subsequent Wire Center List Level 3 shall submit a spreadsheet(s) identifying the Subsequent Embedded Base of circuits to be disconnected or converted to other BellSouth services. In the case of disconnection, the applicable disconnect charges set forth in this Agreement shall apply.

13.7 If Level 3 fails to submit the spreadsheet(s) specified in Section 13.6 above for all of its Subsequent Embedded Base within forty (40) days after the date of BellSouth's CNL identifying the Subsequent Wire Center List, BellSouth will identify Level 3's remaining Subsequent Embedded Base, if any, and will transition such circuits to BellSouth's 271 equivalent service as set forth in Section 28 below. Those circuits identified and transitioned by BellSouth pursuant to this Section 13.7 shall be subject to 115% of the applicable switch-as-is rates set forth in Exhibit A of Attachment 2 of the Agreement.

13.8 The applicable 271 rate set forth in the tariff shall apply to the Subsequent Embedded Base as of the $110^{th}$ day after the $10^{th}$ business day from the date of BellSouth's CNL identifying the Subsequent Embedded Base.

14. **Modifications and Updates to the Wire Center List and Subsequent Transition Periods for Dark Fiber Transport**

14.1 In the event BellSouth identifies additional wire centers that meet the criteria set forth in Section 6 above, but that were not included in the Initial Wire Center List, BellSouth shall provide notice of such additional wire centers in a Carrier Notification Letter (CNL) sent to the point of contact in this Agreement, or in the absence of such point of contact, BellSouth shall post the CNL on BellSouth's Web site. Each such list of additional wire centers shall be considered a "Subsequent Wire Center List."

14.2 Effective ten (10) business days after the date of BellSouth's notice providing a Subsequent Wire Center List, BellSouth shall not be required to provide unbundled access to Dark Fiber Transport, as applicable, in such additional wire center(s), except pursuant to the self-certification process as set forth in Section 7 above.

14.3 For purposes of this Section 14, BellSouth shall make available Dark Fiber Transport that was in service for Level 3 in a wire center on the Subsequent Wire Center List as of the tenth ($10^{th}$) business day after the date of BellSouth's CNL identifying the Subsequent Wire Center List (Subsequent Embedded Base) until one hundred and ten (110) days after the tenth ($10^{th}$) business day from the date of BellSouth's CNL identifying the Subsequent Wire Center List (Subsequent Transition Period).

14.4 Subsequent disconnects or loss of End Users shall be removed from the Subsequent Embedded Base.

14.5 The applicable rate for the Subsequent Embedded Base during the Subsequent Transition Period shall be 115% of the rate for such Dark Fiber Transport set forth in Exhibit A of Attachment 2 of the Agreement.

14.6 No later than forty (40) days from BellSouth's CNL identifying the Subsequent Wire Center List, Level 3 shall submit a spreadsheet(s) identifying the Subsequent Embedded Base of circuits to be disconnected or converted to other BellSouth services. In the case of disconnection, the applicable disconnect charges set forth in this Agreement shall apply.

14.7 If Level 3 fails to submit the spreadsheet(s) specified in Section 14.6 above for all of its Subsequent Embedded Base within forty (40) days after the date of BellSouth's CNL identifying the Subsequent Wire Center List, BellSouth will identify Level 3's remaining Subsequent Embedded Base, if any, and will transition such circuits to BellSouth's equivalent tariffed service set forth in Section 28 below. Those circuits identified and transitioned by BellSouth pursuant to this Section 14.7 shall be subject to 115% of the applicable switch-as-is rates set forth in Exhibit A of Attachment 2 of the Agreement.

14.8 The applicable tariff rate shall apply to the Subsequent Embedded Base as of the $110^{th}$ day after the $10^{th}$ business day from the date of BellSouth's CNL identifying the Subsequent Embedded Base.

**Issue 10 – Transition of Delisted Network Elements to Which No Specified Transition Period Applies - What rates terms and conditions should govern the transition of existing network elements that BellSouth is no longer obligated to provide as Section 251 UNEs to non-Section 251 network elements and other services and (a) what is the proper treatment for such network elements at the end of the transition period,; and (b) what is the appropriate transition period, and what are the appropriate rates, terms and conditions during such transition period, for unbundled high-capacity loops, high capacity transport, and dark fiber transport in**

**and between wire that do not meet the FCC's non-impairment standards at this time, but that meet such standards in the future?**

15. Except to the extent expressly provided otherwise in this Attachment, Level 3 may not maintain unbundled network elements or combinations of unbundled network elements, that are no longer offered pursuant to Section 251of the Act (collectively "Arrangements"). In the event Level 3 has in place any such Arrangements after the Effective Date of this Agreement, this amendment shall serve as BellSouth's written notice to Level 3 that Level 3 has thirty (30) days to transition all DS1 Local Switching and UNE-P arrangements and sixty (60) days to transition all other Arrangements. If Level 3 fails to submit orders to disconnect or convert such Arrangements within the aforementioned timeframes, BellSouth will transition such circuits to the equivalent tariffed BellSouth service(s). To the extent no tariff equivalent service exists, BellSouth shall disconnect such facility or arrangement. Those circuits identified and transitioned by BellSouth pursuant to this Section 15 shall be subject to 115% of the applicable switch-as-is charges set forth in Exhibit A of Attachment 2 of the Agreement.

15.1 The applicable recurring resale or tariffed charge shall apply to each circuit as of the Effective Date of this Agreement.

**Issue 14 – What is the scope of commingling allowed under the FCC's rules and orders and what language should be included in Interconnection Agreements to implement commingling (including rates)?**

16. **Commingling of Services**

16.1 Commingling means the connecting, attaching, or otherwise linking of a Network Element, or a Combination, to one or more Telecommunications Services or facilities that Level 3 has obtained at wholesale from BellSouth, or the combining of a Network Element or Combination with one or more such wholesale Telecommunications Services or facilities, consistent with the Georgia Public Service Commission's Order dated March 2, 2006 in Docket No. 19341-U. To the extent a Section 271 facility or service is obtained at wholesale, BellSouth will commingle such facility or service with Section 251 Network Elements or Combinations. Level 3 must comply with all rates, terms or conditions applicable to such wholesale Telecommunications Services or facilities.

16.2 Subject to the limitations set forth elsewhere in this Attachment, BellSouth shall not deny access to a Network Element or a Combination on the grounds that one or more of the elements: (1) is connected to, attached to, linked to, or combined with such a facility or service obtained from BellSouth; or (2) shares part of BellSouth's network with access services or inputs for mobile wireless services and/or interexchange services.

16.3 Unless otherwise agreed to by the Parties, the Network Element portion of a commingled circuit will be billed at the rates set forth in Exhibit A of Attachment 2 of the Agreement, and the remainder of the circuit or service

will be billed in accordance with either BellSouth's tariffed rates or the 271 rates set forth in Exhibit B of this Agreement, as applicable.

16.4 When multiplexing equipment is attached to a commingled circuit, the multiplexing equipment will be billed from the same agreement or tariff as the higher bandwidth circuit. Central Office Channel Interfaces (COCI) will be billed from the same agreement or tariff as the lower bandwidth circuit.

**Issue 15 – Is BellSouth required to provide conversion of special access circuits to UNE pricing, and, if so, at what rates, terms and conditions and during what timeframe should such new requests for such conversions be effectuated?**

**Issue 16 – What are the appropriate rates, terms and conditions and effective dates, if any, for conversion requests that were pending on the effective date of the TRO?**

**17. Conversion of Wholesale Services to Network Elements or Network Elements to Wholesale Services.**

17.1 Upon request, BellSouth shall convert a wholesale service, or group of wholesale services, to the equivalent Network Element or Combination that is available to Level 3 pursuant to this Agreement, or convert a Network Element or Combination that is available to Level 3 under this Agreement to an equivalent wholesale service or group of wholesale services offered by BellSouth (collectively "Conversion"). BellSouth shall charge 115% of the switch-as-is rate set forth in Exhibit A of Attachment 2 of the Agreement for Conversions to specific Network Elements or Combinations**.** BellSouth shall also charge the same nonrecurring switch-as-is rates when converting from Network Elements or Combinations. Any rate change resulting from the Conversion will be effective as of the next billing cycle following BellSouth's receipt of a complete and accurate Conversion request from the CLEC. A Conversion shall be considered termination for purposes of any volume and/or term commitments and/or grandfathered status between CLEC and BellSouth. Any change from a wholesale service/group of wholesale services to a Network Element/Combination, or from a Network Element/Combination to a wholesale service/group of wholesale services that requires a physical rearrangement will not be considered to be a Conversion for purposes of this Agreement. BellSouth shall not require physical rearrangements if the Conversion can be completed through record changes only. Orders for Conversions will be handled in accordance with the guidelines set forth in the Ordering Guidelines and Processes and CLEC Information Packages as referenced in Section 17.3 below.

17.2 To the extent, Level 3 had a Conversion request pending between October 2, 2003 and the effective date of this Amendment, such Conversion shall be deemed converted as of the date of such request.

**17.3 Ordering Guidelines and Processes**

17.3.1 For information regarding Ordering Guidelines and Processes for various Network Elements, Combinations and Other Services, Level 3 should refer to the "Guides" section of the BellSouth Interconnection Web site.

17.3.2 Additional information may also be found in the individual CLEC Information Packages located at the "CLEC UNE Products" on BellSouth's Interconnection Web site.

17.3.3 The provisioning of Network Elements, Combinations and Other Services to Level 3's Collocation Space will require cross-connections within the central office to connect the Network Element, Combinations or Other Services to the demarcation point associated with Level 3's Collocation Space. These cross-connects are separate components that are not considered a part of the Network Element, Combinations or Other Services and, thus, have a separate charge pursuant to this Agreement.

**Issue 19: LINE SPLITTING**: What is the appropriate ICA language to implement BellSouth's obligations with regard to line splitting?

**18. Line Splitting**

18.1 Line splitting shall mean that Level 3 purchases a whole loop and provides the splitter to provide voice and data services through an arrangement with a third party CLEC, who is either the provider of data services (Data CLEC) or the provider of voice services (Voice CLEC), to deliver voice and data service to End Users over the same Loop. The Voice CLEC and Data CLEC are different carriers, with Level 3 being either the Voice CLEC or Data CLEC.

18.2 Line Splitting – UNE-L. In the event Level 3 provides its own switching or obtains switching from a third party, Level 3 may engage in line splitting arrangements with another CLEC using a splitter, provided by Level 3, in a Collocation Space at the central office where the loop terminates into a distribution frame or its equivalent.

18.3 Line Splitting – Loop and Port

To the extent Level 3 is using a commingled arrangement that consists of an Unbundled Loop purchased pursuant to this Agreement and Local Switching provided by BellSouth pursuant to Section 271, BellSouth will permit Level 3 to utilize Line Splitting. BellSouth shall charge the applicable line splitting rates set forth in Exhibit A of Attachment 2 of the Agreement.

18.4 Level 3 shall provide BellSouth with a signed LOA between it and the third party CLEC (Data **C**LEC or Voice CLEC) with which it desires to provision Line Splitting services, where Level 3 will not provide voice and data services.

18.5 Provisioning Line Splitting and Splitter Space – Loop and Port

18.5.1 The Data LEC, Voice CLEC, or a third party may provide the splitter. When Level 3 or its authorized agent owns the splitter, Line Splitting requires the following: a non-designed analog Loop from the serving wire center to the NID at the End User's location; a collocation cross-connection connecting the

Loop to the collocation space; and a second collocation cross-connection from the collocation space connected to a voice port.

18.5.2 An unloaded 2-wire copper Loop must serve the End User. The meet point for the Voice CLEC and the Data CLEC is the point of termination on the MDF for the Data CLEC's cable and pairs.

18.5.3 The foregoing procedures are applicable to migration from a loop and port arrangement to Line Splitting Service, including a Line splitting service that includes a commingled arrangement of Loop and unbundled local switching pursuant to Section 271.

18.6 CLEC Provided Splitter – Line Splitting – Loop and Port and UNE-L

18.6.1 Level 3 or its authorized agent may purchase, install and maintain central office POTS splitters in its collocation arrangements. Level 3 or its authorized agent may use such splitters for access to its customers and to provide digital line subscriber services to its customers using the High Frequency Spectrum. Existing Collocation rules and procedures and the terms and conditions relating to Collocation set forth in Attachment 4-Central Office shall apply.

18.6.2 Any splitters installed by Level 3 or its authorized agent in its collocation arrangement shall comply with ANSI T1.413, Annex E, or any future ANSI splitter Standards. Level 3 or its authorized agent may install any splitters that BellSouth deploys or permits to be deployed for itself or any BellSouth affiliate.

18.7 Provisioning Line Splitting and Splitter Space – UNE-L

18.7.1 **Level 3** provides the splitter when providing Line Splitting with UNE-L. When Level 3 or its authorized agent owns the splitter, Line Splitting requires the following: a loop from NID at the End User's location to the serving wire center and terminating into a distribution frame or its equivalent.

18.8 Maintenance – Line Splitting – Loop and Port and UNE-L

18.8.1 BellSouth will be responsible for repairing troubles with the physical loop between the NID at the End User's premises and the termination point.

18.8.2 BellSouth must make all necessary network modifications, including providing nondiscriminatory access to operations support systems necessary for pre-ordering, ordering, provisioning, maintenance and repair, and billing for loops used in line splitting arrangements.

18.9 Indemnity

18.9.1 Level 3 shall indemnify, defend and hold harmless BellSouth from and against any claims, losses, damages and costs incurred by BellSouth, which arise out of actions related to the other service provider, except to the extent caused by BellSouth's gross negligence or willful misconduct.

**Issue 22 – What is the appropriate ICA language, if any, to address call related databases?**

**19.1 Automatic Location Identification/Data Management System**

19.1.1 911 and E911 Databases

19.1.1.1 BellSouth shall provide Level 3 with nondiscriminatory access to 911 and E911 databases on an unbundled basis, in accordance with 47 C.F.R. § 51.319 (f).

19.1.1.2 The ALI/DMS database contains End User information (including name, address, telephone information, and sometimes special information from the local service provider or End User) used to determine to which PSAP to route the call. The ALI/DMS database is used to provide enhanced routing flexibility for E911. Level 3 will be required to provide the BellSouth 911 database vendor daily service order updates to E911 database in accordance with Section 19.3.1 below.

19.2 Technical Requirements

19.2.1 BellSouth's 911 database vendor shall provide Level 3 the capability of providing updates to the ALI/DMS database through a specified electronic interface. Level 3 shall contact BellSouth's 911 database vendor directly to request interface. Level 3 shall provide updates directly to BellSouth's 911 database vendor on a daily basis. Updates shall be the responsibility of Level 3 and BellSouth shall not be liable for the transactions between Level 3 and BellSouth's 911 database vendor.

19.2.2 It is Level 3's responsibility to retrieve and confirm statistical data and to correct errors obtained from BellSouth's 911 database vendor on a daily basis. All errors will be assigned a unique error code and the description of the error and the corrective action is described in the CLEC Users Guide for Facility Based Providers that is found on the BellSouth Interconnection Web site.

19.2.3 Level 3 shall conform to the BellSouth standards as described in the CLEC Users Guide to E911 for Facilities Based Providers that is located on the BellSouth's Interconnection Web site.

19.2.4 Stranded Unlocks are defined as End User records in BellSouth's ALI/DMS database that have not been migrated for over ninety (90) days to Level 3, as a new provider of local service to the End User. Stranded Unlocks are those End User records that have been "unlocked" by the previous local exchange carrier that provided service to the End User and are open for Level 3 to assume responsibility for such records.

19.2.5 Based upon End User record ownership information available in the NPAC database, BellSouth shall provide a Stranded Unlock annual report to Level 3 that reflects all Stranded Unlocks that remain in the ALI/DMS database for over ninety (90) days. Level 3 shall review the Stranded Unlock report, identify its End User records and request to either delete

such records or migrate the records to Level 3 within two (2) months following the date of the Stranded Unlock report provided by BellSouth. Level 3 shall reimburse BellSouth for any charges BellSouth's database vendor imposes on BellSouth for the deletion of Level 3's records.

19.3 911 PBX Locate Service®. 911 PBX Locate Service is comprised of a database capability and a separate transport component.

19.3.1 Description of Product. The transport component provides a dedicated trunk path from a Private Branch Exchange (PBX) switch to the appropriate BellSouth 911 tandem.

19.3.1.1 The database capability allows Level 3 to offer an E911 service to its PBX End Users that identifies to the PSAP the physical location of the Level 3 PBX 911 End User station telephone number for the 911 call that is placed by the End User.

19.3.2 Level 3 may order either the database capability or the transport component as desired or Level 3 may order both components of the service.

19.3.3 911 PBX Locate Database Capability. Level 3's End User or Level 3's End User's database management agent (DMA) must provide the End User PBX station telephone numbers and corresponding address and location data to BellSouth's 911 database vendor. The data will be loaded and maintained in BellSouth's ALI database.

19.3.4 Ordering, provisioning, testing and maintenance shall be provided by Level 3 pursuant to the 911 PBX Locate Marketing Service Description (MSD) that is located on the BellSouth Interconnection Web site.

19.3.5 Level 3's End User, or Level 3's End User database management agent must provide ongoing updates to BellSouth's 911 database vendor within a commercially reasonable timeframe of all PBX station telephone number adds, moves and deletions. It will be the responsibility of Level 3 to ensure that the End User or DMA maintain the data pertaining to each End User's extension managed by the 911 PBX Locate Service product. Level 3 should not submit telephone number updates for specific PBX station telephone numbers that are submitted by Level 3's End User, or Level 3's End User DMA under the terms of 911 PBX Locate product.

19.3.6 Level 3 must provision all PBX station numbers in the same LATA as the E911 tandem.

19.3.7 Level 3 agrees to release, indemnify, defend and hold harmless BellSouth from any and all loss, claims, demands, suits, or other action, or any liability whatsoever, whether suffered, made, instituted or asserted by Level 3's End User or by any other party or person, for any personal injury to or death of any person or persons, or for any loss, damage or destruction of any property, whether owned by Level 3 or others, or for any infringement or invasion of the right of privacy of any person or

persons, caused or claimed to have been caused, directly or indirectly, by the installation, operation, failure to operate, maintenance, removal, presence, condition, location or use of PBX Locate Service features or by any services which are or may be furnished by BellSouth in connection therewith, including but not limited to the identification of the telephone number, address or name associated with the telephone used by the party or parties accessing 911 services using 911 PBX Locate Service hereunder, except to the extent caused by BellSouth's gross negligence or wilful misconduct. Level 3 is responsible for assuring that its authorized End Users comply with the provisions of these terms and that unauthorized persons do not gain access to or use the 911 PBX Locate Service through user names, passwords, or other identifiers assigned to Level 3's End User or DMA pursuant to these terms. Specifically, Level 3's End User or DMA must keep and protect from use by any unauthorized individual identifiers, passwords, and any other security token(s) and devices that are provided for access to this product.

19.3.8 Level 3 may only use BellSouth PBX Locate Service solely for the purpose of validating and correcting 911 related data for Level 3's End Users' telephone numbers for which it has direct management authority.

19.3.9 911 PBX Locate Transport Component. The 911 PBX Locate Service transport component requires Level 3 to order a CAMA type dedicated trunk from Level 3's End User premise to the appropriate BellSouth 911 tandem pursuant to the following provisions.

19.3.10 Except as otherwise set forth below, a minimum of two (2) End User specific, dedicated 911 trunks are required between the Level 3's End User premise and the BellSouth 911 tandem as described in BellSouth's Technical Reference (TR) 73576 and in accordance with the 911 PBX Locate Marketing Service Description located on the BellSouth Interconnection Web site. Level 3 is responsible for connectivity between the End User's PBX and Level 3's switch or POP location. Level 3 will then order 911 trunks from their switch or POP location to the BellSouth 911 tandem. The dedicated trunks shall be, at a minimum, DS0 level trunks configured as part of a digital interface (delivered over a Level 3 purchased DS1 facility that hands off at a DS1 or higher level digital or optical interface). Level 3 is responsible for ensuring that the PBX switch is capable of sending the calling station's Direct Inward Dial (DID) telephone number to the BellSouth 911 tandem in a specified Multi-frequency (MF) Address Signaling Protocol. If the PBX switch supports Primary Rate ISDN (PRI) and the calling stations are DID numbers, then the 911call can be transmitted using PRI, and there will be no requirement for the PBX Locate Transport component.

19.3.11 Ordering and Provisioning. Level 3 will submit an Access Service Request (ASR) to BellSouth to order a minimum of two (2) End User specific 911 trunks from its switch or POP location to the BellSouth 911 tandem.

19.3.12 Testing and maintenance shall be provided by Level 3 pursuant to the 911 PBX Locate Marketing Service description that is located on the BellSouth Interconnection Web site.

19.3.13 Rates. Rates for the 911 PBX Locate Service database component are set forth in Exhibit C. Trunks and facilities for 911 PBX Locate transport component may be ordered by Level 3 pursuant to the terms and conditions set forth in Attachment 3.

**Issue 23 - What is the appropriate language to implement BellSouth's obligation, if any, to offer unbundled access to newly deployed or "greenfield" fiber loops, including fiber loops deployed to the minimum point of entry (MPOE) of a multiple dwelling unit that is predominantly residential and what, if any impact does the ownership of the inside wiring from the MPOE to each end user have one this obligation?**

20.1 Fiber to the Home (FTTH) loops are local loops consisting entirely of fiber optic cable, whether dark or lit, serving an End User's premises or, in the case of predominantly residential multiple dwelling units (MDUs), a fiber optic cable, whether dark or lit, that extends to the MDU minimum point of entry (MPOE). As defined in 47 C.F.R. 68.105(B), Fiber to the Curb (FTTC) loops are local loops consisting of fiber optic cable connecting to a copper distribution plant that is not more than five hundred (500) feet from the End User's premises or, in the case of predominantly residential MDUs, not more than five hundred (500) feet from the MDU's MPOE. The fiber optic cable in a FTTC loop must connect to a copper distribution plant at a serving area interface from which every other copper distribution subloop also is not more than five hundred (500) feet from the respective End User's premises.

20.2 In new build (Greenfield) areas, where BellSouth has only deployed FTTH/FTTC facilities, BellSouth is under no obligation to provide such FTTH and FTTC Loops. FTTH facilities include fiber loops deployed to the MPOE of a MDU that is predominantly residential regardless of the ownership of the inside wiring from the MPOE to each End User in the MDU.

**Issue 24: What is the appropriate ICA language to implement BellSouth's obligation to provide unbundled access to hybrid loops?**

21. A hybrid Loop is a local Loop, composed of both, fiber optic cable usually in the feeder plant and copper twisted wire or cable usually in the distribution plant. BellSouth shall provide Level 3 with nondiscriminatory access to the time division multiplexing features, functions and capabilities of such hybrid Loop, on an unbundled basis to establish a complete transmission path between BellSouth's central office and an End User's premises.

**Issue 26: What is the appropriate ICA language to implement BellSouth's obligation to provide RNMs?**

**Issue 27: What is the appropriate process for establishing a rate, if any, to allow for the cost of a routine network modification that is not already recovered in Commission-approved recurring and nonrecurring rates? What is the appropriate language, if any, to incorporate into the ICAs?**

22. Routine Network Modifications

22.1 BellSouth will perform Routine Network Modifications (RNM) in accordance with FCC 47 CFR 51.319 (a)(7) and (e)(4) for Loops and Dedicated Transport provided under this Attachment. BellSouth shall make all routine network modifications to unbundled loop and transport facilities used by Level 3 at Level 3's request where the requested loop and/or transport facility has already been constructed. BellSouth shall perform these routine network modifications to facilities in a non-discriminatory fashion, without regard to whether the loop or transport facility being accessed was constructed on behalf, or in accordance with the specifications, of any carrier. A routine network modification is an activity that BellSouth regularly undertakes for its own customers. Routine network modifications include, but are not limited to, rearranging or splicing of cable; adding an equipment case; adding a doubler or repeater; adding a smart jack; installing a repeater shelf; adding a line card; deploying a new multiplexer or reconfiguring an existing multiplexer; and attaching electronic and other equipment that BellSouth ordinarily attaches to a loop or transport facility to serve its own customers. Routine network modifications may entail activities such as accessing manholes, deploying bucket trucks to reach aerial cable, and installing equipment casings. Routine network modifications do not include the construction of a new loop, or the installation of new aerial or buried cable for Level 3.

22.2 BellSouth shall perform routine network modifications pursuant to the existing non-recurring charges and recurring rates ordered by the state commission for the loop and transport facilities set forth in Exhibit A of Attachment 2 of the Agreement and not at an additional charge. RNM shall be performed within the intervals established for the Network Element and subject to the performance measurements and associated remedies set forth in Attachment 9 of this Agreement except to the extent BellSouth demonstrates that such RNM were not anticipated in the setting of such intervals. If BellSouth believes that it has not anticipated a requested network modification as being a RNM and has not recovered the costs of such RNM in the rates set forth in Exhibit A of Attachment 2 of the Agreement, BellSouth can seek resolution from the state commission. However, in the interim, BellSouth will perform the RNM at the existing

recurring and non-recurring rates associated with the provision of the loop or transport facility. There may not be any double recovery or retroactive recovery of these costs.

**Issue 28: What is the appropriate language, if any, to address access to overbuild deployments of fiber to the home and fiber to the curb facilities?**

23. Furthermore, in FTTH/FTTC overbuild areas where BellSouth has not yet retired copper facilities, BellSouth is not obligated to ensure that such copper Loops in that area are capable of transmitting signals prior to receiving a request for access to such Loops by Level 3. If a request is received by BellSouth for a copper Loop, and the copper facilities have not yet been retired, BellSouth will restore the copper Loop to serviceable condition if technically feasible. In these instances of Loop orders in an FTTH/FTTC overbuild area, BellSouth's standard Loop provisioning interval will apply.

**Issue 29: What is the appropriate ICA language to implement BellSouth's EEL audit rights, if any, under the TRO?**

EELs Audit provisions

24.1 BellSouth may, on an annual basis audit Level 3's records based on cause, in order to verify compliance with the high capacity EEL eligibility criteria. To invoke its limited right to audit, BellSouth will send a Notice of Audit to Level 3 stating its concern that Level 3 is not complying with the service eligibility requirements as set forth above and a concise statement of the reasons therefore. Such Notice of Audit will be delivered to Level 3 no less than thirty (30) calendar days prior to the date upon which BellSouth seeks to commence an audit. BellSouth is not required to provide documentation, as distinct from a statement of concern, to support its basis for an audit, or seek the concurrence of the requesting carrier before selecting the location of the audit.

24.2 The audit shall be conducted by a third party independent auditor, retained and paid for by BellSouth. BellSouth may select the independent auditor without the prior approval of Level 3 or the Commission. Challenges to the independence of the auditor may be filed with the Commission only after the audit has been concluded. The audit must be performed in accordance with the standards established by the American Institute for Certified Public Accountants (AICPA) which will require the auditor to perform an "examination engagement" and issue an opinion regarding Level 3's compliance with the high capacity EEL eligibility criteria. AICPA standards and other AICPA requirements will be used to determine the independence of an auditor. The independent auditor's report will conclude whether Level 3 complied in all material respects with the applicable service eligibility criteria. Consistent with standard

auditing practices, such audits require compliance testing designed by the independent auditor.

24.3 To the extent the independent auditor's report concludes that Level 3 failed to comply with the service eligibility criteria, Level 3 must true-up any difference in payments, convert all noncompliant circuits to the appropriate service, and make the correct payments on a going-forward basis.

24.4 To the extent the independent auditor's report concludes that Level 3 failed to comply in all material respects with the service eligibility criteria, Level 3 shall reimburse BellSouth for the cost of the independent auditor. To the extent the independent auditor's report concludes that Level 3 did comply in all material respects with the service eligibility criteria, BellSouth will reimburse Level 3 for its reasonable and demonstrable costs associated with the audit. Level 3 will maintain appropriate documentation to support its certifications. The Parties shall provide such reimbursement within thirty (30) calendar days of receipt of a statement of such costs.

25. Level 3 shall not obtain a Network Element for the exclusive provision of mobile wireless services or interexchange services.

26. Facilities that do not terminate at a demarcation point at an End User premises, including, by way of example, but not limited to, facilities that terminate to another carrier's switch or premises, a cell site, Mobile Switching Center or base station, do not constitute local Loops under Section 251, except to the extent that Level 3 may require Loops to such locations for the purpose of providing telecommunications services to its personnel at those locations.

27. Subloop Elements.

27.1 Where facilities permit, BellSouth shall offer access to its Unbundled Subloop (USL) elements as specified herein.

27.2 Unbundled Subloop Distribution (USLD)

27.2.1 The USLD facility is a dedicated transmission facility that BellSouth provides from an End User's point of demarcation to a BellSouth cross-connect device. The BellSouth cross-connect device may be located within a remote terminal (RT) or a stand-alone cross-box in the field or in the equipment room of a building. The USLD media is a copper twisted pair that can be provisioned as a 2-wire or 4-wire facility. BellSouth will make available the following subloop distribution offerings where facilities exist:

USLD – Voice Grade (USLD-VG)
Unbundled Copper Subloop (UCSL)

USLD – Intrabuilding Network Cable (USLD-INC (aka riser cable))

27.2.2 USLD-VG is a copper subloop facility from the cross-box in the field up to and including the point of demarcation at the End User's premises and may have load coils.

27.2.3 UCSL is a copper facility eighteen thousand (18,000) feet or less in length provided from the cross-box in the field up to and including the End User's point of demarcation. If available, this facility will not have any intervening equipment such as load coils between the End User and the cross-box.

27.2.4 If Level 3 requests a UCSL and it is not available, Level 3 may request the copper Subloop facility be modified pursuant to the ULM process to remove load coils and/or excessive bridged taps. If load coils and/or excessive bridged taps are removed, the facility will be classified as a UCSL.

27.2.5 USLD-INC is the distribution facility owned or controlled by BellSouth inside a building or between buildings on the same property that is not separated by a public street or road. USLD-INC includes the facility from the cross-connect device in the building equipment room up to and including the point of demarcation at the End User's premises.

27.2.6 Upon request for USLD-INC from Level 3, BellSouth will install a cross-connect panel in the building equipment room for the purpose of accessing USLD-INC pairs from a building equipment room. The cross-connect panel will function as a single point of interconnection (SPOI) for USLD-INC and will be accessible by multiple carriers as space permits. BellSouth will place cross-connect blocks in twenty five (25) pair increments for Level 3's use on this cross-connect panel. Level 3 will be responsible for connecting its facilities to the twenty five (25) pair cross-connect block(s).

27.2.7 For access to Voice Grade USLD and UCSL, Level 3 shall install a cable to the BellSouth cross-box pursuant to the terms and conditions for physical collocation for remote sites set forth in Attachment 4. This cable would be connected by a BellSouth technician within the BellSouth cross-box during the set-up process. Level 3's cable pairs can then be connected to BellSouth's USL within the BellSouth cross-box by the BellSouth technician.

27.2.8 Through the SI process, BellSouth will determine whether access to USLs at the location requested by Level 3 is technically feasible and whether sufficient capacity exists in the cross-box. If existing capacity is sufficient to meet Level 3's request, then BellSouth will perform the site set-up as described in the CLEC Information Package, located at BellSouth's

Interconnection Web site:
www.interconnection.bellsouth.com/products/html/unes.html.

27.2.9 The site set-up must be completed before Level 3 can order Subloop pairs. For the site set-up in a BellSouth cross-connect box in the field, BellSouth will perform the necessary work to splice Level 3's cable into the cross-connect box. For the site set-up inside a building equipment room, BellSouth will perform the necessary work to install the cross-connect panel and the connecting block(s) that will be used to provide access to the requested USLs.

27.2.10 Once the site set-up is complete, Level 3 will request Subloop pairs through submission of a LSR form to the LCSC. OC is required with USL pair provisioning when Level 3 requests reuse of an existing facility, and the OC charge shall be billed in addition to the USL pair rate. For expedite requests by Level 3 for Subloop pairs, expedite charges will apply for intervals less than five (5) days.

27.2.11 USLs will be provided in accordance with BellSouth's TR73600 Unbundled Local Loop Technical Specifications.

27.3 Unbundled Network Terminating Wire (UNTW)

27.3.1 UNTW is unshielded twisted copper wiring that is used to extend circuits from an intra-building network cable terminal or from a building entrance terminal to an individual End User's point of demarcation. It is the final portion of the Loop that in multi-subscriber configurations represents the point at which the network branches out to serve individual subscribers.

27.3.1.1 This element will be provided in MDUs and/or Multi-Tenants Units (MTUs) where either Party owns wiring all the way to the End User's premises. Neither Party will provide this element in locations where the property owner provides its own wiring to the End User's premises, where a third party owns the wiring to the End User's premises.

27.3.2 Requirements

27.3.2.1 On a multi-unit premises, upon request of the other Party (Requesting Party), the Party owning the network terminating wire (Provisioning Party) will provide access to UNTW pairs on an Access Terminal that is suitable for use by multiple carriers at each Garden Terminal or Wiring Closet.

27.3.2.2 The Provisioning Party shall not be required to install new or additional NTW beyond existing NTW to provision the services of the Requesting Party.

27.3.2.3 In existing MDUs and/or MTUs in which BellSouth does not own or control wiring (INC/NTW) to the End Users premises, and Level 3 does own or control such wiring, Level 3 will install UNTW Access Terminals for BellSouth under the same terms and conditions as BellSouth provides UNTW Access Terminals to Level 3.

27.3.2.4 In situations in which BellSouth activates a UNTW pair, BellSouth will compensate Level 3 for each pair activated commensurate to the price specified in Level 3's Agreement.

27.3.2.5 Upon receipt of the UNTW SI requesting access to the Provisioning Party's UNTW pairs at a multi-unit premises, representatives of both Parties will participate in a meeting at the site of the requested access. The purpose of the site visit will include discussion of the procedures for installation and location of the Access Terminals. By request of the Requesting Party, an Access Terminal will be installed either adjacent to each of the Provisioning Party's Garden Terminal or inside each Wiring Closet. The Requesting Party will deliver and connect its central office facilities to the UNTW pairs within the Access Terminal. The Requesting Party may access any available pair on an Access Terminal. A pair is available when a pair is not being utilized to provide service or where the End User has requested a change in its local service provider to the Requesting Party. Prior to connecting the Requesting Party's service on a pair previously used by the Provisioning Party, the Requesting Party is responsible for ensuring the End User is no longer using the Provisioning Party's service or another CLEC's service before accessing UNTW pairs.

27.3.2.6 Access Terminal installation intervals will be established on an individual case basis.

27.3.2.7 The Requesting Party is responsible for obtaining the property owner's permission for the Provisioning Party to install an Access Terminal(s) on behalf of the Requesting Party. The submission of the SI by the Requesting Party will serve as certification by the Requesting Party that such permission has been obtained. If the property owner objects to Access Terminal installations that are in progress or within thirty (30) days after completion and demands removal of Access Terminals, the Requesting Party will be responsible for costs associated with removing Access Terminals and restoring the property to its original state prior to Access Terminals being installed.

27.3.2.8 The Requesting Party shall indemnify and hold harmless the Provisioning Party against any claims of any kind that may arise out of the Requesting Party's failure to obtain the property owner's permission. The Requesting Party will be billed for nonrecurring and recurring charges for accessing UNTW pairs at the time the Requesting Party activates the pair(s). The Requesting Party will notify the Provisioning Party within five (5) business days of activating UNTW pairs using the LSR form.

27.3.2.9 If a trouble exists on a UNTW pair, the Requesting Party may use an alternate spare pair that serves that End User if a spare pair is available. In such cases, the Requesting Party will re-terminate its existing jumper from the defective pair to the spare pair. Alternatively, the Requesting Party will isolate and report troubles in the manner specified by the Provisioning Party. The Requesting Party must tag the UNTW pair that requires repair.

If the Provisioning Party dispatches a technician on a reported trouble call and no UNTW trouble is found, the Provisioning Party will charge Requesting Party for time spent on the dispatch and testing the UNTW pair(s).

27.3.2.10 If the Requesting Party initiates the Access Terminal installation and the Requesting Party has not activated at least ten percent (10%) of the capacity of the Access Terminal installed pursuant to the Requesting Party's request for an Access Terminal within six (6) months of installation of the Access Terminal, the Provisioning Party will bill the Requesting Party a nonrecurring charge equal to the actual cost of provisioning the Access Terminal.

27.3.3.11 If the Provisioning Party determines that the Requesting Party is using the UNTW pairs without reporting the activation of the pairs, the Requesting Party will be billed for the use of that pair back to the date the End User began receiving service from the Requesting Party at that location. Upon request, the Requesting Party will provide copies of its billing record to substantiate such date. If the Requesting Party fails to provide such records, then the Provisioning Party will bill the Requesting Party back to the date of the Access Terminal installation.

## 28. 271 Requirements

28.1 This Section sets forth terms and conditions for de-listed network elements that BellSouth is required to offer pursuant to the Georgia Public Service Commission's Order in Docket No. 19341-U (Order) to Level 3 for Level 3's provision of Telecommunications Services in accordance with its obligations under Section 271 of the Act ("271").

28.1.1 To the extent DS1 and/or DS3 Loops, DS1 and/or DS3 Dedicated Transport and Multiplexing are not available elsewhere in the Agreement, these services will be made available pursuant to Section 271 of the Act at the rates set forth in Exhibit C to this Amendment.

28.2 271 Dark Fiber Loops, 271 DS1 and DS3 Entrance Facilities, and 271 Dark Fiber Transport Facilities are available at the rates, terms, and conditions set forth in the applicable BellSouth tariff.

28.3 Line Sharing

28.3.1 General**.** Line Sharing is defined as the process by which Level 3 provides digital subscriber line service ("xDSL") over the same copper Loop that BellSouth uses to provide retail voice service, with BellSouth using the low frequency portion of the Loop and Level 3 using the high frequency spectrum (as defined below) of the Loop.

28.3.2 Line Sharing arrangements in service as of October 1, 2003 will be billed at the rates set forth in Exhibit A of Attachment 2 of the Agreement**.**

28.3.3 For Line Sharing arrangements placed in service between October 2, 2003, and October 1, 2004 the rates will be as set forth in Exhibit A of Attachment 2 of the Agreement**.**

28.3.4 For Line Sharing arrangements placed on or after October 2, 2004 (whether under this Agreement only, or under this Agreement and a prior Agreement), the rates will be the full copper loop rate as set forth in Exhibit A of Attachment 2 of the Agreement.

28.3.5 As of October 2, 2006, the rates for Line Sharing arrangements shall be as set forth in Exhibit B to this Amendment.

28.3.6 The High Frequency Spectrum is defined as the frequency range above the voiceband on a copper Loop facility carrying analog circuit-switched voiceband transmissions. Access to the High Frequency Spectrum is intended to allow Level 3 the ability to provide xDSL data services to the End User for which BellSouth provides voice services.

28.3.7 The High Frequency Spectrum shall be available for any version of xDSL complying with Spectrum Management Class *5* of ANSI TI.417**,** American National Standard for Telecommunications, Spectrum Management for Loop Transmission Systems. BellSouth will continue to have access to the low frequency portion of the Loop spectrum (from 300 Hertz to at least 3000 Hertz, and potentially up to 3400 Hertz, depending on equipment and facilities) for the purposes of providing voice service. Level 3 shall only use xDSL technology that is within the PSD mask for Spectrum Management Class *5* as found in the abovementioned document.

28.3.8 Access to the High Frequency Spectrum requires an unloaded, 2-wire copper Loop. An unloaded Loop is a copper Loop with no load coils, lowpass filters, range extenders, DAMLs, or similar devices and minimal bridged taps consistent with ANSI T1.413 and TI .601.

28.3.9 BellSouth will provide Loop Modification to Level 3 on an existing Loop for Line Sharing in accordance with procedures as specified in Attachment 2 of this Agreement. BellSouth is not required to modify a Loop for access to the High Frequency spectrum if modification of that Loop significantly degrades BellSouth's voice service. If Level 3 requests that BellSouth modify a Loop and such modification significantly degrades the voice services on the Loop, Level 3 shall pay for the Loop to be restored to its original state.

28.3.10 Line Sharing shall only be available on Loops on which BellSouth is also providing, and continues to provide, analog voice service directly to the End User. In the event the End User terminates its BellSouth provided

voice service for any reason, or in the event BellSouth disconnects the End User's voice service pursuant to its tariffs or applicable law, and Level 3 desires to continue providing xDSL service on such Loop, Level 3 or the new voice provider, or both, shall be required to purchase a full stand-alone Loop. In those cases in which BellSouth no longer provides voice service to the End User and Level 3 purchases the full stand-alone Loop, Level 3 may elect the type of Loop it will purchase. Level 3 will pay the appropriate recurring and nonrecurring rates for such Loop as set forth in Exhibit A of Attachment 2 of the Agreement. In the event Level 3 purchases a voice grade Loop, Level 3 acknowledges that such Loop may not remain xDSL compatible.

28.3.11 Only one CLEC shall be permitted access to the High Frequency Spectrum of any particular Loop.

28.3.12 Provisioning of Line Sharing and Splitter Space. BellSouth will provide Level 3 with access to the High Frequency Spectrum as follows:

28.3.12.1 To order High Frequency Spectrum on a particular Loop, Level 3 must have a Digital Subscriber Line Access Multiplexer (DSLAM) collocated in the central office that serves the End User of such Loop.

28.3.12.2 Level 3 may provide its own splitters or may order splitters in a central office once it has installed its DSLAM in that central office. BellSouth will install splitters within thirty-six (36) calendar days of Level 3's submission of an error free Line Splitter Ordering Document (LSOD) to the BellSouth Complex Resale Support Group.

28.3.12.3 Once a splitter is installed on behalf of Level 3 in a central office in which Level 3 is located, Level 3 shall be entitled to order the High Frequency Spectrum on lines served out of that central office. BellSouth will bill and Level 3 shall pay the electronic or manual ordering charges, as set forth in Exhibit A of Attachment 2 of the Agreement, as applicable when Level 3 orders High Frequency Spectrum for End User service.

28.3.12.4 Once BellSouth has placed cross-connects on behalf of Level 3 to provide Level 3 access to the High Frequency Spectrum and chooses to rearrange its splitter or CLEC pairs, Level 3 may order the rearrangement of its splitter or cable pairs via "Subsequent Activity". Subsequent Activity is any rearrangement of Level 3's cable pairs or splitter ports after BellSouth has placed cross-connection to provide Level 3 access to the High Frequency Spectrum. BellSouth shall bill and Level 3 shall pay the Subsequent Activity charges as set forth in Exhibit B of this Amendment.

28.3.13 BellSouth Provided Splitter – Line Sharing. BellSouth will select, purchase, install, and maintain a central office POTS splitter and provide Level 3 access to data ports on the splitter. The splitter will route the High

Frequency Spectrum on the circuit to Level 3's xDSL equipment in Level 3's collocation space. At least thirty (30) calendar days before making a change in splitter suppliers, BellSouth will provide Level 3 with a carrier notification letter, informing Level 3 of change. Level 3 shall purchase ports on the splitter in increments of eight (8), twenty-four (24), or ninety-six (96) ports.

28.3.14 BellSouth will install the splitter in (i) a common area close to Level 3's collocation area, if possible; or (ii) in a BellSouth relay rack as close to Level 3's DS0 termination point as possible. For purposes of this section, a common area is defined as an area in the central office in which both Parties have access to a common test access point. A Termination Point is defined as the point of termination for Level 3 on the main distributing frame in the central office and is not the demarcation point set forth in Attachment 4 of this Agreement. BellSouth will cross-connect the splitter data ports to a specified Level 3 DS0 at such time that a Level 3 End User's service is established.

28.3.15 CLEC Provided Splitter – Line Sharing. Level 3 may at its option purchase, install and maintain central office POTS splitters in its collocation arrangements. Level 3 may use such splitters to provide xDSL services to its End Users using the High Frequency Spectrum. Existing Collocation rules and procedures and the terms and conditions relating to Collocation set forth in Attachment 4-Central Office shall apply.

28.3.16 Any splitters installed by Level 3 in its collocation arrangement shall comply with ANSI T1.413, Annex E, or any future ANSI splitter Standards. Level 3 may install any splitters that BellSouth deploys or permits to be deployed for itself or any BellSouth affiliate.

28.3.17 Ordering – Line Sharing. Level 3 shall use BellSouth's LSOD to order splitters from BellSouth and to activate and deactivate DS0 Collocation Connecting Facility Assignments (CFA) for use with High Frequency Spectrum.

28.3.18 BellSouth's Local Ordering Handbook (LOH) will provide Level 3 the LSR format to be used when ordering disconnections of the High Frequency Spectrum or Subsequent Activity.

28.3.19 BellSouth will provision High Frequency Spectrum in compliance with BellSouth's Products and Services Interval Guide available at BellSouth's Interconnection Web site.

28.3.20 BellSouth shall test the data portion of the Loop to ensure the continuity of the wiring for Level 3's data.

28.3.21 BellSouth will provide Level 3 access to Preordering LMU in accordance with the terms of this Agreement. BellSouth shall bill and Level 3 shall

pay the rates for such services, as described in Exhibit B of this Amendment.

28.3.22 Maintenance and Repair - Line Sharing. Level 3 shall have access for repair and maintenance purposes to any Loop for which it has access to the High Frequency Spectrum. Level 3 may test from the collocation space, the Termination Point, or the NID. BellSouth will be responsible for repairing voice services and the physical line between the NID at the End User's premises and the Termination Point. Level 3 will be responsible for repairing its data services. Each Party will be responsible for maintaining its own equipment.

28.3.23 Level 3 shall inform its End Users to direct data problems to Level 3, unless both voice and data services are impaired, in which event Level 3 should direct the End Users to contact BellSouth. Once a Party has isolated a trouble to the other Party's portion of the Loop, the Party isolating the trouble shall notify the End User that the trouble is on the other Party's portion of the Loop.

28.3.24 If Level 3 reports a trouble on the High Frequency Spectrum of a Loop and no trouble actually exists on the BellSouth portion, or BellSouth isolates the trouble to the physical collocation arrangement belonging to Level 3, BellSouth will charge Level 3 for any dispatching and testing (both inside and outside the CO) required by BellSouth in order to confirm the working status. The rates charged for no trouble found (NTF) shall be as set forth in Exhibit B of this Amendment.

| 271 ELEMENTS - Georgia | | | | | | | | | | | | | | Attachment: 2 Exh B | | | | |
|---|---|---|---|---|---|---|---|---|---|---|---|---|---|---|---|---|---|---|
| CATEGORY | RATE ELEMENTS | Interim | Zone | BCS | USOC | RATES($) | | | | | Svc Order Submitted Elec per LSR | Svc Order Submitted Manually per LSR | Incremental Charge - Manual Svc Order vs. Electronic-1st | Incremental Charge - Manual Svc Order vs. Electronic-Add'l | Incremental Charge - Manual Svc Order vs. Electronic-Disc 1st | Incremental Charge - Manual Svc Order vs. Electronic-Disc Add'l | |
| | | | | | | | Nonrecurring | | Nonrecurring Disconnect | | | | OSS Rates($) | | | | |
| | | | | | | Rec | First | Add'l | First | Add'l | SOMEC | SOMAN | SOMAN | SOMAN | SOMAN | SOMAN | |
| | The "Zone" shown in the sections for stand-alone loops or loops as part of a combination refers to Geographically Deaveraged UNE Zones. To view Geographically Deaveraged UNE Zone Designations by Central Office, refer to internet Website: http://www.interconnection.bellsouth.com/become_a_clec/html/interconnection.htm | | | | | | | | | | | | | | | | |
| UNBUNDLED EXCHANGE ACCESS LOOP | | | | | | | | | | | | | | | | | |
| | 4-WIRE DS1 DIGITAL LOOP | | | | | | | | | | | | | | | | |
| | 271 - 4-Wire DS1 Digital Loop - Zone 1 | | | | | 85.97 | 211.72 | 72.42 | 38.20 | 7.19 | | | | | | | |
| | 271 - 4-Wire DS1 Digital Loop - Zone 2 | | | | | 81.27 | 211.72 | 72.42 | 38.20 | 7.19 | | | | | | | |
| | 271 - 4-Wire DS1 Digital Loop - Zone 3 | | | | | 128.28 | 211.72 | 72.42 | 38.20 | 7.19 | | | | | | | |
| COMMINGLING | | | | | | | | | | | | | | | | | |
| | COMMINGLING (Loop as part of a multi-bandwidth commingling arrangement) | | | | | | | | | | | | | | | | |
| | 4-Wire DS1 Digital Loop - Zone 1 | | | | | 85.97 | 211.72 | 72.42 | 38.20 | 7.19 | | | | | | | |
| | 4-Wire DS1 Digital Loop - Zone 2 | | | | | 81.27 | 211.72 | 72.42 | 38.20 | 7.19 | | | | | | | |
| | 4-Wire DS1 Digital Loop - Zone 3 | | | | | 128.28 | 211.72 | 72.42 | 38.20 | 7.19 | | | | | | | |
| LINE SHARING | | | | | | | | | | | | | | | | | |
| | NOTE: The Line Sharing monthly recurring rates for all installations completed on or after October 02, 2003 shall be billed as follows: | | | | | | | | | | | | | | | | |
| | NOTE 2: These line sharing rates are effective Octover 2, 2006 | | | | | | | | | | | | | | | | |
| | LINE SHARING | | | | | | | | | | | | | | | | |
| | SPLITTERS-CENTRAL OFFICE BASED | | | | | | | | | | | | | | | | |
| | Line Sharing Splitter, per System 96 Line Capacity w/o test jack (E:10/2/2006) | | | ULS | ULSDA | 117.18 | 243.66 | 0.00 | 90.11 | 0.00 | | | | | | | |
| | Line Sharing Splitter, per System 24 Line Capacity w/o test jack (E:10/2/2006) | | | ULS | ULSDB | 29.30 | 243.66 | 0.00 | 90.11 | 0.00 | | | | | | | |
| | Line Sharing Splitter, Per System, 8 Line Capacity w/o test jack (E:10/2/2006) | | | ULS | ULSD8 | 9.77 | 243.66 | 0.00 | 90.11 | 0.00 | | | | | | | |
| | END USER ORDERING-CENTRAL OFFICE BASED LINE SHARING | | | | | | | | | | | | | | | | |
| | Line Sharing - per Line Activation (BST Owned splitter) (E:10/2/2006) | | | ULS | ULSDT | 6.50 | 24.53 | 0.00 | 12.26 | 0.00 | | | | | | | |
| | Line Sharing - per Subsequent Activity per Line Rearrangement (BST Owned Splitter) (E:10/2/2006) | | | ULS | ULSDS | | 48.91 | 17.86 | 22.87 | 2.28 | | | | | | | |
| | Loop Modification | | | | | | | | | | | | | | | | |
| | Unbundled Loop Modification -- Load Coil/Equipment Removal (E:10/2/2006) | | | ULS | ULM2L | | 29.97 | | | | | | | | | | |
| | Unbundled Loop Modification -- Bridged Tap Removal (E:10/2/2006) | | | ULS | ULMBT | | 68.11 | | | | | | | | | | |
| | MAINTENANCE | | | | | | | | | | | | | | | | |
| | No Trouble Found - per 1/2 hour increments - Basic | | | | | | 80.00 | 0.00 | | | | | | | | | |
| | No Trouble Found - per 1/2 hour increments - Overtime | | | | | | 120.00 | 0.00 | | | | | | | | | |
| | No Trouble Found - per 1/2 hour increments - Premium | | | | | | 160.00 | 0.00 | | | | | | | | | |
| GA 271 | | | | | | | | | | | | | | | | | |
| | DS1 Interoffice Channel Facility Termination (271 standalone) | | | | | 44.04 | 110.92 | 80.20 | 31.33 | 21.71 | | | | | | | |
| | DS1 Interoffice Channel per mile (271 standalone) | | | | | 0.1417 | | | | | | | | | | | |
| | DS3 Interoffice Channel Facility Termination (271 standalone) | | | | | 440.53 | 320.16 | 86.24 | 66.71 | 52.76 | | | | | | | |
| | DS3 Interoffice Channel per mile (271 standalone) | | | | | 3.11 | | | | | | | | | | | |
| | DS3 Local Loop Facility Termination (271 standalone) | | | | | 323.53 | 1,751.51 | 131.77 | 112.80 | 75.81 | | | | | | | |
| | DS3 Local Loop per mile (271 standalone) | | | | | 13.47 | | | | | | | | | | | |
| | DS1 Interoffice Channel Facility Termination (271 part combination) | | | | | 44.04 | 110.92 | 80.20 | 31.33 | 21.71 | | | | | | | |
| | DS1 Interoffice Channel per mile (271 part in combination) | | | | | 0.1417 | | | | | | | | | | | |
| | DS3 Interoffice Channel Facility Termination (271 part in combination) | | | | | 440.53 | 320.16 | 86.24 | 66.71 | 52.76 | | | | | | | |
| | DS3 Interoffice Channel per mile (271 part in combination) | | | | | 3.11 | | | | | | | | | | | |
| | DS3/DS1 Channel System (271 part in combination) | | | | | 157.48 | 0.00 | 0.00 | 0.00 | 0.00 | | | | | | | |
| | DS3 Local Loop Facility Termination (271 part in combination) | | | | | 323.53 | 1,751.51 | 131.77 | 112.80 | 75.81 | | | | | | | |
| | DS3 Local Loop per mile (271 part in combination) | | | | | 13.47 | | | | | | | | | | | |
| | DS1 Local Loop in combination (271 part in combination) | | | | | 85.97 | 209.25 | 70.37 | 37.87 | 6.86 | | | | | | | |
| | DS1 Local Loop in combination (271 part in combination) | | | | | 81.27 | 209.25 | 70.37 | 37.87 | 6.86 | | | | | | | |
| | DS1 Local Loop in combination (271 part in combination) | | | | | 128.28 | 209.25 | 70.37 | 37.87 | 6.86 | | | | | | | |
| | DS1 COCI (271 part in combination) | | | | | 9.50 | 27.30 | 2.90 | 16.85 | 1.04 | | | | | | | |

**AMENDMENT**
**TO THE**
**AGREEMENT BETWEEN**
**Level 3 Communications, L.L.C.**
**AND**
**BELLSOUTH TELECOMMUNICATIONS, INC.**
**DATED June 23, 2004**

Pursuant to this Amendment, (the "Amendment"), Level 3 Communications, L.L.C. ("Level 3"), and BellSouth Telecommunications, Inc. ("BellSouth"), hereinafter referred to collectively as the "Parties", hereby agree to amend that certain Interconnection Agreement between the Parties dated June 23, 2004 ("Agreement").

WHEREAS, on July 25, 2006, the Louisiana Public Service Commission ("Commission") issued its Order in Docket No. U-28356 ("Order"), Petition Regarding the Establishment of a Generic Proceeding on Change of Law and Nondiscriminatory Pricing for UNEs; and

WHEREAS, the Parties are obligated to amend the Agreement to bring it in compliance with the Commission's Order; and

WHEREAS, the Parties enter into this Amendment without prejudice to any position they may take, or have taken, with respect to similar future agreements between the Parties; and

NOW, THEREFORE, in consideration of the mutual provisions contained herein and other good and valuable consideration, the receipt and sufficiency of which are hereby acknowledged, the Parties hereby covenant and agree as follows:

1. The Parties hereby agree to incorporate into the Agreement the contract provisions set forth in Exhibit A hereto, and such contract provisions shall apply to services provided in the state of Louisiana only.

2. The Parties hereby agree to incorporate into the Agreement the rates set forth in Exhibit B and C hereto, and such rates shall apply to services provided in the state of Louisiana only.

3. To the extent that such contract provisions or rates as set forth in Exhibits A, B and C hereto conflict with any other rates, terms and conditions in the Agreement, the contract provisions and rates in Exhibits A, B and C shall prevail in the state of Louisiana.

4. Further, to the extent that defined terms in this Amendment differ from defined terms in the Agreement, such defined terms in the Agreement shall be deemed to have the same meaning as the alternative defined terms in this Amendment to the extent necessary to give full effect to this Amendment consistent with the Louisiana Public Service Commission's Orders.

5. This Amendment shall be deemed effective on March 11, 2006 ("Effective Date").

6. All of the other provisions of the Agreement shall remain in full force and effect.

7. Either or both of the Parties are authorized to submit this Amendment to the Louisiana Public Service Commission for approval subject to Section 252(e) of the Federal Telecommunications Act of 1996.

IN WITNESS WHEREOF, the Parties have executed this Amendment the day and year written below.

| **BellSouth Telecommunications, Inc.** | **Level 3 Communications, L.L.C.** |
|---|---|
| By: Kristen E. Shore | By: |
| Name: Kristen E. Shore | Name: Andrea L. Gawkins |
| Title: Director | Title: Vice President |
| Date: 4/24/07 | Date: 4/19/07 |

Version: LA COL Amendment
08/23/06

**1. Transition for DS1 and DS3 Loops**

1.1 For purposes of this Section 1, the Transition Period for the Embedded Base of DS1 and DS3 Loops and for the Excess DS1 and DS3 Loops is the twelve (12) month period beginning March 11, 2005 and ending March 10, 2006.

1.2 For purposes of this Section 1, Embedded Base means DS1 and DS3 Loops that were in service for Level 3 as of March 11, 2005 in those wire centers that, as of such date, met the criteria set forth in Section 1.4.1 and 1.4.2.

1.3 Excess DS1 and DS3 Loops are those Level 3 DS1 and DS3 Loops in service as of March 11, 2005, in excess of the caps set forth in Sections 1.3.1 and 1.3.2 below, respectively.

1.3.1 Level 3 may obtain a maximum of ten (10) unbundled DS1 Loops to any single building in which such Loops are still subject to unbundling requirements.

1.3.2 Level 3 may obtain a maximum of one (1) Unbundled DS3 Loop to any single building in which such Loops are still subject to unbundling requirements.

1.4 Level 3 may obtain access to the following:

1.4.1 Unbundled DS1 Loops to any Building not served by a wire center with at least 60,000 Business Lines and four (4) or more fiber-based collocators.

1.4.2 Unbundled DS3 Loops to any Building not served by a wire center with at least 38,000 Business Lines and four (4) or more fiber-based collocators.

1.5 The Initial Unimpaired Wire Center List setting forth the wire centers meeting the criteria set forth in Sections 1.4.1 and 1.4.2 above, is set forth in Carrier Notification Letter SN91086185, which is available on BellSouth's Interconnection Web site.

1.6 Transition Period Pricing. From March 11, 2005, through the expiration of the Transition Period, BellSouth shall charge/collect a rate for Level 3's Embedded Base and Level 3's Excess DS1 and DS3 Loops equal to 115% of the rate paid for that element on June 15, 2004.

1.6.1 These rates shall be as set forth in Exhibit A to Attachment 2 of the Agreement and this Section 1.6.

1.7 If Level 3 failed to submit the spreadsheet(s) for its Embedded Base and Excess DS1 and DS3 Loops on or before March 10, 2006, BellSouth will identify and transition such circuits to the equivalent wholesale services provided by BellSouth. Those circuits identified and transitioned by BellSouth pursuant to this Section shall be subject to nonrecurring switch-as-is charge as set forth in Exhibit

A to Attachment 2 of the Agreement.

1.7.1 For Embedded Base circuits and Excess DS1 and DS3 Loops converted, the applicable recurring tariff charge shall apply to each circuit as of March 11, 2006. The transition of the Embedded Base and Excess DS1 and DS3 Loops should be performed in a manner that avoids, or otherwise minimizes to the extent possible, disruption or degradation to Level 3's customers' service.

**2. Dark Fiber Loop**

2.1 Dark Fiber Loop is an unused optical transmission facility, without attached signal regeneration, multiplexing, aggregation or other electronics, from the demarcation point at an End User's premises to the End User's serving wire center. Dark Fiber Loops may be strands of optical fiber existing in aerial or underground structure. BellSouth will not provide line terminating elements, regeneration or other electronics necessary for Level 3 to utilize Dark Fiber Loops.

2.2 Transition for Dark Fiber Loop

2.2.1 For purposes of this Section 2.2, the Transition Period for Dark Fiber Loops is the eighteen (18) month period beginning March 11, 2005 and ending September 10, 2006.

2.2.2 For purposes of this Section 2.2, Embedded Base means Dark Fiber Loops that were in service for Level 3 as of March 11, 2005 and/or added during the Transition Period as pursuant to Commission Order.

2.2.3 During the Transition Period only, BellSouth shall make available for the Embedded Base Dark Fiber Loops for Level 3 at the terms and conditions set forth in this Attachment.

2.2.4 Transition Period Pricing. From March 11, 2005, through the completion of the Transition Period, BellSouth shall charge a rate for Level 3's Embedded Base of Dark Fiber Loops equal to 115% of the rate paid for that element on June 15, 2004.

2.2.4.1 These rates shall be as set forth in Exhibit A to Attachment 2 of the Agreement and this Section 2.2.4.

2.2.4.2 The Transition Period shall apply only to Level 3's Embedded Base and Level 3 shall not add new Dark Fiber Loops pursuant to this Agreement.

2.2.5 Effective September 11, 2006, Dark Fiber Loops shall no longer be made available pursuant to this Agreement.

2.2.6 Level 3 shall strive to provide spreadsheets to BellSouth no later than September 10, 2006, identifying the specific Dark Fiber Loops, to be either disconnected or

converted to other BellSouth services. Level 3 may transition from Dark Fiber Loops to other available wholesale facilities provided by BellSouth, including special access, wholesale facilities obtained from other carriers, or self-provisioned facilities. For Conversions as defined in Section 14, such spreadsheets shall take the place of an LSR or ASR. The Parties shall negotiate a project schedule for the Conversion of the Embedded Base Dark Fiber Loops.

2.2.6.1 If Level 3 submits the spreadsheets specified in Section 2.2.6 above for all of its Embedded Base on or before September 10, 2006, Conversions shall be subject to Commission-approved switch-as-is charges and no disconnect charges.

2.2.6.2 If Level 3 fails to submit the spreadsheet(s) specified in Section 2.2.6 above for all of its Embedded Base on or before September 10, 2006, BellSouth will identify Level 3's remaining Embedded Base, if any, and will transition such circuits to the equivalent tariffed BellSouth service(s). Those circuits identified and transitioned by BellSouth pursuant to this Section 2.2.6.2 shall be subject to a non-recurring switch-as-is charge as set forth in Exhibit A to Attachment 2 of the Agreement.

2.2.6.3 For Embedded Base circuits converted or transitioned, the applicable recurring tariff charge shall apply to each circuit as of September 11, 2006. The transition of the Embedded Base circuits should be performed in a manner that avoids, or otherwise minimizes to the extent possible, disruption or degradation to Level 3's customers' service.

**3. Local Switching**

3.1 Local Switching is not available pursuant to this Agreement.

**4. UNE-P**

4.1 UNE-P is DS0 Local Switching, in combination with a Loop and Common (Shared) Transport used to provide local exchange service for the origination or termination of calls. UNE-P supports the same local calling and feature requirements as described in the Local Switching section of this Attachment and the ability to presubscribe to a primary carrier for intraLATA toll service and/or to presubscribe to a primary carrier for interLATA toll service.

4.2 Notwithstanding anything to the contrary in this Agreement, BellSouth is not required to provide UNE-P pursuant to this Agreement except as set forth in this Section.

4.3 Transition Period for UNE-P

4.3.1 For purposes of this Section 4, the Transition Period for UNE-P is the twelve (12) month period beginning March 11, 2005 and ending March 10, 2006.

4.3.2 For purposes of this Section 4.3, Embedded Base shall mean UNE-P and any additional elements that are required to be provided in conjunction with UNE-P (signaling networks, call-related databases, and shared transport), as such elements are defined at 47 C.F.R. §51.319(d)(4)(i), that were in service for Level

3 as of March 11, 2005 and/or added during the Transition Period pursuant to Commission order. Subsequent disconnects and/or loss of End Users shall be removed from the Embedded Base.

4.3.3 Transition Period Pricing. From March 11, 2005, through the completion of the Transition Period, BellSouth shall charge/collect a rate for Level 3's Embedded Base of Local Switching equal to the rate at which during Level 3 leased that combination of elements on June 15, 2004, plus one dollar.

4.3.3.1 These rates shall be as set forth in Exhibit A to Attachment 2 of the Parties Agreement and this Section 4.3.3.

4.3.4 If Level 3 failed to submit orders or spreadsheets converting all of the Embedded Base of UNE-P on or before March 10, 2006, BellSouth will identify Level 3's remaining Embedded Base of UNE-P and will transition such UNE-P to resold BellSouth telecommunication services, as set forth in Attachment 1 to the Agreement. Those circuits identified and transitioned by BellSouth pursuant to this Section shall be subject to a non-recurring switch-as-is charge as set forth in Exhibit A to Attachment 2 of the Agreement.

4.3.5 For Embedded Base UNE-P converted or transitioned, the applicable recurring tariff charges shall apply as of March 11, 2006. The transition of the Embedded Base should be performed in a manner that avoids, or otherwise, minimizes to the extent possible, disruption or degradation to Level 3's customers' service.

4.3.6 As of March 11, 2006, UNE-P was no longer required to be made available pursuant to this Agreement.

**5. Dedicated Transport and Dark Fiber Transport**

5.1 Dedicated Transport. Dedicated Transport is defined as BellSouth's transmission facilities between wire centers or switches owned by BellSouth, or between wire centers or switches owned by BellSouth and switches owned by Level 3, including but not limited to DS1, DS3 and OCn level services, as well as dark fiber, dedicated to Level 3. BellSouth shall not be required to provide access to OCn level Dedicated Transport under any circumstances pursuant to this Agreement. In addition, except as set forth in Section 5.2 below, BellSouth shall not be required to provide to Level 3 unbundled access to interoffice transmission facilities that do not connect a pair of wire centers or switches owned by BellSouth ("Entrance Facilities").

5.2 Transition for DS1 and DS3 Dedicated Transport Including DS1 and DS3 Entrance Facilities

5.2.1 For purposes of this Section 5.2, the Transition Period for the Embedded Base of DS1 and DS3 Dedicated Transport, Embedded Base Entrance Facilities and for Excess DS1 and DS3 Dedicated Transport, is the twelve (12) month period beginning March 11, 2005 and ending March 10, 2006.

5.2.2 For purposes of this Section 5.2, Embedded Base means DS1 and DS3 Dedicated Transport that were in service for Level 3 as of March 11, 2005 in those wire centers that, as of such date, met the criteria set forth in Sections 5.2.5.1 or 5.2.5.2 below.

5.2.3 For purposes of this Section 5.2, Embedded Base Entrance Facilities means Entrance Facilities that were in service for Level 3 as of March 11, 2005.

5.2.4 For purposes of this Section 5.2, Excess DS1 and DS3 Dedicated Transport means those Level 3 DS1 and DS3 Dedicated Transport facilities in service as of March 11, 2005, in excess of the caps set forth in Section 5.2.5.3.

5.2.5 Level 3 may obtain access to the following:

5.2.5.1 DS1 Transport except on routes connecting a pair of wire centers, where both wire centers contain at least four (4) fiber-based collocators or at least 38,000 Business access lines.

5.2.5.2 DS3 Transport except on routes connecting a pair of wire centers, each of which contains at least three (3) fiber-based collocators or at least 24,000 Business access lines.

5.2.5.3 Level 3 may obtain a maximum of twelve (12) unbundled DS3 Dedicated Transport circuits on each route where DS3 Dedicated Transport is available as a Network Element, and a maximum of ten (10) unbundled DS1 Dedicated Transport circuits on each Route where there is no 251(c)(3) unbundling obligation for DS3 Dedicated Transport but for which impairment exists for DS1 Dedicated Transport.

5.2.6 The Initial Unimpaired Wire Center List setting forth the wire centers meeting the criteria set forth in Sections 5.2.5.1 and 5.2.5.2 above is set forth in Carrier Notification Letter SN91086185, which is available on BellSouth's Interconnection Web site.

5.2.7 Transition Period Pricing. From March 11, 2005, through the completion of the Transition Period, BellSouth shall charge/collect a rate for Level 3's Embedded Base of DS1 and DS3 Dedicated Transport and for Level 3's Excess DS1 and DS3 Dedicated Transport, as described in this Section 5.2, equal to 115% of the rate paid for that element on June 15, 2004.

5.2.7.1 These rates shall be as set forth in Exhibit A to Attachment 2 of the Agreement and this Section 5.2.7.

5.2.7.2 From March 11, 2005, through the completion of the Transition Period, BellSouth shall charge/collect a rate for Level 3's Embedded Base Entrance Facilities as set forth in Exhibit A to Attachment 2 of the Agreement and this Section 5.2.7.

5.2.8 If Level 3 failed to submit the spreadsheet(s) identifying its Embedded Base DS1 and DS3 Dedicated Transport circuits, Embedded Base Entrance Facilities and Excess DS1 and DS3 Dedicated Transport on or before March 10, 2006, BellSouth will identify Level 3's remaining Embedded Base DS1 and DS3

Dedicated Transport circuits, Embedded Base Entrance Facilities and Excess DS1 and DS3 Dedicated Transport, if any, and will transition such circuits to the equivalent tariffed BellSouth service(s). Those circuits identified and transitioned by BellSouth shall be subject to a non-recurring switch-as-is charge as set forth in Exhibit A to Attachment 2 of the Agreement.

5.2.9 For Embedded Base DS1 and DS3 Dedicated Transport circuits, Embedded Base Entrance Facilities and Excess DS1 and DS3 Dedicated Transport converted or transitioned, the applicable recurring tariff charge shall apply to each circuit as of March 11, 2006. The transition of the Embedded Base DS1 and DS3 Dedicated Transport, Embedded Base Entrance Facilities and Excess DS1 and DS3 Dedicated Transport should be performed in a manner that avoids, or otherwise, minimizes to the extent possible, disruption or degradation to Level 3's customers' service.

5.3 Dark Fiber Transport. Dark Fiber Transport is defined as Dedicated Transport that consists of unactivated optical interoffice transmission facilities without attached signal regeneration, multiplexing, aggregation or other electronics. Except as set forth in Section 5.3.1 below, BellSouth shall not be required to provide access to Dark Fiber Transport Entrance Facilities pursuant to this Agreement.

5.3.1 Transition for Dark Fiber Transport and Dark Fiber Transport Entrance Facilities

5.3.2 For purposes of this Section 5.3, the Transition Period for the Embedded Base Dark Fiber Transport and Embedded Base Dark Fiber Entrance Facilities is the eighteen (18) month period beginning March 11, 2005 and ending September 10, 2006.

5.3.3 For purposes of this Section 5.3, Embedded Base means Dark Fiber Transport that was in service for Level 3 as of March 11, 2005 in those wire centers that, as of such date, met the criteria set forth in 5.3.5 below.

5.3.4 For purposes of this Section 5.3, Embedded Base Dark Fiber Entrance Facilities means Fiber Entrance Facilities that were in service for Level 3 as of March 11, 2005 in those wire centers that, as of such date, met the criteria set forth in 5.3.5 below.

5.3.5 Level 3 may obtain access to the following:

5.3.5.1 Dark Fiber Transport except on routes connecting a pair of wire centers, each of which contains at least three (3) fiber-based collocators or 24,000 Business access lines.

5.3.6 The Initial Unimpaired Wire Center List setting forth the wire centers meeting the criteria set forth in Sections 5.2.5.1 and 5.2.5.2 above is set forth in Carrier Notification Letter SN91086185, which is available on BellSouth's Interconnection Web site.

5.3.7 Transition Period Pricing. From March 11, 2005, through the completion of the

Transition Period, BellSouth shall charge/collect a rate for Level 3's Embedded Base of Dark Fiber and Embedded Base Dark Fiber Entrance Facilities equal to 115% of the rate paid for that element on June 15, 2004.

5.3.7.1 These rates shall be as set forth in Exhibit A to Attachment 2 of the Agreement and this Section 5.3.7.

5.3.8 No later than September 10, 2006 Level 3 shall submit spreadsheet(s) identifying all of the Embedded Base of Dark Fiber Transport and Dark Fiber Entrance Facilities to be either disconnected or converted to other BellSouth services as Conversions pursuant to Section 14. The Parties shall negotiate a project schedule for the Conversion of the Embedded Base of Dark Fiber Transport and Dark Fiber Entrance Facilities.

5.3.9 If Level 3 submits the spreadsheets specified in Section 5.3.8 for all of its Embedded Base of Dark Fiber Transport and Dark Fiber Entrance Facilities on or before September 10, 2006, Conversions shall be subject to Commission-approved switch-as-is charges.

5.3.10 If Level 3 fails to submit the spreadsheet(s) for all of its Embedded Base of Dark Fiber Transport and Dark Fiber Entrance Facilities prior to September 10, 2006, BellSouth will identify Level 3's remaining Embedded Base of Dark Fiber Transport and Dark Fiber Entrance Facilities, if any, and will transition such circuits to the equivalent tariffed BellSouth service(s) subject to a non-recurring switch-as-is charge as set forth in Exhibit A to Attachment 2 of the Agreement.

5.3.11 For Embedded Base of Dark Fiber Transport and Embedded Base Dark Fiber Entrance Facilities converted or transitioned, the applicable recurring tariff charge shall apply to each circuit as of September 11, 2006. The transition of the Embedded Base of Dark Fiber Transport and Embedded Base Dark Fiber Entrance Facilities should be performed in a manner that avoids, or otherwise, minimizes to the extent possible, disruption or degradation to Level 3's customers' service.

6. Prior to submitting an order pursuant to this Agreement for high capacity (DS1 or above) Dedicated Transport or high capacity Loops, Level 3 shall undertake a reasonably diligent inquiry to determine whether Level 3 is entitled to unbundled access to such Network Elements in accordance with the terms of this Agreement. By submitting any such order, Level 3 self-certifies that to the best of Level 3's knowledge, the high capacity Dedicated Transport or high capacity Loop requested is available as a Network Element pursuant to this Agreement. Upon receiving such order, BellSouth shall process the request in reliance upon Level 3's self-certification. To the extent BellSouth believes that such request does not comply with the terms of this Agreement, BellSouth shall seek dispute resolution in accordance with the General Terms and Conditions of this Agreement. If BellSouth prevails in such dispute resolution proceeding, Level 3 shall be liable to BellSouth for the difference between the rate for the equivalent BellSouth alternative arrangement and the self certified UNE. If it is determined that Level

3 submitted the order in bad faith, then BellSouth may charge interest on such rate differential.

7. BellSouth will not accept UNE orders for de-listed high capacity Loops or Dedicated Transport elements, as applicable, in the wire centers set forth on the Initial Unimpaired Wire Center List.

**Issue 4 –What is the appropriate language to implement BellSouth's obligation to provide Section 251 unbundled access to high-capacity loops and dedicated transport and how should the following terms be defined? (i) Business Line; (ii) Fiber-Based Collocator; (iii) Building (iv) route; (v) Is a CLEC entitled to obtain DS3 transport from a Tier 3 wire center to each of two or more Tier 1 or Tier 2 wire centers? (vi) is a CLEC entitled to obtain dark fiber transport from a Tier 3 wire center to each of two or more Tier 1 or Tier 2 wire centers?**

8. (i) Business Line

8.1 For purposes of this Attachment 2, a "Business Line" is, as defined in 47 C.F.R. § 51.5, and shall include all UNE Loop lines and digital access lines at full capacity.

8.2 (ii) Fiber-Based Collocation

8.2.1 For purposes of this Attachment 2 a "Fiber-Based Collocator" is, as defined in 47 C.F.R. § 51.5.

8.3 (iii) Building

8.3.1 For purposes of this Attachment 2, the definition of a "Building" is to be determined from a "reasonable person" perspective, but within the context of the telecommunications industry, taking into account the FCC's purpose and rationale behind its current rules.

8.4 (iv) Route

8.4.1 For purposes of this Attachment 2, a "Route" is, as defined in 47 C.F.R. §. 51.319(e).

**Issue 6 – Are HDSL–capable copper loops the equivalent of DS1 loops for the purpose of evaluating impairment?**

9. 2-wire or 4-wire HDSL-Compatible Loop. This is a designed Loop which meets Carrier Serving Area (CSA) specifications, may be up to 12,000 feet long and may have up to 2,500 feet of bridged tap (inclusive of Loop length). It may be a 2-wire or 4-wire circuit and will come standard with a test point, OC, and a DLR.

10. 4-wire Unbundled DS1 Digital Loop. This is a designed 4-wire Loop that is provisioned according to industry standards for DS1 or Primary Rate ISDN services and will come standard with a test point, OC, and a DLR. A DS1 Loop may be provisioned over a variety of loop transmission technologies including copper, HDSL-based technology or fiber optic transport systems. It will include a 4-wire DS1 Network Interface at the End User's location. For purposes of this Agreement, including the transition of DS1 and DS3 Loops described in Section 1 above, DS1 Loops include 2-wire and 4-wire HDSL-Compatible Loops to which

the necessary electronics have been added to provide service speeds of 1.544 megabytes per second.

**<u>Issue 10</u> – Transition of De-listed Network elements to Which No Specified Transition Period Applies. What rates terms and conditions should govern the transition of existing network elements that BellSouth is no longer obligated to provide as Section 251 UNEs to non-Section 251 network elements and other services and (a) what is the proper treatment for such network elements at the end of the transition period,; and (b) what is the appropriate transition period, and what are the appropriate rates, terms and conditions during such transition period, for unbundled high-capacity loops, high capacity transport, and dark fiber transport in and between wire centers that do not meet the FCC's non-impairment standards at this time, but that meet such standards in the future?**

11. Except to the extent expressly provided otherwise in this Attachment, Level 3 may not maintain unbundled network elements or combinations of unbundled network elements, that are no longer offered pursuant to this Amendment (collectively "Arrangements"). In the event BellSouth determines that Level 3 has in place any Arrangements after the Effective Date of this Amendment, BellSouth will provide Level 3 with written notice identifying the specific Arrangement(s) which must be converted or disconnected. Level 3 shall have thirty (30) days from the date of the notice to submit orders to disconnect or convert the Arrangements. Those circuits to be converted to other BellSouth services shall be subject to nonrecurring charges associated with that conversion. If Level 3 disputes BellSouth's identification of Arrangement(s) to be disconnected or converted, Level 3 shall send written notice of its dispute within thirty (30) days of Bellsouth's notice. Bellsouth shall not disconnect the disputed Arrangement(s) while the dispute is being resolved. If the Parties are unable to reach a voluntary resolution of the dispute, they may petition the Commission for assistance. If Level 3 does not dispute BellSouth's claims or fails to submit orders to disconnect or convert such Arrangements within the established thirty (30)day period, BellSouth will transition such circuits to the equivalent tariffed BellSouth service(s) subject to the full nonrecurring charges for installation of the equivalent tariffed BellSouth services(s) as set forth in Bellsouth's tariffs. The applicable recurring tariff charges shall apply to each circuit upon conversion.

**<u>Issue 5</u> – a) Does the Commission have the authority to determine whether or not BellSouth's application of the FCC's Section 251 non-impairment criteria for high-capacity loops and transport is appropriate?**

**b) What procedures should be used to identify those wire centers that satisfy the FCC's Section 251 non-impairment criteria for high-capacity loops and transport?**
**c) What language should be included in agreements to reflect the procedures identified in (b)?**

12. <u>Modifications and Updates to the Wire Center List and Subsequent Transition Periods</u>

12.1 DS1 or DS3 loops, or Dedicated Transport in Wire Centers that Meet the TRRO Unimpaired Criteria in the Future

12.2 The Parties acknowledge that the Commission is currently establishing a process by which future wire center designations will be handled, including approval by the Commission (the "Wire Center Designation Process"). The Parties agree that once the Wire Center Designation Process is approved by the Commission, unless the Commission orders otherwise, the Parties shall amend the Agreement to incorporate the new Wire Center Designation Process and it shall apply and be effective between the Parties for the state of Louisiana only, as of the effective date established by the Commission, or as otherwise set forth in the amendment incorporating the Wire Center Designation Process. Until such Wire Center Designation Process is approved by the Commission, the procedures that shall apply to BellSouth's future unimpaired wire center designations shall be governed by the process set forth in Section 12.3 below.

12.3 In the event BellSouth identifies additional wire centers that meet the criteria set forth in Sections 1.4.1 (DS1 loops), 1.4.2 (DS3 loops), 5.2.5.1 (DS1 transport) and 5.2.5.2 (DS3 transport) but that were not included in the Initial unimpaired Wire Center List adopted by the Commission, BellSouth shall include such additional wire centers in a carrier notification letter (CNL). Each such list of additional wire centers shall be considered a "Subsequent Wire Center List." Level 3 shall have thirty (30) days to dispute the additional wire centers listed on BellSouth's CNL.

12.3.1 Unless otherwise ordered by the Commission, effective thirty (30) business days after the date of a BellSouth CNL providing a Subsequent Wire Center List, BellSouth shall not be required to unbundle DS1 and/or DS3 Loops or DS1 and/or DS3 Transport, as applicable, in such additional wire center(s).

12.3.2 BellSouth shall make available DS1 and DS3 Loops and Transport that were in service for Level 3 in a wire center on the Subsequent Wire Center List as of the tenth ($10^{th}$) business day after the date of BellSouth's CNL identifying the Subsequent Wire Center List (Subsequent Embedded Base) until ninety (90) days after the tenth (10th) business day from the date of BellSouth's CNL identifying the Subsequent Wire Center List (Subsequent Transition Period).

12.3.3 Subsequent disconnects or loss of customers shall be removed from the Subsequent Embedded Base.

12.3.4 The rates that shall apply to the Subsequent Embedded Base during the Subsequent Transition Period shall be as set forth in Sections 1.6 (DS1 and DS3 loops), 5.2.7 (DS1 and DS3 Transport).

12.3.5 No later than forty (40) days from BellSouth's CNL identifying the Subsequent Wire Center List, Level 3 shall submit a spreadsheet(s) identifying the Subsequent Embedded Base of circuits to be disconnected or converted to other BellSouth services. The Parties shall negotiate a project schedule for the Conversion of the Subsequent Embedded Base.

12.3.5.1 If Level 3 fails to submit the spreadsheet(s) specified in Section 12.3.5 above for all of its Subsequent Embedded Base within forty (40) days after the date of BellSouth's CNL identifying the Subsequent Wire Center List, BellSouth will identify Level 3's remaining Subsequent Embedded Base, if any, and will transition such circuits to the equivalent tariffed BellSouth service(s). Those circuits identified and transitioned by BellSouth shall be subject to a non-recurring switch-as-is charge as set forth in Exhibit A to Attachment 2 of the Agreement.

12.3.5.2 For Subsequent Embedded Base circuits converted pursuant to Section 12.3.5 above or transitioned pursuant to Section 12.3.5.1 above, the applicable recurring tariff charges shall apply as of the earlier of the date each circuit is converted or transitioned, as applicable, or the first day after the end of the Subsequent Transition Period.

12.3.6 Dark Fiber Transport in Wire Centers that Meet the TRRO Unimpaired Criteria in the Future

12.3.6.1 In the event BellSouth identifies additional wire centers that meet the criteria set forth in Section 5.3.5 above, but that were not included in the Initial unimpaired Wire Center List adopted by the Commission, BellSouth shall include such additional wire centers in a CNL. Each such list of additional wire centers shall be considered a "Subsequent Wire Center List."

12.3.6.2 Effective thirty (30) business days after the date of a BellSouth CNL providing a Subsequent Wire Center List, BellSouth shall not be required to unbundle Dark Fiber Transport, as applicable, in such additional wire center(s).

12.3.6.3 BellSouth shall make available Dark Fiber Transport that were in service for Level 3 in a wire center on the Subsequent Wire Center List as of the tenth ($10^{th}$) business day after the date of BellSouth's CNL identifying the Subsequent Wire Center List (Subsequent Embedded Base) until ninety (90) days after the tenth (10th) business day from the date of BellSouth's CNL identifying the Subsequent Wire Center List (Subsequent Transition Period).

12.3.6.4 Subsequent disconnects or loss of customers shall be removed from the Subsequent Embedded Base.

12.3.6.5 The rates that shall apply to the Subsequent Embedded Base during the Subsequent Transition Period shall be as set forth in Section 5.2.7 (Dark Fiber Transport).

12.3.6.6 No later than forty (40) days from BellSouth's CNL identifying the Subsequent Wire Center List, Level 3 shall submit a spreadsheet(s) identifying the Subsequent Embedded Base of circuits to be disconnected or converted to other BellSouth services. The Parties shall negotiate a project schedule for the Conversion of the Subsequent Embedded Base.

12.3.6.6.1 If Level 3 fails to submit the spreadsheet(s) specified in Section 12.3.6.7 above for all of its Subsequent Embedded Base within forty (40) days after the date of

BellSouth's CNL identifying the Subsequent Wire Center List, BellSouth will identify Level 3's remaining Subsequent Embedded Base, if any, and will transition such circuits to the equivalent tariffed BellSouth service(s). Those circuits identified and transitioned by BellSouth shall be subject to a nonrecurring switch-as-is charge as set forth in Exhibit A to Attachment 2 of the Agreement.

12.3.6.6.2 For Subsequent Embedded Base circuits converted pursuant to Section 12.3.6.7 above or transitioned pursuant to Section 12.3.6.7.1 above, the applicable recurring tariff charges shall apply as of the earlier of the date each circuit is converted or transitioned, as applicable, or the first day after the end of the Subsequent Transition Period.

12.3.6.7 In the event that (1) BellSouth designates a wire center as unimpaired, (2) Level 3 converts existing UNEs to other services or orders new services as services other than UNEs, (3) Level 3 otherwise would have been entitled to UNEs in such wire center at the time alternative services provisioned, and (4) BellSouth acknowledges or a state or federal agency regulatory body with authority determines that, at the time BellSouth designated such wire center as unimpaired, such wire center did not meet the FCC's unimpairment criteria, then upon request of Level 3, BellSouth shall transition to UNEs any alternative services in such wire center that were established after such wire center was designated as unimpaired. In such instances, BellSouth shall refund Level 3 the difference between the rate paid by Level 3 for such services and the applicable UNE rate, including but not limited to any charges associated with the unnecessary conversion from UNE to other wholesale services.

**Issue 14 – What is the scope of commingling allowed under the FCC's rules and orders and what language should be included in Interconnection Agreements to implement commingling (including rates)?**

13. Commingling of Services

13.1 Commingling means the connecting, attaching, or otherwise linking of a Network Element, or a Combination, to one or more Telecommunications Services or facilities that Level 3 has obtained at wholesale from BellSouth, or the combining of a Network Element or Combination with one or more such wholesale Telecommunications Services or facilities. The wholesale services that can be commingled with Network Elements or a Combination include network elements required to be unbundled under Section 271. However, BellSouth will not commingle Section 271 elements with Network Elements or Combinations pursuant to this Agreement.

13.2 Subject to the limitations set forth elsewhere in this Attachment, BellSouth shall not deny access to a Network Element or a Combination on the grounds that one or more of the elements: 1) is connected to, attached to, linked to, or combined with such a facility or service obtained from BellSouth; or 2) shares part of BellSouth's network with access services or inputs for mobile wireless services and/or interexchange services.

13.3 Unless expressly prohibited by the terms of this Attachment, BellSouth shall permit Level 3 to Commingle an Unbundled Network Element or a Combination of unbundled Network Elements with wholesale services obtained from BellSouth, services obtained from third parties or facilities provided by Level 3. For purposes of example only, Level 3 may Commingle unbundled Network Elements or Combinations of unbundled Network Elements with wholesale services including switched and special access services, or services purchased under resale arrangements with BellSouth.

13.4 Unless otherwise agreed to by the Parties, the Network Element portion of a commingled circuit will be billed at the rates set forth in Exhibit B and the remainder of the circuit or service will be billed in accordance with BellSouth's tariffed rates or rates set forth by separate agreement.

13.5 When multiplexing equipment is attached to a commingled arrangement, the multiplexing equipment will be billed from the same agreement or the tariff as the higher bandwidth circuit. Central Office Channel Interfaces (COCI) will be billed from the same agreement or tariff as the lower bandwidth circuit.

13.6 Terms and conditions for order cancellation charges and Service Date Advancement Charges will apply in accordance with Attachment 2. The charges shall be as se forth in Exhibit A to Attachment 2 of the Parties Agreement.

**<u>Issue 15</u> – Is BellSouth required to provide conversion of special access circuits to UNE pricing, and, if so, what rates, terms and conditions and during what timeframe should such new requests for such conversions be effectuated?**

14. Conversion of Wholesale Services to Network Elements or Network Elements to Wholesale Services

14.1 Upon request, BellSouth shall convert a wholesale service, or group of wholesale services, to the equivalent Network Element or Combination that is available to Level 3 pursuant to Section 251 of the Act and under this Agreement, or convert a Network Element or Combination that is available to Level 3 pursuant to Section 251 of the Act and under this Agreement to an equivalent wholesale service or group of wholesale services offered by BellSouth (collectively "Conversion"). BellSouth shall charge the applicable nonrecurring switch-as-is rates for Conversions to specific Network Elements or Combinations found in Exhibit B. BellSouth shall also charge the same nonrecurring switch-as-is rates when converting from Network Elements or Combinations. Any rate change resulting from the Conversion will be effective as of the next billing cycle following BellSouth's receipt of a complete and accurate Conversion request from Level 3. Any change from a wholesale service/group of wholesale services to a Network Element/Combination, or from a Network Element/Combination to a wholesale service/group of wholesale services that requires a physical rearrangement will not be considered to be a Conversion for purposes of this Agreement. BellSouth

will not require physical rearrangements if the Conversion can be completed through record changes only. Orders for Conversions will be handled in accordance with the guidelines set forth in the Ordering Guidelines and Processes and CLEC Information Packages.

14.2 Any outstanding conversions shall be effective on or after the effective date of this Agreement.

**Issue 19 - LINE SPLITTING: What is the appropriate ICA language to implement BellSouth's obligations with regard to line splitting?**

15. Line Splitting

15.1 Line splitting shall mean that Level 3 purchases a whole Loop and provides the splitter to provide voice and data services through an arrangement with a third party CLEC, who is either the provider of data services (a Data LEC) or the provider of voice services (a Voice CLEC) to deliver voice and data service to End Users over the same Loop. The Voice CLEC and Data LEC may be the same or different carriers.

15.2 Line Splitting – UNE-L. In the eventLevel 3 provides its own switching or obtains switching from a third party, Level 3 may engage in line splitting arrangements with another CLEC using a splitter, provided by Level 3, in a Collocation Space at the central office where the Loop terminates into a distribution frame or its equivalent.

15.2.1 Provisioning Line Splitting and Splitter Space – UNE-L

15.2.1.1 Level 3 provides the splitter when providing Line Splitting with UNE-L. When Level 3 or its authorized agent owns the splitter, Line Splitting requires the following: a loop from NID at the End User's location to the serving wire center and terminating into a distribution frame or its equivalent.

15.2.1.2 An unloaded 2-wire copper Loop must serve the customer. The meet point for the Voice CLEC and the Data LEC is the point of termination on the MDF for the Data LEC's cable and pairs.

15.3 To order Line Splitting utilizing UNE-L, Level 3 or its authorized agent must have a DSLAM collocated in the central office that serves the End User of such Loop.

15.3.1 Level 3 or its authorized agent may purchase, install and maintain central office POTS splitters in its collocation arrangements. Level 3 or its authorized agent may use such splitters for access to its customers and to provide digital line subscriber services to its customers using the high frequency spectrum of the UNE-L. Existing Collocation rules and procedures and the terms and conditions relating to Collocation set forth in Attachment 4 Central Office shall apply.

15.3.2 Any splitters installed by Level 3 in its collocation arrangement shall comply with ANSI T1.413, Annex E, or any future ANSI splitter Standards. Level 3 may install any splitters that BellSouth deploys or permits to be deployed for itself or

any BellSouth affiliate.

15.4 Maintenance – Line Splitting – UNE-L

15.4.1 BellSouth will be responsible for repairing voice troubles and the troubles with the physical loop between the NID at the End User's premises and the termination point.

15.5 Indemnification

15.5.1 Level 3 shall indemnify, defend and hold harmless BellSouth from and against any claims, losses, and costs which arise out of actions related to the other service provider (i.e. CLEC party to the line splitting arrangement who is not Level 3), except to the extent caused by BellSouth's gross negligence or willful misconduct.

**Issue 22 – What is the appropriate ICA language, if any, to address call related databases?**

16. Call Related Databases and Signaling

16.1 Call Related Databases are the databases other than OSS, that are used in signaling networks, for billing and collection, or the transmission, routing or other provision of a Telecommunication Service. Notwithstanding anything to the contrary herein, BellSouth shall not provide unbundled access to call related databases and signaling including but not limited to, BellSouth Switched Access 8XX Toll Free Dialing Ten Digit Screening Service, LIDB, Signaling, Signaling Link Transport, STP, SS7 AIN Access, Service Control Point(SCP\Databases, Local Number Portability (LNP) Databases and Calling Name (CNAM) Database Service pursuant to this Agreement.

17. 911 and E911 Databases

17.1 BellSouth shall provide Level 3 with nondiscriminatory access to 911 and E911 databases on an unbundled basis, in accordance with 47 C.F.R. § 51.319 (f).

17.2 The ALI/DMS database contains End User information (including name, address, telephone information, and sometimes special information from the local service provider or End User) used to determine to which PSAP to route the call. The ALI/DMS database is used to provide enhanced routing flexibility for E911. Level 3 will be required to provide the BellSouth 911 database vendor daily service order updates to E911 database in accordance with Section 17.3.1 below.

17.3 Technical Requirements

17.3.1 BellSouth's 911 database vendor shall provide Level 3 the capability of providing updates to the ALI/DMS database through a specified electronic interface. Level 3 shall contact BellSouth's 911 database vendor directly to request interface. Level 3 shall provide updates directly to BellSouth's 911 database vendor on a daily basis. Updates shall be the responsibility of Level 3 and BellSouth shall not be liable for the transactions between Level 3 and BellSouth's 911 database vendor.

17.3.2 It is Level 3's responsibility to retrieve and confirm statistical data and to correct

errors obtained from BellSouth's 911 database vendor on a daily basis. All errors will be assigned a unique error code and the description of the error and the corrective action is described in the CLEC Users Guide for Facility Based Providers that is found on the BellSouth Interconnection Web site.

17.3.3 Level 3 shall conform to the BellSouth standards as described in the CLEC Users Guide to E911 for Facilities Based Providers that is located on the BellSouth's Interconnection Web site.

17.3.4 Stranded Unlocks are defined as End User records in BellSouth's ALI/DMS database that have not been migrated for over ninety (90) days to Level 3, as a new provider of local service to the End User. Stranded Unlocks are those End User records that have been "unlocked" by the previous local exchange carrier that provided service to the End User and are open for Level 3 to assume responsibility for such records.

17.3.5 Based upon End User record ownership information available in the NPAC database, BellSouth shall provide a Stranded Unlock annual report to Level 3 that reflects all Stranded Unlocks that remain in the ALI/DMS database for over ninety (90) days. Level 3 shall review the Stranded Unlock report, identify its End User records and request to either delete such records or migrate the records to Level 3 within two (2) months following the date of the Stranded Unlock report provided by BellSouth. Level 3 shall reimburse BellSouth for any charges BellSouth's database vendor imposes on BellSouth for the deletion of Level 3's records.

17.4 911 PBX Locate Service®. 911 PBX Locate Service is comprised of a database capability and a separate transport component.

17.5 Description of Product. The transport component provides a dedicated trunk path from a Private Branch Exchange (PBX) switch to the appropriate BellSouth 911 tandem.

17.6 The database capability allows Level 3 to offer an E911 service to its PBX End Users that identifies to the PSAP the physical location of the Level 3 PBX 911 End User station telephone number for the 911 call that is placed by the End User.

17.7 Level 3 may order either the database capability or the transport component as desired or Level 3 may order both components of the service.

17.8 911 PBX Locate Database Capability. Level 3's End User or Level 3's End User's database management agent (DMA) must provide the End User PBX station telephone numbers and corresponding address and location data to BellSouth's 911 database vendor. The data will be loaded and maintained in BellSouth's ALI database.

17.9 Ordering, provisioning, testing and maintenance shall be provided by Level 3 pursuant to the 911 PBX Locate Marketing Service Description (MSD) that is located on the BellSouth Interconnection Web site.

17.10 Level 3's End User, or Level 3's End User database management agent must provide ongoing updates to BellSouth's 911 database vendor within a commercially reasonable timeframe of all PBX station telephone number adds, moves and deletions. It will be the responsibility of Level 3 to ensure that the End User or DMA maintain the data pertaining to each End User's extension managed by the 911 PBX Locate Service product. Level 3 should not submit telephone number updates for specific PBX station telephone numbers that are submitted by Level 3's End User, or Level 3's End User DMA under the terms of 911 PBX Locate product.

17.11 Level 3 must provision all PBX station numbers in the same LATA as the E911 tandem.

17.12 Level 3 agrees to release, indemnify, defend and hold harmless BellSouth from any and all loss, claims, demands, suits, or other action, or any liability whatsoever, whether suffered, made, instituted or asserted by Level 3's End User or by any other party or person, for any personal injury to or death of any person or persons, or for any loss, damage or destruction of any property, whether owned by Level 3 or others, or for any infringement or invasion of the right of privacy of any person or persons, caused or claimed to have been caused, directly or indirectly, by the installation, operation, failure to operate, maintenance, removal, presence, condition, location or use of PBX Locate Service features or by any services which are or may be furnished by BellSouth in connection therewith, including but not limited to the identification of the telephone number, address or name associated with the telephone used by the party or parties accessing 911 services using 911 PBX Locate Service hereunder, except to the extent caused by BellSouth's gross negligence or willful misconduct. Level 3 is responsible for assuring that its authorized End Users comply with the provisions of these terms and that unauthorized persons do not gain access to or use the 911 PBX Locate Service through user names, passwords, or other identifiers assigned to Level 3's End User or DMA pursuant to these terms. Specifically, Level 3's End User or DMA must keep and protect from use by any unauthorized individual identifiers, passwords, and any other security token(s) and devices that are provided for access to this product.

17.13 Level 3 may only use BellSouth PBX Locate Service solely for the purpose of validating and correcting 911 related data for Level 3's End Users' telephone numbers for which it has direct management authority.

17.14 911 PBX Locate Transport Component. The 911 PBX Locate Service transport component requires Level 3 to order a CAMA type dedicated trunk from Level 3's End User premise to the appropriate BellSouth 911 tandem pursuant to the following provisions.

17.15 Except as otherwise set forth below, a minimum of two (2) End User specific, dedicated 911 trunks are required between the Level 3's End User premise and the BellSouth 911 tandem as described in BellSouth's Technical Reference (TR) 73576 and in accordance with the 911 PBX Locate Marketing Service Description

located on the BellSouth Interconnection Web site. Level 3 is responsible for connectivity between the End User's PBX and Level 3's switch or POP location. Level 3 will then order 911 trunks from their switch or POP location to the BellSouth 911 tandem. The dedicated trunks shall be, at a minimum, DS0 level trunks configured as part of a digital interface (delivered over a Level 3 purchased DS1 facility that hands off at a DS1 or higher level digital or optical interface). Level 3 is responsible for ensuring that the PBX switch is capable of sending the calling station's Direct Inward Dial (DID) telephone number to the BellSouth 911 tandem in a specified Multi-frequency (MF) Address Signaling Protocol. If the PBX switch supports Primary Rate ISDN (PRI) and the calling stations are DID numbers, then the 911 call can be transmitted using PRI, and there will be no requirement for the PBX Locate Transport component.

17.16 Ordering and Provisioning. Level 3 will submit an Access Service Request (ASR) to BellSouth to order a minimum of two (2) End User specific 911 trunks from its switch or POP location to the BellSouth 911 tandem.

17.17 Testing and maintenance shall be provided by Level 3 pursuant to the 911 PBX Locate Marketing Service description that is located on the BellSouth Interconnection Web site.

17.18 Rates. Rates for the 911 PBX Locate Service database component are set forth in Exhibit C. Trunks and facilities for 911 PBX Locate transport component may be ordered by Level 3 pursuant to the terms and conditions set forth in Attachment 3 of the Agreement.

**Issue 23 - What is the appropriate language to implement BellSouth's obligation, if any, to offer unbundled access to newly deployed or "greenfield" fiber loops, including fiber loops deployed to the minimum point of entry (MPOE) of a multiple dwelling unit that is predominantly residential and what, if any impact does the ownership of the inside wiring from the MPOE to each end user have one this obligation?**

**Issue 28: What is the appropriate language, if any, to address access to overbuild deployments of fiber to the home and fiber to the curb facilities?**

18. Fiber to the Home (FTTH) loops are local loops consisting entirely of fiber optic cable, whether dark or lit, serving an customer's premises or, in the case of predominantly residential multiple dwelling units (MDUs), a fiber optic cable, whether dark or lit, that extends to the MDU minimum point of entry (MPOE).

19. Fiber to the Curb (FTTC) loops are local loops consisting of fiber optic cable connecting to a copper distribution plant that is not more than five hundred (500) feet from the customer's premises or, in the case of predominantly residential MDUs, not more than five hundred (500) feet from the MDU's MPOE. The fiber optic cable in a FTTC loop must connect to a copper distribution plant at a serving area interface from which every other copper distribution subloop also is not more than five hundred (500) feet from the respective customer's premises.

20. Greenfield Requirements: In new build (Greenfield) areas, where BellSouth has only deployed FTTH/FTTC facilities, BellSouth is under no obligation to provide such FTTH and FTTC Loops. FTTH facilities include fiber loops deployed to the MPOE of a MDU that is predominately residential regardless of the ownership of the inside wiring from the MPOE to each customer's in the MDU.

20.1 Overbuild Requirements: In FTTH/FTTC overbuild situations where Bellsouth also has copper loops, BellSouth will make those copper loops available to CLEC on an unbundled basis, until such time as BellSouth chooses to retire those copper Loops using the FCC's network disclosure requirements. In these cases, BellSouth will offer a 64 Kbps second voice grade channel over its FTTH/FTTC facilities. BellSouth's retirement of copper loops must comply with Applicable Law.

20.2 DS1/DS3 Requirements: Notwithstanding the above, nothing in this Section shall limit BellSouth's obligation to offer CLECs unbundled DS1 and DS3 loops (or loop/transport combination) in any wire center where BellSouth is required to provide such loop facilities.

**Issue 24 - What is the appropriate ICA language to implement BellSouth's obligation to provide unbundled access to hybrid loops?**

21. Hybrid loops are defined in the federal rules at 47 CFR §51.319(a)(2) as local loops, composed of both fiber optic cable, usually in the feeder plant, and copper twisted wire or cable, usually in the distribution plant. BellSouth shall provide Level 3with nondiscriminatory access to the time division multiplexing features, functions and capabilities of such hybrid loop, on an unbundled basis to establish a complete transmission path between BellSouth's central office and an customer's premises, but BellSouth is not required to provide access to the packet switched features, functions and capabilities of its hybrid loops.

22. Routine Network Modifications

22.1 BellSouth will perform Routine Network Modifications (RNM) in accordance with FCC 47 CFR 51.319 (a)(7) and (e)(4) for Loops and Dedicated Transport provided under this Attachment. If BellSouth has anticipated such RNM and performs them during normal operations and has recovered the costs for performing such modifications through the rates set forth in Exhibit A to Attachment 2 of the Agreement, then BellSouth will perform such RNM at no additional charge.

22.2 RNM shall be performed within the intervals established for the Network Element and subject to the performance measurements and associated remedies set forth in Attachment 9 to the extent such RNM were anticipated in the setting of such intervals. If BellSouth has not anticipated a requested network modification as being an RNM and has not recovered the costs of such RNM in the rates set forth in Exhibit A, then such request will be handled as a project on an individual case

basis. BellSouth will provide a price quote for the request and, upon receipt of payment from Level 3, BellSouth will perform the RNM.

22.3 To the extent BellSouth claims that any charge is due for any requested RNM and Level 3 disputes such charge, BellSouth will file a rate application and supporting documentation with the Commission for approval.

23. Line Conditioning

23.1 Definition: Line Conditioning is defined as the removal from a copper Loop or copper Subloop of any device that could diminish the capability of the Loop or Subloop to deliver high-speed switched wireline telecommunications capability, including digital subscriber line service. Such devices include, but are not limited to, bridges taps, load coils, low pass filters, and range extenders.

23.2 BellSouth will remove load coils only on copper Loops and Subloops that are less than eighteen thousand (18,000) feet in length.

23.3 Any copper loop being ordered by Level 3 which has over 6,000 feet of combined bridged tap will be modified, upon request from Level 3, so that the loop will have a maximum of 6,000 feet of bridged tap. This modification will be performed at no additional charge to Level 3. Line conditioning orders that require the removal of other bridged tap that serves no network design purpose on a copper Loop that will result in a combined total of bridged tap between two thousand five hundred (2,500) and six thousand (6,000) feet will be performed at the rates set forth in Exhibit A to Attachment 2 of the Agreement.

23.4 Level 3 may request removal of any unnecessary and non excessive bridged tap (bridged tap between zero (0) and two thousand five hundred (2,500) feet which serves no network design purpose), at rates pursuant to BellSouth's SC Process as mutually agreed to by the Parties.

23.5 Rates for Unbundled Loop Modification (ULM) are as set forth in Exhibit A to Attachment 2 of the Agreement.

23.6 BellSouth will not modify a Loop in such a way that it no longer meets the technical parameters of the original Loop type (e.g., voice grade, ADSL, etc.) being ordered

23.7 If Level 3 requests ULM on a reserved facility for a new Loop order, BellSouth may perform a pair change and provision a different Loop facility in lieu of the reserved facility with ULM if feasible. The Loop provisioned will meet or exceed specifications of the requested Loop facility as modified. Level 3 will not be charged for ULM if a different Loop is provisioned. For Loops that require a DLR or its equivalent, BellSouth will provide LMU detail of the Loop provisioned.

23.8 Level 3 will request Loop make up information pursuant to this Attachment prior to submitting a service inquiry and/or a LSR for the Loop type that Level 3 desires BellSouth to condition.

23.9 When requesting ULM for a Loop that BellSouth has previously provisioned for Level 3, Level 3 will submit a SI to BellSouth. If a spare Loop facility that meets the Loop modification specifications requested by Level 3 is available at the location for which the ULM was requested, Level 3 will have the option to change the Loop facility to the qualifying spare facility rather than to provide ULM. In the event that BellSouth changes the Loop facility in lieu of providing ULM, Level 3 will not be charged for ULM but will only be charged the service order charges for submitting an order.

**Issue 29 - What is the appropriate ICA language to implement BellSouth's EEL audit rights, if any, under the TRO?**

24. EELs Audit provisions

24.1 BellSouth may, on an annual basis audit Level 3's records based on cause, in order to verify compliance with the high capacity EEL eligibility criteria. To invoke its limited right to audit, BellSouth shall send a written Notice of Audit to Level 3stating its concern that Level 3 is not complying with the service eligibility requirements. Such Notice of Audit will be delivered to Level 3 no less than thirty (30) calendar days prior to the date upon which BellSouth seeks to commence an audit and shall include a listing of the circuits for which BellSouth alleges noncompliance, including all supporting documentation and a list of three auditors from which Level 3 may choose one to conduct the audit.

24.2 The auditor selected shall be an independent third party retained and paid for by BellSouth. The audit must be performed in accordance with the standards established by the American Institute for Certified Public Accountants (AICPA) which will require the auditor to perform an "examination engagement" and issue an opinion regarding Level 3's compliance with the high capacity EEL eligibility criteria. AICPA standards and other AICPA requirements will be used to determine the independence of an auditor. The independent auditor's report will conclude whether Level 3 complied in all material respects with the applicable service eligibility criteria. Consistent with standard auditing practices, such audits require compliance testing designed by the independent auditor.

24.3 To the extent the independent auditor's report concludes that Level 3 failed to comply with the service eligibility criteria, Level 3 must true-up any difference in payments, convert all noncompliant circuits to the appropriate service, and make the correct payments on a going forward basis.

24.4 To the extent the independent auditor's report concludes that Level 3 failed to comply in all material respects with the service eligibility criteria, Level 3 shall reimburse BellSouth for the cost of the independent auditor. To the extent the independent auditor's report concludes that Level 3 did comply in all material respects with the service eligibility criteria, BellSouth will reimburse Level 3 for its reasonable and demonstrable costs associated with the audit. Level 3 will maintain appropriate documentation to support its certifications.

25. Level 3 shall not obtain a Network Element for the exclusive provision of mobile wireless services or interexchange services.

26. Facilities that do not terminate at a demarcation point at an End User premises, including, by way of example, but not limited to, facilities that terminate to another carrier's switch or premises, a cell site, Mobile Switching Center or base station, do not constitute local Loops under Section 251, except to the extent that Level 3 may require Loops to such locations for the purpose of providing telecommunications services to its personnel at those locations.

27. Subloop Elements.

27.1 Where facilities permit, BellSouth shall offer access to its Unbundled Subloop (USL) elements as specified herein.

27.2 Unbundled Subloop Distribution (USLD)

27.2.1 The USLD facility is a dedicated transmission facility that BellSouth provides from an End User's point of demarcation to a BellSouth cross-connect device. The BellSouth cross-connect device may be located within a remote terminal (RT) or a stand-alone cross-box in the field or in the equipment room of a building. The USLD media is a copper twisted pair that can be provisioned as a 2-wire or 4-wire facility. BellSouth will make available the following subloop distribution offerings where facilities exist:

USLD – Voice Grade (USLD-VG)
Unbundled Copper Subloop (UCSL)
USLD – Intrabuilding Network Cable (USLD-INC (aka riser cable))

27.2.2 USLD-VG is a copper subloop facility from the cross-box in the field up to and including the point of demarcation at the End User's premises and may have load coils.

27.2.3 UCSL is a copper facility eighteen thousand (18,000) feet or less in length provided from the cross-box in the field up to and including the End User's point of demarcation. If available, this facility will not have any intervening equipment such as load coils between the End User and the cross-box.

27.2.4 If Level 3 requests a UCSL and it is not available, Level 3 may request the copper Subloop facility be modified pursuant to the ULM process to remove load coils and/or excessive bridged taps. If load coils and/or excessive bridged taps are removed, the facility will be classified as a UCSL.

27.2.5 USLD-INC is the distribution facility owned or controlled by BellSouth inside a building or between buildings on the same property that is not separated by a public street or road. USLD-INC includes the facility from the cross-connect device in the building equipment room up to and including the point of demarcation at the End User's premises.

27.2.6 Upon request for USLD-INC from Level 3, BellSouth will install a cross-connect panel in the building equipment room for the purpose of accessing USLD-INC pairs from a building equipment room. The cross-connect panel will function as a single point of interconnection (SPOI) for USLD-INC and will be accessible by multiple carriers as space permits. BellSouth will place cross-connect blocks in twenty five (25) pair increments for Level 3's use on this cross-connect panel. Level 3 will be responsible for connecting its facilities to the twenty five (25) pair cross-connect block(s).

27.2.7 For access to Voice Grade USLD and UCSL, Level 3 shall install a cable to the BellSouth cross-box pursuant to the terms and conditions for physical collocation for remote sites set forth in Attachment 4. This cable would be connected by a BellSouth technician within the BellSouth cross-box during the set-up process. Level 3's cable pairs can then be connected to BellSouth's USL within the BellSouth cross-box by the BellSouth technician.

27.2.8 Through the SI process, BellSouth will determine whether access to USLs at the location requested by Level 3 is technically feasible and whether sufficient capacity exists in the cross-box. If existing capacity is sufficient to meet Level 3's request, then BellSouth will perform the site set-up as described in the CLEC Information Package, located at BellSouth's Interconnection Web site: www.interconnection.bellsouth.com/products/html/unes.html.

27.2.9 The site set-up must be completed before Level 3 can order Subloop pairs. For the site set-up in a BellSouth cross-connect box in the field, BellSouth will perform the necessary work to splice Level 3's cable into the cross-connect box. For the site set-up inside a building equipment room, BellSouth will perform the necessary work to install the cross-connect panel and the connecting block(s) that will be used to provide access to the requested USLs.

27.2.10 Once the site set-up is complete, Level 3 will request Subloop pairs through submission of a LSR form to the LCSC. OC is required with USL pair provisioning when Level 3 requests reuse of an existing facility, and the OC charge shall be billed in addition to the USL pair rate. For expedite requests by Level 3 for Subloop pairs, expedite charges will apply for intervals less than five (5) days.

27.2.11 USLs will be provided in accordance with BellSouth's TR73600 Unbundled Local Loop Technical Specifications.

27.3 Unbundled Network Terminating Wire (UNTW)

27.3.1 UNTW is unshielded twisted copper wiring that is used to extend circuits from an intra-building network cable terminal or from a building entrance terminal to an individual End User's point of demarcation. It is the final portion of the Loop that in multi-subscriber configurations represents the point at which the network branches out to serve individual subscribers.

27.3.2 This element will be provided in MDUs and/or Multi-Tenants Units (MTUs)

where either Party owns wiring all the way to the End User's premises. Neither Party will provide this element in locations where the property owner provides its own wiring to the End User's premises, where a third party owns the wiring to the End User's premises.

27.3.3 Requirements

27.3.3.1 On a multi-unit premises, upon request of the other Party (Requesting Party), the Party owning the network terminating wire (Provisioning Party) will provide access to UNTW pairs on an Access Terminal that is suitable for use by multiple carriers at each Garden Terminal or Wiring Closet.

27.3.3.2 The Provisioning Party shall not be required to install new or additional NTW beyond existing NTW to provision the services of the Requesting Party.

27.3.3.3 In existing MDUs and/or MTUs in which BellSouth does not own or control wiring (INC/NTW) to the End Users premises, and Level 3 does own or control such wiring, Level 3 will install UNTW Access Terminals for BellSouth under the same terms and conditions as BellSouth provides UNTW Access Terminals to Level 3.

27.3.3.4 In situations in which BellSouth activates a UNTW pair, BellSouth will compensate Level 3 for each pair activated commensurate to the price specified in Level 3's Agreement.

27.3.3.5 Upon receipt of the UNTW SI requesting access to the Provisioning Party's UNTW pairs at a multi-unit premises, representatives of both Parties will participate in a meeting at the site of the requested access. The purpose of the site visit will include discussion of the procedures for installation and location of the Access Terminals. By request of the Requesting Party, an Access Terminal will be installed either adjacent to each of the Provisioning Party's Garden Terminal or inside each Wiring Closet. The Requesting Party will deliver and connect its central office facilities to the UNTW pairs within the Access Terminal. The Requesting Party may access any available pair on an Access Terminal. A pair is available when a pair is not being utilized to provide service or where the End User has requested a change in its local service provider to the Requesting Party. Prior to connecting the Requesting Party's service on a pair previously used by the Provisioning Party, the Requesting Party is responsible for ensuring the End User is no longer using the Provisioning Party's service or another CLEC's service before accessing UNTW pairs.

27.3.3.6 Access Terminal installation intervals will be established on an individual case basis.

27.3.3.7 The Requesting Party is responsible for obtaining the property owner's permission for the Provisioning Party to install an Access Terminal(s) on behalf of the Requesting Party. The submission of the SI by the Requesting Party will serve as certification by the Requesting Party that such permission has been obtained. If the property owner objects to Access Terminal installations that are in progress or

within thirty (30) days after completion and demands removal of Access Terminals, the Requesting Party will be responsible for costs associated with removing Access Terminals and restoring the property to its original state prior to Access Terminals being installed.

27.3.3.8 The Requesting Party shall indemnify and hold harmless the Provisioning Party against any claims of any kind that may arise out of the Requesting Party's failure to obtain the property owner's permission. The Requesting Party will be billed for nonrecurring and recurring charges for accessing UNTW pairs at the time the Requesting Party activates the pair(s). The Requesting Party will notify the Provisioning Party within five (5) business days of activating UNTW pairs using the LSR form.

27.3.3.9 If a trouble exists on a UNTW pair, the Requesting Party may use an alternate spare pair that serves that End User if a spare pair is available. In such cases, the Requesting Party will re-terminate its existing jumper from the defective pair to the spare pair. Alternatively, the Requesting Party will isolate and report troubles in the manner specified by the Provisioning Party. The Requesting Party must tag the UNTW pair that requires repair. If the Provisioning Party dispatches a technician on a reported trouble call and no UNTW trouble is found, the Provisioning Party will charge Requesting Party for time spent on the dispatch and testing the UNTW pair(s).

27.3.3.10 If the Requesting Party initiates the Access Terminal installation and the Requesting Party has not activated at least ten percent (10%) of the capacity of the Access Terminal installed pursuant to the Requesting Party's request for an Access Terminal within six (6) months of installation of the Access Terminal, the Provisioning Party will bill the Requesting Party a nonrecurring charge equal to the actual cost of provisioning the Access Terminal.

27.3.3.11 If the Provisioning Party determines that the Requesting Party is using the UNTW pairs without reporting the activation of the pairs, the Requesting Party will be billed for the use of that pair back to the date the End User began receiving service from the Requesting Party at that location. Upon request, the Requesting Party will provide copies of its billing record to substantiate such date. If the Requesting Party fails to provide such records, then the Provisioning Party will bill the Requesting Party back to the date of the Access Terminal installation.

| UNBUNDLED NETWORK ELEMENTS - Louisiana | | | | | | | | | | | | | | | Att: 1 Exh: B | | | |
|---|---|---|---|---|---|---|---|---|---|---|---|---|---|---|---|---|---|---|
| CATEGORY | | RATE ELEMENTS | Interim | Zone | BCS | USOC | RATES($) | | | | | Svc Order Submitted Elec per LSR | Svc Order Submitted Manually per LSR | Incremental Charge - Manual Svc Order vs. Electronic-1st | Incremental Charge - Manual Svc Order vs. Electronic-Add'l | Incremental Charge - Manual Svc Order vs. Electronic-Disc 1st | Incremental Charge - Manual Svc Order vs. Electronic-Disc Add'l |
| | | | | | | | Rec | Nonrecurring | | Nonrecurring Disconnect | | OSS Rates($) | | | | | |
| | | | | | | | | First | Add'l | First | Add'l | SOMEC | SOMAN | SOMAN | SOMAN | SOMAN | SOMAN |
| | The "Zone" shown in the sections for stand-alone loops or loops as part of a combination refers to Geographically Deaveraged UNE Zones. To view Geographically Deaveraged UNE Zone Designations by Central Office, refer to Internet Website: http://www.inter | | | | | | | | | | | | | | | | | |
| UNE LOOP COMMINGLING | | | | | | | | | | | | | | | | | | |
| | 2-WIRE ANALOG VOICE GRADE LOOP - COMMINGLING | | | | | | | | | | | | | | | | | |
| | | 2-Wire Analog Voice Grade Loop - Service Level 2 w/Loop or Ground Start Signaling - Zone 1 | | 1 | NTCVG | UEAL2 | 14.93 | 102.10 | 65.72 | | | | | | | | |
| | | 2-Wire Analog Voice Grade Loop - Service Level 2 w/Loop or Ground Start Signaling - Zone 2 | | 2 | NTCVG | UEAL2 | 25.35 | 102.10 | 65.72 | | | | | | | | |
| | | 2-Wire Analog Voice Grade Loop - Service Level 2 w/Loop or Ground Start Signaling - Zone 3 | | 3 | NTCVG | UEAL2 | 50.46 | 102.10 | 65.72 | | | | | | | | |
| | | 2-Wire Analog Voice Grade Loop - Service Level 2 w/Reverse Battery Signaling - Zone 1 | | 1 | NTCVG | UEAR2 | 14.93 | 102.10 | 65.72 | | | | | | | | |
| | | 2-Wire Analog Voice Grade Loop - Service Level 2 w/Reverse Battery Signaling - Zone 2 | | 2 | NTCVG | UEAR2 | 25.35 | 102.10 | 65.72 | | | | | | | | |
| | | 2-Wire Analog Voice Grade Loop - Service Level 2 w/Reverse Battery Signaling - Zone 3 | | 3 | NTCVG | UEAR2 | 50.46 | 102.10 | 65.72 | | | | | | | | |
| | | Unbundled Loop Service Rearrangement, change in loop facility, per circuit | | | NTCVG | UREWO | | 87.59 | 36.30 | | | | | | | | |
| | | Loop Tagging - Service Level 2 (SL2) | | | NTCVG | URETL | | 11.20 | 1.10 | | | | | | | | |
| | 4-WIRE ANALOG VOICE GRADE LOOP | | | | | | | | | | | | | | | | | |
| | | 4-Wire Analog Voice Grade Loop - Zone 1 | | 1 | NTCVG | UEAL4 | 30.81 | 127.40 | 91.02 | | | | | | | | |
| | | 4-Wire Analog Voice Grade Loop - Zone 2 | | 2 | NTCVG | UEAL4 | 38.32 | 127.40 | 91.02 | | | | | | | | |
| | | 4-Wire Analog Voice Grade Loop - Zone 3 | | 3 | NTCVG | UEAL4 | 60.39 | 127.40 | 91.02 | | | | | | | | |
| | | Switch-As-Is Conversion rate per UNE Loop, Single LSR, (per DS0) | | | NTCVG | URESL | | 24.98 | 3.52 | | | | | | | | |
| | | Unbundled Loop Service Rearrangement, change in loop facility, per circuit | | | NTCVG | UREWO | | 87.59 | 36.30 | | | | | | | | |
| | 4-WIRE DS1 DIGITAL LOOP | | | | | | | | | | | | | | | | | |
| | | 4-Wire DS1 Digital Loop - Zone 1 | | 1 | NTCD1 | USLXX | 85.70 | 245.16 | 152.98 | | | | | | | | |
| | | 4-Wire DS1 Digital Loop - Zone 2 | | 2 | NTCD1 | USLXX | 194.96 | 245.16 | 152.98 | | | | | | | | |
| | | 4-Wire DS1 Digital Loop - Zone 3 | | 3 | NTCD1 | USLXX | 491.94 | 245.16 | 152.98 | | | | | | | | |
| | | Unbundled Loop Service Rearrangement, change in loop facility, per circuit | | | NTCD1 | UREWO | | 100.93 | 42.98 | | | | | | | | |
| | 4-WIRE 19.2, 56 OR 64 KBPS DIGITAL GRADE LOOP | | | | | | | | | | | | | | | | | |
| | | 4 Wire Unbundled Digital Loop 2.4 Kbps - Zone 1 | | 1 | NTCUD | UDL2X | 30.99 | 121.86 | 85.48 | | | | | | | | |
| | | 4 Wire Unbundled Digital Loop 2.4 Kbps - Zone 2 | | 2 | NTCUD | UDL2X | 36.78 | 121.86 | 85.48 | | | | | | | | |
| | | 4 Wire Unbundled Digital Loop 2.4 Kbps - Zone3 | | 3 | NTCUD | UDL2X | 38.92 | 121.86 | 85.48 | | | | | | | | |
| | | 4 Wire Unbundled Digital Loop 4.8 Kbps -Zone 1 | | 1 | NTCUD | UDL4X | 30.99 | 121.86 | 85.48 | | | | | | | | |
| | | 4 Wire Unbundled Digital Loop 4.8 Kbps - Zone 2 | | 2 | NTCUD | UDL4X | 36.78 | 121.86 | 85.48 | | | | | | | | |
| | | 4 Wire Unbundled Digital Loop 4.8 Kbps - Zone 3 | | 3 | NTCUD | UDL4X | 38.92 | 121.86 | 85.48 | | | | | | | | |
| | | 4 Wire Unbundled Digital Loop 9.6 Kbps - Zone 1 | | 1 | NTCUD | UDL9X | 30.99 | 121.86 | 85.48 | | | | | | | | |
| | | 5 Wire Unbundled Digital Loop 9.6 Kbps - Zone 2 | | 2 | NTCUD | UDL9X | 36.78 | 121.86 | 85.48 | | | | | | | | |
| | | 6 Wire Unbundled Digital Loop 9.6 Kbps - Zone 3 | | 3 | NTCUD | UDL9X | 38.92 | 121.86 | 85.48 | | | | | | | | |
| | | 4 Wire Unbundled Digital 19.2 Kbps - Zone 1 | | 1 | NTCUD | UDL19 | 30.99 | 121.86 | 85.48 | | | | | | | | |
| | | 4 Wire Unbundled Digital 19.2 Kbps - Zone 2 | | 2 | NTCUD | UDL19 | 36.78 | 121.86 | 85.48 | | | | | | | | |

| UNBUNDLED NETWORK ELEMENTS - Louisiana | | | | | | | | | | | | | | Att: 1 Exh: B | | | |
|---|---|---|---|---|---|---|---|---|---|---|---|---|---|---|---|---|---|
| CATEGORY | | RATE ELEMENTS | Interim | Zone | BCS | USOC | RATES($) | | | | | Svc Order Submitted Elec per LSR | Svc Order Submitted Manually per LSR | Incremental Charge - Manual Svc Order vs. Electronic- 1st | Incremental Charge - Manual Svc Order vs. Electronic- Add'l | Incremental Charge - Manual Svc Order vs. Electronic- Disc 1st | Incremental Charge - Manual Svc Order vs. Electronic- Disc Add'l |
| | | | | | | | Rec | Nonrecurring | | Nonrecurring Disconnect | | OSS Rates($) | | | | | |
| | | | | | | | | First | Add'l | First | Add'l | SOMEC | SOMAN | SOMAN | SOMAN | SOMAN | SOMAN |
| | | 4 Wire Unbundled Digital 19.2 Kbps - Zone 3 | | 3 | NTCUD | UDL19 | 38.92 | 121.86 | 85.48 | | | | | | | | |
| | | 4 Wire Unbundled Digital Loop 56 Kbps - Zone 1 | | 1 | NTCUD | UDL56 | 30.99 | 121.86 | 85.48 | | | | | | | | |
| | | 4 Wire Unbundled Digital Loop 56 Kbps - Zone 2 | | 2 | NTCUD | UDL56 | 36.78 | 121.86 | 85.48 | | | | | | | | |
| | | 4 Wire Unbundled Digital Loop 56 Kbps - Zone 3 | | 3 | NTCUD | UDL56 | 38.92 | 121.86 | 85.48 | | | | | | | | |
| | | 4 Wire Unbundled Digital Loop 64 Kbps - Zone 1 | | 1 | NTCUD | UDL64 | 30.99 | 121.86 | 85.48 | | | | | | | | |
| | | 4 Wire Unbundled Digital Loop 64 Kbps - Zone 2 | | 2 | NTCUD | UDL64 | 36.78 | 121.86 | 85.48 | | | | | | | | |
| | | 4 Wire Unbundled Digital Loop 64 Kbps - Zone 3 | | 3 | NTCUD | UDL64 | 38.92 | 121.86 | 85.48 | | | | | | | | |
| | | Unbundled Loop Service Rearrangement, change in loop facility, per circuit | | | NTCUD | UREWO | | 101.97 | 49.67 | | | | | | | | |
| | | Order Coordination for Specified Conversion Time (per LSR) | | | NTCVG, NTCUD, NTCD1 | OCOSL | | 17.56 | | | | | | | | | |
| **UNBUNDLED DEDICATED TRANSPORT** | | | | | | | | | | | | | | | | | |
| | **INTEROFFICE CHANNEL - DEDICATED TRANSPORT** | | | | | | | | | | | | | | | | |
| | | Interoffice Channel - 2-Wire Voice Grade - per mile | | | U1TVX | 1L5XX | 0.013 | | | | | | | | | | |
| | | Interoffice Channel - 2-Wire Voice Grade - Facility Termination | | | U1TVX | U1TV2 | 22.60 | 39.36 | 26.62 | | | | | | | | |
| | | Interoffice Channel - 2-Wire Voice Grade Rev Bat. - per mile | | | U1TVX | 1L5XX | 0.013 | | | | | | | | | | |
| | | Interoffice Channel - 2-Wire VG Rev Bat. - Facility Termination | | | U1TVX | U1TR2 | 22.60 | 39.36 | 26.62 | | | | | | | | |
| | | Interoffice Channel - 4-Wire Voice Grade - per mile | | | U1TVX | 1L5XX | 0.013 | | | | | | | | | | |
| | | Interoffice Channel - 4- Wire Voice Grade - Facility Termination | | | U1TVX | U1TV4 | 19.81 | 39.36 | 26.62 | | | | | | | | |
| | | Interoffice Channel - 56 kbps - per mile | | | U1TDX | 1L5XX | 0.013 | | | | | | | | | | |
| | | Interoffice Channel - 56 kbps - Facility Termination | | | U1TDX | U1TD5 | 15.61 | 39.36 | 26.62 | | | | | | | | |
| | | Interoffice Channel - 64 kbps - per mile | | | U1TDX | 1L5XX | 0.013 | | | | | | | | | | |
| | | Interoffice Channel - 64 kbps - Facility Termination | | | U1TDX | U1TD6 | 15.61 | 39.36 | 26.62 | | | | | | | | |
| | | Interoffice Channel - DS1 - per mile | | | U1TD1 | 1L5XX | 0.2652 | | | | | | | | | | |
| | | Interoffice Channel - DS1 - Facility Termination | | | U1TD1 | U1TF1 | 70.47 | 86.69 | 79.44 | | | | | | | | |
| | | Interoffice Channel - DS3 - per mile | | | U1TD3 | 1L5XX | 6.04 | | | | | | | | | | |
| | | Interoffice Channel - DS3 - Facility Termination | | | U1TD3 | U1TF3 | 850.45 | 270.69 | 158.05 | | | | | | | | |
| | | Interoffice Channel - STS-1 - per mile | | | U1TS1 | 1L5XX | 6.04 | | | | | | | | | | |
| | | Interoffice Channel - STS-1 - Facility Termination | | | U1TS1 | U1TFS | 830.19 | 270.69 | 158.05 | | | | | | | | |
| | **UNBUNDLED DARK FIBER** | | | | | | | | | | | | | | | | |
| | | Dark Fiber - Interoffice Transport, Per Four Fiber Strands, Per Route Mile Or Fraction Thereof | | | UDF, UDFCX | 1L5DF | 25.28 | | | | | | | | | | |
| | | Dark Fiber - Interoffice Transport, Per Four Fiber Strands, Per Route Mile Or Fraction Thereof | | | UDF, UDFCX | UDF14 | | 620.60 | 133.88 | | | | | | | | |
| **HIGH CAPACITY UNBUNDLED LOCAL LOOP** | | | | | | | | | | | | | | | | | |
| | **DS-3/STS-1 UNBUNDLED LOCAL LOOP - Stand Alone** | | | | | | | | | | | | | | | | |
| | | DS3 Unbundled Local Loop - per mile | | | UE3 | 1L5ND | 10.04 | | | | | | | | | | |
| | | DS3 Unbundled Local Loop - Facility Termination | | | UE3 | UE3PX | 362.34 | 438.46 | 256.30 | | | | | | | | |
| | | STS-1Unbundled Local Loop - per mile | | | UDLSX | 1L5ND | 10.04 | | | | | | | | | | |

| UNBUNDLED NETWORK ELEMENTS - Louisiana | | | | | | | | | | | | | | Att: 1 Exh: B | | | |
|---|---|---|---|---|---|---|---|---|---|---|---|---|---|---|---|---|---|
| CATEGORY | | RATE ELEMENTS | Interim | Zone | BCS | USOC | RATES($) | | | | | Svc Order Submitted Elec per LSR | Svc Order Submitted Manually per LSR | Incremental Charge - Manual Svc Order vs. Electronic- 1st | Incremental Charge - Manual Svc Order vs. Electronic- Add'l | Incremental Charge - Manual Svc Order vs. Electronic- Disc 1st | Incremental Charge - Manual Svc Order vs. Electronic- Disc Add'l |
| | | | | | | | Rec | Nonrecurring | | Nonrecurring Disconnect | | OSS Rates($) | | | | | |
| | | | | | | | | First | Add'l | First | Add'l | SOMEC | SOMAN | SOMAN | SOMAN | SOMAN | SOMAN |
| | | STS-1 Unbundled Local Loop - Facility Termination | | | UDLSX | UDLS1 | 374.56 | 438.46 | 256.30 | | | | | | | | |
| ENHANCED EXTENDED LINK (EELs) | | | | | | | | | | | | | | | | | |
| | Network Elements Used in Combinations | | | | | | | | | | | | | | | | |
| | | 2-Wire VG Loop (SL2) in Combination - Zone 1 | | 1 | UNCVX | UEAL2 | 14.93 | 94.21 | 45.09 | | | | | | | | |
| | | 2-Wire VG Loop (SL2) in Combination - Zone 2 | | 2 | UNCVX | UEAL2 | 25.35 | 94.21 | 45.09 | | | | | | | | |
| | | 2-Wire VG Loop (SL2) in Combination - Zone 3 | | 3 | UNCVX | UEAL2 | 50.46 | 94.21 | 45.09 | | | | | | | | |
| | | 4-Wire Analog Voice Grade Loop in Combination - Zone 1 | | 1 | UNCVX | UEAL4 | 30.81 | 94.21 | 45.09 | | | | | | | | |
| | | 4-Wire Analog Voice Grade Loop in Combination - Zone 2 | | 2 | UNCVX | UEAL4 | 38.32 | 94.21 | 45.09 | | | | | | | | |
| | | 4-Wire Analog Voice Grade Loop in Combination - Zone 3 | | 3 | UNCVX | UEAL4 | 60.39 | 94.21 | 45.09 | | | | | | | | |
| | | 2-Wire ISDN Loop in Combination - Zone 1 | | 1 | UNCNX | U1L2X | 22.09 | 94.21 | 45.09 | | | | | | | | |
| | | 2-Wire ISDN Loop in Combination - Zone 2 | | 2 | UNCNX | U1L2X | 35.28 | 94.21 | 45.09 | | | | | | | | |
| | | 2-Wire ISDN Loop in Combination - Zone 3 | | 3 | UNCNX | U1L2X | 65.18 | 94.21 | 45.09 | | | | | | | | |
| | | 4-Wire 56Kbps Digital Grade Loop in Combination - Zone 1 | | 1 | UNCDX | UDL56 | 30.99 | 94.21 | 45.09 | | | | | | | | |
| | | 4-Wire 56Kbps Digital Grade Loop in Combination - Zone 2 | | 2 | UNCDX | UDL56 | 36.78 | 94.21 | 45.09 | | | | | | | | |
| | | 4-Wire 56Kbps Digital Grade Loop in Combination - Zone 3 | | 3 | UNCDX | UDL56 | 38.92 | 94.21 | 45.09 | | | | | | | | |
| | | 4-Wire 64Kbps Digital Grade Loop in Combination - Zone 1 | | 1 | UNCDX | UDL64 | 30.99 | 94.21 | 45.09 | | | | | | | | |
| | | 4-Wire 64Kbps Digital Grade Loop in Combination - Zone 2 | | 2 | UNCDX | UDL64 | 36.78 | 94.21 | 45.09 | | | | | | | | |
| | | 4-Wire 64Kbps Digital Grade Loop in Combination - Zone 3 | | 3 | UNCDX | UDL64 | 38.92 | 94.21 | 45.09 | | | | | | | | |
| | | 4-Wire DS1 Digital Loop in Combination - Zone 1 | | 1 | UNC1X | USLXX | 85.70 | 169.22 | 100.89 | | | | | | | | |
| | | 4-Wire DS1 Digital Loop in Combination - Zone 2 | | 2 | UNC1X | USLXX | 194.96 | 169.22 | 100.89 | | | | | | | | |
| | | 4-Wire DS1 Digital Loop in Combination - Zone 3 | | 3 | UNC1X | USLXX | 491.94 | 169.22 | 100.89 | | | | | | | | |
| | | DS3 Local Loop in combination - per mile | | | UNC3X | 1L5ND | 10.04 | | | | | | | | | | |
| | | DS3 Local Loop in combination - Facility Termination | | | UNC3X | UE3PX | 362.34 | 188.45 | 125.51 | | | | | | | | |
| | | STS-1 Local Loop in combination - per mile | | | UNCSX | 1L5ND | 10.04 | | | | | | | | | | |
| | | STS-1 Local Loop in combination - Facility Termination | | | UNCSX | UDLS1 | 374.56 | 188.45 | 125.51 | | | | | | | | |
| | | Interoffice Channel in combination - 2-wire VG - per mile | | | UNCVX | 1L5XX | 0.013 | | | | | | | | | | |
| | | Interoffice Channel in combination - 2-wire VG - Facility Termination | | | UNCVX | U1TV2 | 22.60 | 72.60 | 41.75 | | | | | | | | |
| | | Interoffice Channel in combination - 4-wire VG - per mile | | | UNCVX | 1L5XX | 0.013 | | | | | | | | | | |
| | | Interoffice Channel in combination - 4-wire VG - Facility Termination | | | UNCVX | U1TV4 | 19.81 | 72.60 | 41.75 | | | | | | | | |
| | | Interoffice Channel in combination - 4-wire 56 kbps - per mile | | | UNCDX | 1L5XX | 0.013 | | | | | | | | | | |
| | | Interoffice Channel in combination - 4-wire 56 kbps - Facility Termination | | | UNCDX | U1TD5 | 15.61 | 72.60 | 41.75 | | | | | | | | |
| | | Interoffice Channel in combination - 4-wire 64 kbps - per mile | | | UNCDX | 1L5XX | 0.013 | | | | | | | | | | |
| | | Interoffice Channel in combination - 4-wire 64 kbps - Facility Termination | | | UNCDX | U1TD6 | 15.61 | 72.60 | 41.75 | | | | | | | | |

| UNBUNDLED NETWORK ELEMENTS - Louisiana | | | | | | | | | | | | | | Att: 1 Exh: B | | | |
|---|---|---|---|---|---|---|---|---|---|---|---|---|---|---|---|---|---|
| CATEGORY | | RATE ELEMENTS | Interim | Zone | BCS | USOC | RATES($) | | | | | Svc Order Submitted Elec per LSR | Svc Order Submitted Manually per LSR | Incremental Charge - Manual Svc Order vs. Electronic- 1st | Incremental Charge - Manual Svc Order vs. Electronic- Add'l | Incremental Charge - Manual Svc Order vs. Electronic- Disc 1st | Incremental Charge - Manual Svc Order vs. Electronic- Disc Add'l |
| | | | | | | | Rec | Nonrecurring | | Nonrecurring Disconnect | | OSS Rates($) | | | | | |
| | | | | | | | | First | Add'l | First | Add'l | SOMEC | SOMAN | SOMAN | SOMAN | SOMAN | SOMAN |
| | | Interoffice Channel in combination - DS1 - per mile | | | UNC1X | 1L5XX | 0.2652 | | | | | | | | | | |
| | | Interoffice Channel in combination - DS1 Facility Termination | | | UNC1X | U1TF1 | 70.47 | 143.58 | 103.88 | | | | | | | | |
| | | Interoffice Channel in combination - DS3 - per mile | | | UNC3X | 1L5XX | 6.04 | | | | | | | | | | |
| | | Interoffice Channel in combination - DS3 - Facility Termination | | | UNC3X | U1TF3 | 850.45 | 296.68 | 121.16 | | | | | | | | |
| | | Interoffice Channel in combination - STS-1 - per mile | | | UNCSX | 1L5XX | 6.04 | | | | | | | | | | |
| | | Interoffice Channel in combination - STS-1 Facility Termination | | | UNCSX | U1TFS | 830.19 | 296.68 | 121.16 | | | | | | | | |
| ADDITIONAL NETWORK ELEMENTS | | | | | | | | | | | | | | | | | |
| | Optional Features & Functions: | | | | | | | | | | | | | | | | |
| | | Clear Channel Capability Extended Frame Option - per DS1 | I | | U1TD1, ULDD1,UNC1X | CCOEF | | 0.00 | 0.00 | 0.00 | 0.00 | | | | | | |
| | | Clear Channel Capability Super FrameOption - per DS1 | I | | U1TD1, ULDD1,UNC1X | CCOSF | | 0.00 | 0.00 | 0.00 | 0.00 | | | | | | |
| | | Clear Channel Capability (SF/ESF) Option - Subsequent Activity - per DS1 | I | | ULDD1, U1TD1, UNC1X, USL | NRCCC | | 184.65 | 23.79 | 1.97 | 0.77 | | | | | | |
| | | C-bit Parity Option - Subsequent Activity - per DS3 | i | | U1TD3, ULDD3, UE3, UNC3X | NRCC3 | | 218.78 | 7.66 | 0.7263 | 0.00 | | | | | | |
| | | DS1/DS0 Channel System | | | UNC1X | MQ1 | 105.09 | 59.97 | 12.96 | | | | | | | | |
| | | DS3/DS1Channel System | | | UNC3X, UNCSX | MQ3 | 201.48 | 107.05 | 48.07 | | | | | | | | |
| | | Voice Grade COCI in combination | | | UNCVX | 1D1VG | 0.6497 | 5.91 | 4.26 | | | | | | | | |
| | | Voice Grade COCI - for Stand Alone Local Loop | | | UEA | 1D1VG | 0.6497 | 5.91 | 4.26 | | | | | | | | |
| | | Voice Grade COCI - for connection to a channelized DS1 Local Channel in the same SWC as collocation | | | U1TUC | 1D1VG | 0.6497 | 5.91 | 4.26 | | | | | | | | |
| | | OCU-DP COCI (2.4-64kbs) in combination | | | UNCDX | 1D1DD | 1.38 | 5.91 | 4.26 | | | | | | | | |
| | | OCU-DP COCI (2.4-64kbs) - for Stand Alone Local Loop | | | UDL | 1D1DD | 1.38 | 5.91 | 4.26 | | | | | | | | |
| | | OCU-DP COCI (2.4-64kbs) - for connection to a channelized DS1 Local Channel in the same SWC as collocation | | | U1TUD | 1D1DD | 1.38 | 5.91 | 4.26 | | | | | | | | |
| | | 2-wire ISDN COCI (BRITE) in combination | | | UNCNX | UC1CA | 2.96 | 6.39 | 4.58 | | | | | | | | |
| | | 2-wire ISDN COCI (BRITE) - for a Local Loop | | | UDN | UC1CA | 2.96 | 6.39 | 4.58 | | | | | | | | |
| | | 2-wire ISDN COCI (BRITE) - for connection to a channelized DS1 Local Channel in the same SWC as collocation | | | U1TUB | UC1CA | 2.96 | 6.39 | 4.58 | | | | | | | | |
| | | DS1 COCI in combination | | | UNC1X | UC1D1 | 11.78 | 5.91 | 4.26 | | | | | | | | |
| | | DS1 COCI - for Stand Alone Local Channel | | | ULDD1 | UC1D1 | 11.78 | 5.91 | 4.26 | | | | | | | | |
| | | DS1 COCI - for Stand Alone Interoffice Channel | | | U1TD1 | UC1D1 | 11.78 | 5.91 | 4.26 | | | | | | | | |
| | | DS1 COCI - for Stand Alone Local Loop | | | USL | UC1D1 | 11.78 | 5.91 | 4.26 | | | | | | | | |
| | | DS1 COCI - for connection to a channelized DS1 Local Channel in the same SWC as collocation | | | U1TUA | UC1D1 | 11.78 | 5.91 | 4.26 | | | | | | | | |
| | | Wholesale - UNE, Switch-As-Is Conversion Charge | | | UNCVX, UNCDX, UNC1X, UNC3X, | UNCCC | | 5.43 | 5.43 | | | | | | | | |
| | | Unbundled Misc Rate Element, SNE SAI, Single Network Element - Switch As Is Non-recurring Charge, per circuit (LSR) | I | | U1TVX, U1TDX, U1TD1, U1TD3, | URESL | | 36.83 | 16.12 | | | | | | | | |
| | | Unbundled Misc Rate Element, SNE SAI, Single Network Element - Switch As Is Non-recurring Charge, incremental charge per circuit | i | | U1TVX, U1TDX, U1TD1, U1TD3, | URESP | | 1.49 | 1.49 | | | | | | | | |
| | Access to DCS - Customer Reconfiguration (FlexServ) | | | | | | | | | | | | | | | | |
| | | Customer Reconfiguration Establishment | | | | | | 1.43 | | | | | | | | | |
| | | DS1 DCS Termination with DS0 Switching | | | | | 19.58 | 24.81 | 19.09 | | | | | | | | |
| | | DS1 DCS Termination with DS1 Switching | | | | | 10.95 | 17.93 | 12.22 | | | | | | | | |
| | | DS3 DCS Termination with DS1 Switching | | | | | 149.41 | 24.81 | 19.09 | | | | | | | | |

| UNBUNDLED NETWORK ELEMENTS - Louisiana | | | | | | | | | | | | | | Att: 1 Exh: B | | | |
|---|---|---|---|---|---|---|---|---|---|---|---|---|---|---|---|---|---|
| CATEGORY | | RATE ELEMENTS | Interim | Zone | BCS | USOC | RATES($) | | | | | Svc Order Submitted Elec per LSR | Svc Order Submitted Manually per LSR | Incremental Charge - Manual Svc Order vs. Electronic- 1st | Incremental Charge - Manual Svc Order vs. Electronic- Add'l | Incremental Charge - Manual Svc Order vs. Electronic- Disc 1st | Incremental Charge - Manual Svc Order vs. Electronic- Disc Add'l |
| | | | | | | | Rec | Nonrecurring | | Nonrecurring Disconnect | | OSS Rates($) | | | | | |
| | | | | | | | | First | Add'l | First | Add'l | SOMEC | SOMAN | SOMAN | SOMAN | SOMAN | SOMAN |
| | Node (SynchroNet) | | | | | | | | | | | | | | | | |
| | | Node per month | | | UNCDX | UNCNT | 15.43 | | | | | | | | | | |
| | Service Rearrangements | | | | | | | | | | | | | | | | |
| | | NRC - Change in Facility Assignment per circuit Service Rearrangement | I | | U1TVX, U1TDX, UEA, UDL, U1TUC, U1TUD, U1TUB, ULDVX, ULDDX, UNCVX, UNCDX, UNC1X | URETD | | 100.93 | 42.98 | | | | | | | | |
| | | NRC - Change in Facility Assignment per circuit Project Management (added to CFA per circuit if project managed) | I | | U1TVX, U1TDX, UEA, UDL, U1TUC, U1TUD, U1TUB, ULDVX, ULDDX, UNCVX, UNCDX, UNC1X | URETB | | 3.67 | 3.67 | | | | | | | | |
| | | NRC - Order Coordination Specific Time - Dedicated Transport | I | | UNC1X, UNC3X | OCOSR | | 18.85 | 18.85 | | | | | | | | |
| COMMINGLED | | | | | | | | | | | | | | | | | |
| | | Commingling Authorization | | | UNCVX, UNCDX, UNC1X, UNC3X, UNCSX, U1TD1, U1TD3, U1TS1, UE3, UDLSX, U1TVX, U1TDX, U1TUB, ULDVX, ULDD1, ULDD3, ULDS1 | CMGAU | 0.00 | 0.00 | 0.00 | | | | | | | | |
| | Commingled (UNE part of single bandwidth circuit) | | | | | | | | | | | | | | | | |
| | | Commingled VG COCI | | | XDV2X, NTCVG | 1D1VG | 0.6497 | 5.91 | 4.26 | | | | | | | | |
| | | Commingled Digital COCI | | | XDV6X, NTCUD | 1D1DD | 1.38 | 5.91 | 4.26 | | | | | | | | |
| | | Commingled ISDN COCI | | | XDD4X | UC1CA | 2.96 | 6.39 | 4.58 | | | | | | | | |
| | | Commingled 2-wire VG Interoffice Channel | | | XDV2X | U1TV2 | 22.60 | 72.60 | 41.75 | | | | | | | | |
| | | Commingled 4-wire VG Interoffice Channel | | | XDV6X | U1TV4 | 19.81 | 72.60 | 41.75 | | | | | | | | |
| | | Commingled 56kbps Interoffice Channel | | | XDD4X | U1TD5 | 15.61 | 72.60 | 41.75 | | | | | | | | |
| | | Commingled 64kbps Interoffice Channel | | | XDD4X | U1TD6 | 15.61 | 72.60 | 41.75 | | | | | | | | |
| | | Commingled VG/DS0 Interoffice Channel Mileage | | | XDV2X, XDV6X, | 1L5XX | 0.013 | | | | | | | | | | |
| | | Commingled 2-wire Local Loop Zone 1 | | 1 | XDV2X | UEAL2 | 14.93 | 94.21 | 45.09 | | | | | | | | |
| | | Commingled 2-wire Local Loop Zone 2 | | 2 | XDV2X | UEAL2 | 25.35 | 94.21 | 45.09 | | | | | | | | |
| | | Commingled 2-wire Local Loop Zone 3 | | 3 | XDV2X | UEAL2 | 50.46 | 94.21 | 45.09 | | | | | | | | |
| | | Commingled 4-wire Local Loop Zone 1 | | 1 | XDV6X | UEAL4 | 30.81 | 94.21 | 45.09 | | | | | | | | |
| | | Commingled 4-wire Local Loop Zone 2 | | 2 | XDV6X | UEAL4 | 38.32 | 94.21 | 45.09 | | | | | | | | |
| | | Commingled 4-wire Local Loop Zone 3 | | 3 | XDV6X | UEAL4 | 60.39 | 94.21 | 45.09 | | | | | | | | |
| | | Commingled 56kbps Local Loop Zone 1 | | 1 | XDD4X | UDL56 | 30.99 | 94.21 | 45.09 | | | | | | | | |
| | | Commingled 56kbps Local Loop Zone 2 | | 2 | XDD4X | UDL56 | 36.78 | 94.21 | 45.09 | | | | | | | | |
| | | Commingled 56kbps Local Loop Zone 3 | | 3 | XDD4X | UDL56 | 38.92 | 94.21 | 45.09 | | | | | | | | |
| | | Commingled 64kbps Local Loop Zone 1 | | 1 | XDD4X | UDL64 | 30.99 | 94.21 | 45.09 | | | | | | | | |
| | | Commingled 64kbps Local Loop Zone 2 | | 2 | XDD4X | UDL64 | 36.78 | 94.21 | 45.09 | | | | | | | | |
| | | Commingled 64kbps Local Loop Zone 3 | | 3 | XDD4X | UDL64 | 38.92 | 94.21 | 45.09 | | | | | | | | |
| | | Commingled ISDN Local Loop Zone 1 | | 1 | XDD4X | U1L2X | 22.09 | 94.21 | 45.09 | | | | | | | | |
| | | Commingled ISDN Local Loop Zone 2 | | 2 | XDD4X | U1L2X | 35.28 | 94.21 | 45.09 | | | | | | | | |
| | | Commingled ISDN Local Loop Zone 3 | | 3 | XDD4X | U1L2X | 65.18 | 94.21 | 45.09 | | | | | | | | |
| | | Commingled DS1 COCI | | | XDH1X, NTCD1 | UC1D1 | 11.78 | 5.91 | 4.26 | | | | | | | | |
| | | Commingled DS1 Interoffice Channel | | | XDH1X | U1TF1 | 70.47 | 143.58 | 103.88 | | | | | | | | |
| | | Commingled DS1 Interoffice Channel Mileage | | | XDH1X | 1L5XX | 0.2652 | | | | | | | | | | |
| | | Commingled DS1/DS0 Channel System | | | XDH1X | MQ1 | 105.09 | 59.97 | 12.96 | | | | | | | | |
| | | Commingled DS1 Local Loop Zone 1 | | 1 | XDH1X | USLXX | 85.70 | 169.22 | 100.89 | | | | | | | | |
| | | Commingled DS1 Local Loop Zone 2 | | 2 | XDH1X | USLXX | 194.96 | 169.22 | 100.89 | | | | | | | | |
| | | Commingled DS1 Local Loop Zone 3 | | 3 | XDH1X | USLXX | 491.94 | 169.22 | 100.89 | | | | | | | | |
| | | Commingled DS3 Local Loop | | | HFQC6 | UE3PX | 362.34 | 188.45 | 125.51 | | | | | | | | |
| | | Commingled DS3/STS-1 Local Loop Mileage | | | HFQC6, HFRST | 1L5ND | 10.04 | | | | | | | | | | |
| | | Commingled STS-1 Local Loop | | | HFRST | UDLS1 | 374.56 | 188.45 | 125.51 | | | | | | | | |
| | | Commingled DS3/DS1 Channel System | | | HFQC6 | MQ3 | 201.48 | 107.05 | 48.07 | | | | | | | | |
| | | Commingled DS3 Interoffice Channel | | | HFQC6 | U1TF3 | 850.45 | 296.68 | 121.16 | | | | | | | | |
| | | Commingled DS3 Interoffice Channel Mileage | | | HFQC6 | 1L5XX | 6.04 | | | | | | | | | | |
| | | Commingled STS-1Interoffice Channel | | | HFRST | U1TFS | 830.19 | 296.68 | 121.16 | | | | | | | | |
| | | Commingled STS-1Interoffice Channel Mileage | | | HFRST | 1L5XX | 6.04 | | | | | | | | | | |

| UNBUNDLED NETWORK ELEMENTS - Louisiana | | | | | | | | | | | | | | Att: 1 Exh: B | | | |
|---|---|---|---|---|---|---|---|---|---|---|---|---|---|---|---|---|---|
| CATEGORY | | RATE ELEMENTS | Interim | Zone | BCS | USOC | RATES($) | | | | | Svc Order Submitted Elec per LSR | Svc Order Submitted Manually per LSR | Incremental Charge - Manual Svc Order vs. Electronic- 1st | Incremental Charge - Manual Svc Order vs. Electronic- Add'l | Incremental Charge - Manual Svc Order vs. Electronic- Disc 1st | Incremental Charge - Manual Svc Order vs. Electronic- Disc Add'l |
| | | | | | | | Rec | Nonrecurring | | Nonrecurring Disconnect | | OSS Rates($) | | | | | |
| | | | | | | | | First | Add'l | First | Add'l | SOMEC | SOMAN | SOMAN | SOMAN | SOMAN | SOMAN |
| | | Commingled Dark Fiber - Interoffice Transport, Per Four Fiber Strands, Per Route Mile Or Fraction Thereof | | | HEQDL | 1L5DF | 25.28 | | | | | | | | | | |
| | | Commingled Dark Fiber - Interoffice Transport, Per Four Fiber Strands, Per Route Mile Or Fraction Thereof | | | HEQDL | UDF14 | | 620.60 | 133.88 | | | | | | | | |
| | | UNE to Commingled Conversion Tracking | | | XDH1X, HFQC6 | CMGUN | 0.00 | 0.00 | 0.00 | 0.00 | 0.00 | | | | | | |
| | | SPA to Commingled Conversion Tracking | | | XDH1X, HFQC6 | CMGSP | 0.00 | 0.00 | 0.00 | 0.00 | 0.00 | | | | | | |
| | | | | | | | | | | | | | | | | | |
| | Note: Rates displaying an "I" in interim column are interim as a result of a Commission order. | | | | | | | | | | | | | | | | |

| UNBUNDLED NETWORK ELEMENTS - Louisiana | | | | | | | | | | | | | | Att: 1 Exh C | | | |
|---|---|---|---|---|---|---|---|---|---|---|---|---|---|---|---|---|---|
| CATEGORY | | RATE ELEMENTS | Interim | Zone | BCS | USOC | RATES($) | | | | | Svc Order Submitted Elec per LSR | Svc Order Submitted Manually per LSR | Incremental Charge - Manual Svc Order vs. Electronic-1st | Incremental Charge - Manual Svc Order vs. Electronic-Add'l | Incremental Charge - Manual Svc Order vs. Electronic-Disc 1st | Incremental Charge - Manual Svc Order vs. Electronic-Disc Add'l |
| | | | | | | | | Nonrecurring | | Nonrecurring Disconn | | OSS Rates($) | | | | | |
| | | | | | | | Rec | First | Add'l | First | Add'l | SOMEC | SOMAN | SOMAN | SOMAN | SOMAN | SOMAN |
| 911 PBX LOCATE | | | | | | | | | | | | | | | | | |
| | 911 PBX LOCATE DATABASE CAPABILITY | | | | | | | | | | | | | | | | |
| | | Service Establishment per CLEC per End User Account | | | 9PBDC | 9PBEU | | 1,819.00 | | | | | | | | | |
| | | Changes to TN Range or Customer Profile | | | 9PBDC | 9PBTN | | 181.99 | | | | | | | | | |
| | | Per Telephone Number (Monthly) | | | 9PBDC | 9PBMM | 0.07 | | | | | | | | | | |
| | | Change Company (Service Provider) ID | | | 9PBDC | 9PBPC | | 534.22 | | | | | | | | | |
| | | PBX Locate Service Support per CLEC (Monthlt) | | | 9PBDC | 9PBMR | 178.58 | | | | | | | | | | |
| | | Service Order Charge | | | 9PBDC | 9PBSC | | 15.20 | | | | | | | | | |
| | 911 PBX LOCATE TRANSPORT COMPONENT | | | | | | | | | | | | | | | | |
| | See Att 3 | | | | | | | | | | | | | | | | |

**Amendment**
**to the**
**Agreement Between**
**Level 3 Communications, L.L.C.**
**and**
**BellSouth Telecommunications, Inc.**
**Dated June 23, 2004**

Pursuant to this Amendment, (the "Amendment"), Level 3 Communications, L.L.C. ("Level 3"), and BellSouth Telecommunications, Inc. ("BellSouth"), hereinafter referred to collectively as the "Parties", hereby agree to amend that certain Interconnection Agreement between the Parties dated June 23, 2004 ("Agreement").

WHEREAS, on October 20, 2006, the Mississippi Public Service Commission ("Commission") issued its Order in Docket No. 2005-AD-139, Order Establishing Generic Docket to Consider Change of Law to Existing Interconnection Agreements ("Order"); and

WHEREAS, the Parties are obligated to amend the Agreement to bring it in compliance with the Commission's Order; and

WHEREAS, the Parties enter into this Amendment without prejudice to any position they may take, or have taken, with respect to similar future agreements between the Parties; and

NOW, THEREFORE, in consideration of the mutual provisions contained herein and other good and valuable consideration, the receipt and sufficiency of which are hereby acknowledged, the Parties hereby covenant and agree as follows:

1. The Parties hereby agree to incorporate into the Agreement the contract provisions set forth in Exhibit A hereto, and such contract provisions shall apply to services provided in the state of Mississippi only.

2. The Parties hereby agree to incorporate into the Agreement the rates set forth in Exhibit B hereto, and such rates shall apply to services provided in the state of Mississippi only.

3. To the extent that such contract provisions or rates as set forth in Exhibits A and B hereto conflict with any other rates, terms and conditions in the Agreement, the contract provisions and rates in Exhibits A and B shall prevail in the state of Mississippi.

4. Further, to the extent that defined terms in this Amendment differ from defined terms in the Agreement, such defined terms in the Agreement shall be deemed to have the same meaning as the alternative defined terms in this Amendment to the extent necessary to give full effect to this Amendment consistent with the Mississippi Public Service Commission's Orders.

5. This Amendment shall be deemed effective on March 11, 2006 ("Effective Date").

6. All of the other provisions of the Agreement shall remain in full force and effect.

7. Either or both of the Parties are authorized to submit this Amendment to the Mississippi Public Service Commission for approval subject to Section 252(e) of the Federal Telecommunications Act of 1996.

IN WITNESS WHEREOF, the Parties have executed this Amendment the day and year written below.

**BellSouth Telecommunications, Inc.**

By: Kristen E. Shore

Name: Kristen E. Shore

Title: Director

Date: 4/24/07

**Level 3 Communications, L.L.C.**

By:

Name: Andrea L. Cavalas

Title: Vice President

Date: 2/28/07

Version: MS COL Amendment
11/01/06

# ACCESS TO NETWORK ELEMENTS AND OTHER SERVICES

## 1 Introduction

1.1 This Attachment sets forth rates, terms and conditions for unbundled network elements (Network Elements) and combinations of Network Elements (Combinations) that BellSouth offers to Level 3 for Level 3's provision of Telecommunications Services in accordance with its obligations under Section 251(c)(3) of the Act. Additionally, this Attachment sets forth the rates, terms and conditions for other facilities and services BellSouth makes available to Level 3 (Other Services). Additionally, the provision of a particular Network Element or Other Service may require Level 3 to purchase other Network Elements or services. In the event of a conflict between this Attachment and any other section or provision of this Agreement, the provisions of this Attachment shall control.

1.2 Level 3 shall not obtain a Network Element for the exclusive provision of mobile wireless services or interexchange services.

1.3 Conversion of Wholesale Services to Network Elements or Network Elements to Wholesale Services. Upon request, BellSouth shall convert a wholesale service, or group of wholesale services, to the equivalent Network Element or Combination that is available to Level 3 pursuant to Section 251 of the Act and under this Agreement or convert a Network Element or Combination that is available to Level 3 pursuant to Section 251 of the Act and under this Agreement to an equivalent wholesale service or group of wholesale services offered by BellSouth (collectively "Conversion"). BellSouth shall charge the applicable nonrecurring switch-as-is rates for Conversions to specific Network Elements or Combinations found in Exhibit B to this Amendment. BellSouth shall also charge the same nonrecurring switch-as-is rates when converting from Network Elements or Combinations. Any rate change resulting from the Conversion will be effective as of the next billing cycle following BellSouth's receipt of a complete and accurate Conversion request from Level 3. A Conversion shall be considered termination for purposes of any volume and/or term commitments and/or grandfathered status between Level 3 and BellSouth. Any change from a wholesale service/group of wholesale services to a Network Element/Combination, or from a Network Element/Combination to a wholesale service/group of wholesale services, that requires a physical rearrangement will not be considered to be a Conversion for purposes of this Agreement. BellSouth will not require physical rearrangements if the Conversion can be completed through record changes only. Orders for Conversions will be handled in accordance with the guidelines set forth in the Ordering Guidelines and Processes and CLEC Information Packages as referenced in Section 1.8 below.

1.4 Except to the extent expressly provided otherwise in this Attachment, Level 3 may not maintain unbundled network elements or combinations of unbundled network

elements, that are no longer offered pursuant to this Agreement (collectively "Arrangements"). In the event BellSouth determines that Level 3 has in place any Arrangements after the Effective Date of this Agreement, BellSouth will provide Level 3 with thirty (30) days written notice to disconnect or convert such Arrangements. If Level 3 fails to submit orders to disconnect or convert such Arrangements within such thirty (30) day period, BellSouth will transition such circuits to the equivalent tariffed BellSouth service(s). Those circuits identified and transitioned by BellSouth pursuant to this Section 1.4 shall be subject to all applicable disconnect charges as set forth in this Agreement and the full nonrecurring charges for installation of the equivalent tariffed BellSouth service as set forth in BellSouth's tariffs. The applicable recurring tariff charge shall apply to each circuit as of the Effective Date of this Agreement.

1.5 Prior to submitting an order pursuant to this Agreement for high capacity (DS1 or above) Dedicated Transport or high capacity Loops, Level 3 shall undertake a reasonably diligent inquiry to determine whether Level 3 is entitled to unbundled access to such Network Elements in accordance with the terms of this Agreement. By submitting any such order, Level 3 self-certifies that to the best of Level 3's knowledge, the high capacity Dedicated Transport or high capacity Loop requested is available as a Network Element pursuant to this Agreement. Upon receiving such order, BellSouth shall process the request in reliance upon Level 3's self-certification. To the extent BellSouth believes that such request does not comply with the terms of this Agreement, BellSouth shall seek dispute resolution in accordance with the General Terms and Conditions of this Agreement. In the event such dispute is resolved in BellSouth's favor, BellSouth shall bill Level 3 the difference between the rates for such circuits pursuant to this Agreement and the applicable nonrecurring and recurring charges for the equivalent tariffed service from the date of installation to the date the circuit is transitioned to the equivalent tariffed service. Within thirty (30) days following a decision finding in BellSouth's favor, Level 3 shall submit a spreadsheet identifying those non-compliant circuits to be transitioned to tariffed services or disconnected.

1.5.1 In the event that (1) BellSouth designates a wire center as non-impaired, (2) CLEC converts existing UNEs to other services or orders new services as services other than UNEs, (3) CLEC otherwise would have been entitled to UNEs in such wire center at the time alternative services were provisioned, and (4) BellSouth acknowledges or a state or federal regulatory body with authority determines that, at the time BellSouth designated such wire center as non-impaired, such wire center did not meet the FCC's non-impairment criteria, then upon request of CLEC, BellSouth shall transition to UNEs any alternative services in such wire center that were established after such wire center was designated as non-impaired. In such instances, BellSouth shall refund CLEC the difference between the rate paid by CLEC for such services and the applicable UNE rate, including but not limited to any charges associated with the unnecessary conversion from UNE to other wholesale services.

1.6 BellSouth will perform Routine Network Modifications (RNM) in accordance with FCC 47 C.F.R. § 51.319 (a)(7) and (e)(4) for Loops and Dedicated Transport provided under this Attachment. If BellSouth has anticipated such RNM and performs them during normal operations and has recovered the costs for performing such modifications through the rates set forth in Exhibit A, then BellSouth shall perform such RNM at no additional charge. RNM shall be performed within the intervals established for the Network Element and subject to the performance measurements and associated remedies set forth in Attachment 9 of this Agreement to the extent such RNM were anticipated in the setting of such intervals. If BellSouth has not anticipated a requested network modification as being a RNM and has not recovered the costs of such RNM in the rates set forth in Exhibit A, then such request will be handled as a project on an individual case basis. BellSouth will provide a price quote for the request and, upon receipt of payment from Level 3, BellSouth shall perform the RNM.

1.7 Commingling of Services

1.7.1 Commingling means the connecting, attaching, or otherwise linking of a Network Element, or a Combination, to one or more Telecommunications Services or facilities that Level 3 has obtained at wholesale from BellSouth, or the combining of a Network Element or Combination with one or more such wholesale Telecommunications Services or facilities. Level 3 must comply with all rates, terms or conditions applicable to such wholesale Telecommunications Services or facilities.

1.7.2 Subject to the limitations set forth elsewhere in this Attachment, BellSouth shall not deny access to a Network Element or a Combination on the grounds that one or more of the elements: (1) is connected to, attached to, linked to, or combined with such a facility or service obtained from BellSouth; or (2) shares part of BellSouth's network with access services or inputs for mobile wireless services and/or interexchange services.

1.7.3 Unless otherwise agreed to by the Parties, the Network Element portion of a commingled circuit will be billed at the rates set forth in Exhibit A to Attachment 2 of the Agreement and the remainder of the circuit or service will be billed in accordance with BellSouth's tariffed rates or rates set forth in a separate agreement between the Parties.

1.7.4 When multiplexing equipment is attached to a commingled circuit, the multiplexing equipment will be billed from the same agreement or tariff as the higher bandwidth circuit. Central Office Channel Interfaces (COCI) will be billed from the same agreement or tariff as the lower bandwidth circuit.

1.7.5 Notwithstanding any other provision of this Agreement, BellSouth shall not be obligated to commingle or combine Network Elements or Combinations with any

service, network element or other offering that it is obligated to make available only pursuant to Section 271 of the Act.

1.8 Ordering Guidelines and Processes

1.8.1 For information regarding Ordering Guidelines and Processes for various Network Elements, Combinations and Other Services, Level 3 should refer to the "Guides" section of the BellSouth Interconnection Web site.

1.8.2 Additional information may also be found in the individual CLEC Information Packages located at the "CLEC UNE Products" on BellSouth's Interconnection Web site at: www.interconnection.bellsouth.com/guides/html/unes.html.

1.8.3 The provisioning of Network Elements, Combinations and Other Services to Level 3's Collocation Space will require cross-connections within the central office to connect the Network Element, Combinations or Other Services to the demarcation point associated with Level 3's Collocation Space. These cross-connects are separate components that are not considered a part of the Network Element, Combinations or Other Services and, thus, have a separate charge pursuant to this Agreement.

**2 Loops**

2.1 General. The local loop Network Element is defined as a transmission facility that BellSouth provides pursuant to this Attachment between a distribution frame (or its equivalent) in BellSouth's central office and the loop demarcation point at an End User premises (Loop). Facilities that do not terminate at a demarcation point at an End User premises, including, by way of example, but not limited to, facilities that terminate to another carrier's switch or premises, a cell site, Mobile Switching Center or base station, do not constitute local Loops under Section 251, except to the extent that CLEC may require Loops to such locations for the purpose of providing telecommunications services to its personnel at those locations. The Loop Network Element includes all features, functions, and capabilities of the transmission facilities, including the network interface device, and attached electronics (except those used for the provision of advanced services, such as Digital Subscriber Line Access Multiplexers (DSLAMs)), optronics and intermediate devices (including repeaters and load coils) used to establish the transmission path to the End User's premises, including inside wire owned or controlled by BellSouth. Level 3 shall purchase the entire bandwidth of the Loop and, except as required herein or as otherwise agreed to by the Parties, BellSouth shall not subdivide the frequency of the Loop.

2.1.1 The Loop does not include any packet switched features, functions or capabilities.

2.1.2 Fiber to the Home (FTTH) loops are local loops consisting entirely of fiber optic cable, whether dark or lit, serving an End User's premises or, in the case of predominantly residential multiple dwelling units (MDUs), a fiber optic cable, whether dark or lit, that extends to the MDU minimum point of entry (MPOE). Fiber to the Curb (FTTC) loops are local loops consisting of fiber optic cable connecting to a copper distribution plant that is not more than five hundred (500) feet from the End User's premises or, in the case of predominantly residential MDUs, not more than five hundred (500) feet from the MDU's MPOE. The fiber optic cable in a FTTC loop must connect to a copper distribution plant at a serving area interface from which every other copper distribution subloop also is not more than five hundred (500) feet from the respective End User's premises.

2.1.2.1 In new build (Greenfield) areas, where BellSouth has only deployed FTTH/FTTC facilities, BellSouth is under no obligation to provide Loops. FTTH facilities include fiber loops deployed to the MPOE of a MDU that is predominantly residential regardless of the ownership of the inside wiring from the MPOE to each End User in the MDU.

2.1.2.2 In FTTH/FTTC overbuild situations where BellSouth also has copper Loops, BellSouth will make those copper Loops available to Level 3 on an unbundled basis, until such time as BellSouth chooses to retire those copper Loops using the FCC's network disclosure requirements. In these cases, BellSouth will offer a sixty-four (64) kilobits per second (kbps) voice grade channel over its FTTH/FTTC facilities.

2.1.2.3 Furthermore, in FTTH/FTTC overbuild areas where BellSouth has not yet retired copper facilities, BellSouth is not obligated to ensure that such copper Loops in that area are capable of transmitting signals prior to receiving a request for access to such Loops by Level 3. If a request is received by BellSouth for a copper Loop, and the copper facilities have not yet been retired, BellSouth will restore the copper Loop to serviceable condition if technically feasible. In these instances of Loop orders in an FTTH/FTTC overbuild area, BellSouth's standard Loop provisioning interval will not apply, and the order will be handled on a project basis by which the Parties will negotiate the applicable provisioning interval

2.1.3 A hybrid Loop is a local Loop, composed of both fiber optic cable, usually in the feeder plant, and copper twisted wire or cable, usually in the distribution plant. BellSouth shall provide Level 3 with nondiscriminatory access to the time division multiplexing features, functions and capabilities of such hybrid Loop, on an unbundled basis to establish a complete transmission path between BellSouth's central office and an End User's premises.

2.1.4 Transition for DS1 and DS3 Loops

2.1.4.1 For purposes of this Section 2.1.4, the Transition Period for the Embedded Base of DS1 and DS3 Loops and for the Excess DS1 and DS3 Loops (defined in Section 2.1.4.3) is the twelve (12) month period beginning March 11, 2005 and ending March 10, 2006.

2.1.4.2 For purposes of this Section 2.1.4, Embedded Base means DS1 and DS3 Loops that were in service for Level 3 as of March 10, 2005 in those wire centers that, as of such date, met the criteria set forth in Sections 2.1.4.5.1 or 2.1.4.5.2 below. Subsequent disconnects or loss of End Users shall be removed from the Embedded Base.

2.1.4.3 Excess DS1 and DS3 Loops are those Level 3 DS1 and DS3 Loops in service as of March 10, 2005, in excess of the caps set forth in Sections 2.1.4.5.1 and 2.1.4.5.2 below, respectively. Subsequent disconnects or loss of End Users shall be removed from Excess DS1 and DS3 Loops.

2.1.4.4 For purposes of this Section 2, a Business Line is defined in 47 C.F.R. § 51.5.

2.1.4.5 Notwithstanding anything to the contrary in this Agreement, and except as set forth in Section 2.1.4.12 below, BellSouth shall make available DS1 and DS3 Loops as described in this Section 2.1.4 only for Level 3's Embedded Base and Excess DS1 and DS3 loops during the Transition Period:

2.1.4.5.1 DS1 Loops at any location within the service area of a wire center containing 60,000 or more Business Lines and four (4) or more fiber-based collocators.

2.1.4.5.2 DS3 Loops at any location within the service area of a wire center containing 38,000 or more Business Lines and four (4) or more fiber-based collocators.

2.1.4.6 A list of wire centers meeting the criteria set forth in Sections 2.1.4.5.1 and 2.1.4.5.2 above as of March 10, 2005, as approved by the Mississippi Public Service Commission in Docket No. 2005-AD-139, is available on BellSouth's Master List of Unimpaired Wire Centers as Approved by State Commissions in its Region (Master List of Unimpaired Wire Centers), which is located on BellSouth's Interconnection Services Web site.

2.1.4.7 Notwithstanding the Effective Date of this Agreement, during the Transition Period, the rates for Level 3's Embedded Base of DS1 and DS3 Loops and Level 3's Excess DS1 and DS3 Loops described in this Section 2.1.4 shall be equal to the higher of:

2.1.4.7.1 115% of the rate paid for the element on June 15, 2004; or

2.1.4.7.2 115% of a new rate the Commission establishes, if any, between June 16, 2004 and March 11, 2005.

2.1.4.7.3 These rates shall be as set forth in Exhibit A to Attachment 2 of the Agreement and this Section 2.1.4.

2.1.4.8 The Transition Period shall apply only to (1) Level 3's Embedded Base and (2) Level 3's Excess DS1 and DS3 Loops. Level 3 shall not add new DS1 or DS3 loops as described in this Section 2.1.4 pursuant to this Agreement, except pursuant to the self-certification process as set forth in Section 1.5 of this Attachment and as set forth in Section 2.1.4.12 below.

2.1.4.9 Once a wire center exceeds both of the thresholds set forth in Section 2.1.4.5.1 above, no future DS1 Loop unbundling will be required in that wire center.

2.1.4.10 Once a wire center exceeds both of the thresholds set forth in Section 2.1.4.5.2 above, no future DS3 Loop unbundling will be required in that wire center.

2.1.4.11 No later than December 9, 2005 Level 3 shall submit spreadsheet(s) identifying all of the Embedded Base of circuits and Excess DS1 and DS3 Loops to be either disconnected or converted to other BellSouth services pursuant to Section 1.3 above. The Parties shall negotiate a project schedule for the Conversion of the Embedded Base and Excess DS1 and DS3 Loops.

2.1.4.11.1 If Level 3 fails to submit the spreadsheet(s) specified in Section 2.1.4.11 above for all of its Embedded Base and Excess DS1 and DS3 Loops prior to December 9, 2005, BellSouth will identify Level 3's remaining Embedded Base and Excess DS1 and DS3 Loops, if any, and will transition such circuits to the equivalent tariffed BellSouth service(s). Those circuits identified and transitioned by BellSouth pursuant to this Section 2.1.4.11.1 shall be subject to all applicable disconnect charges as set forth in this Agreement and the full nonrecurring charges for installation of the equivalent tariffed BellSouth service as set forth in BellSouth's tariffs.

2.1.4.11.2 For Embedded Base circuits and Excess DS1 and DS3 Loops converted pursuant to Section 2.1.4.11 above or transitioned pursuant to Section 2.1.4.11.1 above, the applicable recurring tariff charge shall apply to each circuit as of the earlier of the date each circuit is converted or transitioned, as applicable, or March 11, 2006.

2.1.4.12 <u>Modifications and Updates to the Wire Center List and Subsequent Transition Periods</u>

2.1.4.12.1 In the event BellSouth identifies additional wire centers that meet the criteria set forth in Section 2.1.4.5 above, but that were not included in the Initial Wire Center List, BellSouth shall include such additional wire centers in a carrier notification

letter (CNL). Each such list of additional wire centers shall be considered a "Subsequent Wire Center List".

2.1.4.12.2 Effective ten (10) business days after the date of a BellSouth CNL providing a Subsequent Wire Center List, BellSouth shall not be required to unbundle DS1 and/or DS3 Loops, as applicable, in such additional wire center(s), except pursuant to the self-certification process as set forth in Section 1.5 of this Attachment.

2.1.4.12.3 For purposes of Section 2.1.4.12 above, BellSouth shall make available DS1 and DS3 Loops that were in service for Level 3 in a wire center on the Subsequent Wire Center List as of the tenth ($10^{th}$) business day after the date of BellSouth's CNL identifying the Subsequent Wire Center List (Subsequent Embedded Base) until ninety (90) days after the tenth (10th) business day from the date of BellSouth's CNL identifying the Subsequent Wire Center List (Subsequent Transition Period).

2.1.4.12.4 Subsequent disconnects or loss of End Users shall be removed from the Subsequent Embedded Base.

2.1.4.12.5 The rates that shall apply to the Subsequent Embedded Base during the Subsequent Transition Period shall equal the rate paid for that element at the time of BellSouth's posting of the CNL, plus 15%.

2.1.4.12.6 No later than forty (40) days from BellSouth's CNL identifying the Subsequent Wire Center List, Level 3 shall submit a spreadsheet(s) identifying the Subsequent Embedded Base of circuits to be disconnected or converted to other BellSouth services. The Parties shall negotiate a project schedule for the Conversion of the Subsequent Embedded Base.

2.1.4.12.6.1 If Level 3 fails to submit the spreadsheet(s) specified in Section 2.1.4.12.6 above for all of its Subsequent Embedded Base within forty (40) days after the date of BellSouth's CNL identifying the Subsequent Wire Center List, BellSouth will identify Level 3's remaining Subsequent Embedded Base, if any, and will transition such circuits to the equivalent tariffed BellSouth service(s). Those circuits identified and transitioned by BellSouth shall be subject to the applicable disconnect charges as set forth in this Agreement and the full nonrecurring charges for installation of the equivalent tariffed BellSouth service as set forth in BellSouth's tariffs.

2.1.4.12.7 For Subsequent Embedded Base circuits converted pursuant to Section 2.1.4.12.6 above or transitioned pursuant to Section 2.1.4.12.6.1 above, the applicable recurring tariff charges shall apply as of the earlier of the date each circuit is converted or transitioned, as applicable, or the first day after the end of the Subsequent Transition Period.

2.2 Unbundled Digital Loops

2.2.1 BellSouth will offer UDLs. UDLs are service specific, will be designed, will be provisioned with test points (where appropriate), and will come standard with OC and a DLR. The various UDLs are intended to support a specific digital transmission scheme or service.

2.2.2 BellSouth shall make available the following UDLs, subject to restrictions set forth herein:

2.2.2.1 2-wire Unbundled ISDN Digital Loop;

2.2.2.2 2-wire Unbundled ADSL Compatible Loop;

2.2.2.3 2-wire Unbundled HDSL Compatible Loop;

2.2.2.4 4-wire Unbundled HDSL Compatible Loop;

2.2.2.5 4-wire Unbundled DS1 Digital Loop;

2.2.2.6 4-wire Unbundled Digital Loop/DS0 – 64 kbps, 56 kbps and below;

2.2.2.7 DS3 Loop; or

2.2.2.8 STS-1 Loop.

2.2.3 2-wire Unbundled ISDN Digital Loops. These will be provisioned according to industry standards for 2-Wire Basic Rate ISDN services and will come standard with a test point, OC, and a DLR. Level 3 will be responsible for providing BellSouth with a Service Profile Identifier (SPID) associated with a particular ISDN-capable Loop and End User. With the SPID, BellSouth will be able to adequately test the circuit and ensure that it properly supports ISDN service.

2.2.4 2-wire ADSL-Compatible Loop. This is a designed Loop that is provisioned according to Revised Resistance Design (RRD) criteria and may be up to 18,000 feet long and may have up to 6,000 feet of bridged tap (inclusive of Loop length). The Loop is a 2-wire circuit and will come standard with a test point, OC, and a DLR.

2.2.5 2-wire or 4-wire HDSL-Compatible Loop. This is a designed Loop that meets Carrier Serving Area (CSA) specifications, may be up to 12,000 feet long and may have up to 2,500 feet of bridged tap (inclusive of Loop length). It may be a 2-wire or 4-wire circuit and will come standard with a test point, OC, and a DLR.

2.2.6 4-wire Unbundled DS1 Digital Loop.

2.2.6.1 This is a designed 4-wire Loop that is provisioned according to industry standards for DS1 or Primary Rate ISDN services and will come standard with a test point, OC, and a DLR. A DS1 Loop may be provisioned over a variety of loop transmission technologies including copper, HDSL-based technology or fiber optic transport systems. It will include a 4-wire DS1 Network Interface at the End User's location. For purposes of this Agreement, including the transition of DS1 and DS3 Loops described in Section 2.1.4 above, DS1 Loops include 2-wire and 4-wire copper Loops capable of providing high-bit rate digital subscriber line services, such as 2-wire and 4-wire HDSL Compatible Loops.

2.2.6.2 BellSouth shall not provide more than ten (10) unbundled DS1 Loops to Level 3 at any single building in which DS1 Loops are available as unbundled Loops.

2.2.7 4-wire Unbundled Digital/DS0 Loop. These are designed 4-wire Loops that may be configured as sixty-four (64)kbps, fifty-six (56)kbps, nineteen (19)kbps, and other sub-rate speeds associated with digital data services and will come standard with a test point, OC, and a DLR.

2.2.8 DS3 Loop. DS3 Loop is a two-point digital transmission path which provides for simultaneous two-way transmission of serial, bipolar, return-to-zero isochronous digital electrical signals at a transmission rate of forty-four point seven thirty-six (44.736) megabits per second (Mbps) that is dedicated to the use of the ordering CLEC in its provisioning of local exchange and associated exchange access services. It may provide transport for twenty-eight (28) DS1 channels, each of which provides the digital equivalent of twenty-four (24) analog voice grade channels. The interface to unbundled dedicated DS3 transport is a metallic-based electrical interface.

2.2.9 STS-1 Loop. STS-1 Loop is a high-capacity digital transmission path with SONET VT1.5 mapping that is dedicated for the use of the ordering customer for the purpose of provisioning local exchange and associated exchange access services. It is a two-point digital transmission path which provides for simultaneous two-way transmission of serial bipolar return-to-zero synchronous digital electrical signals at a transmission rate of fifty-one point eighty-four (51.84) Mbps. It may provide transport for twenty-eight (28) DS1 channels, each of which provides the digital equivalent of twenty-four (24) analog voice grade channels. The interface to unbundled dedicated STS-1 transport is a metallic-based electrical interface.

2.2.10 Both DS3 Loop and STS-1 Loop require a SI in order to ascertain availability.

2.2.11 DS3 services come with a test point and a DLR. Mileage is airline miles, rounded up and a minimum of one (1) mile applies. BellSouth's TR73501

LightGate®Service Interface and Performance Specifications, Issue D, June 1995 applies to DS3 services.

2.2.12 Level 3 may obtain a maximum of a single Unbundled DS3 Loop to any single building in which DS3 Loops are available as Unbundled Loops.

2.3 Unbundled Loop Modifications (Line Conditioning)

2.3.1 Line Conditioning is defined as routine network modification that BellSouth regularly undertakes to provide xDSL services to its own customers. This may include the removal of any device, from a copper Loop or copper Subloop that may diminish the capability of the Loop or Subloop to deliver high-speed switched wireline telecommunications capability, including xDSL service. Such devices include, load coils, excessive bridged taps, low pass filters, and range extenders. Excessive bridged taps are bridged taps that serves no network design purpose and that are beyond the limits set according to industry standards and/or the BellSouth's TR73600 Unbundled Local Loop Technical Specification.

2.3.2 BellSouth will remove load coils only on copper Loops and Subloops that are less than eighteen thousand (18,000) feet in length.

2.3.3 For any copper loop being ordered by Level 3 which has over six thousand (6,000) feet of combined bridged tap will be modified, upon request from Level 3, so that the loop will have a maximum of six thousand (6,000) feet of bridged tap. This modification will be performed at no additional charge to Level 3. Loop conditioning orders that require the removal of bridged tap that serves no network design purpose on a copper Loop that will result in a combined total of bridged tap between two thousand five hundred (2,500) and six thousand (6,000) feet will be performed at the rates set forth in Exhibit A to Attachment 2 of the Agreement.

2.3.4 Level 3 may request removal of any unnecessary and non-excessive bridged tap (bridged tap between zero (0) and two thousand five hundred (2,500) feet which serves no network design purpose), at rates pursuant to BellSouth's SC Process as mutually agreed to by the Parties.

2.3.5 Rates for ULM are as set forth in Exhibit A to Attachment 2 of the Agreement.

2.3.6 BellSouth will not modify a Loop in such a way that it no longer meets the technical parameters of the original Loop type (e.g., voice grade, ADSL, etc.) being ordered.

2.3.7 If Level 3 requests ULM on a reserved facility for a new Loop order, BellSouth may perform a pair change and provision a different Loop facility in lieu of the reserved facility with ULM if feasible. The Loop provisioned will meet or exceed specifications of the requested Loop facility as modified. Level 3 will not be

charged for ULM if a different Loop is provisioned. For Loops that require a DLR or its equivalent, BellSouth will provide LMU detail of the Loop provisioned.

2.3.8 Level 3 shall request Loop make up information pursuant to this Attachment prior to submitting a service inquiry and/or a LSR for the Loop type that Level 3 desires BellSouth to condition.

2.3.9 When requesting ULM for a Loop that BellSouth has previously provisioned for Level 3, Level 3 will submit a SI to BellSouth. If a spare Loop facility that meets the Loop modification specifications requested by Level 3 is available at the location for which the ULM was requested, Level 3 will have the option to change the Loop facility to the qualifying spare facility rather than to provide ULM. In the event that BellSouth changes the Loop facility in lieu of providing ULM, Level 3 will not be charged for ULM but will only be charged the service order charges for submitting an order.

2.4 Dark Fiber Loop

2.4.1 Dark Fiber Loop is an unused optical transmission facility, without attached signal regeneration, multiplexing, aggregation or other electronics, from the demarcation point at an End User's premises to the End User's serving wire center. Dark Fiber Loops may be strands of optical fiber existing in aerial or underground structure. BellSouth will not provide line terminating elements, regeneration or other electronics necessary for Level 3 to utilize Dark Fiber Loops.

2.4.2 Transition for Dark Fiber Loop

2.4.2.1 For purposes of this Section 2.4.2, the Transition Period for Dark Fiber Loops is the eighteen (18) month period beginning March 11, 2005 and ending September 10, 2006.

2.4.2.2 For purposes of this Section 2.4.2, Embedded Base means Dark Fiber Loops that were in service for Level 3 as of March 10, 2005. Subsequent disconnects or loss of End Users shall be removed from the Embedded Base.

2.4.3 During the Transition Period only, BellSouth shall make available for the Embedded Base Dark Fiber Loops for Level 3 at the terms and conditions set forth in this Attachment.

2.4.4 Notwithstanding the Effective Date of this Agreement, the rates for Level 3's Embedded Base of Dark Fiber Loops during the Transition Period shall be equal to the higher of:

2.4.4.1 115% of the rate paid for the element on June 15, 2004; or

2.4.4.2 115% of a new rate the Commission established, if any, between June 16, 2004 and March 11, 2005.

2.4.4.3 These rates shall be as set forth in Exhibit A to Attachment 2 of the Agreement and this Section 2.4.2.

2.4.5 The Transition Period shall apply only to Level 3's Embedded Base and Level 3 shall not add new Dark Fiber Loops pursuant to this Agreement.

2.4.6 Effective September 11, 2006, Dark Fiber Loops will no longer be made available pursuant to this Agreement.

2.4.7 No later than June 10, 2006 Level 3 shall submit spreadsheet(s) identifying all of the Embedded Base of circuits to be either disconnected or converted to other BellSouth services as Conversions pursuant to Section 1.3 above. The Parties shall negotiate a project schedule for the Conversion of the Embedded Base.

2.4.7.1 If Level 3 fails to submit the spreadsheet(s) specified in Section 2.4.7 above for all of its Embedded Base prior to June 10, 2006, BellSouth will identify Level 3's remaining Embedded Base, if any, and will transition such circuits to the equivalent tariffed BellSouth service(s). Those circuits identified and transitioned by BellSouth pursuant to this Section 2.4.7.1 shall be subject to all applicable disconnect charges as set forth in this Agreement and the full nonrecurring charges for installation of the equivalent tariffed BellSouth service as set forth in BellSouth's tariffs.

2.4.7.2 For Embedded Base circuits converted pursuant to Section 2.4.7 above or transitioned pursuant to Section 2.4.7.1 above, the applicable recurring tariff charge shall apply to each circuit as of the earlier of the date each circuit is converted or transitioned, as applicable, or September 11, 2006.

## 3 Line Splitting

3.1 Line splitting shall mean that a provider of data services (a Data LEC) and a provider of voice services (a Voice CLEC) to deliver voice and data service to End Users over the same Loop. The Voice CLEC and Data LEC may be the same or different carriers.

3.2 Line Splitting – UNE-L. In the event Level 3 provides its own switching or obtains switching from a third party, Level 3 may engage in line splitting arrangements with another CLEC using a splitter, provided by Level 3, in a Collocation Space at the central office where the loop terminates into a distribution frame or its equivalent.

3.3 Line Splitting – Loop and UNE Port (UNE-P)

3.3.1 To the extent Level 3 is purchasing UNE-P pursuant to this Agreement, BellSouth will permit Level 3 to replace UNE-P with Line Splitting. The UNE-P arrangement will be converted to a stand-alone Loop, a Network Element switch port, two (2) collocation cross-connects and the high frequency spectrum line activation. The resulting arrangement shall continue to be included in Level 3's Embedded Base as described in Section 5.2.3.2 below.

3.3.2 Level 3 shall provide BellSouth with a signed LOA between it and the Data LEC or Voice CLEC with which it desires to provision Line Splitting services, if Level 3 will not provide voice and data services.

3.3.3 Line Splitting arrangements in service pursuant to this Section 3.3 must be disconnected or provisioned pursuant to Section 3.2 above on or before March 10, 2006.

3.4 Provisioning Line Splitting and Splitter Space – UNE-P

3.4.1 The Data LEC, Voice CLEC or BellSouth may provide the splitter. When Level 3 or its authorized agent owns the splitter, Line Splitting requires the following: a non-designed analog Loop from the serving wire center to the NID at the End User's location; a collocation cross-connection connecting the Loop to the collocation space; a second collocation cross-connection from the collocation space connected to a voice port; the high frequency spectrum line activation, and a splitter. When BellSouth owns the splitter, Line Splitting requires the following: a non-designed analog Loop from the serving wire center to the NID at the End User's location with CFA and splitter port assignments, and a collocation cross-connection from the collocation space connected to a voice port.

3.4.2 An unloaded 2-wire copper Loop must serve the End User. The meet point for the Voice CLEC and the Data LEC is the point of termination on the MDF for the Data LEC's cable and pairs.

3.4.3 The foregoing procedures are applicable to migration from a UNE-P arrangement to Line Splitting Service.

3.5 Provisioning Line Splitting and Splitter Space – UNE-L

3.5.1 The Voice CLEC provides the splitter when providing Line Splitting with UNE-L. When Level 3 owns the splitter, Line Splitting requires the following: a loop from NID at the End User's location to the serving wire center and terminating into a distribution frame or its equivalent.

3.6 CLEC Provided Splitter – Line Splitting – UNE-P and UNE-L

3.6.1 To order High Frequency Spectrum on a particular Loop, Level 3 must have a DSLAM collocated in the central office that serves the End User of such Loop.

3.6.2 Level 3 may purchase, install and maintain central office POTS splitters in its collocation arrangements. Level 3 may use such splitters for access to its customers and to provide digital line subscriber services to its customers using the High Frequency Spectrum. Existing Collocation rules and procedures and the terms and conditions relating to Collocation set forth in Attachment 4-Central Office shall apply.

3.6.3 Any splitters installed by Level 3 in its collocation arrangement shall comply with ANSI T1.413, Annex E, or any future ANSI splitter Standards. Level 3 may install any splitters that BellSouth deploys or permits to be deployed for itself or any BellSouth affiliate.

3.7 Maintenance – Line Splitting – UNE-P and UNE-L

3.7.1 BellSouth will be responsible for repairing voice troubles and the troubles with the physical loop between the NID at the End User's premises and the termination point.

3.7.2 Level 3 shall indemnify, defend and hold harmless BellSouth from and against any claims, losses, actions, causes of action, suits, demands, damages, injury, and costs including reasonable attorney fees, which arise out of actions related to the other service provider, except to the extent caused by BellSouth's gross negligence or willful misconduct.

## 4 Local Switching

4.1 Notwithstanding anything to the contrary in this Agreement, the services offered pursuant to this Section 4 are limited to DS0 level Local Switching and BellSouth is not required to provide Local Switching pursuant to this Agreement except as set forth in Section 4.2 below.

4.1.1 BellSouth shall not be required to unbundle local circuit switching for Level 3 for a particular End User when Level 3: (1) serves an End User with four (4) or more voice-grade (DS0) equivalents or lines served by BellSouth in Zone 1 of the following MSAs: Atlanta, GA; Miami, FL; Orlando, FL; Ft. Lauderdale, FL; Charlotte-Gastonia-Rock Hill, NC; Greensboro-Winston Salem-High Point, NC; Nashville, TN; and New Orleans, LA; or (2) serves an End User with a DS1 or higher capacity Loop in any service area covered by this Agreement. To the extent that Level 3 is serving any End User as described in (2) of this Section 4.1.1 as of the Effective Date of this Agreement, such End User's arrangement may not remain in place and such Arrangement must be terminated by Level 3 or

transitioned by Level 3, or BellSouth shall disconnect such Arrangements upon thirty (30) days notice.

4.2 Transition for Local Switching

4.2.1 For purposes of this Section 4, the Transition Period for the Embedded Base of Local Switching is the twelve (12) month period beginning March 11, 2005 and ending March 10, 2006.

4.2.2 For the purposes of this Section 4, Embedded Base shall mean Local Switching and any additional elements that are required to be provided in conjunction therewith that were in service for Level 3 as of March 10, 2005. Subsequent disconnects or loss of End Users shall be removed from the Embedded Base.

4.2.3 During the Transition Period only, BellSouth shall make Local Switching available for the Embedded Base, in addition to all elements that are required to be provided in conjunction with Local Switching, at the rates, terms and conditions set forth in this Attachment. The Transition Period shall apply only to Level 3's Embedded Base and Level 3 shall not place new orders for Local Switching pursuant to this Agreement.

4.2.4 Notwithstanding the Effective Date of this Agreement, the rates for Level 3's Embedded Base of Local Switching during the Transition Period shall be equal to the higher of:

4.2.4.1 The rate paid for the element, plus one dollar; or

4.2.4.2 A new rate the Commission establishes, if any, between June 16, 2004 and March 11, 2005, plus one dollar.

4.2.4.3 These rates shall be as set forth in Exhibit A to Attachment 2 of the Agreement and this Section 4.2.

4.2.5 Level 3 must submit orders, to disconnect or convert all of its Embedded Base of Local Switching to other BellSouth services as Conversions pursuant to Section 1.3 above by October 1, 2005.

4.2.5.1 If Level 3 fails to submit orders to disconnect or convert all of its Embedded Base of Local Switching as specified in Section 4.2.5 above prior to October 1, 2005, BellSouth will identify Level 3's remaining Embedded Base of Local Switching and will disconnect such Local Switching. Those circuits identified and disconnected by BellSouth shall be subject to the applicable disconnect charges as set forth in this Agreement.

4.2.6 Effective March 11, 2006, Local Switching will no longer be made available pursuant to this Agreement.

4.3 Common (Shared) Transport.

4.3.1 Common (Shared) Transport, defined as transmission facilities shared by more than one carrier, including BellSouth, between end office switches, between end office switches and tandem switches, and between tandem switches, in BellSouth's network. Where BellSouth Network Elements are connected by intraoffice wiring, such wiring is provided as part of the Network Element and is not Common (Shared) Transport.

4.3.2 Notwithstanding any other provision of this Agreement, BellSouth will only provide unbundled access to Common (Shared) Transport to the extent BellSouth is required to provide and is providing Local Switching to Level 3.

## 5 Unbundled Network Element Combinations

5.1 EELs Audits

5.1.1 BellSouth may, on an annual basis, audit Level 3's records in order to verify compliance with the qualifying service eligibility criteria. The audit shall be conducted by a third party independent auditor, and the audit must be performed in accordance with the standards established by the American Institute for Certified Public Accountants (AICPA). To the extent the independent auditor's report concludes that Level 3 failed to comply with the service eligibility criteria, Level 3 must true-up any difference in payments, convert all noncompliant circuits to the appropriate service, and make the correct payments on a going-forward basis. In the event the auditor's report concludes that Level 3 did not comply in any material respect with the service eligibility criteria, Level 3 shall reimburse BellSouth for the cost of the independent auditor. To the extent the auditor's report concludes that Level 3 did comply in all material respects with the service eligibility criteria, BellSouth will reimburse Level 3 for its reasonable and demonstrable costs associated with the audit. Level 3 will maintain appropriate documentation to support its certifications.

5.1.2 In the event Level 3 converts special access services to UNEs, Level 3 shall be subject to the termination liability provisions in the applicable special access tariffs, if any.

5.2 UNE-P

5.2.1 DS0 Local Switching, as defined in Section 4 above, in combination with a Loop and Common (Shared) Transport as defined in Section 4.3 above (UNE-P) provides local exchange service for the origination or termination of calls. UNE-P supports the same local calling and feature requirements as described in the Local Switching section of this Attachment and the ability to presubscribe to a primary

carrier for intraLATA toll service and/or to presubscribe to a primary carrier for interLATA toll service.

5.2.2 Notwithstanding anything to the contrary in this Agreement, BellSouth is not required to provide UNE-P pursuant to this Agreement except as set forth in Section 5.2.3.

5.2.3 Transition Period for UNE-P

5.2.3.1 For purposes of this Section 5.2.3, the Transition Period for UNE-P is the twelve (12) month period beginning March 11, 2005 and ending March 10, 2006.

5.2.3.2 For the purposes of this Section 5.2.3, Embedded Base shall mean UNE-P and any additional elements that are required to be provided in conjunction therewith that were in service for Level 3 as of March 10, 2005. Subsequent disconnects or loss of End Users shall be removed from the Embedded Base.

5.2.3.3 During the Transition Period only, BellSouth shall make UNE-P available for the Embedded Base, in addition to all elements that are required to be provided in conjunction with UNE-P, at the rates, terms and conditions set forth in this Attachment. The Transition Period shall apply only to Level 3's Embedded Base and Level 3 shall not place new orders for UNE-P pursuant to this Agreement.

5.2.3.4 Notwithstanding the Effective Date of this Agreement, the rates for Level 3's Embedded Base of UNE-P during the Transition Period shall be equal to the higher of:

5.2.3.4.1 The rate paid for the element on June 15, 2004, plus one dollar; or

5.2.3.4.2 A new rate the Commission establishes, if any, between June 16, 2004 and March 11, 2005, plus one dollar.

5.2.3.4.3 These rates shall be as set forth in Exhibit A to Attachment 2 of the Agreement and this Section 5.2.3.4.

5.2.3.5 By October 1, 2005, Level 3 must submit orders or spreadsheets, or if migrating to UNE Loops must use the Bulk Migration process, to either disconnect or convert all of its Embedded Base of UNE-P to other BellSouth services.

5.2.3.5.1 If Level 3 fails to submit orders or spreadsheets converting all of the Embedded Base of UNE-P as specified in Section 5.2.3.5 above prior to October 1, 2005, BellSouth will identify Level 3's remaining Embedded Base of UNE-P and will transition such UNE-P to resold BellSouth telecommunication services, as set forth in Attachment 1. Those circuits identified and transitioned by BellSouth shall be subject to the applicable disconnect charges as set forth in this Agreement and

the full nonrecurring charges for installation of such BellSouth services as set forth in BellSouth's tariffs.

5.2.3.5.2 For Embedded Base UNE-P converted pursuant to Section 5.4.3.5 above or transitioned pursuant to Section 5.4.3.5.1 above, the applicable recurring tariff charges shall apply as of the earlier of the date each circuit is converted or transitioned, as applicable, or March 11, 2006.

5.2.3.6 Effective March 11, 2006, UNE-P will no longer be made available pursuant to this Agreement.

5.2.4 BellSouth shall make 911 updates in the BellSouth 911 database for Level 3's UNE-P. BellSouth will not bill Level 3 for 911 surcharges. Level 3 is responsible for paying all 911 surcharges to the applicable governmental agency.

## 6 Dedicated Transport and Dark Fiber Transport

6.1 Dedicated Transport. Dedicated Transport is defined as BellSouth's transmission facilities between wire centers or switches owned by BellSouth, or between wire centers or switches owned by BellSouth and switches owned by Level 3, including but not limited to DS1, DS3 and OCn level services, as well as dark fiber, dedicated to Level 3. BellSouth shall not be required to provide access to OCn level Dedicated Transport under any circumstances pursuant to this Agreement. In addition, except as set forth in Section 6.2 below, BellSouth shall not be required to provide to Level 3 unbundled access to interoffice transmission facilities that do not connect a pair of wire centers or switches owned by BellSouth ("Entrance Facilities").

6.2 Transition for DS1 and DS3 Dedicated Transport Including DS1 and DS3 Entrance Facilities

6.2.1 For purposes of this Section 6.2, the Transition Period for the Embedded Base of DS1 and DS3 Dedicated Transport, Embedded Base Entrance Facilities and for Excess DS1 and DS3 Dedicated Transport, is the twelve (12) month period beginning March 11, 2005 and ending March 10, 2006.

6.2.2 For purposes of this Section 6.2, Embedded Base means DS1 and DS3 Dedicated Transport that were in service for Level 3 as of March 10, 2005 in those wire centers that, as of such date, met the criteria set forth in Sections 6.2.6.1 or 6.2.6.2 below. Subsequent disconnects or loss of End Users shall be removed from the Embedded Base.

6.2.3 For purposes of this Section 6.2, Embedded Base Entrance Facilities means Entrance Facilities that were in service for Level 3 as of March 10, 2005. Subsequent disconnects or loss of customers shall be removed from the Embedded Base.

6.2.4 For purposes of this Section 6.2, Excess DS1 and DS3 Dedicated Transport means those Level 3 DS1 and DS3 Dedicated Transport facilities in service as of March 10, 2005, in excess of the caps set forth in Sections 6.2.6.1 and 6.2.6.2 below. Subsequent disconnects and loss of End Users shall be removed from Excess DS1 and DS3 Loops.

6.2.5 For purposes of this Section 6.2, a Business Line is as defined in 47 C.F.R. § 51.5.

6.2.6 Notwithstanding anything to the contrary in this Agreement, BellSouth shall make available Dedicated Transport as described in this Section 6.2 only for Level 3's Embedded Base and Excess Dedicated Transport during the Transition Period:

6.2.6.1 DS1 Dedicated Transport where both wire centers at the end points of the route contain 38,000 or more Business Lines or four (4) or more fiber-based collocators.

6.2.6.2 DS3 Dedicated Transport where both wire centers at the end points of the route contain 24,000 or more Business Lines or three (3) or more fiber-based collocators.

6.2.7 A list of wire centers meeting the criteria set forth in Sections 6.2.6.1 or 6.2.6.2 above as of March 10, 2005, as approved by the Mississippi Public Service Commission in Docket No. 2005-AD-139, is available on BellSouth's Master List of Unimpaired Wire Centers as Approved by State Commissions in its Region (Master List of Unimpaired Wire Centers), which is located on BellSouth's Interconnection Services Web site.

6.2.8 Notwithstanding anything to the contrary in this Agreement, BellSouth shall make available Entrance Facilities only for Entrance Facilities and only during the Transition Period.

6.2.9 Notwithstanding the Effective Date of this Agreement, during the Transition Period, the rates for Level 3's Embedded Base of DS1 and DS3 Dedicated Transport, Level 3's Embedded Base Entrance Facilities and for Level 3's Excess DS1 and DS3 Dedicated Transport, as described in this Section 6.2, shall be as set forth in Exhibit the equal to the higher of:

6.2.9.1 115% of the rate paid for the element on June 15, 2004; or

6.2.9.2 115% of a new rate the Commission establishes, if any, between June 16, 2004 and March 11, 2005.

6.2.9.3 These rates shall be as set forth in Exhibit A to Attachment 2 of the Agreement and this Section 6.2.9.

6.2.10 The Transition Period shall apply only to (1) Level 3's Embedded Base and Embedded Base Entrance Facilities; and (2) Level 3's Excess DS1 and DS3

Dedicated Transport. Level 3 shall not add new Entrance Facilities pursuant to this Agreement. Further, Level 3 shall not add new DS1 or DS3 Dedicated Transport as described in this Section 6.2 pursuant to this Agreement, except pursuant to the self-certification process as set forth in Section 1.5 above of and as set forth in Section 6.2.15 below.

6.2.11 Once a wire center exceeds either of the thresholds set forth in Section 6.2.6.1 above, no future DS1 Dedicated Transport unbundling will be required in that wire center.

6.2.12 Once a wire center exceeds either of the thresholds set forth in Section 6.2.6.2 above, no future DS3 Dedicated Transport will be required in that wire center.

6.2.13 No later than December 9, 2005 Level 3 shall submit spreadsheet(s) identifying all of the Embedded Base of circuits, Embedded Base Entrance Facilities, and Excess DS1 and DS3 Dedicated Transport to be either disconnected or converted to other BellSouth services pursuant to Section 1.3 above. The Parties shall negotiate a project schedule for the Conversion of the Embedded Base, Embedded Base Entrance Facilities and Excess DS1 and DS3 Dedicated Transport.

6.2.13.1 If Level 3 fails to submit the spreadsheet(s) specified in Section 6.2.13 above for all of its Embedded Base, Embedded Base Entrance Facilities and Excess DS1 and DS3 Dedicated Transport prior to December 9, 2005, BellSouth will identify Level 3's remaining Embedded Base, Embedded Base Entrance Facilities and Excess DS1 and DS3 Dedicated Transport, if any, and will transition such circuits to the equivalent tariffed BellSouth service(s). Those circuits identified and transitioned by BellSouth pursuant to this Section 6.2.13.1 shall be subject to all applicable disconnect charges as set forth in this Agreement and the full nonrecurring charges for installation of the equivalent tariffed BellSouth service as set forth in BellSouth's tariffs.

6.2.14 For Embedded Base circuits, Embedded Base Entrance Facilities and Excess DS1 and DS3 Dedicated Transport converted pursuant to Section 6.2.13 or transitioned pursuant to Section 6.2.13.1 above, the applicable recurring tariff charge shall apply to each circuit as of the earlier of the date each circuit is converted or transitioned, as applicable, or March 11, 2006.

6.2.15 <u>Modifications and Updates to the Wire Center List and Subsequent Transition Periods</u>

6.2.15.1 In the event BellSouth identifies additional wire centers that meet the criteria set forth in Sections 6.2.6.1 or 6.2.6.2 above, but that were not included in the Initial Wire Center List, BellSouth shall include such additional wire centers in CNL. Each such list of additional wire centers shall be considered a Subsequent Wire Center List.

6.2.15.2 Effective ten (10) business days after the date of a BellSouth CNL providing a Subsequent Wire Center List, BellSouth shall not be required to provide DS1 and DS3 Dedicated Transport, as applicable, in such additional wire center(s), except pursuant to the self-certification process as set forth in Section 1.5 above.

6.2.15.3 For purposes of Section 6.2.15 above, BellSouth shall make available DS1 and DS3 Dedicated Transport that was in service for Level 3 in a wire center on the Subsequent Wire Center List as of the tenth ($10^{th}$) business day after the date of BellSouth's CNL identifying the Subsequent Wire Center List (Subsequent Embedded Base) until ninety (90) days after the tenth (10th) business day from the date of BellSouth's CNL identifying the Subsequent Wire Center List (Subsequent Transition Period).

6.2.15.4 Subsequent disconnects or loss of End Users shall be removed from the Subsequent Embedded Base.

6.2.15.5 The rates that shall apply to the Subsequent Embedded Base during the Subsequent Transition Period shall equal the rate paid for that element at the time of BellSouth's posting of the CNL, plus 15%.

6.2.15.6 No later than forty (40) days from BellSouth's CNL identifying the Subsequent Wire Center List Level 3 shall submit a spreadsheet(s) identifying the Subsequent Embedded Base of circuits to be disconnected or converted to other BellSouth services. The Parties shall negotiate a project schedule for the Conversion of the Subsequent Embedded Base.

6.2.15.6.1 If Level 3 fails to submit the spreadsheet(s) specified in Section 6.2.15.6 above for all of its Subsequent Embedded Base within forty (40) days after the date of BellSouth's CNL identifying the Subsequent Wire Center List, BellSouth will identify Level 3's remaining Subsequent Embedded Base, if any, and will transition such circuits to the equivalent tariffed BellSouth service(s). Those circuits identified and transitioned by BellSouth shall be subject to the applicable disconnect charges as set forth in this Agreement and the full nonrecurring charges for installation of the equivalent tariffed BellSouth service as set forth in BellSouth's tariffs.

6.2.15.7 For Subsequent Embedded Base circuits converted pursuant to Section 6.2.15.6 above or transitioned pursuant to Section 6.2.15.6.1 above, the applicable recurring tariff charges shall apply as of the earlier of the date each circuit is converted or transitioned, as applicable, or the first day after the end of the Subsequent Transition Period.

6.2.16 BellSouth shall offer Dedicated Transport:

6.2.16.1 As capacity on a shared facility; and

6.2.16.2 As a circuit (i.e., DS0, DS1, DS3, STS-1) dedicated to Level 3.

6.2.17 Dedicated Transport may be provided over facilities such as optical fiber, copper twisted pair, and coaxial cable, and shall include transmission equipment such as line terminating equipment, amplifiers, and regenerators.

6.2.18 Level 3 may obtain a maximum of twelve (12) unbundled DS3 Dedicated Transport circuits on each route where DS3 Dedicated Transport is available as a Network Element, and a maximum of ten (10) unbundled DS1 Dedicated Transport circuits on each Route where there is no 251(c)(3) unbundling obligation for DS3 Dedicated Transport but for which impairment exists for DS1 Dedicated Transport. A route is defined as a transmission path between one of BellSouth's wire centers or switches and another of BellSouth's wire centers or switches. A route between two (2) points may pass through one or more intermediate wire centers or switches. Transmission paths between identical end points are the same "route", irrespective of whether they pass through the same intermediate wire centers or switches, if any.

6.3 Dark Fiber Transport. Dark Fiber Transport is defined as Dedicated Transport that consists of unactivated optical interoffice transmission facilities without attached signal regeneration, multiplexing, aggregation or other electronics. Except as set forth in Section 6.3.1 below, BellSouth shall not be required to provide access to Dark Fiber Transport Entrance Facilities pursuant to this Agreement.

6.3.1 Transition for Dark Fiber Transport and Dark Fiber Transport Entrance Facilities

6.3.1.1 For purposes of this Section 6.3.1, the Transition Period for the Embedded Base of Dark Fiber Transport is the eighteen (18) month period beginning March 11, 2005 and ending September 10, 2006.

6.3.1.2 For purposes of this Section 6.3.1, Embedded Base means Dark Fiber Transport that was in service for Level 3 as of March 10, 2005 in those wire centers that, as of such date, met the criteria set forth in Section 6.3.4.1. Subsequent disconnects or loss of End Users shall be removed from the Embedded Base.

6.3.1.3 For purposes of this Section 6.3, a Business Line is as defined in 47 C.F.R. § 51.5.

6.3.1.4 Notwithstanding anything to the contrary in this Agreement, BellSouth shall make available Dark Fiber Transport as described in this Section 6.3.1 only for Level 3's Embedded Base during the Transition Period:

6.3.1.4.1 Dark Fiber Transport where both wire centers at the end points of the route contain twenty-four thousand (24,000) or more Business Lines or three (3) or more fiber-based collocators.

6.3.1.5 A list of wire center meeting the criteria set forth in Section 6.3.1.4.1 above as of March 10, 2005, as approved by the Mississippi Public Service Commission in Docket No. 2005-AD-139, is available on BellSouth's Master List of Unimpaired Wire Centers as Approved by State Commissions in its Region (Master List of Unimpaired Wire Centers), which is located on BellSouth's Interconnection Services Web site.

6.3.1.6 Notwithstanding the Effective Date of this Agreement, during the Transition Period, the rates for Level 3's Embedded Base of Dark Fiber Transport and Dark Fiber Transport Entrance Facilities as described in Section 6.3.1.2 above shall be equal to the higher of :

6.3.1.6.1 115% of the rate paid for the element on June 15, 2004; or

6.3.1.6.2 115% of a new rate the Commission establishes, if any between June 16, 2004 and March 11, 2005,

6.3.1.6.3 These rates shall be as set forth in Exhibit A to the Agreement and this Section 6.3.1.6.

6.3.1.7 The Transition Period shall apply only to Level 3's Embedded Base of Dark Fiber Transport and Dark Fiber Entrance Facilities. Level 3 shall not add new Dark Fiber Transport as described in this Section 6.3.1 except pursuant to the self-certification process as set forth in Section 1.5 of this Attachment and as set forth in Section 6.3.1.11 below. Further, Level 3 shall not add new Dark Fiber Entrance Facilities pursuant to this Agreement.

6.3.1.8 Once a wire center exceeds either of the thresholds set forth in Section 6.3.1.4.1 above, no future Dark Fiber Transport unbundling will be required in that wire center.

6.3.1.9 No later than June 10, 2006 Level 3 shall submit spreadsheet(s) identifying all of the Embedded Base of Dark Fiber Transport and Dark Fiber Entrance Facilities to be either disconnected or converted to other BellSouth services as Conversions pursuant to Section 1.3 above. The Parties shall negotiate a project schedule for the Conversion of the Embedded Base.

6.3.1.9.1 If Level 3 fails to submit the spreadsheet(s) specified in Section 6.3.1.9 above for all of its Embedded Base prior to June 10, 2006, BellSouth will identify Level 3's remaining Embedded Base, if any, and will transition such circuits to the equivalent tariffed BellSouth service(s). Those circuits identified and transitioned by BellSouth pursuant to this Section 6.3.1.9.1 shall be subject to all applicable disconnect charges as set forth in this Agreement and the full nonrecurring charges for installation of the equivalent tariffed BellSouth service as set forth in BellSouth's tariffs.

6.3.1.10 For Embedded Base circuits converted pursuant to Section 6.3.1.9 above or transitioned pursuant to Section 6.3.1.9.1 above, the applicable recurring tariff charge shall apply to each circuit as of the earlier of the date each circuit is converted or transitioned, as applicable, or September 11, 2006.

6.3.1.11 Modifications and Updates to the Wire Center List and Subsequent Transition Periods

6.3.1.11.1 In the event BellSouth identifies additional wire centers that meet the criteria set forth in Section 6.3.1.4.1 above, but that were not included in the Initial Wire Center List, BellSouth shall include such additional wire centers in a CNL. Each such list of additional wire centers shall be considered a "Subsequent Wire Center List".

6.3.1.11.2 Effective ten (10) business days after the date of a BellSouth CNL providing a Subsequent Wire Center List, BellSouth shall not be required to provide unbundled access to Dark Fiber Transport, as applicable, in such additional wire center(s), except pursuant to the self-certification process as set forth in Section 1.5 above.

6.3.1.11.3 For purposes of Section 6.3.1.11, BellSouth shall make available Dark Fiber Transport that were in service for Level 3 in a wire center on the Subsequent Wire Center List as of the tenth ($10^{th}$) business day after the date of BellSouth's CNL identifying the Subsequent Wire Center List (Subsequent Embedded Base) until ninety (90) days after the tenth (10th) business day from the date of BellSouth's CNL identifying the Subsequent Wire Center List (Subsequent Transition Period).

6.3.1.11.4 Subsequent disconnects or loss of End Users shall be removed from the Subsequent Embedded Base.

6.3.1.11.5 The rates that shall apply to the Subsequent Embedded Base during the Subsequent Transition Period shall equal the rate paid for that element at the time of BellSouth's posting of the CNL, plus 15%.

6.3.1.11.6 No later than forty (40) days from BellSouth's CNL identifying the Subsequent Wire Center List Level 3 shall submit a spreadsheet(s) identifying the Subsequent Embedded Base of circuits to be disconnected or converted to other BellSouth services. The Parties shall negotiate a project schedule for the Conversion of the Subsequent Embedded Base.

6.3.1.11.6.1 If Level 3 fails to submit the spreadsheet(s) specified in Section 6.3.1.11.6 above for all of its Subsequent Embedded Base within forty (40) days after the date of BellSouth's CNL identifying the Subsequent Wire Center List, BellSouth will identify Level 3's remaining Subsequent Embedded Base, if any, and will transition such circuits to the equivalent tariffed BellSouth service(s). Those circuits

identified and transitioned by BellSouth shall be subject to the applicable disconnect charges as set forth in this Agreement and the full nonrecurring charges for installation of the equivalent tariffed BellSouth service as set forth in BellSouth's tariffs.

6.3.1.11.7 For Subsequent Embedded Base circuits converted pursuant to Section 6.3.1.11.6 above or transitioned pursuant to Section 6.3.1.11.6.1 above, the applicable recurring tariff charges shall apply as of the earlier of the date each circuit is converted or transitioned, as applicable, or the first day after the end of the Subsequent Transition Period.

## 7 Call Related Databases and Signaling

7.1 Call Related Databases are the databases other than OSS, that are used in signaling networks, for billing and collection, or the transmission, routing or other provision of a Telecommunications Service. Notwithstanding anything to the contrary herein, BellSouth shall only provide unbundled access to call related databases and signaling including but not limited to, BellSouth Switched Access 8XX Toll Free Dialing Ten Digit Screening Service, LIDB, Signaling, Signaling Link Transport, STP, SS7 AIN Access, Service Control Point(SCP\Databases, Local Number Portability (LNP) Databases and Calling Name (CNAM) Database Service pursuant to this Agreement where BellSouth is required to provide and is providing Local Switching or UNE-P to Level 3 pursuant to this Agreement.

7.2 BellSouth Switched Access (SWA) 8XX Toll Free Dialing Ten Digit Screening Service

7.2.1 The BellSouth SWA 8XX Toll Free Dialing Ten Digit Screening Service database (8XX SCP Database) is a SCP that contains customer record information and the functionality to provide call-handling instructions for 8XX calls. The 8XX SCP IN software stores data downloaded from the national SMS/8XX database and provides the routing instructions in response to queries from the SSP or tandem. The BellSouth SWA 8XX Toll Free Dialing Ten Digit Screening Service (8XX TFD Service) utilizes the 8XX SCP Database to provide identification and routing of the 8XX calls, based on the ten digits dialed. At Level 3's option, 8XX TFD Service is provided with or without POTS number delivery, dialing number delivery, and other optional complex features as selected by Level 3.

7.2.2 The 8XX SCP Database is designated to receive and respond to queries using the ANSI Specification of SS7 protocol.

7.3 LIDB

7.3.1 LIDB is a transaction-oriented database accessible through Common Channel Signaling (CCS) networks. For access to LIDB, Level 3 must purchase

appropriate signaling links pursuant to Section 7.4 below. LIDB contains records associated with End User Line Numbers and Special Billing Numbers. LIDB accepts queries from other Network Elements and provides appropriate responses. The query originator need not be the owner of LIDB data. LIDB queries include functions such as screening billed numbers that provides the ability to accept Collect or Third Number Billing calls and validation of Telephone Line Number based non-proprietary calling cards. The interface for the LIDB functionality is the interface between BellSouth's CCS network and other CCS networks. LIDB also interfaces to administrative systems.

7.3.2 Technical Requirements

7.3.2.1 BellSouth will offer to Level 3 any additional capabilities that are developed for LIDB during the life of this Agreement.

7.3.2.2 BellSouth shall process Level 3's customer records in LIDB at least at parity with BellSouth customer records, with respect to other LIDB functions. BellSouth shall indicate to Level 3 what additional functions (if any) are performed by LIDB in the BellSouth network.

7.3.2.3 Within two (2) weeks after a request by Level 3, BellSouth shall provide Level 3 with a list of the customer data items, which Level 3 would have to provide in order to support each required LIDB function. The list shall indicate which data items are essential to LIDB function and which are required only to support certain services. For each data item, the list shall show the data formats, the acceptable values of the data item and the meaning of those values.

7.3.2.4 BellSouth shall provide LIDB systems for which operating deficiencies that would result in calls being blocked shall not exceed thirty (30) minutes per year.

7.3.2.5 BellSouth shall provide LIDB systems for which operating deficiencies that would not result in calls being blocked shall not exceed twelve (12) hours per year.

7.3.2.6 BellSouth shall provide LIDB systems for which the LIDB function shall be in overload no more than twelve (12) hours per year.

7.3.2.7 All additions, updates and deletions of Level 3 data to the LIDB shall be solely at the direction of Level 3. Such direction from Level 3 will not be required where the addition, update or deletion is necessary to perform standard fraud control measures (e.g., calling card auto-deactivation).

7.3.2.8 BellSouth shall provide priority updates to LIDB for Level 3 data upon Level 3's request (e.g., to support fraud detection)**,** via password-protected telephone card, facsimile, or electronic mail within one hour of notice from the established BellSouth contact.

7.3.2.9 BellSouth shall provide LIDB systems such that no more than 0.01% of Level 3 customer records will be missing from LIDB, as measured by Level 3 audits. BellSouth will audit Level 3 records in LIDB against Data Base Administration System (DBAS) to identify record mismatches and provide this data to a designated Level 3 contact person to resolve the status of the records and BellSouth will update system appropriately. BellSouth will refer record of mismatches to Level 3 within one (1) business day of audit. Once reconciled records are received back from Level 3, BellSouth will update LIDB the same business day if less than five hundred (500) records are received before 1:00 p.m. Central Time. If more than five hundred (500) records are received, BellSouth will contact Level 3 to negotiate a time frame for the updates, not to exceed three (3) business days.

7.3.2.10 BellSouth shall perform backup and recovery of all of Level 3's data in LIDB including sending to LIDB all changes made since the date of the most recent backup copy, in at least the same time frame BellSouth performs backup and recovery of BellSouth data in LIDB for itself. Currently, BellSouth performs backups of the LIDB for itself on a weekly basis; and when a new software release is scheduled, a backup is performed prior to loading the new release.

7.3.2.11 BellSouth shall provide Level 3 with LIDB reports of data which are missing or contain errors, as well as any misrouted errors, within a reasonable time period as negotiated between Level 3 and BellSouth.

7.3.2.12 BellSouth shall prevent any access to or use of Level 3 data in LIDB by BellSouth personnel that are outside of established administrative and fraud control personnel, or by any other Party that is not authorized by Level 3 in writing.

7.3.2.13 BellSouth shall provide Level 3 performance of the LIDB Data Screening function, which allows a LIDB to completely or partially deny specific query originators access to LIDB data owned by specific data owners, for Customer Data that is part of an NPA-NXX or RAO-0/1XX wholly or partially owned by Level 3 at least at parity with BellSouth Customer Data. BellSouth shall obtain from Level 3 the screening information associated with LIDB Data Screening of Level 3 data in accordance with this requirement. BellSouth currently does not have LIDB Data Screening capabilities. When such capability is available, BellSouth shall offer it to Level 3 under the BFR/NBR Process as set forth in Attachment 11.

7.3.2.14 BellSouth shall accept queries to LIDB associated with Level 3 customer records and shall return responses in accordance with industry standards.

7.3.2.15 BellSouth shall provide mean processing time at the LIDB within 0.50 seconds under normal conditions as defined in industry standards.

7.3.2.16 BellSouth shall provide processing time at the LIDB within one (1) second for ninety-nine percent (99%) of all messages under normal conditions as defined in industry standards.

7.3.3 Interface Requirements

7.3.3.1 BellSouth shall offer LIDB in accordance with the requirements of this subsection.

7.3.3.2 The interface to LIDB shall be in accordance with the technical references contained within.

7.3.3.3 The CCS interface to LIDB shall be the standard interface described herein.

7.3.3.4 The LIDB Data Base interpretation of the ANSI-TCAP messages shall comply with the technical reference herein. Global Title Translation (GTT) shall be maintained in the signaling network in order to support signaling network routing to the LIDB.

7.3.3.5 The application of the LIDB rates contained in Exhibit A will be based on a Percent CLEC LIDB Usage (PCLU) factor. Level 3 shall provide BellSouth a PCLU. The PCLU will be applied to determine the percentage of total LIDB usage to be billed to the other Party at local rates. Level 3 shall update its PCLU on the first of January, April, July and October and shall send it to BellSouth to be received no later than thirty (30) calendar days after the first of each such month based on local usage for the past three months ending the last day of December, March, June and September, respectively. Requirements associated with PCLU calculation and reporting shall be as set forth in BellSouth's Jurisdictional Factors Reporting Guide.

7.4 Signaling. BellSouth shall offer access to signaling and access to BellSouth's signaling databases subject to compatibility testing and at the rates set forth in this Attachment. BellSouth may provide mediated access to BellSouth signaling systems and databases. Available signaling elements include signaling links, STPs and SCPs. Signaling functionality will be available with both A-link and B-link connectivity.

7.4.1 Signaling Link Transport. Signaling Link Transport is a set of two (2) or four (4) dedicated 56 kbps transmission paths between Level 3 designated SPOI that provide appropriate physical diversity.

7.4.1.1 Technical Requirements

7.4.1.1.1 Signaling Link Transport shall consist of full duplex mode 56 kbps transmission paths and shall perform in the following two ways:

7.4.1.1.1.1 As an "A-link" Signaling Link Transport is a connection between a switch or SCP and a home STP switch pair; and

7.4.1.1.1.2 As a "B-link" Signaling Link Transport is a connection between two (2) STP switch pairs in different company networks (e.g., between two (2) STP switch pairs for two (2) CLECs).

7.4.1.2 Signaling Link Transport shall consist of two (2) or more signaling link layers as follows:

7.4.1.2.1 An A-link layer shall consist of two (2) links; and

7.4.1.2.2 A B-link layer shall consist of four (4) links.

7.4.1.3 A signaling link layer shall satisfy interoffice and intraoffice diversity of facilities and equipment, such that:

7.4.1.3.1 No single failure of facilities or equipment causes the failure of both links in an A-link layer (i.e., the links should be provided on a minimum of two (2) separate physical paths end-to-end); and

7.4.1.3.2 No two (2) concurrent failures of facilities or equipment shall cause the failure of all four (4) links in a B-link layer (i.e., the links should be provided on a minimum of three (3) separate physical paths end-to-end).

7.4.2 Interface Requirements. There shall be a DS1 (1.544 Mbps) interface at Level 3's designated SPOIs. Each 56 kbps transmission path shall appear as a DS0 channel within the DS1 interface.

7.4.3 STP. An STP is a signaling network function that includes all of the capabilities provided by the signaling transfer point switches and their associated signaling links that enables the exchange of SS7 messages among and between switching elements, database elements and signaling transfer point switches.

7.4.3.1 Technical Requirements

7.4.3.1.1 STPs shall provide access to BellSouth Local Switching or Tandem Switching and to BellSouth SCPs/Databases connected to BellSouth SS7 network. STPs also provide access to third party local or tandem switching and third party provided STPs.

7.4.3.1.2 The connectivity provided by STPs shall fully support the functions of all other Network Elements connected to the BellSouth SS7 network. This includes the use of the BellSouth SS7 network to convey messages that neither originate nor terminate at a signaling end point directly connected to the BellSouth SS7 network (i.e., transit messages). When the BellSouth SS7 network is used to convey transit

messages, there shall be no alteration of the Integrated Services Digital Network User Part (ISDNUP) or Transaction Capabilities Application Part (TCAP) user data that constitutes the content of the message. Rates for ISDNUP and TCAP messages are as set forth in Exhibit A.

7.4.3.1.3 If a BellSouth tandem switch routes traffic, based on dialed or translated digits, on SS7 trunks between a Level 3 local switch and third party local switch, the BellSouth SS7 network shall convey the TCAP messages that are necessary to provide Call Management features (Automatic Callback, Automatic Recall, and Screening List Editing) between Level 3 local STPs and the STPs that provide connectivity with the third party local switch, even if the third party local switch is not directly connected to BellSouth STPs.

7.4.3.1.4 STPs shall provide all functions of the SCCP necessary for Class 0 (basic connectionless) service as defined in Telcordia ANSI Interconnection Requirements. This includes GTT and SCCP Management procedures, as specified in ANSI T1.112.4. Where the destination signaling point is a Level 3 or third party local or tandem switching system directly connected to BellSouth SS7 network, BellSouth shall perform final GTT of messages to the destination and SCCP Subsystem Management of the destination. In all other cases, BellSouth shall perform intermediate GTT of messages to a gateway pair of STPs in an SS7 network connected with BellSouth SS7 network and shall not perform SCCP Subsystem Management of the destination. If BellSouth performs final GTT to a Level 3 database, then Level 3 agrees to provide BellSouth with the Destination Point Code for Level 3 database.

7.4.3.1.5 STPs shall provide all functions of the Operations, Maintenance and Administration Part (OMAP) as specified in applicable industry standard technical references, which may include, where available in BellSouth's network, MTP Routing Verification Test (MRVT) and SCCP Routing Verification Test (SRVT).

7.4.3.1.6 Where the destination signaling point is a BellSouth local or tandem switching system or database, or is a Level 3 or third party local or tandem switching system directly connected to the BellSouth SS7 network, STPs shall perform MRVT and SRVT to the destination signaling point. In all other cases, STPs shall perform MRVT and SRVT to a gateway pair of STPs in an SS7 network connected with the BellSouth SS7 network. This requirement may be superseded by the specifications for Internetwork MRVT and SRVT when these become approved ANSI standards and available capabilities of BellSouth STPs.

7.4.4 SS7

7.4.4.1 When technically feasible and upon request by Level 3, SS7 AIN Access shall be made available in association with switching. SS7 AIN Access is the provisioning of AIN 0.1 triggers in an equipped BellSouth local switch and interconnection of

the BellSouth SS7 network with Level 3's SS7 network to exchange TCAP queries and responses with a Level 3 SCP.

7.4.4.2 SS7 AIN Access shall provide Level 3 SCP access to an equipped BellSouth local switch via interconnection of BellSouth's SS7 and Level 3 SS7 Networks. BellSouth shall offer SS7 AIN Access through its STPs. If BellSouth requires a mediation device on any part of its network specific to this form of access, BellSouth must route its messages in the same manner. The interconnection arrangement shall result in the BellSouth local switch recognizing the Level 3 SCP as at least at parity with BellSouth's SCPs in terms of interfaces, performance and capabilities.

7.4.4.3 Interface Requirements

7.4.4.3.1 BellSouth shall provide the following STP options to connect Level 3 or Level 3-designated Local Switching systems to the BellSouth SS7 network:

7.4.4.3.1.1 An A-link interface from Level 3 Local Switching systems; and

7.4.4.3.1.2 A B-link interface from Level 3 local STPs.

7.4.4.3.2 Each type of interface shall be provided by one or more layers of signaling links.

7.4.4.3.3 The SPOI for each link shall be located at a cross-connect element in the CO where the BellSouth STP is located. There shall be a DS1 or higher rate transport interface at each of the SPOIs. Each signaling link shall appear as a DS0 channel within the DS1 or higher rate interface.

7.4.4.3.4 BellSouth shall provide intraoffice diversity between the SPOI and BellSouth STPs so that no single failure of intraoffice facilities or equipment shall cause the failure of both B-links in a layer connecting to a BellSouth STP.

7.4.4.3.5 STPs shall provide all functions of the MTP as defined in the applicable industry standard technical references.

7.4.4.4 Message Screening

7.4.4.4.1 BellSouth shall set message screening parameters so as to accept valid messages from Level 3 local or tandem switching systems destined to any signaling point within BellSouth's SS7 network where the Level 3 switching system has a valid signaling relationship.

7.4.4.4.2 BellSouth shall set message screening parameters so as to pass valid messages from Level 3 local or tandem switching systems destined to any signaling point or network accessed through BellSouth's SS7 network where the Level 3 switching system has a valid signaling relationship.

7.4.4.4.3 BellSouth shall set message screening parameters so as to accept and pass/send valid messages destined to and from Level 3 from any signaling point or network interconnected through BellSouth's SS7 network where the Level 3 SCP has a valid signaling relationship.

7.4.5 SCP/Databases

7.4.5.1 Call Related Databases provide the storage of, access to, and manipulation of information required to offer a particular service and/or capability. BellSouth shall provide access to the following Databases: LNP, LIDB, Toll Free Number Database, ALI/DMS, and CNAM Database. BellSouth also provides access to SCE/SMS application databases and DA**.**

7.4.5.2 A SCP is deployed in a SS7 network that executes service application logic in response to SS7 queries sent to it by a switching system also connected to the SS7 network. SMS provides operational interfaces to allow for provisioning, administration and maintenance of subscriber data and service application data stored in SCPs.

7.4.5.3 Technical Requirements for SCPs/Databases

7.4.5.3.1 BellSouth shall provide physical access to SCPs through the SS7 network and protocols with TCAP as the application layer protocol.

7.4.5.3.2 BellSouth shall provide physical interconnection to databases via industry standard interfaces and protocols (e.g., SS7, ISDN and X.25).

7.4.5.3.3 The reliability of interconnection options shall be consistent with requirements for diversity and survivability.

7.5 LNP Database. The Permanent Number Portability (PNP) database supplies routing numbers for calls involving numbers that have been ported from one local service provider to another. BellSouth agrees to provide access to the PNP database at rates, terms and conditions as set forth by BellSouth and in accordance with an effective FCC or Commission directive.

7.6 CNAM Database Service

7.6.1 CNAM is the ability to associate a name with the calling party number, allowing the End User (to which a call is being terminated) to view the calling party's name before the call is answered. The calling party's information is accessed by queries launched to the CNAM database. This service also provides Level 3 the opportunity to load and store its subscriber names in the BellSouth CNAM SCPs.

7.6.2 Level 3 shall submit to BellSouth a notice of its intent to access and utilize BellSouth CNAM Database Services. Said notice shall be in writing no less than

sixty (60) days prior to Level 3's access to BellSouth's CNAM Database Services and shall be addressed to Level 3's Local Contract Manager.

7.6.2.1 Level 3's End Users' names and numbers related to UNE-P Services and shall be stored in the BellSouth CNAM database, and shall be available, on a per query basis only, to all entities that launch queries to the BellSouth CNAM database. BellSouth, at its sole discretion, may opt to interconnect with and query other calling name databases. In the event BellSouth does not query a third party calling name database that stores the calling party's information, BellSouth cannot deliver the calling party's information to a called End User. In addition, BellSouth cannot deliver the calling party's information where the calling party subscribes to any service that would block or otherwise cause the information to be unavailable.

7.6.2.2 For each Level 3 End User that subscribes to a switch based vertical feature providing calling name information to that End User for calls received, BellSouth will launch a query on a per call basis to the BellSouth CNAM database, or, subject to Section 7.6.2.1 above, to a third party calling name database, to provide calling name information, if available, to Level 3's End User. Level 3 shall pay the rates set forth in Exhibit A, on a per query basis, for each query to the BellSouth CNAM database made on behalf of an Level 3 End User that subscribes to the appropriate vertical features that support Caller ID or a variation thereof. In addition, Level 3 shall reimburse BellSouth for any charges BellSouth pays to third party calling name database providers for queries launched to such database providers for the benefit of Level 3's End Users.

7.6.3 BellSouth currently does not have a billing mechanism for CNAM queries. Until a mechanized billing solution is available for CNAM queries, BellSouth shall bill Level 3 at the applicable rates set forth in Exhibit A based on a surrogate of two hundred and fifty-six (256) database queries per month per Level 3's End Users with the Caller ID feature.

7.7 SCE/SMS AIN Access

7.7.1 BellSouth's SCE/SMS AIN Access shall provide Level 3 the capability to create service applications in a BellSouth SCE and deploy those applications in a BellSouth SMS to a BellSouth SCP.

7.7.2 BellSouth's SCE/SMS AIN Access shall provide access to SCE hardware, software, testing and technical support (e.g., help desk, system administrator) resources available to Level 3. Training, documentation, and technical support will address use of SCE and SMS access and administrative functions but will not include support for the creation of a specific service application.

7.7.3 BellSouth SCP shall partition and protect Level 3 service logic and data from unauthorized access.

7.7.4 When Level 3 selects SCE/SMS AIN Access, BellSouth shall provide training, documentation, and technical support to enable Level 3 to use BellSouth's SCE/SMS AIN Access to create and administer applications.

7.7.5 Level 3 access will be provided via remote data connection (e.g., dial-in, ISDN).

7.7.6 BellSouth shall allow Level 3 to download data forms and/or tables to BellSouth SCP via BellSouth SMS without intervention from BellSouth.

## 8 Subloop Elements

8.1 Where facilities permit, BellSouth shall offer access to its Unbundled Subloop (USL) elements as specified herein.

8.2 Unbundled Subloop Distribution (USLD)

8.2.1 The USLD facility is a dedicated transmission facility that BellSouth provides from an End User's point of demarcation to a BellSouth cross-connect device. The BellSouth cross-connect device may be located within a remote terminal (RT) or a stand-alone cross-box in the field or in the equipment room of a building. The USLD media is a copper twisted pair that can be provisioned as a 2-wire or 4-wire facility. BellSouth will make available the following subloop distribution offerings where facilities exist:

USLD – Voice Grade (USLD-VG)
Unbundled Copper Subloop (UCSL)
USLD – Intrabuilding Network Cable (USLD-INC (aka riser cable))

8.2.2 USLD-VG is a copper subloop facility from the cross-box in the field up to and including the point of demarcation at the End User's premises and may have load coils.

8.2.3 UCSL is a copper facility eighteen thousand (18,000) feet or less in length provided from the cross-box in the field up to and including the End User's point of demarcation. If available, this facility will not have any intervening equipment such as load coils between the End User and the cross-box.

8.2.4 If Level 3 requests a UCSL and it is not available, Level 3 may request the copper Subloop facility be modified pursuant to the ULM process to remove load coils and/or excessive bridged taps. If load coils and/or excessive bridged taps are removed, the facility will be classified as a UCSL.

8.2.5 USLD-INC is the distribution facility owned or controlled by BellSouth inside a building or between buildings on the same property that is not separated by a public street or road. USLD-INC includes the facility from the cross-connect

device in the building equipment room up to and including the point of demarcation at the End User's premises.

8.2.6 Upon request for USLD-INC from Level 3, BellSouth will install a cross-connect panel in the building equipment room for the purpose of accessing USLD-INC pairs from a building equipment room. The cross-connect panel will function as a single point of interconnection (SPOI) for USLD-INC and will be accessible by multiple carriers as space permits. BellSouth will place cross-connect blocks in twenty five (25) pair increments for Level 3's use on this cross-connect panel. Level 3 will be responsible for connecting its facilities to the twenty five (25) pair cross-connect block(s).

8.2.7 For access to Voice Grade USLD and UCSL, Level 3 shall install a cable to the BellSouth cross-box pursuant to the terms and conditions for physical collocation for remote sites set forth in Attachment 4. This cable would be connected by a BellSouth technician within the BellSouth cross-box during the set-up process. Level 3's cable pairs can then be connected to BellSouth's USL within the BellSouth cross-box by the BellSouth technician.

8.2.8 Through the SI process, BellSouth will determine whether access to USLs at the location requested by Level 3 is technically feasible and whether sufficient capacity exists in the cross-box. If existing capacity is sufficient to meet Level 3's request, then BellSouth will perform the site set-up as described in the CLEC Information Package, located at BellSouth's Interconnection Web site: www.interconnection.bellsouth.com/products/html/unes.html.

8.2.9 The site set-up must be completed before Level 3 can order Subloop pairs. For the site set-up in a BellSouth cross-connect box in the field, BellSouth will perform the necessary work to splice Level 3's cable into the cross-connect box. For the site set-up inside a building equipment room, BellSouth will perform the necessary work to install the cross-connect panel and the connecting block(s) that will be used to provide access to the requested USLs.

8.2.10 Once the site set-up is complete, Level 3 will request Subloop pairs through submission of a LSR form to the LCSC. OC is required with USL pair provisioning when Level 3 requests reuse of an existing facility, and the OC charge shall be billed in addition to the USL pair rate. For expedite requests by Level 3 for Subloop pairs, expedite charges will apply for intervals less than five (5) days.

8.2.11 SLs will be provided in accordance with BellSouth's TR73600 Unbundled Local Loop Technical Specifications.

8.3 Unbundled Network Terminating Wire (UNTW)

8.3.1 UNTW is unshielded twisted copper wiring that is used to extend circuits from an intra-building network cable terminal or from a building entrance terminal to an individual End User's point of demarcation. It is the final portion of the Loop that in multi-subscriber configurations represents the point at which the network branches out to serve individual subscribers.

8.3.2 This element will be provided in MDUs and/or Multi-Tenants Units (MTUs) where either Party owns wiring all the way to the End User's premises. Neither Party will provide this element in locations where the property owner provides its own wiring to the End User's premises, where a third party owns the wiring to the End User's premises.

8.3.3 Requirements

8.3.3.1 On a multi-unit premises, upon request of the other Party (Requesting Party), the Party owning the network terminating wire (Provisioning Party) will provide access to UNTW pairs on an Access Terminal that is suitable for use by multiple carriers at each Garden Terminal or Wiring Closet.

8.3.3.2 The Provisioning Party shall not be required to install new or additional NTW beyond existing NTW to provision the services of the Requesting Party.

8.3.3.3 In existing MDUs and/or MTUs in which BellSouth does not own or control wiring (INC/NTW) to the End Users premises, and Level 3 does own or control such wiring, Level 3 will install UNTW Access Terminals for BellSouth under the same terms and conditions as BellSouth provides UNTW Access Terminals to Level 3.

8.3.3.4 In situations in which BellSouth activates a UNTW pair, BellSouth will compensate Level 3 for each pair activated commensurate to the price specified in Level 3's Agreement.

8.3.3.5 Upon receipt of the UNTW SI requesting access to the Provisioning Party's UNTW pairs at a multi-unit premises, representatives of both Parties will participate in a meeting at the site of the requested access. The purpose of the site visit will include discussion of the procedures for installation and location of the Access Terminals. By request of the Requesting Party, an Access Terminal will be installed either adjacent to each of the Provisioning Party's Garden Terminal or inside each Wiring Closet. The Requesting Party will deliver and connect its central office facilities to the UNTW pairs within the Access Terminal. The Requesting Party may access any available pair on an Access Terminal. A pair is available when a pair is not being utilized to provide service or where the End User has requested a change in its local service provider to the Requesting Party. Prior

to connecting the Requesting Party's service on a pair previously used by the Provisioning Party, the Requesting Party is responsible for ensuring the End User is no longer using the Provisioning Party's service or another CLEC's service before accessing UNTW pairs.

8.3.3.6 Access Terminal installation intervals will be established on an individual case basis.

8.3.3.7 The Requesting Party is responsible for obtaining the property owner's permission for the Provisioning Party to install an Access Terminal(s) on behalf of the Requesting Party. The submission of the SI by the Requesting Party will serve as certification by the Requesting Party that such permission has been obtained. If the property owner objects to Access Terminal installations that are in progress or within thirty (30) days after completion and demands removal of Access Terminals, the Requesting Party will be responsible for costs associated with removing Access Terminals and restoring the property to its original state prior to Access Terminals being installed.

8.3.3.8 The Requesting Party shall indemnify and hold harmless the Provisioning Party against any claims of any kind that may arise out of the Requesting Party's failure to obtain the property owner's permission. The Requesting Party will be billed for nonrecurring and recurring charges for accessing UNTW pairs at the time the Requesting Party activates the pair(s). The Requesting Party will notify the Provisioning Party within five (5) business days of activating UNTW pairs using the LSR form.

8.3.3.9 If a trouble exists on a UNTW pair, the Requesting Party may use an alternate spare pair that serves that End User if a spare pair is available. In such cases, the Requesting Party will re-terminate its existing jumper from the defective pair to the spare pair. Alternatively, the Requesting Party will isolate and report troubles in the manner specified by the Provisioning Party. The Requesting Party must tag the UNTW pair that requires repair. If the Provisioning Party dispatches a technician on a reported trouble call and no UNTW trouble is found, the Provisioning Party will charge Requesting Party for time spent on the dispatch and testing the UNTW pair(s).

8.3.3.10 If the Requesting Party initiates the Access Terminal installation and the Requesting Party has not activated at least ten percent (10%) of the capacity of the Access Terminal installed pursuant to the Requesting Party's request for an Access Terminal within six (6) months of installation of the Access Terminal, the Provisioning Party will bill the Requesting Party a nonrecurring charge equal to the actual cost of provisioning the Access Terminal.

8.3.3.11 If the Provisioning Party determines that the Requesting Party is using the UNTW pairs without reporting the activation of the pairs, the Requesting Party will be

billed for the use of that pair back to the date the End User began receiving service from the Requesting Party at that location. Upon request, the Requesting Party will provide copies of its billing record to substantiate such date. If the Requesting Party fails to provide such records, then the Provisioning Party will bill the Requesting Party back to the date of the Access Terminal installation.

| UNBUNDLED NETWORK ELEMENTS - Mississippi | | | | | | | | | | | | | | Att: 2 Exh: B | | | |
|---|---|---|---|---|---|---|---|---|---|---|---|---|---|---|---|---|---|
| CATEGORY | | RATE ELEMENTS | Interim | Zone | BCS | USOC | RATES($) | | | | | Svc Order Submitted Elec per LSR | Svc Order Submitted Manually per LSR | Incremental Charge - Manual Svc Order vs. Electronic-1st | Incremental Charge - Manual Svc Order vs. Electronic-Add'l | Incremental Charge - Manual Svc Order vs. Electronic-Disc 1st | Incremental Charge - Manual Svc Order vs. Electronic-Disc Add'l |
| | | | | | | | Rec | Nonrecurring | | Nonrecurring Disconnect | | OSS Rates($) | | | | | |
| | | | | | | | | First | Add'l | First | Add'l | SOMEC | SOMAN | SOMAN | SOMAN | SOMAN | SOMAN |
| COMMINGLING | | | | | | | | | | | | | | | | | |
| | | Commingling Authorization | | | UNCVX UNCDX UNC1X UNC3X UNCSX U1TD1 U1TD3 U1TS1 UE3 UDLSX U1TVX U1TDX U1TUB ULDVX ULDD1 ULDD3 ULDS1 | CMGAU | 0.00 | 0.00 | 0.00 | 0.00 | 0.00 | | | | | | |
| | Commingled (UNE part of single bandwidth circuit) | | | | | | | | | | | | | | | | |
| | | Commingled VG COCI | | | XDV2X NTCVG | 1D1VG | 0.5737 | 6.62 | 4.74 | | | | | | | | |
| | | Commingled Digital COCI | | | XDV6X NTCUD | 1D1DD | 1.22 | 6.62 | 4.74 | | | | | | | | |
| | | Commingled ISDN COCI | | | XDD4X | UC1CA | 2.62 | 6.62 | 4.74 | | | | | | | | |
| | | Commingled 2-wire VG Interoffice Channel | | | XDV2X | U1TV2 | 20.32 | 40.77 | 27.57 | 17.26 | 7.11 | | | | | | |
| | | Commingled 4-wire VG Interoffice Channel | | | XDV6X | U1TV4 | 17.86 | 40.77 | 27.57 | 17.26 | 7.11 | | | | | | |
| | | Commingled 56kbps Interoffice Channel | | | XDD4X | U1TD5 | 14.14 | 40.77 | 27.57 | 17.26 | 7.11 | | | | | | |
| | | Commingled 64kbps Interoffice Channel | | | XDD4X | U1TD6 | 14.14 | 40.77 | 27.57 | 17.26 | 7.11 | | | | | | |
| | | Commingled VG/DS0 Interoffice Channel Mileage | | | XDV2X XDV6X XDD4X | 1L5XX | 0.0088 | | | | | | | | | | |
| | | Commingled 2-wire Local Loop Zone 1 | | 1 | XDV2X | UEAL2 | 13.89 | 105.96 | 68.28 | 52.82 | 10.37 | | | | | | |
| | | Commingled 2-wire Local Loop Zone 2 | | 2 | XDV2X | UEAL2 | 18.75 | 105.96 | 68.28 | 52.82 | 10.37 | | | | | | |
| | | Commingled 2-wire Local Loop Zone 3 | | 3 | XDV2X | UEAL2 | 27.55 | 105.96 | 68.28 | 52.82 | 10.37 | | | | | | |
| | | Commingled 2-wire Local Loop Zone 4 | | 4 | XDV2X | UEAL2 | 45.72 | 105.96 | 68.28 | 52.82 | 10.37 | | | | | | |
| | | Commingled 4-wire Local Loop Zone 1 | | 1 | XDV6X | UEAL4 | 27.47 | 132.27 | 94.59 | 60.68 | 14.64 | | | | | | |
| | | Commingled 4-wire Local Loop Zone 2 | | 2 | XDV6X | UEAL4 | 38.26 | 132.27 | 94.59 | 60.68 | 14.64 | | | | | | |
| | | Commingled 4-wire Local Loop Zone 3 | | 3 | XDV6X | UEAL4 | 50.03 | 132.27 | 94.59 | 60.68 | 14.64 | | | | | | |
| | | Commingled 4-wire Local Loop Zone 4 | | 4 | XDV6X | UEAL4 | 50.03 | 132.27 | 94.59 | 60.68 | 14.64 | | | | | | |
| | | Commingled 56kbps Local Loop Zone 1 | | 1 | XDD4X | UDL56 | 27.44 | 126.53 | 88.85 | 60.68 | 14.64 | | | | | | |
| | | Commingled 56kbps Local Loop Zone 2 | | 2 | XDD4X | UDL56 | 34.55 | 126.53 | 88.85 | 60.68 | 14.64 | | | | | | |
| | | Commingled 56kbps Local Loop Zone 3 | | 3 | XDD4X | UDL56 | 40.76 | 126.53 | 88.85 | 60.68 | 14.64 | | | | | | |
| | | Commingled 56kbps Local Loop Zone 4 | | 4 | XDD4X | UDL56 | 32.25 | 126.53 | 88.85 | 60.68 | 14.64 | | | | | | |
| | | Commingled 64kbps Local Loop Zone 1 | | 1 | XDD4X | UDL64 | 27.44 | 126.53 | 88.85 | 60.68 | 14.64 | | | | | | |
| | | Commingled 64kbps Local Loop Zone 2 | | 2 | XDD4X | UDL64 | 34.55 | 126.53 | 88.85 | 60.68 | 14.64 | | | | | | |
| | | Commingled 64kbps Local Loop Zone 3 | | 3 | XDD4X | UDL64 | 40.76 | 126.53 | 88.85 | 60.68 | 14.64 | | | | | | |
| | | Commingled 64kbps Local Loop Zone 4 | | 4 | XDD4X | UDL64 | 32.25 | 126.53 | 88.85 | 60.68 | 14.64 | | | | | | |
| | | Commingled ISDN Local Loop Zone 1 | | 1 | XDD4X | U1L2X | 21.01 | 117.61 | 79.92 | 52.82 | 10.37 | | | | | | |
| | | Commingled ISDN Local Loop Zone 2 | | 2 | XDD4X | U1L2X | 27.59 | 117.61 | 79.92 | 52.82 | 10.37 | | | | | | |
| | | Commingled ISDN Local Loop Zone 3 | | 3 | XDD4X | U1L2X | 37.34 | 117.61 | 79.92 | 52.82 | 10.37 | | | | | | |
| | | Commingled ISDN Local Loop Zone 4 | | 4 | XDD4X | U1L2X | 59.18 | 117.61 | 79.92 | 52.82 | 10.37 | | | | | | |
| | | Commingled DS1 COCI | | | XDH1X NTCD1 | UC1D1 | 12.96 | 6.62 | 4.74 | | | | | | | | |
| | | Commingled DS1 Interoffice Channel | | | XDH1X | U1TF1 | 57.33 | 89.79 | 82.28 | 16.86 | 14.90 | | | | | | |
| | | Commingled DS1 Interoffice Channel Mileage | | | XDH1X | 1L5XX | 0.1813 | | | | | | | | | | |
| | | Commingled DS1/DS0 Channel System | | | XDH1X | MQ1 | 102.85 | 91.57 | 62.94 | 10.87 | 10.10 | | | | | | |
| | | Commingled DS1 Local Loop Zone 1 | | 1 | XDH1X | USLXX | 79.08 | 253.93 | 158.45 | 46.10 | 12.07 | | | | | | |
| | | Commingled DS1 Local Loop Zone 2 | | 2 | XDH1X | USLXX | 129.38 | 253.93 | 158.45 | 46.10 | 12.07 | | | | | | |
| | | Commingled DS1 Local Loop Zone 3 | | 3 | XDH1X | USLXX | 206.74 | 253.93 | 158.45 | 46.10 | 12.07 | | | | | | |
| | | Commingled DS1 Local Loop Zone 4 | | 4 | XDH1X | USLXX | 458.46 | 253.93 | 158.45 | 46.10 | 12.07 | | | | | | |
| | | Commingled DS3 Local Loop | | | HFQC6 | UE3PX | 326.15 | 454.13 | 265.47 | 123.23 | 86.19 | | | | | | |
| | | Commingled DS3/STS-1 Local Loop Mileage | | | HFQC6 HFRST | 1L5ND | 11.20 | | | | | | | | | | |
| | | Commingled STS-1 Local Loop | | | HFRST | UDLS1 | 338.55 | 454.13 | 265.47 | 123.23 | 86.19 | | | | | | |
| | | Commingled DS3/DS1 Channel System | | | HFQC6 | MQ3 | 170.63 | 179.17 | 94.52 | 34.30 | 32.82 | | | | | | |
| | | Commingled DS3 Interoffice Channel | | | HFQC6 | U1TF3 | 641.90 | 280.37 | 163.70 | 62.08 | 60.29 | | | | | | |
| | | Commingled DS3 Interoffice Channel Mileage | | | HFQC6 | 1L5XX | 4.29 | | | | | | | | | | |
| | | Commingled STS-1Interoffice Channel | | | HFRST | U1TFS | 644.21 | 280.37 | 163.70 | 62.08 | 60.29 | | | | | | |
| | | Commingled STS-1Interoffice Channel Mileage | | | HFRST | 1L5XX | 4.29 | | | | | | | | | | |
| | | Commingled Dark Fiber - Interoffice Transport, Per Four Fiber Strands, Per Route Mile Or Fraction Thereof | | | HEQDL | 1L5DF | 28.27 | | | | | | | | | | |

| UNBUNDLED NETWORK ELEMENTS - Mississippi | | | | | | | | | | | | | | Att: 2 Exh: B | | | |
|---|---|---|---|---|---|---|---|---|---|---|---|---|---|---|---|---|---|
| CATEGORY | | RATE ELEMENTS | Interim | Zone | BCS | USOC | RATES($) | | | | | Svc Order Submitted Elec per LSR | Svc Order Submitted Manually per LSR | Incremental Charge - Manual Svc Order vs. Electronic-1st | Incremental Charge - Manual Svc Order vs. Electronic-Add'l | Incremental Charge - Manual Svc Order vs. Electronic-Disc 1st | Incremental Charge - Manual Svc Order vs. Electronic-Disc Add'l |
| | | | | | | | Rec | Nonrecurring | | Nonrecurring Disconnect | | OSS Rates($) | | | | | |
| | | | | | | | | First | Add'l | First | Add'l | SOMEC | SOMAN | SOMAN | SOMAN | SOMAN | SOMAN |
| | | Commingled Dark Fiber - Interoffice Transport, Per Four Fiber Strands, Per Route Mile Or Fraction Thereof | | | HEQDL | UDF14 | | 642.79 | 138.67 | 326.97 | 203.85 | | | | | | |
| | | UNE to Commingled Conversion Tracking | | | XDH1X HFQC6 | CMGUN | 0.00 | 0.00 | 0.00 | 0.00 | 0.00 | | | | | | |
| | | SPA to Commingled Conversion Tracking | | | XDH1X HFQC6 | CMGSP | 0.00 | 0.00 | 0.00 | 0.00 | 0.00 | | | | | | |
| **ADDITIONAL NETWORK ELEMENTS** | | | | | | | | | | | | | | | | | |
| | **Optional Features & Functions:** | | | | | | | | | | | | | | | | |
| | | Wholesale - UNE, Switch-As-Is Conversion Charge | | | UNCNX UNCVX UNCDX UNC1X UNC3X UNCSX UDFCX XDH1X HFQC6 XDD2X XDV6X XDDFX XDD4X HFRST | UNCCC | | 5.63 | 5.63 | | | | | | | | |
| | | Unbundled Misc Rate Element, SNE SAI, Single Network Element - Switch As Is Non-recurring Charge, per circuit (LSR) | I | | U1TVX U1TDX U1TD1 U1TD3 U1TS1 UDF UE3 | URESL | | 40.22 | 13.50 | | | | | | | | |
| | | Unbundled Misc Rate Element, SNE SAI, Single Network Element - Switch As Is Non-recurring Charge, incremental charge per circuit on a spreadsheet | I | | U1TVX U1TDX U1TD1 U1TD3 U1TS1 UDF UE3 | URESP | | 63.98 | 25.59 | | | | | | | | |
| **UNBUNDLED EXCHANGE ACCESS LOOP** | | | | | | | | | | | | | | | | | |
| | **2-WIRE ANALOG VOICE GRADE LOOP** | | | | | | | | | | | | | | | | |
| | | Switch-As-Is Conversion rate per UNE Loop, Single LSR, (per DS0) | | | UEA | URESL | | 25.01 | 3.53 | | | | | | | | |
| | | Switch-As-Is Conversion rate per UNE Loop, Spreadsheet, (per DS0) | | | UEA | URESP | | 26.50 | 5.02 | | | | | | | | |
| | **4-WIRE ANALOG VOICE GRADE LOOP** | | | | | | | | | | | | | | | | |
| | | Switch-As-Is Conversion rate per UNE Loop, Single LSR, (per DS0) | | | UEA | URESL | | 25.01 | 3.53 | | | | | | | | |
| | | Switch-As-Is Conversion rate per UNE Loop, Spreadsheet, (per DS0) | | | UEA | URESP | | 26.50 | 5.02 | | | | | | | | |
| | **4-WIRE DS1 DIGITAL LOOP** | | | | | | | | | | | | | | | | |
| | | Switch-As-Is Conversion rate per UNE Loop, Single LSR, (per DS1) | | | USL | URESL | | 25.01 | 3.53 | | | | | | | | |
| | | Switch-As-Is Conversion rate per UNE Loop, Spreadsheet, (per DS1) | | | USL | URESP | | 26.50 | 5.02 | | | | | | | | |
| | **4-WIRE 19.2, 56 OR 64 KBPS DIGITAL GRADE LOOP** | | | | | | | | | | | | | | | | |
| | | Switch-As-Is Conversion rate per UNE Loop, Single LSR, (per DS0) | | | UDL | URESL | | 25.01 | 3.53 | | | | | | | | |
| | | Switch-As-Is Conversion rate per UNE Loop, Spreadsheet, (per DS0) | | | UDL | URESP | | 26.50 | 5.02 | | | | | | | | |
| **UNE LOOP COMMINGLING** | | | | | | | | | | | | | | | | | |
| | **2-WIRE ANALOG VOICE GRADE LOOP - COMMINGLING** | | | | | | | | | | | | | | | | |
| | | 2-Wire Analog Voice Grade Loop - Service Level 2 w/Loop or Ground Start Signaling - Zone 1 | | 1 | NTCVG | UEAL2 | 13.89 | 105.96 | 68.28 | 52.82 | 10.37 | | | | | | |
| | | 2-Wire Analog Voice Grade Loop - Service Level 2 w/Loop or Ground Start Signaling - Zone 2 | | 2 | NTCVG | UEAL2 | 18.75 | 105.96 | 68.28 | 52.82 | 10.37 | | | | | | |
| | | 2-Wire Analog Voice Grade Loop - Service Level 2 w/Loop or Ground Start Signaling - Zone 3 | | 3 | NTCVG | UEAL2 | 27.55 | 105.96 | 68.28 | 52.82 | 10.37 | | | | | | |
| | | 2-Wire Analog Voice Grade Loop - Service Level 2 w/Loop or Ground Start Signaling - Zone 4 | | 4 | NTCVG | UEAL2 | 45.72 | 105.96 | 68.28 | 52.82 | 10.37 | | | | | | |
| | | 2-Wire Analog Voice Grade Loop - Service Level 2 w/Reverse Battery Signaling - Zone 1 | | 1 | NTCVG | UEAR2 | 13.89 | 105.96 | 68.28 | 52.82 | 10.37 | | | | | | |
| | | 2-Wire Analog Voice Grade Loop - Service Level 2 w/Reverse Battery Signaling - Zone 2 | | 2 | NTCVG | UEAR2 | 18.75 | 105.96 | 68.28 | 52.82 | 10.37 | | | | | | |
| | | 2-Wire Analog Voice Grade Loop - Service Level 2 w/Reverse Battery Signaling - Zone 3 | | 3 | NTCVG | UEAR2 | 27.55 | 105.96 | 68.28 | 52.82 | 10.37 | | | | | | |
| | | 2-Wire Analog Voice Grade Loop - Service Level 2 w/Reverse Battery Signaling - Zone 4 | | 4 | NTCVG | UEAR2 | 45.72 | 105.96 | 68.28 | 52.82 | 10.37 | | | | | | |

**UNBUNDLED NETWORK ELEMENTS - Mississippi** — Att: 2 Exh: B

| CATEGORY | | RATE ELEMENTS | Interim | Zone | BCS | USOC | RATES($) | | | | | Svc Order Submitted Elec per LSR | Svc Order Submitted Manually per LSR | Incremental Charge - Manual Svc Order vs. Electronic- 1st | Incremental Charge - Manual Svc Order vs. Electronic- Add'l | Incremental Charge - Manual Svc Order vs. Electronic- Disc 1st | Incremental Charge - Manual Svc Order vs. Electronic- Disc Add'l |
|---|---|---|---|---|---|---|---|---|---|---|---|---|---|---|---|---|---|
| | | | | | | | Rec | Nonrecurring | | Nonrecurring Disconnect | | OSS Rates($) | | | | | |
| | | | | | | | | First | Add'l | First | Add'l | SOMEC | SOMAN | SOMAN | SOMAN | SOMAN | SOMAN |
| | | Switch-As-Is Conversion rate per UNE Loop, Single LSR, (per DS0) | | | NTCVG | URESL | | 25.01 | 3.53 | | | | | | | | |
| | | Switch-As-Is Conversion rate per UNE Loop, Spreadsheet, (per DS0) | | | NTCVG | URESP | | 26.50 | 5.02 | | | | | | | | |
| | | Unbundled Loop Service Rearrangement, change in loop facility, per circuit | | | NTCVG | UREWO | | 87.56 | 36.29 | | | | | | | | |
| | | Loop Tagging - Service Level 2 (SL2) | | | NTCVG | URETL | | 11.19 | 1.10 | | | | | | | | |
| | | | | | NTCVG | | | | | | | | | | | | |
| | **4-WIRE ANALOG VOICE GRADE LOOP - COMMINGLING** | | | | | | | | | | | | | | | | |
| | | 4-Wire Analog Voice Grade Loop - Zone 1 | | 1 | NTCVG | UEAL4 | 27.47 | 132.27 | 94.59 | 60.68 | 14.64 | | | | | | |
| | | 4-Wire Analog Voice Grade Loop - Zone 2 | | 2 | NTCVG | UEAL4 | 38.26 | 132.27 | 94.59 | 60.68 | 14.64 | | | | | | |
| | | 4-Wire Analog Voice Grade Loop - Zone 3 | | 3 | NTCVG | UEAL4 | 50.03 | 132.27 | 94.59 | 60.68 | 14.64 | | | | | | |
| | | 4-Wire Analog Voice Grade Loop - Zone 4 | | 4 | NTCVG | UEAL4 | 50.03 | 132.27 | 94.59 | 60.68 | 14.64 | | | | | | |
| | | Switch-As-Is Conversion rate per UNE Loop, Single LSR, (per DS0) | | | NTCVG | URESL | | 25.01 | 3.53 | | | | | | | | |
| | | Switch-As-Is Conversion rate per UNE Loop, Spreadsheet, (per DS0) | | | NTCVG | URESP | | 26.50 | 5.02 | | | | | | | | |
| | | Unbundled Loop Service Rearrangement, change in loop facility, per circuit | | | NTCVG | UREWO | | 87.56 | 36.29 | | | | | | | | |
| | **4-WIRE DS1 DIGITAL LOOP** | | | | | | | | | | | | | | | | |
| | | 4-Wire DS1 Digital Loop - Zone 1 | | 1 | NTCD1 | USLXX | 79.08 | 253.93 | 158.45 | 46.10 | 12.07 | | | | | | |
| | | 4-Wire DS1 Digital Loop - Zone 2 | | 2 | NTCD1 | USLXX | 129.38 | 253.93 | 158.45 | 46.10 | 12.07 | | | | | | |
| | | 4-Wire DS1 Digital Loop - Zone 3 | | 3 | NTCD1 | USLXX | 206.74 | 253.93 | 158.45 | 46.10 | 12.07 | | | | | | |
| | | 4-Wire DS1 Digital Loop - Zone 4 | | 4 | NTCD1 | USLXX | 458.46 | 253.93 | 158.45 | 46.10 | 12.07 | | | | | | |
| | | Switch-As-Is Conversion rate per UNE Loop, Single LSR, (per DS1) | | | NTCD1 | URESL | | 25.01 | 3.53 | | | | | | | | |
| | | Switch-As-Is Conversion rate per UNE Loop, Spreadsheet, (per DS1) | | | NTCD1 | URESP | | 26.50 | 5.02 | | | | | | | | |
| | | Unbundled Loop Service Rearrangement, change in loop facility, per circuit | | | NTCD1 | UREWO | | 100.90 | 42.96 | | | | | | | | |
| | **4-WIRE 19.2, 56 OR 64 KBPS DIGITAL GRADE LOOP** | | | | | | | | | | | | | | | | |
| | | 4 Wire Unbundled Digital Loop 2.4 Kbps-Zone 1 | | 1 | NTCUD | UDL2X | 27.44 | 126.53 | 88.85 | 60.68 | 14.64 | | | | | | |
| | | 4 Wire Unbundled Digital Loop 2.4 Kbps - Zone 2 | | 2 | NTCUD | UDL2X | 34.55 | 126.53 | 88.85 | 60.68 | 14.64 | | | | | | |
| | | 4 Wire Unbundled Digital Loop 2.4 Kbps - Zone 3 | | 3 | NTCUD | UDL2X | 40.76 | 126.53 | 88.85 | 60.68 | 14.64 | | | | | | |
| | | 4 Wire Unbundled Digital Loop 2.4 Kbps - Zone 4 | | 4 | NTCUD | UDL2X | 32.25 | 126.53 | 88.85 | 60.68 | 14.64 | | | | | | |
| | | 4 Wire Unbundled Digital Loop 4.8 Kbps - Zone 1 | | 1 | NTCUD | UDL4X | 27.44 | 126.53 | 88.85 | 60.68 | 14.64 | | | | | | |
| | | 4 Wire Unbundled Digital Loop 4.8 Kbps - Zone 2 | | 2 | NTCUD | UDL4X | 34.55 | 126.53 | 88.85 | 60.68 | 14.64 | | | | | | |
| | | 4 Wire Unbundled Digital Loop 4.8 Kbps - Zone 3 | | 3 | NTCUD | UDL4X | 40.76 | 126.53 | 88.85 | 60.68 | 14.64 | | | | | | |
| | | 4 Wire Unbundled Digital Loop 4.8 Kbps - Zone 4 | | 4 | NTCUD | UDL4X | 32.25 | 126.53 | 88.85 | 60.68 | 14.64 | | | | | | |
| | | 4 Wire Unbundled Digital Loop 9.6 Kbps - Zone 1 | | 1 | NTCUD | UDL9X | 27.44 | 126.53 | 88.85 | 60.68 | 14.64 | | | | | | |
| | | 5 Wire Unbundled Digital Loop 9.6 Kbps - Zone 2 | | 2 | NTCUD | UDL9X | 34.55 | 126.53 | 88.85 | 60.68 | 14.64 | | | | | | |
| | | 6 Wire Unbundled Digital Loop 9.6 Kbps - Zone 3 | | 3 | NTCUD | UDL9X | 40.76 | 126.53 | 88.85 | 60.68 | 14.64 | | | | | | |
| | | 7 Wire Unbundled Digital Loop 9.6 Kbps - Zone 4 | | 4 | NTCUD | UDL9X | 32.25 | 126.53 | 88.85 | 60.68 | 14.64 | | | | | | |
| | | 4 Wire Unbundled Digital 19.2 Kbps - Zone 1 | | 1 | NTCUD | UDL19 | 27.44 | 126.53 | 88.85 | 60.68 | 14.64 | | | | | | |
| | | 4 Wire Unbundled Digital 19.2 Kbps - Zone 2 | | 2 | NTCUD | UDL19 | 34.55 | 126.53 | 88.85 | 60.68 | 14.64 | | | | | | |
| | | 4 Wire Unbundled Digital 19.2 Kbps - Zone 3 | | 3 | NTCUD | UDL19 | 40.76 | 126.53 | 88.85 | 60.68 | 14.64 | | | | | | |
| | | 4 Wire Unbundled Digital 19.2 Kbps - Zone 4 | | 4 | NTCUD | UDL19 | 32.25 | 126.53 | 88.85 | 60.68 | 14.64 | | | | | | |
| | | 4 Wire Unbundled Digital Loop 56 Kbps - Zone 1 | | 1 | NTCUD | UDL56 | 27.44 | 126.53 | 88.85 | 60.68 | 14.64 | | | | | | |
| | | 4 Wire Unbundled Digital Loop 56 Kbps - Zone 2 | | 2 | NTCUD | UDL56 | 34.55 | 126.53 | 88.85 | 60.68 | 14.64 | | | | | | |
| | | 4 Wire Unbundled Digital Loop 56 Kbps - Zone 3 | | 3 | NTCUD | UDL56 | 40.76 | 126.53 | 88.85 | 60.68 | 14.64 | | | | | | |
| | | 4 Wire Unbundled Digital Loop 56 Kbps - Zone 4 | | 4 | NTCUD | UDL56 | 32.25 | 126.53 | 88.85 | 60.68 | 14.64 | | | | | | |
| | | 4 Wire Unbundled Digital Loop 64 Kbps - Zone 1 | | 1 | NTCUD | UDL64 | 27.44 | 126.53 | 88.85 | 60.68 | 14.64 | | | | | | |
| | | 4 Wire Unbundled Digital Loop 64 Kbps - Zone 2 | | 2 | NTCUD | UDL64 | 34.55 | 126.53 | 88.85 | 60.68 | 14.64 | | | | | | |
| | | 4 Wire Unbundled Digital Loop 64 Kbps - Zone 3 | | 3 | NTCUD | UDL64 | 40.76 | 126.53 | 88.85 | 60.68 | 14.64 | | | | | | |
| | | 4 Wire Unbundled Digital Loop 64 Kbps - Zone 4 | | 4 | NTCUD | UDL64 | 32.25 | 126.53 | 88.85 | 60.68 | 14.64 | | | | | | |
| | | Switch-As-Is Conversion rate per UNE Loop, Single LSR, (per DS0) | | | NTCUD | URESL | | 25.01 | 3.53 | | | | | | | | |

| UNBUNDLED NETWORK ELEMENTS - Mississippi | | | | | | | | | | | | | | Att: 2 Exh: B | | | |
|---|---|---|---|---|---|---|---|---|---|---|---|---|---|---|---|---|---|
| CATEGORY | | RATE ELEMENTS | Interim | Zone | BCS | USOC | RATES($) | | | | | Svc Order Submitted Elec per LSR | Svc Order Submitted Manually per LSR | Incremental Charge - Manual Svc Order vs. Electronic- 1st | Incremental Charge - Manual Svc Order vs. Electronic- Add'l | Incremental Charge - Manual Svc Order vs. Electronic- Disc 1st | Incremental Charge - Manual Svc Order vs. Electronic- Disc Add'l |
| | | | | | | | Rec | Nonrecurring | | Nonrecurring Disconnect | | OSS Rates($) | | | | | |
| | | | | | | | | First | Add'l | First | Add'l | SOMEC | SOMAN | SOMAN | SOMAN | SOMAN | SOMAN |
| | | Switch-As-Is Conversion rate per UNE Loop, Spreadsheet, (per DS0) | | | NTCUD | URESP | | 26.50 | 5.02 | | | | | | | | |
| | | Unbundled Loop Service Rearrangement, change in loop facility, per circuit | | | NTCUD | UREWO | | 101.94 | 49.66 | | | | | | | | |
| | | Order Coordination for Specified Conversion Time (per LSR) | | | NTCVG NTCUD NTCD1 | OCOSL | | 18.19 | | | | | | | | | |

**Amendment to the Agreement**
**Between**
**Level 3 Communications, L.L.C.**
**and**
**BellSouth Telecommunications, Inc. d/b/a AT&T Georgia**
**Dated June 23, 2004**

Pursuant to this Amendment, (the "Amendment"), Level 3 Communications, L.L.C. (Level 3), and BellSouth Telecommunications, Inc. d/b/a AT&T Georgia, hereinafter referred to collectively as the "Parties", hereby agree to amend that certain Interconnection Agreement between the Parties dated June 23, 2004 ("Agreement").

WHEREAS, AT&T Georgia and Level 3 have entered into good faith negotiations pursuant to the Act to renegotiate an interconnection agreement (New Agreement) to replace the existing Agreement between the Parties, which expired on June 22, 2007; and

WHEREAS, the Parties desire to extend the term of the Agreement; and

WHEREAS, on March 2, 2006, the Georgia Public Service Commission (Commission) issued its Order in Docket No. 19341-U (Change of Law Order), Proceeding to Consider Amendments to Interconnection Agreements Between AT&T Georgia and certified Competitive Local Exchange Carriers (CLECs) due to Changes of Law; and

WHEREAS, on March 10, 2006, the Commission issued its Order Setting Rates Under Section 271 in Docket No. 19341-U (271 Order); and

WHEREAS, on March 24, 2006, the Commission issued its Order on Reconsideration of the March 10, 2006 Order Setting Rates Under Section 271 in Docket No. 19341-U (271 Reconsideration Order); and

WHEREAS, on January 3, 2008, the United States District Court for the Northern District of Georgia issued its Order in BellSouth Telecommunications, Inc., v. The Georgia Public Service Commission, No. 1:06-CV-00162-CC and Competitive Carriers of the South, Inc. v. The Georgia Public Service Commission, No. 1:06-CV-00972-CC (District Court Order) finding portions of the Change of Law Order, the 271 Order and the 271 Reconsideration Order unlawful in that the PSC lacks authority to implement Section 271 or to set rates for facilities and services required under Section 271 of the Act; and

WHEREAS, the Parties are obligated to amend the Agreement to bring it in compliance with the District Court Order; and

NOW, THEREFORE, in consideration of the mutual provisions contained herein and other good and valuable consideration, the receipt and sufficiency of which are hereby acknowledged, the Parties hereby covenant and agree as follows:

1. The Parties hereby agree to extend the term of the Agreement by ninety (90) days following the date of the last signature of this Amendment. Other than the modification of

the expiration date as described in this Amendment, all provisions in Section 2 of the General Terms and Conditions of the Agreement relating to the term and termination of the Agreement remain in full force and effect.

2. The Parties hereby agree to delete from the Amendment to the Agreement in its entirety the 271 Requirements in Section 28 and Line Sharing in Section 28.3 of Exhibit A and any references to the 271 Requirements or Line Sharing in Section 28 and 28.3 of Exhibit A. Such contract provisions shall no longer apply to services provided in the State of Georgia.

3. The Parties hereby agree to delete the portions of Exhibit B which includes the rates for Georgia 271 elements and Line Sharing and to delete any references to Georgia 271 rates and/or Line Sharing rates set forth in Exhibit B thereto. Such rates shall no longer apply to services provided in the State of Georgia.

4. Further, to the extent that defined terms in this Amendment differ from defined terms in the Agreement, such defined terms in the Agreement shall be deemed to have the same meaning as the alternative defined terms in this Amendment to the extent necessary to give full effect to this Amendment consistent with the District Court Order.

5. This Amendment shall be shall be deemed effective on January 3, 2008 (”Effective Date”).

6. As soon as practicable after January 3, 2008, AT&T Georgia will identify the Loop and Transport circuits no longer offered pursuant to this Agreement. Level 3, within thirty (30) days from receipt of the circuit list from AT&T Georgia, shall submit a Local Service Request (LSR) or spreadsheet(s) to convert such circuits to an equivalent AT&T tariffed service or to disconnect such circuits. For LSRs or spreadsheets submitted by Level 3 within such thirty (30) day period, AT&T Georgia will charge the applicable switch-as-is charge set forth in Exhibit A. If Level 3 fails to submit LSRs or spreadsheets to disconnect or convert such circuits within such thirty (30) day period, AT&T Georgia will transition such circuits to the equivalent tariffed AT&T service(s), and shall charge Level 3 all applicable disconnect charges as set forth in this Agreement and the full nonrecurring charges for installation of the equivalent tariffed AT&T service as set forth in AT&T tariffs. For all transitions that require a physical rearrangement, AT&T Georgia shall charge any applicable nonrecurring installation charges. If no tariff equivalent service exists, AT&T Georgia shall disconnect such circuits, and Level 3 shall pay applicable disconnect charges set forth in the Agreement.

7. AT&T Georgia shall not seek to bill applicable access charges for the converted or transitioned circuits for the period prior to January 3, 2008. For Embedded Base Loops or Embedded Base Transport circuits, to the extent the circuit converted/transitioned or disconnected is an Unbundled Network Element (UNE) pursuant to Section 251 of the Act at the time of conversion/transition, AT&T Georgia shall recover from Level 3 (1) the difference between the rate previously billed for that circuit and the applicable 271 rate established by the Commission in the 271 Order for the period from March 11, 2006 through January 2, 2008; and (2) the difference between the rate previously billed for that circuit and the applicable tariffed service rate for the period from January 3, 2008, through the date of conversion/transition or disconnection of the circuit. For Loops and Transport

circuits ordered and provisioned in an unimpaired wire center on or after March 11, 2005, to the extent the circuit converted/transitioned or disconnected is an UNE pursuant to Section 251 of the Act at the time of conversion/transition, AT&T Georgia shall recover from Level 3 (1) the difference between the rate previously billed for that circuit and the applicable 271 rate established by the Commission in the 271 Order for the period from date of installation of such circuit through January 2, 2008, and (2) the difference between the rate previously billed for that circuit and the applicable tariffed service rate for the period from January 3, 2008, through the date of conversion/transition or disconnection of the circuit. To the extent the circuit converted/transitioned is a 271 element at the time of conversion/transition, AT&T Georgia shall recover from Level 3 the difference between the rate previously billed for that circuit and the applicable tariffed service rate for the period from January 3, 2008, through the date of conversion/transition or disconnection of the circuit.

8. All of the other provisions of the Agreement shall remain in full force and effect.

9. Either or both of the Parties are authorized to submit this Amendment to the respective state regulatory authorities for approval subject to Section 252(e) of the Federal Telecommunications Act of 1996.

**Level 3 Communications, L.L.C.**

By: Jamie Moyer

Name: Jamie Moyer

Title: Senior Director, Interconnection Services

Date: 2.28-08

**BellSouth Telecommunications, Inc.**
**d/b/a AT&T Alabama, AT&T Florida, AT&T Georgia, AT&T Kentuck , AT&T Louisiana, AT&T Mississippi, AT&T North Carolina, AT&T South Carolina and AT&T Tennessee**

By: Kristen E. Shore

Name: Kristen E. Shore

Title: Director

Date: 3/5/08

| | OCN # | ACNA | | OCN # | ACNA |
|---|---|---|---|---|---|
| ALABAMA | | | MISSISSIPPI | | |
| FLORIDA | | | NORTH CAROLINA | | |
| GEORGIA | | | SOUTH CAROLINA | | |
| KENTUCKY | | | TENNESSEE | | |
| LOUISIANA | | | | | |

# Amendment to the Agreement Between Level 3 Communications, L.L.C. and BellSouth Telecommunications, Inc. d/b/a AT&T Kentucky Dated June 23, 2004

This Amendment amends the Interconnection Agreement by and between Level 3 Communications, L.L.C. (Level 3), and BellSouth Telecommunications, Inc. d/b/a AT&T Kentucky ("AT&T"). AT&T and Level 3 are hereinafter referred to collectively as the "Parties" and individually as a "Party". This Amendment applies in AT&T's service territory in the State of Kentucky.

**WITNESSETH**:

**WHEREAS**, AT&T and Level 3 are Parties to an Interconnection Agreement under Sections 251 and 252 of the Communications Act of 1934, as amended (the "Act"), dated June 23, 2004 (the "Agreement"); and

**WHEREAS,** on December 12, 2007, the Kentucky Public Service Commission (Commission) issued its Order in Case No. 2004-00427 (Change of Law) Proceeding to Consider Amendments to Interconnection Agreements Resulting from Changes of Law; and

**WHEREAS,** the Parties are obligated to amend the Agreement to bring it in compliance with the Commission's Change of Law Order ("Order"); and

**NOW, THEREFORE**, in consideration of the promises and mutual agreements set forth herein, the Parties agree to amend the Agreement as follows:

1. **AT&T-9STATE** shall be defined as the states of Alabama, Florida, Georgia, Kentucky, Louisiana, Mississippi, North Carolina, South Carolina and Tennessee.

2. The Parties agree that Attachment 2 of the Agreement should be amended by the addition of the terms and conditions set forth in the Kentucky Change of Law Amendment Exhibit A attached hereto, and such contract provisions shall apply to services provided in the State of Kentucky only.

3. Exhibit A of Attachment 2 of the Agreement should be amended by the addition of the rates set forth in the Kentucky Change of Law Amendment Exhibit B attached hereto, and such rates shall apply to services provided in the State of Kentucky only.

4. Conflict between this Amendment and the Agreement. This Amendment shall be deemed to revise the terms and provisions of the Agreement only to the extent necessary to give effect to the terms and provisions of this Amendment. In the event of a conflict between the terms and provisions of this Amendment and the terms and provisions of the Agreement, this Amendment shall govern, *provided, however,* that the fact that a term or provision appears in this Amendment but not in the Agreement, or

in the Agreement but not in this Amendment, shall not be interpreted as, or deemed grounds for finding, a conflict for purposes of this Section 4.

5. Counterparts. This Amendment may be executed in one or more counterparts, each of which when so executed and delivered shall be an original and all of which together shall constitute one and the same instrument.

6. Captions. The Parties acknowledge that the captions in this Amendment have been inserted solely for convenience of reference and in no way define or limit the scope or substance of any term or provision of this Amendment.

7. Scope of Amendment. This Amendment shall amend, modify and revise the Agreement only to the extent set forth expressly in Sections 2 and 3 of this Amendment. Nothing in this Amendment shall be deemed to amend or extend the term of the Agreement, or to affect the right of a Party to exercise any right of termination it may have under the Agreement. Nothing in this Amendment shall affect the general application and effectiveness of the Agreement's "change of law," "intervening law", "successor rates" and/or any similarly purposed provisions. The rights and obligations set forth in this Amendment apply in addition to any other rights and obligations that may be created by such intervening law, change in law or other substantively similar provision.

8. This Amendment may require that certain sections of the Agreement shall be replaced and/or modified by the provisions set forth in this Amendment. The Parties agree that such replacement and/or modification shall be accomplished without the necessity of physically removing and replacing or modifying such language throughout the Agreement.

9. This Amendment shall be shall be deemed effective on March 11, 2006 ("Effective Date").

10. Reservation of Rights. In entering into this Amendment, neither Party waives, and each Party expressly reserves, any rights, remedies or arguments it may have at law or under the intervening law or regulatory change provisions in the underlying Agreement (including intervening law rights asserted by either Party via written notice predating this Amendment) with respect to any orders, decisions, legislation or proceedings and any remands thereof, which the Parties have not yet fully incorporated into this Agreement or which may be the subject of further review.

**Level 3 Communications, L.L.C.**

By: Jamie Mayer

Name: Jamie Mayer

Title: Senior Director, Interconnection Services

Date: 4-16-08

**BellSouth Telecommunications, Inc.**
**d/b/a AT&T Kentucky**

By: Kristen E. Shore

Name: Kristen E. Shore

Title: Director

Date: 4/23/08

| | **OCN #** | **ACNA** |
|---|---|---|
| KENTUCKY | _____ | _____ |

**Issue 2 – What is the appropriate manner in which to transition to post-TRRO arrangements?**

**1. Transition for DS1 and DS3 Loops**

1.1 For purposes of this Section 1, the Transition Period for the Embedded Base of DS1 and DS3 Loops and for the Excess DS1 and DS3 Loops is the twelve (12) month period beginning March 11, 2005 and ending March 10, 2006.

1.2 For purposes of this Section 1, Embedded Base means DS1 and DS3 Loops that were in service for Level 3 as of March 11, 2005 in those wire centers that, as of such date, met the criteria set forth in Section 1.4.1 and 1.4.2. Subsequent disconnects or loss of End Users shall be removed from the Embedded Base.

1.3 Excess DS1 and DS3 Loops are those Level 3 DS1 and DS3 Loops in service as of March 11, 2005, in excess of the caps set forth in Sections 1.3.1 and 1.3.2 below, respectively. Subsequent disconnects or loss of End Users shall be removed from Excess DS1 and DS3 Loops.

1.3.1 Level 3 may obtain a maximum of ten (10) unbundled DS1 Loops to any single building in which such Loops are still subject to unbundling requirements.

1.3.2 Level 3 may obtain a maximum of one (1) Unbundled DS3 Loop to any single building in which such Loops are still subject to unbundling requirements.

1.4 Notwithstanding anything to the contrary in this Agreement, and except as set forth in Section 8, AT&T shall make available the following DS1 and DS3 Loops only for Level 3's Embedded Base during the Transition Period:

1.4.1 Unbundled DS1 Loops to any Building served by a wire center containing 60,000 or more Business Lines and four (4) or more fiber-based collocators

1.4.2 Unbundled DS3 Loops at any Building served by a wire center containing 38,000 or more Business Lines and four (4) or more fiber-based collocators.

1.5 A list of wire centers meeting the criteria set forth in Sections 1.4.1 and 1.4.2 above, is set forth in Accessible Letter CLECSE08-015 which is available on the AT&T CLEC Online Web site.

1.6 Transition Period Pricing. From March 11, 2005, through the expiration of the Transition Period, AT&T shall charge/collect a rate for Level 3's Embedded Base and Level 3's Excess DS1 and DS3 Loops equal to the higher of:

1.6.1 115% of the rate paid for that element on June 15, 2004; or

1.6.2 115% of a new rate the Commission establishes, if any, between June 16, 2004 and March 11, 2005.

1.6.3 These rates shall be as set forth in Exhibit A to Attachment 2 of the Agreement and this Section 1.6.

1.7 The Transition Period shall apply only to (1) Level 3's Embedded Base and (2) Level 3's Excess DS1 and DS3 Loops. Level 3 shall not add new DS1 or DS3 loops pursuant to this Agreement.

1.8 Once a wire center meets or exceeds both of the thresholds set forth in Section 1.4.1 above, no future DS1 Loop unbundling will be required in that wire center.

1.9 Once a wire center meets or exceeds both of the thresholds set forth in Section 1.4.2 above, no future DS3 Loop unbundling will be required in that wire center.

1.10 No later than March 10, 2006, Level 3 shall submit spreadsheet(s) identifying all of the Embedded Base of circuits and Excess DS1 and DS3 Loops to be either disconnected or converted to other AT&T services. The Parties shall negotiate a project schedule for the Conversion of the Embedded Base and Excess DS1 and DS3 Loops.

1.11 If Level 3 failed to submit the spreadsheet(s) for its Embedded Base and Excess DS1 and DS3 Loops on or before March 10, 2006, AT&T will identify Level 3's remaining Embedded Base and Excess DS1 and DS3 Loops, if any, and will transition such circuits to the equivalent wholesale services provided by AT&T. Those circuits identified and transitioned by AT&T pursuant to this Section shall be subject to the switch-as-is rates set forth in this Agreement for conversions to equivalent tariffed services.

1.12 For Embedded Base circuits and Excess DS1 and DS3 Loops converted or transitioned, the applicable recurring tariff charge shall apply to each circuit as of March 11, 2006. The transition of the Embedded Base and Excess DS1 and DS3 Loops should be performed in a manner that avoids, or otherwise minimizes to the extent possible, disruption or degradation to Level 3's customers' service.

**2. Dark Fiber Loop**

2.1 Dark Fiber Loop is an unused optical transmission facility, without attached signal regeneration, multiplexing, aggregation or other electronics, from the demarcation point at an End User's premises to the End User's serving wire center. Dark Fiber Loops may be strands of optical fiber existing in aerial or underground structure. AT&T will not provide line terminating elements, regeneration or other electronics necessary for Level 3 to utilize Dark Fiber Loops.

2.2 Transition for Dark Fiber Loop

2.2.1 For purposes of this Section 2.2, the Transition Period for Dark Fiber Loops is the eighteen (18) month period beginning March 11, 2005 and ending September 10, 2006.

2.2.2 For purposes of this Section 2.2, Embedded Base means Dark Fiber Loops that were in service for Level 3 as of March 11, 2005. Subsequent disconnects or loss of End Users shall be removed from the Embedded Base.

2.2.3 During the Transition Period only, AT&T shall make available for the Embedded Base Dark Fiber Loops for Level 3 at the terms and conditions set forth in this Amendment.

2.2.4 Transition Period Pricing. From March 11, 2005, through the completion of the Transition Period,

AT&T shall charge a rate for Level 3's Embedded Base of Dark Fiber Loops equal to the higher of:

2.2.4.1 115% of the rate paid for that element on June 15, 2004; or

2.2.4.2 115% of a new rate the Commission establishes, if any, between June 16, 2004 and March 11, 2005.

2.2.4.3 These rates shall be as set forth in Exhibit A to Attachment 2 of the Agreement and this Section 2.2.4.

2.2.4.4 The Transition Period shall apply only to Level 3's Embedded Base and Level 3 shall not add new Dark Fiber Loops pursuant to this Agreement.

2.2.5 Effective September 11, 2006, Dark Fiber Loops shall no longer be made available pursuant to this Agreement.

2.2.6 Level 3 shall submit spreadsheets to AT&T no later than September 10, 2006, identifying the specific Dark Fiber Loops, to be either disconnected or converted to other AT&T services. Level 3 may transition from Dark Fiber Loops to other available wholesale facilities provided by AT&T, including special access, wholesale facilities obtained from other carriers, or self-provisioned facilities. For Conversions as defined in Section 12, such spreadsheets shall take the place of an LSR or ASR. The Parties shall negotiate a project schedule for the Conversion of the Embedded Base Dark Fiber Loops. In the case of disconnection, the applicable disconnect charges set forth in this Agreement shall apply.

2.2.6.1 If Level 3 fails to submit the spreadsheet(s) specified in Section 2.2.6 above for all of its Embedded Base on or before September 10, 2006, AT&T will identify Level 3's remaining Embedded Base, if any, and will transition such circuits to the equivalent tariffed AT&T service(s). Those circuits identified and transitioned by AT&T pursuant to this Section 2.2.6.1 shall be subject to the switch-as-is rates set forth in this Agreement for conversions to equivalent tariffed services.

2.2.6.2 For Embedded Base circuits converted or transitioned, the applicable recurring tariff charge shall apply to each circuit as of September 11, 2006. The transition of the Embedded Base circuits should be performed in a manner that avoids, or otherwise minimizes to the extent possible, disruption or degradation to Level 3's customers' service.

**3. Local Switching**

3.1 Local Switching is not available pursuant to this Agreement.

**4. Dedicated Transport and Dark Fiber Transport**

4.1 Dedicated Transport. Dedicated Transport is defined as AT&T's transmission facilities between wire centers or switches owned by AT&T, or between wire centers or switches owned by AT&T and switches owned by Level 3, including but not limited to DS1, DS3 and OCn level services, as well as dark fiber, dedicated to Level 3. AT&T shall not be required to provide access to OCn level Dedicated Transport under any circumstances pursuant to this Agreement. In addition, except as set forth in Section 4.2 below, AT&T shall not be required to provide to Level 3 unbundled access

to interoffice transmission facilities that do not connect a pair of wire centers or switches owned by AT&T ("Entrance Facilities").

4.2 Transition for DS1 and DS3 Dedicated Transport Including DS1 and DS3 Entrance Facilities

4.2.1 For purposes of this Section 4.2, the Transition Period for the Embedded Base of DS1 and DS3 Dedicated Transport, Embedded Base Entrance Facilities and for Excess DS1 and DS3 Dedicated Transport, is the twelve (12) month period beginning March 11, 2005 and ending March 10, 2006.

4.2.2 For purposes of this Section 4.2, Embedded Base means DS1 and DS3 Dedicated Transport that were in service for Level 3 as of March 11, 2005 in those wire centers that, as of such date, met the criteria set forth in Sections 4.2.6.1 or 4.2.6.2 below. Subsequent disconnects or loss of End Users shall be removed from the Embedded Base.

4.2.3 For purposes of this Section 4.2, Embedded Base Entrance Facilities means Entrance Facilities that were in service for Level 3 as of March 11, 2005. Subsequent disconnects or loss of customers shall be removed from the Embedded Base.

4.2.4 For purposes of this Section 4.2, Excess DS1 and DS3 Dedicated Transport means those Level 3 DS1 and DS3 Dedicated Transport facilities in service as of March 11, 2005, in excess of the caps set forth in Section 4.2.6.3. Subsequent disconnects and loss of End Users shall be removed from Excess DS1 and DS3 Loops.

4.2.5 For purposes of this Section 4.2, a Business Line is as defined in 47 C.F.R. §51.5.

4.2.6 Notwithstanding anything to the contrary in this Agreement, AT&T shall make available the following Dedicated Transport as described in this Section 4.2 only for Level 3's Embedded Base and Excess Dedicated Transport during the Transition Period:

4.2.6.1 DS1 Transport where both wire centers at the end points of the route contain at least four (4) fiber-based collocators or at least 38,000 Business access lines.

4.2.6.2 DS3 Transport where both wire centers at the end points of the route contain at least three (3) fiber-based collocators or at least 24,000 Business access lines.

4.2.6.3 Level 3 may obtain a maximum of twelve (12) unbundled DS3 Dedicated Transport circuits on each route where DS3 Dedicated Transport is available as a Network Element, and a maximum of ten (10) unbundled DS1 Dedicated Transport circuits on each Route where there is no 251(c)(3) unbundling obligation for DS3 Dedicated Transport but for which impairment exists for DS1 Dedicated Transport.

4.2.7 The Initial Unimpaired Wire Center List setting forth the wire centers meeting the criteria set forth in Sections 4.2.6.1 and 4.2.6.2 above is set forth in Accessible Letter CLECSE08-01, which is available on AT&T's CLEC Online Web site.

4.2.8 Notwithstanding anything to the contrary in this Agreement, AT&T shall make available Entrance Facilities only for Level 3's Embedded Base Entrance Facilities and only during the Transition Period.

4.2.9 Transition Period Pricing. From March 11, 2005, through the completion of the Transition Period, AT&T shall charge/collect a rate for Level 3's Embedded Base of DS1 and DS3 Dedicated Transport and for Level 3's Excess DS1 and DS3 Dedicated Transport, as described in this Section 4.2, equal to the higher of:

4.2.9.1 115% of the rate paid for that element on June 15, 2004; or

4.2.9.2 115% of a new rate the Commission establishes, if any, between June 16, 2004 and March 11, 2005.

4.2.9.3 These rates shall be as set forth in Exhibit A to Attachment 2 of the Agreement and this Section 4.2.9.

4.2.9.4 From March 11, 2005, through the completion of the Transition Period, AT&T shall charge/collect a rate for Level 3's Embedded Base Entrance Facilities as set forth in Exhibit A to Attachment 2 of the Agreement and this Section 4.2.9.

4.2.10 The Transition Period shall apply only to (1) Level 3's Embedded Base and Embedded Base Entrance Facilities; and (2) Level 3's Excess DS1 and DS3 Dedicated Transport. Level 3 shall not add new Entrance Facilities pursuant to this Agreement. Further, Level 3 shall not add new DS1 or DS3 Dedicated Transport as described in this Section 4.2 pursuant to this Agreement.

4.2.11 Once a wire center exceeds either of the thresholds set forth in Section 4.2.6.1 above, no future DS1 Dedicated Transport unbundling will be required in that wire center.

4.2.12 Once a wire center exceeds either of the thresholds set forth in Section 4.2.6.2 above, no future DS3 Dedicated Transport will be required in that wire center.

4.2.13 No later than March 11, 2006 or some other mutually agreed upon date, Level 3 shall submit spreadsheet(s) identifying all of the Embedded Base of circuits, Embedded Base Entrance Facilities, and Excess DS1 and DS3 Dedicated Transport to be either disconnected or converted to other AT&T services pursuant to Section 12 below. The Parties shall negotiate a project schedule for the Conversion of the Embedded Base, Embedded Base Entrance Facilities and Excess DS1 and DS3 Dedicated Transport. In the case of disconnection, the applicable disconnect charges set forth in this Agreement shall apply.

4.2.14 If Level 3 failed to submit the spreadsheet(s) identifying its Embedded Base DS1 and DS3 Dedicated Transport circuits, Embedded Base Entrance Facilities and Excess DS1 and DS3 Dedicated Transport on or before March 10, 2006, AT&T will identify Level 3's remaining Embedded Base DS1 and DS3 Dedicated Transport circuits, Embedded Base Entrance Facilities and Excess DS1 and DS3 Dedicated Transport, if any, and will transition such circuits to the equivalent tariffed AT&T service(s). Those circuits identified and transitioned by AT&T pursuant to this Section shall be subject to the switch-as-is rates set forth in this Agreement for conversions to equivalent tariffed services.

4.2.15 For Embedded Base DS1 and DS3 Dedicated Transport circuits, Embedded Base Entrance Facilities and Excess DS1 and DS3 Dedicated Transport converted or transitioned, the applicable recurring tariff charge shall apply to each circuit as of March 11, 2006. The transition of the Embedded Base DS1 and DS3 Dedicated Transport, Embedded Base Entrance Facilities and Excess DS1 and DS3 Dedicated Transport should be performed in a manner that avoids, or

otherwise, minimizes to the extent possible, disruption or degradation to Level 3's customers' service.

4.3 Dark Fiber Transport. Dark Fiber Transport is defined as Dedicated Transport that consists of inactivated optical interoffice transmission facilities without attached signal regeneration, multiplexing, aggregation or other electronics. Except as set forth in Section 4.3.1 below, AT&T shall not be required to provide access to Dark Fiber Transport Entrance Facilities pursuant to this Agreement.

4.3.1 Transition for Dark Fiber Transport and Dark Fiber Transport Entrance Facilities

4.3.2 For purposes of this Section 4.3, the Transition Period for the Embedded Base Dark Fiber Transport and Embedded Base Dark Fiber Entrance Facilities is the eighteen (18) month period beginning March 11, 2005 and ending September 10, 2006.

4.3.3 For purposes of this Section 4.3, Embedded Base means Dark Fiber Transport that was in service for Level 3 as of March 11, 2005 in those wire centers that, as of such date, met the criteria set forth in 4.3.5 below. Subsequent disconnects or loss of End Users shall be removed from the Embedded Base.

4.3.4 Notwithstanding anything to the contrary in this Agreement, AT&T shall make available the following Dark Fiber Transport as described in this Section 4.3.1 only for Level 3's Embedded Base during the Transition Period:

4.3.5 Dark Fiber Transport where both wire centers at the end points of the route contain twenty-four thousand (24,000) or more Business Lines or three (3) or more fiber-based collocators.

4.3.6 The Initial Unimpaired Wire Center List setting forth the wire centers meeting the criteria set forth in Section 4.3.5 above is set forth in Accessible Letter CLECSE08-015, which is available on AT&T's CLEC Online Web site.

4.3.7 Transition Period Pricing. From March 11, 2005, through the completion of the Transition Period, AT&T shall charge/collect a rate for Level 3's Embedded Base of Dark Fiber and Embedded Base Dark Fiber Transport Entrance Facilities equal to the higher of:

4.3.7.1 115% of the rate paid for that element on June 15, 2004; or

4.3.7.2 115% of a new rate the Commission establishes, it any, between June 16, 2004 and March 11, 2005.

4.3.7.3 These rates shall be as set forth in Exhibit A to Attachment 2 of the Agreement and this Section 4.3.7.

4.3.8 The Transition Period shall apply only to Level 3's Embedded Base of Dark Fiber Transport and Dark Fiber Entrance Facilities. Level 3 shall not add new Dark Fiber Transport as described in this Section 4.3. Level 3 shall not add new Dark Fiber Entrance Facilities pursuant to this Agreement.

4.3.9 Once a wire center exceeds either of the thresholds set forth in Section 4.3.5 above, no future Dark Fiber Transport unbundling will be required in that wire center.

4.3.10 No later than September 10, 2006 Level 3 shall submit spreadsheet(s) identifying all of the Embedded Base of Dark Fiber Transport and Dark Fiber Entrance Facilities to be either disconnected or converted to other AT&T services as Conversions pursuant to Section 12. The Parties shall negotiate a project schedule for the Conversion of the Embedded Base of Dark Fiber Transport and Dark Fiber Entrance Facilities.

4.3.11 If Level 3 fails to submit the spreadsheet(s) for all of its Embedded Base of Dark Fiber Transport and Dark Fiber Entrance Facilities prior to September 10, 2006, AT&T will identify Level 3's remaining Embedded Base of Dark Fiber Transport and Dark Fiber Entrance Facilities, if any, and will transition such circuits to the equivalent tariffed AT&T service(s). Those circuits identified and transitioned by AT&T pursuant to this Section shall be subject to the switch-as-is rates set forth in this Agreement for conversions to equivalent tariffed services.

4.3.12 For Embedded Base of Dark Fiber Transport and Embedded Base Dark Fiber Entrance Facilities converted or transitioned, the applicable recurring tariff charge shall apply to each circuit as of September 11, 2006.

**5.** Prior to submitting an order pursuant to this Agreement for high capacity (DS1 or above) Dedicated Transport or high capacity Loops, Level 3 shall undertake a reasonably diligent inquiry to determine whether Level 3 is entitled to unbundled access to such Network Elements in accordance with the terms of this Agreement. By submitting any such order, Level 3 self-certifies that to the best of Level 3's knowledge, the high capacity Dedicated Transport or high capacity Loop requested is available as a Network Element pursuant to this Agreement. Upon receiving such order, AT&T shall process the request in reliance upon Level 3's self-certification. To the extent AT&T believes that such request does not comply with the terms of this Agreement, AT&T shall seek dispute resolution in accordance with the General Terms and Conditions of this Agreement. If AT&T prevails in such dispute resolution proceeding, Level 3 shall be liable to AT&T for the difference between the rate for the equivalent AT&T alternative arrangement and the self certified UNE, plus interest, on such rate differential.

5.1 In the event that (1) AT&T designates a wire center as non-impaired, (2) Level 3 converts existing UNEs to other services or orders new services as services other than UNEs, (3) Level 3 otherwise would have been entitled to UNEs in such wire center at the time alternative services provisioned, and (4) AT&T acknowledges or a state or federal agency regulatory body with authority determines that, at the time AT&T designated such wire center as non-impaired, such wire center did not meet the FCC's non-impairment criteria, then upon request of Level 3, AT&T shall transition to UNEs any alternative services in such wire center that were established after such wire center was designated as non-impaired. In such instances, AT&T shall refund Level 3 the difference between the rate paid by Level 3 for such services and the applicable UNE rate, including but not limited to any charges associated with the unnecessary conversion from UNE to other wholesale services.

**6.** AT&T will not accept UNE orders for de-listed high capacity Loops or Dedicated Transport elements, as applicable, in the wire centers set forth on the Initial Unimpaired Wire Center List

**Issue 4 – What is the appropriate language to implement AT&T's obligation to provide Section 251 unbundled access to high-capacity loops and dedicated transport and how should the following terms be defined? (i) Business Line; (ii) Fiber-Based Collocator; (iii) Building (iv) route; (v) Is a CLEC entitled to obtain DS3 transport from a Tier 3 wire center to each of two or more Tier 1 or Tier 2 wire centers? (vi) is a CLEC entitled to obtain dark fiber transport from a Tier 3 wire center to each of two or more Tier 1 or Tier 2 wire centers?**

**7.** (i) Business Line

7.1 For purposes of this Amendment, a "Business Line" is, as defined in 47 C.F.R. § 51.5.

7.2 (ii) Fiber-Based Collocation

7.2.1 For purposes of this Amendment, a "Fiber-Based Collocator" is, as defined in 47 C.F.R. § 51.5 and the AT&T/BellSouth Merger Order.

7.3 (iii) Building

7.3.1 A "Building" is defined as a permanent physical structure including, but not limited to, a structure in which people reside, conduct business or work on a daily basis and which has a unique street address assigned to it. As an example only, a high rise office building with a general telecommunications equipment room through which all telecommunications services to that building's tenants must pass would be a single "building" for purposes of this Amendment. With respect to multi-tenant property with a single street address, an individual tenant's space shall constitute one "building" for purposes of this Amendment (1) if the multi-tenant structure is subject to separate ownership of each tenant's space, or (2) if the multi-tenant structure is under single ownership and there is no centralized point of entry in the structure through which all telecommunications services must transit. For instance, a strip mall with individual businesses obtaining telecommunication services from different access points on the building(s) will be considered individual buildings, even though they might share common walls. A building for purposes of this Amendment does not include convention centers, arenas, exposition halls, and other locations that are routinely used for special events of limited duration.

7.4 (iv) Route

7.4.1 For purposes of this Amendment, a "Route" is defined as a transmission path between one of AT&T's wire centers or switches and another of AT&T's wire centers or switches. A route between two (2) points may pass through one or more intermediate wire centers or switches. Transmission paths between identical end points are the same "route", irrespective of whether they pass through the same intermediate wire centers or switches, if any.

**Issue 5 – a) Does the Commission have the authority to determine whether or not AT&T's application of the FCC's Section 251 non-impairment criteria for high-capacity loops and transport is appropriate?**

**b) What procedures should be used to identify those wire centers that satisfy the FCC's Section 251 non-impairment criteria for high-capacity loops and transport?**

**c) What language should be included in agreements to reflect the procedures identified in (b)?**

**8. Procedures for Additional Designations of "Non-Impaired" Wire Centers**

8.1 If AT&T seeks to designate additional wire centers as "non-impaired" for purposes of the FCC's Triennial Review Remand Order (TRRO), AT&T shall file with the Commission a proposed list of any new "non-impaired" wire centers on April 1 of each year (coincident with its filing of ARMIS 43-08 data with the FCC). The list of additional "non-impaired" wire centers filed by AT&T will reflect

the number of Business Lines and fiber-based collocators, as of December 31 of the previous year, in each wire center that AT&T proposes be considered "non-impaired."

8.2 Designation by AT&T of additional "non-impaired" wire centers will be based on the following criteria:

a. The CLLI of the wire center.
b. The number of switched business lines served by AT&T in that wire center based upon data as reported in ARMIS 43-08 for the previous year.
c. The sum of all UNE Loops connected to each wire center, including UNE Loops provisioned in combination with other elements.
d. A completed worksheet that shows, in detail, any conversion of access lines to voice grade equivalents.
e. The names of any carriers relied upon as fiber-based collocators.

8.3 Level 3 shall have until May 1 to file a challenge to any new wire center named by AT&T in any such April 1 filing.

8.4 AT&T and Level 3 agree to resolve disputes concerning AT&T's additional wire center designations in dispute resolution proceedings before the Commission.

8.5 Changes to wire center designations shall become effective July 1 following the April 1 filing by AT&T to the extent that such changes are approved by the Commission by that date.

8.6 Level 3 shall have 120 days from July 1 to submit spreadsheets to disconnect or convert to other services all noncompliant circuits in such additional unimpaired wire centers. All such conversions will be subject to applicable disconnect charges set forth in this Agreement for requests to disconnect circuits, or to switch-as-is charges set forth in this Agreement for conversions to equivalent tariffed services. If Level 3 fails to submit such spreadsheet within the 120 day period, AT&T will identify and convert noncompliant circuits to equivalent tariffed services, and such conversion shall be subject to all applicable disconnect charges as set forth in this Agreement and the full nonrecurring charges for installation of the equivalent tariffed AT&T services as set forth in AT&T's tariffs. Recurring charges for such tariffed services shall apply as of July 1.

**Issue 8 – (a) Does the Commission have the authority to require AT&T to include in its ICAs entered into pursuant to Section 252, network elements either under state law or pursuant to Section 271 or any other federal law other than Section 251? (b) If the answer to part (a) is affirmative in any respect, does the Commission have the authority to establish rates for such element? (c) If the answer to part (a) or (b) is affirmative in any respect, (i) what language, if any should be included in the ICA with regard to the rates for such elements, and (ii) what language, if any, should be included in the ICA with regard to the terms and conditions of such elements?**

**9.** This Attachment 2 Exhibit A sets forth rates, terms and conditions for unbundled network elements (Network Elements) and combinations of Network Elements (Combinations) that AT&T offers to

Level 3 for Level 3's provision of Telecommunications Services in accordance with its obligations under Section 251(c)(3) of the Act. Any facilities or services AT&T is obligated to offer pursuant to Section 271 of the Act will be available pursuant to applicable tariffs or a separately negotiated agreement.

**Issue 10 – Transition of De-listed Network elements to Which No Specified Transition Period Applies. What rates terms and conditions should govern the transition of existing network elements that AT&T is no longer obligated to provide as Section 251 UNEs to non-Section 251 network elements and other services and (a) what is the proper treatment for such network elements at the end of the transition period,; and (b) what is the appropriate transition period, and what are the appropriate rates, terms and conditions during such transition period, for unbundled high-capacity loops, high capacity transport, and dark fiber transport in and between wire centers that do not meet the FCC's non-impairment standards at this time, but that meet such standards in the future?**

**10.** Except to the extent expressly provided otherwise in this Attachment, Level 3 may not maintain unbundled network elements or combinations of unbundled network elements that are no longer offered pursuant to this Amendment (collectively "Arrangements"). In the event AT&T determines that Level 3 has in place any Arrangements after the Effective Date of this Amendment, AT&T shall provide notice to the point of contact set forth in the General Terms and Conditions of this Agreement identifying those Arrangements that are no longer available pursuant to this Agreement. Level 3 shall have thirty (30) days from the date of such notice to transition all Local Switching and UNE-P arrangements and sixty (60) days to transition all other Arrangements. Those circuits identified by Level 3 within such thirty (30) or sixty (60) day period, as applicable, shall be subject to applicable disconnect or switch-as-is charges pursuant to this Agreement. If Level 3 fails to submit orders to disconnect or convert such Arrangements within the aforementioned timeframes, AT&T will transition such circuits to the equivalent tariffed AT&T service(s). The applicable recurring tariff charges shall apply to each circuit as of the Effective Date of this Amendment.

**Issue 14 – What is the scope of commingling allowed under the FCC's rules and orders and what language should be included in Interconnection Agreements to implement commingling (including rates)?**

**11. Commingling of Services**

11.1 Commingling means the connecting, attaching, or otherwise linking of a Network Element, or a Combination, to one or more Telecommunications Services or facilities that Level 3 has obtained at wholesale from AT&T, or the combining of a Network Element or Combination with one or more such wholesale Telecommunications Services or facilities, including those services or facilities available pursuant to Section 271 of the Act. Level 3 must comply with all rates, terms or conditions applicable to such wholesale Telecommunications Services or facilities.

11.2 Subject to the limitations set forth elsewhere in this Attachment, AT&T shall not deny access to a Network Element or a Combination on the grounds that one or more of the elements: 1) is connected to, attached to, linked to, or combined with such a facility or service obtained from AT&T; or 2) shares part of AT&T's network with access services or inputs for mobile wireless services and/or interexchange services.

11.3 Unless otherwise agreed to by the Parties, the Network Element portion of a commingled circuit will be billed at the rates set forth in Exhibit A of Attachment 2 and the remainder of the circuit or service will be billed in accordance with AT&T's tariffed rates or rates set forth in a separate agreement between the Parties.

11.4 When multiplexing equipment is attached to a commingled arrangement, the multiplexing equipment will be billed from the same agreement or the tariff as the higher bandwidth circuit. Central Office Channel Interfaces (COCI) will be billed from the same agreement or tariff as the lower bandwidth circuit.

**Issue 15 – Is AT&T required to provide conversion of special access circuits to UNE pricing, and, if so, what rates, terms and conditions and during what timeframe should such new requests for such conversions be effectuated?**

**12. Conversion of Wholesale Services to Network Elements or Network Elements to Wholesale Services**

12.1 Upon request, AT&T shall convert a wholesale service, or group of wholesale services, to the equivalent Network Element or Combination that is available to Level 3 pursuant to this Agreement, or convert a Network Element or Combination that is available to Level 3 under this Agreement to an equivalent wholesale service or group of wholesale services offered by AT&T (collectively "Conversion"). AT&T shall charge the applicable nonrecurring switch-as-is rates for Conversions to specific Network Elements or Combinations found in Exhibit A of Attachment 2. AT&T shall also charge the same nonrecurring switch-as-is rates when converting from Network Elements or Combinations. Any rate change resulting from the Conversion will be effective as of the next billing cycle following AT&T's receipt of a complete and accurate Conversion request from Level 3. A Conversion shall be considered termination for purposes of any volume and/or term commitments and/or grandfathered status between Level 3 and AT&T. Any change from a wholesale service/group of wholesale services to a Network Element/Combination, or from a Network Element/Combination to a wholesale service/group of wholesale services that requires a physical rearrangement will not be considered to be a Conversion for purposes of this Agreement. AT&T will not require physical rearrangements if the Conversion can be completed through record changes only. Orders for Conversions will be handled in accordance with the guidelines set forth in the Ordering Guidelines and Processes and CLEC Information Packages.

12.2 Any outstanding conversions shall be effective on or after the effective date of this Agreement.

**Issue 19 - LINE SPLITTING: What is the appropriate ICA language to implement AT&T's obligations with regard to line splitting?**

**13. Line Splitting**

13.1 Line splitting shall mean that a provider of data services (a Data LEC) and a provider of voice services (a Voice CLEC) deliver voice and data service to End Users over the same Loop. The Voice CLEC and Data LEC may be the same or different carriers.

13.2 Line Splitting – UNE-L. In the event Level 3 provides its own switching or obtains switching from a third party, Level 3 may engage in line splitting arrangements with another CLEC using a splitter, provided by Level 3, in a Collocation Space at the central office where the Loop terminates into a distribution frame or its equivalent.

13.3 Line Splitting – Loop and Port. To the extent Level 3 is using a commingled arrangement that consists of an Unbundled Loop purchased pursuant to this Agreement and Local Switching provided by AT&T pursuant to Section 271, AT&T will permit Level 3 to utilize Line Splitting. AT&T shall charge the rates set forth in Exhibit A of Attachment 2 for the Loop and splitting functionality. Rates for Local Switching shall be subject to a separate agreement between the Parties**.**

13.4 Level 3 shall provide AT&T with a signed LOA between it and the third party CLEC (Data CLEC or Voice CLEC) with which it desires to provision Line Splitting services, where Level 3 will not provide voice and data services.

13.5 Provisioning Line Splitting and Splitter Space – Loop and Port

13.5.1 The Data LEC, Voice CLEC, a third party or AT&T may provide the splitter. When Level 3 or its authorized agent owns the splitter, Line Splitting requires the following: a non-designed analog Loop from the serving wire center to the NID at the End User's location; a collocation cross-connection connecting the Loop to the collocation space; a second collocation cross-connection from the collocation space connected to a voice port; the high frequency spectrum line activation, and a splitter**.** Where AT&T owns the splitter, AT&T shall provide the splitter functionality upon request and consistent with the FCC's rules, and shall establish the necessary processes in its OSS to facilitate Level 3's ability to engage in line splitting arrangements.

13.5.2 An unloaded 2-wire copper Loop must serve the End User. The meet point for the Voice CLEC and the Data CLEC is the point of termination on the MDF for the Data CLEC's cable and pairs.

13.5.3 The foregoing procedures are applicable to a commingled arrangement of a Loop purchased pursuant to this Agreement and Local Switching pursuant to Section 271 purchased under a separate agreement.

13.6 Provisioning Line Splitting and Splitter Space – UNE-L

13.6.1 Level 3 provides the splitter when providing Line Splitting with UNE-L. When Level 3 or its authorized agent owns the splitter, Line Splitting requires the following: a loop from NID at the End User's location to the serving wire center and terminating into a distribution frame or its equivalent.

13.7 CLEC Provided Splitter – Line Splitting

13.7.1 To order High Frequency Spectrum on a particular Loop, Level 3 must have a DSLAM collocated in the central office that serves the End User of such Loop.

13.7.2 CLEC must provide its own splitters in a central office and have installed its DSLAM in that central office.

13.7.3 Level 3 may purchase, install and maintain central office POTS splitters in its collocation arrangements. Level 3 may use such splitters for access to its end users and to provide digital line subscriber services to its end users using the High Frequency Spectrum. Existing Collocation rules and procedures and the terms and conditions relating to Collocation set forth in Attachment 4-Central Office shall apply.

13.7.4 Any splitters installed by Level 3 in its collocation arrangement shall comply with ANSI T1.413, Annex E, or any future ANSI splitter Standards. Level 3 may install any splitters that AT&T deploys or permits to be deployed for itself or any AT&T affiliate.

13.8 Maintenance – Line Splitting – UNE-L

13.8.1 AT&T will be responsible for repairing voice troubles and the troubles with the physical loop between the NID at the End User's premises and the termination point.

13.8.2 AT&T must make all necessary network modifications, including providing nondiscriminatory access to operations support systems necessary for pre-ordering, ordering, provisioning, maintenance and repair, and billing for loops used in line splitting arrangements.

13.9 Indemnification

13.9.1 Level 3 shall indemnify, defend and hold harmless AT&T from and against any claims, losses, actions, causes of action, suits, demands, damages, injury and costs including reasonable attorney fees, which arise out of actions related to the other service provider (i.e. CLEC party to the line splitting arrangement who is not Level 3), except to the extent caused by AT&T's gross negligence or willful misconduct.

**Issue 22 – What is the appropriate ICA language, if any, to address call related databases?**

**14. Call Related Databases and Signaling**

14.1 Except for 911 and E911, AT&T is not required to provide unbundled access to call related databases pursuant to Section 251. Access to other call related databases is available pursuant to a separately negotiated agreement.

14.2 911 and E911 Databases

14.2.1 AT&T shall provide Level 3 with nondiscriminatory access to 911 and E911 databases on an unbundled basis, in accordance with 47 C.F.R. § 51.319 (f).

14.2.2 The ALI/DMS database contains End User information (including name, address, telephone information, and sometimes special information from the local service provider or End User) used to determine to which PSAP to route the call. The ALI/DMS database is used to provide enhanced routing flexibility for E911. Level 3 will be required to provide the AT&T 911 database vendor daily service order updates to E911 database in accordance with Section 14.3. below.

14.3 Technical Requirements

14.3.1 AT&T's 911 database vendor shall provide Level 3 the capability of providing updates to the ALI/DMS database through a specified electronic interface. Level 3 shall contact AT&T's 911 database vendor directly to request interface. Level 3 shall provide updates directly to AT&T's 911 database vendor on a daily basis. Updates shall be the responsibility of Level 3 and AT&T shall not be liable for the transactions between Level 3 and AT&T's 911 database vendor.

14.3.2 It is Level 3's responsibility to retrieve and confirm statistical data and to correct errors obtained from AT&T's 911 database vendor on a daily basis. All errors will be assigned a unique error code and the description of the error and the corrective action is described in the CLEC Users Guide for Facility Based Providers that is found on the AT&T Wholesale-Southeast Region Web site: http://wholesale.att.com/wholesale_markets/local/.

14.3.3 Level 3 shall conform to the AT&T standards as described in the CLEC Users Guide to E911 for Facilities Based Providers that is located on the AT&T Wholesale-Southeast Region Web site: http://wholesale.att.com/wholesale_markets/local/.

14.3.4 Stranded Unlocks are defined as End User records in AT&T's ALI/DMS database that have not been migrated for over ninety (90) days to Level 3, as a new provider of local service to the End User. Stranded Unlocks are those End User records that have been "unlocked" by the previous local exchange carrier that provided service to the End User and are open for Level 3 to assume responsibility for such records.

14.3.5 Based upon End User record ownership information available in the NPAC database, AT&T shall provide a Stranded Unlock annual report to Level 3 that reflects all Stranded Unlocks that remain in the ALI/DMS database for over ninety (90) days. Level 3 shall review the Stranded Unlock report, identify its Customer records and request to either delete such records or migrate the records to Level 3 within two (2) months following the date of the Stranded Unlock report provided by AT&T. Level 3 shall reimburse AT&T for any charges AT&T's database vendor imposes on AT&T for the deletion of Level 3's records.

**Issue 23 - What is the appropriate language to implement AT&T's obligation, if any, to offer unbundled access to newly deployed or "greenfield" fiber loops, including fiber loops deployed to the minimum point of entry (MPOE) of a multiple dwelling unit that is predominantly residential and what, if any impact does the ownership of the inside wiring from the MPOE to each end user have one this obligation?**

**Issue 28 - What is the appropriate language, if any, to address access to overbuild deployments of fiber to the home and fiber to the curb facilities?**

**15.** Fiber to the Home (FTTH) loops are local loops consisting entirely of fiber optic cable, whether dark or lit, serving an End User's premises or, in the case of predominantly residential multiple dwelling units (MDUs), a fiber optic cable, whether dark or lit, that extends to the MDU minimum point of entry (MPOE).

15.1 Fiber to the Curb (FTTC) loops are local loops consisting of fiber optic cable connecting to a copper distribution plant that is not more than five hundred (500) feet from the End User's premises or, in

the case of predominantly residential MDUs, not more than five hundred (500) feet from the MDU's MPOE. The fiber optic cable in a FTTC loop must connect to a copper distribution plant at a serving area interface from which every other copper distribution subloop also is not more than five hundred (500) feet from the respective End User's premises.

15.2 Greenfield Requirements: In new build (Greenfield) areas, where AT&T has only deployed FTTH/FTTC facilities, AT&T is under no obligation to provide such FTTH and FTTC Loops. FTTH facilities include fiber loops deployed to the MPOE of a MDU that is predominately residential regardless of the ownership of the inside wiring from the MPOE to each End User in the MDU.

15.3 Overbuild Requirements: In FTTH/FTTC overbuild situations where AT&T also has copper loops, AT&T will make those copper loops available to CLEC on an unbundled basis, until such time as AT&T chooses to retire those copper Loops using the FCC's network disclosure requirements. In these cases, AT&T will offer a 64 Kbps second voice grade channel over its FTTH/FTTC facilities. AT&T's retirement of copper loops must comply with Applicable Law.

15.4 DS1/DS3 Requirements: Notwithstanding the above, nothing in this Section shall limit AT&T's obligation to offer CLECs unbundled DS1 and DS3 loops (or loop/transport combination), regardless of the Loop medium employed, in any wire center where AT&T is required to provide such loop facilities.

**Issue 24 - What is the appropriate ICA language to implement AT&T's obligation to provide unbundled access to hybrid loops?**

**16.** Hybrid loops are defined in the federal rules at 47 CFR §51.319(a)(2) as local loops, composed of both fiber optic cable, usually in the feeder plant, and copper twisted wire or cable, usually in the distribution plant. AT&T shall provide Level 3with nondiscriminatory access to the time division multiplexing features, functions and capabilities of such hybrid loop, including DS1 and DS3 capacity under Section 251 where impairment exists, on an unbundled basis to establish a complete transmission path between AT&T's central office and an End User's premises, but AT&T is not required to provide access to the packet switched features, functions and capabilities of its hybrid loops.

16.1 AT&T shall not engineer the transmission capabilities of its network in a manner, or engage in any policy, practice, or procedure, that disrupts or degrades access to a local loop or subloop, including the time division multiplexing-based features, functions, and capabilities of a hybrid loop, for which a requesting telecommunications carrier may obtain or has obtained access pursuant to this Attachment.

**Issue 26: What is the appropriate ICA language to implement AT&T's obligation to provide RNMs?**

**Issue 27: What is the appropriate process for establishing a rate, if any, to allow for the cost of a routine network modification that is not already recovered in Commission-approved recurring and nonrecurring rates? What is the appropriate language, if any, to incorporate into the ICAs?**

**17. Routine Network Modifications**

17.1 AT&T will perform Routine Network Modifications (RNM) in accordance with FCC 47 CFR 51.319 (a)(7) and (e)(4) for Loops and Dedicated Transport provided under this Attachment. AT&T shall make all routine network modifications to unbundled loop and transport facilities used by Level 3 at Level 3's request where the requested loop and/or transport facility has already been constructed. AT&T shall perform these routine network modifications to facilities in a non-discriminatory fashion, without regard to whether the loop or transport facility being accessed was constructed on behalf, or in accordance with the specifications, of any carrier. A routine network modification is an activity that AT&T regularly undertakes for its own customers. Routine network modifications include, but are not limited to, rearranging or splicing of cable; adding an equipment case; adding a doubler or repeater; adding a smart jack; installing a repeater shelf; adding a line card; deploying a new multiplexer or reconfiguring an existing multiplexer; attaching electronic and other equipment that AT&T ordinarily attaches to a loop or transport facility to serve its own customers. Routine network modifications may entail activities such as accessing manholes, deploying bucket trucks to reach aerial cable, and installing equipment casings. Routine network modifications do not include the construction of a new loop, or the installation of new aerial or buried cable for Level 3.

17.2 AT&T shall perform routine network modifications pursuant to the existing non-recurring charges and recurring rates ordered by the Commission for the loop and transport facilities set forth in Exhibit A of Attachment 2 of the Agreement and not at an additional charge. RNM shall be performed within the intervals established for the Network Element and subject to the performance measurements and associated remedies set forth in Attachment 9 of this Agreement except to the extent AT&T demonstrates that such RNM were not anticipated in the setting of such intervals. If AT&T believes that it has not anticipated a requested network modification as being a RNM and has not recovered the costs of such RNM in the rates set forth in Exhibit A of Attachment 2 of the Agreement, AT&T can seek resolution from the Commission. However, in the interim, AT&T will perform the RNM at the existing recurring and non-recurring rates associated with the provision of the loop or transport facility. There may not be any double recovery or retroactive recovery of these costs.

**18. Line Conditioning**

18.1 AT&T shall perform line conditioning in accordance with FCC 47 C.F.R. 51.319 (a)(1)(iii). Line Conditioning is as defined in FCC 47 C.F.R. 51.319 (a)(1)(iii)(A). Insofar as it is technically feasible, AT&T shall test and report troubles for all the features, functions, and capabilities of conditioned copper lines, and may not restrict its testing to voice transmission only.

18.2 AT&T will remove load coils and bridged tap on copper Loops and Subloops of any length at rates set forth in Exhibit A of Attachment 2 of the Agreement.

**Issue 29 - What is the appropriate ICA language to implement AT&T's EEL audit rights, if any, under the TRO?**

**19. EELs Audit provisions**

19.1 After June 29, 2010, AT&T may, on an annual basis audit Level 3's records based on cause, in order to verify compliance with the high capacity EEL eligibility criteria. To invoke its limited right to audit, AT&T shall send a written Notice of Audit to Level 3stating its concern that Level 3 is not complying with the service eligibility requirements. Such Notice of Audit will be delivered to Level 3 no less than thirty (30) calendar days prior to the date upon which AT&T seeks to commence an audit and shall include a listing of the circuits for which AT&T alleges noncompliance, including all supporting documentation and a list of three auditors from which Level 3 may choose one to conduct the audit.

19.2 The auditor selected shall be an independent third party retained and paid for by AT&T. The audit must be performed in accordance with the standards established by the American Institute for Certified Public Accountants (AICPA) which will require the auditor to perform an "examination engagement" and issue an opinion regarding Level 3's compliance with the high capacity EEL eligibility criteria. AICPA standards and other AICPA requirements will be used to determine the independence of an auditor. The independent auditor's report will conclude whether Level 3 complied in all material respects with the applicable service eligibility criteria. Consistent with standard auditing practices, such audits require compliance testing designed by the independent auditor.

19.3 To the extent the independent auditor's report concludes that Level 3 failed to comply with the service eligibility criteria, Level 3 must true-up any difference in payments, convert all noncompliant circuits to the appropriate service, and make the correct payments on a going forward basis.

19.4 To the extent the independent auditor's report concludes that Level 3 failed to comply in all material respects with the service eligibility criteria, Level 3 shall reimburse AT&T for the cost of the independent auditor. To the extent the independent auditor's report concludes that Level 3 did comply in all material respects with the service eligibility criteria, AT&T will reimburse Level 3 for its reasonable and demonstrable costs associated with the audit. Level 3 will maintain appropriate documentation to support its certifications.

**Issue 25 – Under the FCC's definition of a loop found in 47 C.F.R. §51.319(a), is a mobile switching center or cell site an "end User customer's premises?"**

**20.** Level 3 shall not obtain a Network Element for the exclusive provision of mobile wireless services or interexchange services.

**21.** Facilities that do not terminate at a demarcation point at an End User premises, including, by way of example, but not limited to, facilities that terminate to another carrier's switch or premises, a cell site, Mobile Switching Center or base station, do not constitute local Loops under Section 251, except to the extent that Level 3 may require Loops to such locations for the purpose of providing telecommunications services to its personnel at those locations.

**Issue 20 – a) What is the appropriate ICA language, if any, to address sub loop feeder or sub loop concentration? b) Do the FCC's rules for sub loops for multi-unit premises limit CLEC access to copper facilities only or do they also include access to fiber facilities? C) What are the suitable points of access for sub-loops for multi-unit premises?**

**22. Subloop Elements**

22.1 Where facilities permit, AT&T shall offer access to its Unbundled Subloop (USL) elements as specified herein.

22.2 Unbundled Subloop Distribution (USLD)

22.2.1 The USLD facility is a dedicated transmission facility that AT&T provides from an End User's point of demarcation to an AT&T cross-connect device. The AT&T cross-connect device may be located within a remote terminal (RT) or a stand-alone cross-box in the field or in the equipment room of a building. The USLD media is a copper twisted pair that can be provisioned as a 2-wire or 4-wire facility. AT&T will make available the following subloop distribution offerings where facilities exist:

USLD – Voice Grade (USLD-VG)
Unbundled Copper Subloop (UCSL)
USLD – Intrabuilding Network Cable (USLD-INC (aka riser cable))

22.2.2 USLD-VG is a copper subloop facility from the cross-box in the field up to and including the point of demarcation at the End User's premises and may have load coils.

22.2.3 UCSL is a copper facility eighteen thousand (18,000) feet or less in length provided from the cross-box in the field up to and including the End User's point of demarcation. If available, this facility will not have any intervening equipment such as load coils between the End User and the cross-box.

22.2.4 If Level 3 requests a UCSL and it is not available, Level 3 may request the copper Subloop facility be modified pursuant to the ULM process to remove load coils and/or excessive bridged taps. If load coils and/or excessive bridged taps are removed, the facility will be classified as a UCSL.

22.2.5 USLD-INC is the distribution facility owned or controlled by AT&T inside a building or between buildings on the same property that is not separated by a public street or road. USLD-INC includes the facility from the cross-connect device in the building equipment room up to and including the point of demarcation at the End User's premises.

22.2.6 Upon request for USLD-INC from Level 3, AT&T will install a cross-connect panel in the building equipment room for the purpose of accessing USLD-INC pairs from a building equipment room. The cross-connect panel will function as a single point of interconnection (SPOI) for USLD-INC and will be accessible by multiple carriers as space permits. AT&T will place cross-connect blocks in twenty five (25) pair increments for Level 3's use on this cross-connect panel. Level 3 will be responsible for connecting its facilities to the twenty five (25) pair cross-connect block(s).

22.2.7 For access to Voice Grade USLD and UCSL, Level 3 shall install a cable to the AT&T cross-box pursuant to the terms and conditions for physical collocation for remote sites set forth in Attachment

4. This cable would be connected by an AT&T technician within the AT&T cross-box during the set-up process. Level 3's cable pairs can then be connected to AT&T's USL within the AT&T cross-box by the AT&T technician.

22.2.8 Through the SI process, AT&T will determine whether access to USLs at the location requested by Level 3 is technically feasible and whether sufficient capacity exists in the cross-box. If existing capacity is sufficient to meet Level 3's request, then AT&T will perform the site set-up as described in the CLEC Information Package, located at AT&T Wholesale-Southeast Region Web Site at: http://wholesale.att.com/.

22.2.9 The site set-up must be completed before Level 3 can order Subloop pairs. For the site set-up in an AT&T cross-connect box in the field, AT&T will perform the necessary work to splice Level 3's cable into the cross-connect box. For the site set-up inside a building equipment room, AT&T will perform the necessary work to install the cross-connect panel and the connecting block(s) that will be used to provide access to the requested USLs.

22.2.10 Once the site set-up is complete, Level 3 will request Subloop pairs through submission of a LSR form to the LCSC. OC is required with USL pair provisioning when Level 3 requests reuse of an existing facility, and the OC charge shall be billed in addition to the USL pair rate. For expedite requests by Level 3 for Subloop pairs, expedite charges will apply for intervals less than five (5) days.

22.2.11 USLs will be provided in accordance with AT&T's TR73600 Unbundled Local Loop Technical Specifications.

22.3 Unbundled Network Terminating Wire (UNTW)

22.3.1 UNTW is unshielded twisted copper wiring that is used to extend circuits from an intra-building network cable terminal or from a building entrance terminal to an individual End User's point of demarcation. It is the final portion of the Loop that in multi-subscriber configurations represents the point at which the network branches out to serve individual subscribers.

22.3.1.1 This element will be provided in MDUs and/or Multi-Tenants Units (MTUs) where either Party owns wiring all the way to the End User's premises. Neither Party will provide this element in locations where the property owner provides its own wiring to the End User's premises, where a third party owns the wiring to the End User's premises.

22.3.2 Requirements

22.3.2.1 On a multi-unit premises, upon request of the other Party (Requesting Party), the Party owning the network terminating wire (Provisioning Party) will provide access to UNTW pairs on an Access Terminal that is suitable for use by multiple carriers at each Garden Terminal or Wiring Closet.

22.3.2.2 The Provisioning Party shall not be required to install new or additional NTW beyond existing NTW to provision the services of the Requesting Party.

22.3.2.3 In existing MDUs and/or MTUs in which AT&T does not own or control wiring (INC/NTW) to the End User's premises, and Level 3 does own or control such wiring, Level 3 will install UNTW Access

Terminals for AT&T under the same terms and conditions as AT&T provides UNTW Access Terminals to Level 3.

22.3.2.4 In situations in which AT&T activates a UNTW pair, AT&T will compensate Level 3 for each pair activated commensurate to the price specified in Level 3's Agreement.

22.3.2.5 Upon receipt of the UNTW SI requesting access to the Provisioning Party's UNTW pairs at a multi-unit premises, representatives of both Parties will participate in a meeting at the site of the requested access. The purpose of the site visit will include discussion of the procedures for installation and location of the Access Terminals. By request of the Requesting Party, an Access Terminal will be installed either adjacent to each of the Provisioning Party's Garden Terminal or inside each Wiring Closet. The Requesting Party will deliver and connect its central office facilities to the UNTW pairs within the Access Terminal. The Requesting Party may access any available pair on an Access Terminal. A pair is available when a pair is not being utilized to provide service or where the End User has requested a change in its local service provider to the Requesting Party. Prior to connecting the Requesting Party's service on a pair previously used by the Provisioning Party, the Requesting Party is responsible for ensuring the End User is no longer using the Provisioning Party's service or another CLEC's service before accessing UNTW pairs.

22.3.2.6 Access Terminal installation intervals will be established on an individual case basis.

22.3.2.7 The Requesting Party is responsible for obtaining the property owner's permission for the Provisioning Party to install an Access Terminal(s) on behalf of the Requesting Party. The submission of the SI by the Requesting Party will serve as certification by the Requesting Party that such permission has been obtained. If the property owner objects to Access Terminal installations that are in progress or within thirty (30) days after completion and demands removal of Access Terminals, the Requesting Party will be responsible for costs associated with removing Access Terminals and restoring the property to its original state prior to Access Terminals being installed.

22.3.2.8 The Requesting Party shall indemnify and hold harmless the Provisioning Party against any claims of any kind that may arise out of the Requesting Party's failure to obtain the property owner's permission. The Requesting Party will be billed for nonrecurring and recurring charges for accessing UNTW pairs at the time the Requesting Party activates the pair(s). The Requesting Party will notify the Provisioning Party within five (5) business days of activating UNTW pairs using the LSR form.

22.3.2.9 If a trouble exists on a UNTW pair, the Requesting Party may use an alternate spare pair that serves that End User if a spare pair is available. In such cases, the Requesting Party will re-terminate its existing jumper from the defective pair to the spare pair. Alternatively, the Requesting Party will isolate and report troubles in the manner specified by the Provisioning Party. The Requesting Party must tag the UNTW pair that requires repair. If the Provisioning Party dispatches a technician on a reported trouble call and no UNTW trouble is found, the Provisioning Party will charge Requesting Party for time spent on the dispatch and testing the UNTW pair(s).

22.3.2.10 If the Requesting Party initiates the Access Terminal installation and the Requesting Party has not activated at least ten percent (10%) of the capacity of the Access Terminal installed pursuant to the Requesting Party's request for an Access Terminal within six (6) months of installation of the

Access Terminal, the Provisioning Party will bill the Requesting Party a nonrecurring charge equal to the actual cost of provisioning the Access Terminal.

22.3.2.11 If the Provisioning Party determines that the Requesting Party is using the UNTW pairs without reporting the activation of the pairs, the Requesting Party will be billed for the use of that pair back to the date the End User began receiving service from the Requesting Party at that location. Upon request, the Requesting Party will provide copies of its billing record to substantiate such date. If the Requesting Party fails to provide such records, then the Provisioning Party will bill the Requesting Party back to the date of the Access Terminal installation.

| RATES - Kentucky | | | | | | | | | | | | | | Att: 2 Exh: A | | | |
|---|---|---|---|---|---|---|---|---|---|---|---|---|---|---|---|---|---|
| CATEGORY | | RATE ELEMENTS | Interim | Zone | BCS | USOC | RATES($) | | | | | Svc Order Submitted Elec per LSR | Svc Order Submitted Manually per LSR | Incremental Charge - Manual Svc Order vs. Electronic- 1st | Incremental Charge - Manual Svc Order vs. Electronic- Add'l | Incremental Charge - Manual Svc Order vs. Electronic- Disc 1st | Incremental Charge - Manual Svc Order vs. Electronic- Disc Add'l |
| | | | | | | | Rec | Nonrecurring | | Nonrecurring Disconnect | | OSS Rates($) | | | | | |
| | | | | | | | | First | Add'l | First | Add'l | SOMEC | SOMAN | SOMAN | SOMAN | SOMAN | SOMAN |
| LOOP MODIFICATION | | | | | | | | | | | | | | | | | |
| | | Unbundled Loop Modification, Removal of Load Coils - 2 wire greater than 18k ft | | | UCL, ULS, UEQ | ULM2G | | 342.24 | 342.24 | | | | | | | | |
| | | Unbundled Loop Modification Removal of Load Coils - 4 Wire pair greater than 18k ft | | | UCL | ULM4G | | 342.24 | 342.24 | | | | | | | | |

# AMENDMENT TO INTERCONNECTION AGREEMENT UNDER SECTIONS 251 AND 252 OF THE TELECOMMUNICATIONS ACT OF 1996 BETWEEN BELLSOUTH TELECOMMUNICATIONS, INC. d/b/a AT&T ALABAMA, AT&T FLORIDA, AT&T GEORGIA, AT&T KENTUCKY, AT&T LOUISIANA, AT&T MISSISSIPPI, AT&T NORTH CAROLINA AND AT&T SOUTH CAROLINA AND LEVEL 3 COMMUNICATIONS, L.L.C.

The Interconnection Agreement dated June 23, 2004 by and between BellSouth Telecommunications, Inc. d/b/a AT&T Alabama, AT&T Florida, AT&T Georgia, AT&T Kentucky, AT&T Louisiana, AT&T Mississippi, AT&T North Carolina, and AT&T South Carolina ("AT&T") and Level 3 Communications, L.L.C. ("Level 3") ("Agreement") effective in the state(s) of Alabama, Florida, Georgia, Kentucky, Louisiana, Mississippi, North Carolina, and South Carolina is hereby amended as follows:

1. Section 2.1 of the General Terms and Conditions is amended by adding the following section:

   2.1.1 Notwithstanding anything to the contrary in this section 2.1, the original expiration date of this Agreement, as modified by this Amendment, will be extended for a period of three (3) years from February 26, 2007 until February 26, 2010 (the "Extended Expiration Date"). The Agreement shall expire on the Extended Expiration Date; provided, however, that during the period from the effective date of this Amendment until the Extended Expiration Date, the Agreement may be terminated earlier either by written notice from Level 3, by AT&T pursuant to the Agreement's early termination provisions, or by mutual agreement of the parties.

2. The Agreement is also amended as follows to reflect prior changes of law, and Level 3 acknowledges and agrees that it will promptly amend the Agreement to reflect future changes of law as and when they may arise.

3. EXCEPT AS MODIFIED HEREIN, ALL OTHER TERMS AND CONDITIONS OF THE UNDERLYING AGREEMENT SHALL REMAIN UNCHANGED AND IN FULL FORCE AND EFFECT.

4. In entering into this Amendment neither Party waives, and each Party expressly reserves, any rights, remedies or arguments it may have at law or under the intervening law or regulatory change provisions in the underlying Agreement (including intervening law rights asserted by either Party via written notice predating this Amendment) with respect to any orders, decisions, legislation or proceedings and any remands thereof, which the Parties have not yet fully incorporated into this Agreement or which may be the subject of further review.

5. This Amendment shall be filed with and is subject to approval by the Commission(s) and shall become effective on the date of the last signature executing the Amendment.

**AMENDMENT TO EXTEND TERM DATE/BELLSOUTH TELECOMMUNICATIONS, INC.
d/b/a AT&T ALABAMA, AT&T FLORIDA, AT&T GEORGIA,
AT&T KENTUCKY, AT&T LOUISIANA, AT&T MISSISSIPPI,
AT&T NORTH CAROLINA, AND AT&T SOUTH CAROLINA ("AT&T")
AT&T/LEVEL 3 COMMUNICATIONS, L.L.C.
041508**

| **Level 3 Communications, L.L.C.** | **BellSouth Telecommunications, Inc. d/b/a AT&T Alabama, AT&T Florida, AT&T Georgia, AT&T Kentucky, AT&T Louisiana, AT&T Mississippi, AT&T North Carolina, and AT&T South Carolina** |
|---|---|
| By: Jamie Moyer | By: |
| Name: Jamie Moyer (Print or Type) | Name: Kristen E. Shore |
| Title: Senior Director, Interconnection Services (Print or Type) | Title: Director |
| Date: 4-16-08 | Date: 4/23/08 |

**FACILITIES-BASED OCN # _____**

**ACNA _____**

Version: 10/18/07
Extension Amendment

# Amendment to the Agreement Between Level 3 Communications, L.L.C. and BellSouth Telecommunications, Inc. d/b/a AT&T Tennessee Dated June 23, 2004

Pursuant to this Amendment (the "Amendment"), Level 3 Communications, L.L.C. (Level 3), and BellSouth Telecommunications, Inc. d/b/a AT&T Tennessee ("AT&T") hereinafter referred to collectively as the "Parties", hereby agree to amend that certain Interconnection Agreement between the Parties dated June 23, 2004 ("Agreement").

## WITNESSETH:

**WHEREAS**, AT&T and Level 3 entered into the Agreement on June 23, 2004, and;

**WHEREAS,** on November 28, 2007, the Tennessee Regulatory Authority ("Authority") issued its Order in Docket No. 04-00381 ("Change of Law") Proceeding to Consider Amendments to Interconnection Agreements Resulting from Changes of Law; and

**WHEREAS,** the Parties are obligated to amend the Agreement to bring it in compliance with the Authority's Change of Law Order ("Order"); and

**NOW, THEREFORE**, in consideration of the promises and mutual agreements set forth herein, the Parties agree to amend the Agreement as follows:

1. **AT&T-9STATE** shall be defined as the states of Alabama, Florida, Georgia, Kentucky, Louisiana, Mississippi, North Carolina, South Carolina and Tennessee.
2. The Parties agree that Attachment 2 of the Agreement should be amended by the addition of the terms and conditions set forth in the Tennessee Change of Law Amendment Exhibit A attached hereto, and such contract provisions shall apply to services provided in the State of Tennessee only.
3. Section 2.1 of the General Terms and Conditions is amended by adding the following section:

   2.1.1 Notwithstanding anything to the contrary in this section 2.1, the original expiration date of this Agreement, as modified by this Amendment, will be extended for a period of three (3) years from February 26, 2007 until February 26, 2010 (the "Extended Expiration Date"). The Agreement shall expire on the Extended Expiration Date; provided, however, that during the period from the effective date of this Amendment until the Extended Expiration Date, the Agreement may be terminated earlier either by written notice from Level 3, by AT&T pursuant to the Agreement's early termination provisions, or by mutual agreement of the parties.

4. Conflict between this Amendment and the Agreement. This Amendment shall be deemed to revise the terms and provisions of the Agreement only to the extent necessary to give effect to the terms and provisions of this Amendment. In the event of a conflict between the terms and provisions of this

Amendment and the terms and provisions of the Agreement, this Amendment shall govern, *provided, however,* that the fact that a term or provision appears in this Amendment but not in the Agreement, or in the Agreement but not in this Amendment, shall not be interpreted as, or deemed grounds for finding, a conflict for purposes of this Section 3.

5. Counterparts. This Amendment may be executed in one or more counterparts, each of which when so executed and delivered shall be an original and all of which together shall constitute one and the same instrument.

6. Captions. The Parties acknowledge that the captions in this Amendment have been inserted solely for convenience of reference and in no way define or limit the scope or substance of any term or provision of this Amendment.

7. Scope of Amendment. This Amendment shall amend, modify and revise the Agreement only to the extent set forth expressly in Section 2 of this Amendment. Nothing in this Amendment shall be deemed to amend or extend the term of the Agreement, or to affect the right of a Party to exercise any right of termination it may have under the Agreement. Nothing in this Amendment shall affect the general application and effectiveness of the Agreement's "change of law," "intervening law", "successor rates" and/or any similarly purposed provisions. The rights and obligations set forth in this Amendment apply in addition to any other rights and obligations that may be created by such intervening law, change in law or other substantively similar provision.

8. This Amendment may require that certain sections of the Agreement shall be replaced and/or modified by the provisions set forth in this Amendment. The Parties agree that such replacement and/or modification shall be accomplished without the necessity of physically removing and replacing or modifying such language throughout the Agreement.

9. This Amendment shall be shall be deemed effective on March 11, 2006 ("Effective Date").

10. Reservation of Rights. In entering into this MFN Agreement, the Parties acknowledge and agree that neither Party waives, and each Party expressly reserves, any of its rights, remedies or arguments it may have at law or under the intervening law or regulatory change provisions in this MFN Agreement (including intervening law rights asserted by either Party via written notice as to the Separate Agreement), with respect to any orders, decisions, legislation or proceedings and any remands by the FCC, state utility commission, court, legislature or other governmental body including, without limitation, any such orders, decisions, legislation, proceedings, and remands which were issued, released or became effective prior to the Effective Date of this MFN Agreement, or which the Parties have not yet fully incorporated into this Agreement or which may be the subject of further government review.

**Level 3 Communications, L.L.C.**

By: Jamie Moyer

Name: Jamie Moyer

Title: Senior Director- Interconnection Services

Date: 7-1-08

**BellSouth Telecommunications, Inc.**
**d/b/a AT&T Tennessee**

By: Kristen E. Shore

Name: Kristen E. Shore

Title: Director

Date: 7/7/08

| | **OCN #** | **ACNA** |
|---|---|---|
| TENNESSEE | _____ | _____ |

**Issue 2 – What is the appropriate manner in which to transition to post-TRRO arrangements?**

1. **Transition for DS1 and DS3 Loops**

1.1 For purposes of this Section 1, the Transition Period for the Embedded Base of DS1 and DS3 Loops and for the Excess DS1 and DS3 Loops is the twelve (12) month period beginning March 11, 2005 and ending March 10, 2006.

1.2 For purposes of this Section 1, Embedded Base means DS1 and DS3 Loops that were in service for Level 3 as of March 11, 2005 in those wire centers that, as of such date, met the criteria set forth in Section 1.4.1 and 1.4.2. Subsequent disconnects or loss of End Users shall be removed from the Embedded Base.

1.3 Excess DS1 and DS3 Loops are those Level 3 DS1 and DS3 Loops in service as of March 11, 2005, in excess of the caps set forth in Sections 1.3.1 and 1.3.2 below, respectively. Subsequent disconnects or loss of End Users shall be removed from Excess DS1 and DS3 Loops.

1.3.1 Level 3 may obtain a maximum of ten (10) unbundled DS1 Loops to any single building in which such Loops are still subject to unbundling requirements.

1.3.2 Level 3 may obtain a maximum of one (1) Unbundled DS3 Loop to any single building in which such Loops are still subject to unbundling requirements.

1.4 Notwithstanding anything to the contrary in this Agreement, and except as set forth in Section 8, AT&T Tennessee shall make available the following DS1 and DS3 Loops only for Level 3's Embedded Base during the Transition Period:

1.4.1 Unbundled DS1 Loops to any Building served by a wire center containing 60,000 or more Business Lines and four (4) or more fiber-based collocators.

1.4.2 Unbundled DS3 Loops at any Building served by a wire center containing 38,000 or more Business Lines and four (4) or more fiber-based collocators.

1.5 A list of wire centers meeting the criteria set forth in Sections 1.4.1 and 1.4.2 above, is set forth in Accessible Letter CLECSE08-008 which is available on the AT&T Wholesale Web site.

1.6 Transition Period Pricing. From March 11, 2005, through the expiration of the Transition Period, AT&T Tennessee shall charge/collect a rate for Level 3's Embedded Base and Level 3's Excess DS1 and DS3 Loops equal to the higher of:

1.6.1 115% of the rate paid for that element on June 15, 2004; or

1.6.2 115% of a new rate the Commission establishes, if any, between June 16, 2004 and March 11, 2005.

1.6.3 These rates shall be as set forth in Exhibit A to Attachment 2 of the Agreement and this Section 1.6.

1.7 The Transition Period shall apply only to (1) Level 3's Embedded Base and (2) Level 3's Excess DS1 and DS3 Loops. Level 3 shall not add new DS1 or DS3 loops pursuant to this Agreement.

1.8 Once a wire center meets or exceeds both of the thresholds set forth in Section 1.4.1 above, no future DS1 Loop unbundling will be required in that wire center.

1.9 Once a wire center meets or exceeds both of the thresholds set forth in Section 1.4.2 above, no future DS3 Loop unbundling will be required in that wire center.

1.10 Within 30 days of executing this amendment, Level 3 shall submit spreadsheet(s) identifying all of the Embedded Base of circuits and Excess DS1 and DS3 Loops to be either disconnected or converted to other AT&T Tennessee services. AT&T Tennessee will return a spreadsheet to Level 3 including finalized UNEs subject to conversion or disconnection no later than 30 days from receipt of Level 3's initial spreadsheet. The Parties shall negotiate a project schedule for the Conversion of the Embedded Base and Excess DS1 and DS3 Loops and AT&T Tennessee will charge the switch as is rate for conversion to the equivalent tariff services.

1.11 If Level 3 failed to submit the spreadsheet(s) for its Embedded Base and Excess DS1 and DS3 Loops on or before the time period identified in Section 1.10, AT&T Tennessee will identify Level 3's remaining Embedded Base and Excess DS1 and DS3 Loops, if any, and will transition such circuits to the equivalent wholesale services provided by AT&T Tennessee. Those circuits identified and transitioned by AT&T Tennessee pursuant to this Section shall be subject to the switch-as-is rates set forth in this Agreement for conversions to equivalent tariffed services.

1.12 For Embedded Base circuits and Excess DS1 and DS3 Loops converted or transitioned, the applicable recurring tariff charge shall apply to each circuit as of March 11, 2006. The transition of the Embedded Base and Excess DS1 and DS3 Loops should be performed in a manner that avoids, or otherwise minimizes to the extent possible, disruption or degradation to Level 3's customers' service.

2. **Dark Fiber Loop**

2.1 Dark Fiber Loop is an unused optical transmission facility, without attached signal regeneration, multiplexing, aggregation or other electronics, from the demarcation point at an End User's premises to the End User's serving wire center. Dark Fiber Loops may be strands of optical fiber existing in aerial or underground structure. AT&T Tennessee will not provide line terminating elements, regeneration or other electronics necessary for Level 3 to utilize Dark Fiber Loops.

2.2 Transition for Dark Fiber Loop

2.2.1 For purposes of this Section 2.2, the Transition Period for Dark Fiber Loops is the eighteen (18) month period beginning March 11, 2005 and ending September 10, 2006.

2.2.2 For purposes of this Section 2.2, Embedded Base means Dark Fiber Loops that were in service for Level 3 as of March 11, 2005. Subsequent disconnects or loss of End Users shall be removed from the Embedded Base.

2.2.3 During the Transition Period only, AT&T Tennessee shall make available for the Embedded Base Dark Fiber Loops for Level 3 at the terms and conditions set forth in this Amendment.

2.2.4 Transition Period Pricing. From March 11, 2005, through the completion of the Transition Period, AT&T Tennessee shall charge a rate for Level 3's Embedded Base of Dark Fiber Loops equal to the higher of:

2.2.4.1 115% of the rate paid for that element on June 15, 2004; or

2.2.4.2 115% of a new rate the Commission establishes, if any, between June 16, 2004 and March 11, 2005.

2.2.4.3 These rates shall be as set forth in Exhibit A to Attachment 2 of the Agreement and this Section 2.2.4.

2.2.4.4 The Transition Period shall apply only to Level 3's Embedded Base and Level 3 shall not add new Dark Fiber Loops pursuant to this Agreement.

2.2.5 Effective September 11, 2006, Dark Fiber Loops shall no longer be made available pursuant to this Agreement.

2.2.6 Level 3 shall submit spreadsheets to AT&T Tennessee within 30 days of executing this amendment, identifying the specific Dark Fiber Loops, to be either disconnected or converted to other AT&T Tennessee services. AT&T Tennessee will return a spreadsheet to Level 3including finalized UNEs subject to conversion or disconnection no later than 30 days from receipt of Level 3's initial spreadsheet. Level 3 may transition from Dark Fiber Loops to other available wholesale facilities provided by AT&T Tennessee, including special access, wholesale facilities obtained from other carriers, or self-provisioned facilities. For Conversions as defined in Section 14, such spreadsheets shall take the place of an LSR or ASR. The Parties shall negotiate a project schedule for the Conversion of the Embedded Base Dark Fiber Loops and AT&T Tennessee will charge the switch as is rate for conversion to the equivalent tariff services. In the case of disconnection, the applicable disconnect charges set forth in this Agreement shall apply.

2.2.6.1 If Level 3 fails to submit the spreadsheet(s) specified in Section 2.2.6 above for all of its Embedded Base within 30 days of executing this amendment, AT&T Tennessee will identify Level 3's remaining Embedded Base, if any, and will transition such circuits to the equivalent tariffed AT&T Tennessee service(s). Those circuits identified and transitioned by AT&T Tennessee pursuant to this Section 2.2.6.1 shall be subject to the switch-as-is rates set forth in this Agreement for conversions to equivalent tariffed services.

2.2.6.2 For Embedded Base circuits converted or transitioned, the applicable recurring tariff charge shall apply to each circuit as of September 11, 2006. The transition of the Embedded Base circuits should be performed in a manner that avoids, or otherwise minimizes to the extent possible, disruption or degradation to Level 3's customers' service.

**3. Local Switching**

3.1 Local Switching is not available pursuant to this Agreement

4. **Dedicated Transport and Dark Fiber Transport**

4.1 Dedicated Transport. Dedicated Transport is defined as AT&T Tennessee's transmission facilities between wire centers or switches owned by AT&T Tennessee, or between wire centers or switches

owned by AT&T Tennessee and switches owned by Level 3, including but not limited to DS1, DS3 and OCn level services, as well as dark fiber, dedicated to Level 3. AT&T Tennessee shall not be required to provide access to OCn level Dedicated Transport under any circumstances pursuant to this Agreement. In addition, except as set forth in Section 4.2 below, AT&T Tennessee shall not be required to provide to Level 3 unbundled access to interoffice transmission facilities that do not connect a pair of wire centers or switches owned by AT&T Tennessee ("Entrance Facilities").

4.2 Transition for DS1 and DS3 Dedicated Transport Including DS1 and DS3 Entrance Facilities

4.2.1 For purposes of this Section 4.2, the Transition Period for the Embedded Base of DS1 and DS3 Dedicated Transport, Embedded Base Entrance Facilities and for Excess DS1 and DS3 Dedicated Transport is the twelve (12) month period beginning March 11, 2005 and ending March 10, 2006.

4.2.2 For purposes of this Section 4.2, Embedded Base means DS1 and DS3 Dedicated Transport that were in service for Level 3 as of March 11, 2005 in those wire centers that, as of such date, met the criteria set forth in Sections 4.2.6.1 or 4.2.6.2 below. Subsequent disconnects or loss of End Users shall be removed from the Embedded Base.

4.2.3 For purposes of this Section 4.2, Embedded Base Entrance Facilities means Entrance Facilities that were in service for Level 3 as of March 11, 2005. Subsequent disconnects or loss of customers shall be removed from the Embedded Base.

4.2.4 For purposes of this Section 4.2, Excess DS1 and DS3 Dedicated Transport mean those Level 3 DS1 and DS3 Dedicated Transport facilities in service as of March 11, 2005, in excess of the caps set forth in Section 4.2.6.3. Subsequent disconnects and loss of End Users shall be removed from Excess DS1 and DS3 Loops.

4.2.5 For purposes of this Section 4.2, a Business Line is as defined in 47 C.F.R. §51.5.

4.2.6 Notwithstanding anything to the contrary in this Agreement, AT&T Tennessee shall make available the following Dedicated Transport as described in this Section 4.2 only for Level 3's Embedded Base and Excess Dedicated Transport during the Transition Period:

4.2.6.1 DS1 Transport where both wire centers at the end points of the route contain at least four (4) fiber-based collocators or at least 38,000 Business access lines.

4.2.6.2 DS3 Transport where both wire centers at the end points of the route contain at least three (3) fiber-based collocators or at least 24,000 Business access lines.

4.2.6.3 Level 3 may obtain a maximum of twelve (12) unbundled DS3 Dedicated Transport circuits on each route where DS3 Dedicated Transport is available as a Network Element, and a maximum of ten (10) unbundled DS1 Dedicated Transport circuits on each Route where there is no 251(c)(3) unbundling obligation for DS3 Dedicated Transport but for which impairment exists for DS1 Dedicated Transport.

4.2.7 The Initial Unimpaired Wire Center List setting forth the wire centers meeting the criteria set forth in Sections 4.2.6.1 and 4.2.6.2 above is set forth in Accessible Letter CLECSE08-008, which is available on AT&T's Wholesale Web site.

4.2.8 Notwithstanding anything to the contrary in this Agreement, AT&T Tennessee shall make available Entrance Facilities only for Level 3's Embedded Base Entrance Facilities and only during the Transition Period.

4.2.9 Transition Period Pricing. From March 11, 2005, through the completion of the Transition Period, AT&T Tennessee shall charge/collect a rate for Level 3's Embedded Base of DS1 and DS3 Dedicated Transport and for Level 3's Excess DS1 and DS3 Dedicated Transport, as described in this Section 4.2, equal to the higher of:

4.2.9.1 115% of the rate paid for that element on June 15, 2004; or

4.2.9.2 115% of a new rate the Commission establishes, if any, between June 16, 2004 and March 11, 2005.

4.2.9.3 These rates shall be as set forth in Exhibit A to Attachment 2 of the Agreement and this Section 4.2.9.

4.2.9.4 From March 11, 2005, through the completion of the Transition Period, AT&T Tennessee shall charge/collect a rate for Level 3's Embedded Base Entrance Facilities as set forth in Exhibit A to Attachment 2 of the Agreement and this Section 4.2.9.

4.2.10 The Transition Period shall apply only to (1) Level 3's Embedded Base and Embedded Base Entrance Facilities; and (2) Level 3's Excess DS1 and DS3 Dedicated Transport. Level 3 shall not add new Entrance Facilities pursuant to this Agreement. Further, Level 3 shall not add new DS1 or DS3 Dedicated Transport as described in this Section 4.2 pursuant to this Agreement.

4.2.11 Once a wire center exceeds either of the thresholds set forth in Section 4.2.6.1 above, no future DS1 Dedicated Transport unbundling will be required in that wire center.

4.2.12 Once a wire center exceeds either of the thresholds set forth in Section 4.2.6.2 above, no future DS3 Dedicated Transport will be required in that wire center.

4.2.13 Within 30 days of executing this amendment, Level 3 shall submit spreadsheet(s) identifying all of the Embedded Base of circuits, Embedded Base Entrance Facilities, and Excess DS1 and DS3 Dedicated Transport to be either disconnected or converted to other AT&T Tennessee services pursuant to Section 14 below. AT&T Tennessee will return a spreadsheet to Level 3 including finalized UNEs subject to conversion or disconnection no later than 30 days from receipt of Level 3's initial spreadsheet. The Parties shall negotiate a project schedule for the Conversion of the Embedded Base, Embedded Base Entrance Facilities and Excess DS1 and DS3 Dedicated Transport and AT&T Tennessee will charge the switch as is rate for conversion to the equivalent tariff services. In the case of disconnection, the applicable disconnect charges set forth in this Agreement shall apply.

4.2.14 If Level 3 failed to submit the spreadsheet(s) identifying its Embedded Base DS1 and DS3 Dedicated Transport circuits, Embedded Base Entrance Facilities and Excess DS1 and DS3 Dedicated Transport on or before the time period identified in Section 4.2.13, AT&T Tennessee will identify Level 3's remaining Embedded Base DS1 and DS3 Dedicated Transport circuits, Embedded Base Entrance Facilities and Excess DS1 and DS3 Dedicated Transport, if any, and will transition such circuits to the equivalent tariffed AT&T Tennessee service(s). Those circuits identified and transitioned by AT&T Tennessee pursuant to this Section shall be subject to the switch-as-is rates set forth in this Agreement for conversions to equivalent tariffed services.

4.2.15 For Embedded Base DS1 and DS3 Dedicated Transport circuits, Embedded Base Entrance Facilities and Excess DS1 and DS3 Dedicated Transport converted or transitioned, the applicable recurring tariff charge shall apply to each circuit as of March 11, 2006. The transition of the Embedded Base DS1 and DS3 Dedicated Transport, Embedded Base Entrance Facilities and Excess DS1 and DS3 Dedicated Transport should be performed in a manner that avoids, or otherwise, minimizes to the extent possible, disruption or degradation to Level 3's customers' service.

4.3 Dark Fiber Transport. Dark Fiber Transport is defined as Dedicated Transport that consists of inactivated optical interoffice transmission facilities without attached signal regeneration, multiplexing, aggregation or other electronics. Except as set forth in Section 4.3.1 below, AT&T Tennessee shall not be required to provide access to Dark Fiber Transport Entrance Facilities pursuant to this Agreement.

4.3.1 Transition for Dark Fiber Transport and Dark Fiber Transport Entrance Facilities

4.3.2 For purposes of this Section 4.3, the Transition Period for the Embedded Base Dark Fiber Transport and Embedded Base Dark Fiber Entrance Facilities is the eighteen (18) month period beginning March 11, 2005 and ending September 10, 2006.

4.3.3 For purposes of this Section 4.3, Embedded Base means Dark Fiber Transport that was in service for Level 3 as of March 11, 2005 in those wire centers that, as of such date, met the criteria set forth in 4.3.5 below. Subsequent disconnects or loss of End Users shall be removed from the Embedded Base.

4.3.4 Notwithstanding anything to the contrary in this Agreement, AT&T Tennessee shall make available the following Dark Fiber Transport as described in this Section 4.3 only for Level 3's Embedded Base during the Transition Period:

4.3.5 Dark Fiber Transport where both wire centers at the end points of the route contain twenty-four thousand (24,000) or more Business Lines or three (3) or more fiber-based collocators.

4.3.6 The Initial Unimpaired Wire Center List setting forth the wire centers meeting the criteria set forth in Section 4.3.5 above is set forth in Accessible Letter CLECSE08-008, which is available on AT&T's Wholesale Web site.

4.3.7 Transition Period Pricing. From March 11, 2005, through the completion of the Transition Period, AT&T Tennessee shall charge/collect a rate for Level 3's Embedded Base of Dark Fiber and Embedded Base Dark Fiber Transport Entrance Facilities equal to the higher of:

4.3.7.1 115% of the rate paid for that element on June 15, 2004; or

4.3.7.2 115% of a new rate the Commission establishes, it any, between June 16, 2004 and March 11, 2005.

4.3.7.3 These rates shall be as set forth in Exhibit A to Attachment 2 of the Agreement and this Section 4.3.7.

4.3.8 The Transition Period shall apply only to Level 3's Embedded Base of Dark Fiber Transport and Dark Fiber Entrance Facilities. Level 3 shall not add new Dark Fiber Transport as described in this Section 4.3. Level 3 shall not add new Dark Fiber Entrance Facilities pursuant to this Agreement.

4.3.9 Once a wire center exceeds either of the thresholds set forth in Section 4.3.5 above, no future Dark Fiber Transport unbundling will be required in that wire center.

4.3.10 Within 30 days of executing this amendment, Level 3 shall submit spreadsheet(s) identifying all of the Embedded Base of Dark Fiber Transport and Dark Fiber Entrance Facilities to be either disconnected or converted to other AT&T Tennessee services as Conversions. AT&T Tennessee will return a spreadsheet to Level 3 including finalized UNEs subject to conversion or disconnection no later than 30 days from receipt of Level 3's initial spreadsheet. The Parties shall negotiate a project schedule for the Conversion of the Embedded Base of Dark Fiber Transport and Dark Fiber Entrance Facilities, and AT&T Tennessee will charge the switch as is rate for conversion to the equivalent tariff services.

4.3.11 If Level 3 fails to submit the spreadsheet(s) for all of its Embedded Base of Dark Fiber Transport and Dark Fiber Entrance Facilities on or before the time period identified in Section 4.3.10, AT&T Tennessee will identify Level 3's remaining Embedded Base of Dark Fiber Transport and Dark Fiber Entrance Facilities, if any, and will transition such circuits to the equivalent tariffed AT&T Tennessee service(s). Those circuits identified and transitioned by AT&T Tennessee pursuant to this Section shall be subject to the switch-as-is rates set forth in this Agreement for conversions to equivalent tariffed services.

4.3.12 For Embedded Base of Dark Fiber Transport and Embedded Base Dark Fiber Entrance Facilities converted or transitioned, the applicable recurring tariff charge shall apply to each circuit as of September 11, 2006.

5. Prior to submitting an order pursuant to this Agreement for high capacity (DS1 or above) Dedicated Transport or high capacity Loops, Level 3 shall undertake a reasonably diligent inquiry to determine whether Level 3 is entitled to unbundled access to such Network Elements in accordance with the terms of this Agreement. By submitting any such order, Level 3 self-certifies that to the best of Level 3's knowledge, the high capacity Dedicated Transport or high capacity Loop requested is available as a Network Element pursuant to this Agreement. Upon receiving such order, except in wire centers set forth on the AT&T Master List of Unimpaired Wire Centers, AT&T Tennessee shall process the request in reliance upon Level 3's self-certification. To the extent AT&T Tennessee believes that such request does not comply with the terms of this Agreement, AT&T Tennessee shall seek dispute resolution in accordance with the General Terms and Conditions of this Agreement. In the event such dispute is resolved in AT&T Tennessee's favor, AT&T Tennessee shall bill Level 3 the difference between the rates for such circuits pursuant to this Agreement and the applicable nonrecurring and recurring charges for the equivalent tariffed service from the date of installation to the date the circuit is transitioned to the equivalent tariffed service. Within thirty (30) days following a decision finding in AT&T Tennessee's favor, Level 3 shall submit an LSR(s) or spreadsheet(s) identifying those non-compliant circuits to be transitioned to tariffed services or disconnected.

5.1 In the event that (1) AT&T Tennessee designates a wire center as non-impaired, (2) Level 3 converts existing UNEs to other services or orders new services as services other than UNEs, (3) Level 3 otherwise would have been entitled to UNEs in such wire center at the time alternative services were provisioned, and (4) AT&T Tennessee acknowledges, or a state or federal agency

regulatory body with authority determines that, at the time AT&T Tennessee designated such wire center as non-impaired, such wire center did not meet the FCC's non-impairment criteria, then upon request of Level 3, AT&T Tennessee shall transition to UNEs any alternative services in such wire center that were established after such wire center was designated as non-impaired. In such instances, AT&T Tennessee shall refund Level 3 the difference between the rate paid by Level 3 for such services and the applicable UNE rate, including but not limited to any charges associated with the unnecessary conversion from UNE to other wholesale services.

6. AT&T Tennessee will not accept UNE orders for de-listed high capacity Loops or Dedicated Transport elements, as applicable, in the wire centers set forth on the Initial Unimpaired Wire Center List.

**Issue 4 – What is the appropriate language to implement AT&T Tennessee's obligation to provide Section 251 unbundled access to high-capacity loops and dedicated transport and how should the following terms be defined? (i) Business Line; (ii) Fiber-Based Collocator; (iii) Building (iv) Route; (v) Is a CLEC entitled to obtain DS3 transport from a Tier 3 wire center to each of two or more Tier 1 or Tier 2 wire centers? (vi) Is a CLEC entitled to obtain dark fiber transport from a Tier 3 wire center to each of two or more Tier 1 or Tier 2 wire centers?**

7. **(i) Business Line**

7.1 For purposes of this Amendment, a "Business Line" is, as defined in 47 C.F.R. § 51.5.

7.2 (ii) Fiber-Based Collocation

7.2.1 For purposes of this Amendment, a "Fiber-Based Collocator" is, as defined in 47 C.F.R. § 51.5.

7.3 (iii) Building

7.3.1 A building shall be defined on a case-by case basis using the standard of a "reasonable person in the telecommunications industry."

7.4 (iv) Route

7.4.1 For purposes of this Amendment, a "Route" is, as defined in 47 C.F.R. § 51.5 and §51.319 (e).

**Issue 5 – a) Does the Commission have the authority to determine whether or not AT&T Tennessee's application of the FCC's Section 251 non-impairment criteria for high-capacity loops and transport is appropriate?**

**b) What procedures should be used to identify those wire centers that satisfy the FCC's Section 251 non-impairment criteria for high-capacity loops and transport?**
**c) What language should be included in agreements to reflect the procedures identified in (b)?**

**8. Modifications and Updates to the Wire Center List and Subsequent Transition Periods**

8.1 DS1 or DS3 loops, or Dedicated Transport in Wire Centers that Meet the TRRO Unimpaired Criteria in the Future

8.2 In the event AT&T Tennessee identifies additional wire centers that meet the criteria set forth in Sections 1.4.1 (DS1 loops), 1.4.2 (DS3 loops), 4.2.6.1 (DS1 transport) and 4.2.6.2 (DS3 transport)

but that were not included in the Initial unimpaired Wire Center List AT&T Tennessee shall include such additional wire centers in an Accessible Letter (AL). Each such list of additional wire centers shall be considered a "Subsequent Wire Center List."

8.3 Designation by AT&T Tennessee of additional "non-impaired" wire centers will be based on the following criteria:

a. The CLLI of the wire center.

b. The number of switched business lines served by AT&T Tennessee in that wire center based upon data as reported in ARMIS 43-08 for the previous year.

c. The sum of all UNE Loops connected to each wire center, including UNE Loops provisioned in combination with other elements.

d. A completed worksheet that shows, in detail, any conversion of access lines to voice grade equivalents.

e. The names of any carriers relied upon as fiber-based collocators.

8.4 Level 3 shall have thirty (30) days to dispute the additional wire centers listed on AT&T Tennessee's AL AT&T Tennessee and Level 3 agree to resolve disputes concerning AT&T Tennessee's additional wire center designations in dispute resolution proceedings before the Commission.

8.4.1 Absent any such dispute being filed, effective thirty (30) business days after the date of an AT&T Tennessee AL providing a Subsequent Wire Center List, AT&T Tennessee shall not be required to unbundle DS1 and/or DS3 Loops or DS1 and/or DS3 Transport, as applicable, in such additional wire center(s).

8.5 AT&T Tennessee shall make available DS1 and DS3 Loops and Transport that were in service for Level 3 in a wire center on the Subsequent Wire Center List as of the thirtieth (30th) business day after the date of AT&T Tennessee's AL identifying the Subsequent Wire Center List (Subsequent Embedded Base) until one hundred eighty (180) days after the thirtieth (30th) business day from the date of AT&T Tennessee's AL identifying the Subsequent Wire Center List (Subsequent Transition Period.

8.6 Subsequent disconnects or loss of customers shall be removed from the Subsequent Embedded Base.

8.7 The rates that shall apply to the Subsequent Embedded Base during the Subsequent Transition Period shall be as set forth in Sections 1.6 (DS1 and DS3 loops), 4.2.9 (DS1 and DS3 Transport).

8.8 No later than one hundred eighty (180) days from AT&T Tennessee's AL identifying the Subsequent Wire Center List, Level 3 shall submit a spreadsheet(s) identifying the Subsequent Embedded Base of circuits to be disconnected or converted to other AT&T services. The Parties shall negotiate a project schedule for the Conversion of the Subsequent Embedded Base. Those circuits identified and converted to other AT&T Tennessee services shall be subject to the applicable switch-as-is rates.

8.9 If Level 3 fails to submit the spreadsheet(s) for all of its Subsequent Embedded Base within one hundred eighty (180) days after the date of AT&T Tennessee's AL identifying the Subsequent Wire Center List, AT&T Tennessee will identify Level 3's remaining Subsequent Embedded Base, if any, and will transition such circuits to the equivalent tariffed AT&T service(s). Those circuits identified

and transitioned by AT&T Tennessee shall be subject to the applicable switch-as-is rates set forth in Exhibit A.

8.10 For Subsequent Embedded Base circuits converted or transitioned, the applicable recurring tariff charges shall apply as of the earlier of the date each circuit is converted or transitioned, as applicable, or the first day after the end of the Subsequent Transition Period.

**Issue 6 – Are HDSL-capable copper loops the equivalent of DS1 loops for the purpose of evaluating impairment?**

**9. 2-wire or 4-wire HDSL-Compatible Loop**

This is a designed Loop that meets Carrier Serving Area (CSA) specifications, may be up to 12,000 feet long and may have up to 2,500 feet of bridged tap (inclusive of Loop length). It may be a 2-wire or 4-wire circuit and will come standard with a test point, OC, and a DLR.

**10. 4-wire Unbundled DS1 Digital Loop**

This is a designed 4-wire Loop that is provisioned according to industry standards for DS1 or Primary Rate ISDN services and will come standard with a test point, OC, and a DLR. A DS1 Loop may be provisioned over a variety of loop transmission technologies including copper, HDSL-based technology or fiber optic transport systems. It will include a 4-wire DS1 Network Interface at the End User's location. For purposes of this Agreement, including the transition of DS1 and DS3 Loops described in Section 1 above, DS1 Loops include 2-wire and 4-wire copper Loops capable of providing high-bit digital subscriber line services, such as 2-wire and 4-wire HDSL Compatible Loops.

**Issue 8 – (a) Does the Commission have the authority to require BellSouth to include in its ICAs entered into pursuant to Section 252, network elements either under state law or pursuant to Section 271 or any other federal law other than Section 251? (b) If the answer to part (a) is affirmative in any respect, does the Commission have the authority to establish rates for such element? (c) If the answer to part (a) or (b) is affirmative in any respect, (i) what language, if any should be included in the ICA with regard to the rates for such elements, and (ii) what language, if any, should be included in the ICA with regard to the terms and conditions of such elements?**

**11.** This Attachment 2 Exhibit A sets forth rates, terms and conditions for unbundled network elements (Network Elements) and combinations of Network Elements (Combinations) that AT&T Tennessee offers to Level 3 for Level 3's provision of Telecommunications Services in accordance with its obligations under Section 251(c)(3) of the Act.

**Issue 10 – Transition of De-listed Network Elements to which No Specified Transition Period Applies. What rates terms and conditions should govern the transition of existing network elements that AT&T Tennessee is no longer obligated to provide as Section 251 UNEs to non-Section 251 network elements and other services and (a) what is the proper treatment for such network elements at the end of the transition period, and (b) what is the appropriate transition period, and what are the appropriate rates, terms and conditions during such transition period, for unbundled high-capacity loops, high capacity transport, and dark fiber transport in and between wire centers that do not meet the FCC's non-impairment standards at this time, but that meet such standards in the future?**

**12.** Except to the extent expressly provided otherwise in this Attachment, Level 3 may not maintain unbundled network elements or combinations of unbundled network elements that are no longer offered pursuant to this Amendment (collectively "Arrangements"). In the event AT&T Tennessee determines that Level 3 has in place any Arrangements after the Effective Date of this Amendment, AT&T Tennessee shall provide Level 3 with thirty (30) days written notice to disconnect or convert such Arrangements. If Level 3 fails to submit orders to disconnect or convert such Arrangements within the aforementioned timeframes, AT&T Tennessee will transition such circuits to the equivalent tariffed AT&T service(s). Those circuits identified and transitioned by AT&T Tennessee pursuant to this section shall be subject to all applicable disconnect charges as set forth in this Agreement and the full nonrecurring charges for installation of the equivalent tariffed AT&T service as set forth in AT&T's tariffs.

**Issue 14 – What is the scope of commingling allowed under the FCC's rules and orders and what language should be included in Interconnection Agreements to implement commingling (including rates)?**

**13. Commingling of Services**

13.1 Commingling means the connecting, attaching, or otherwise linking of a Network Element, or a Combination, to one or more Telecommunications Services or facilities that Level 3 has obtained at wholesale from AT&T Tennessee, or the combining of a Network Element or Combination with one or more such wholesale Telecommunications Services or facilities. Level 3 must comply with all rates, terms or conditions applicable to such wholesale Telecommunications Services or facilities.

13.2 Subject to the limitations set forth elsewhere in this Attachment, AT&T Tennessee shall not deny access to a Network Element or a Combination on the grounds that one or more of the elements: 1) is connected to, attached to, linked to, or combined with such a facility or service obtained from AT&T Tennessee; or 2) shares part of AT&T Tennessee's network with access services or inputs for mobile wireless services and/or interexchange services.

13.3 Notwithstanding any other provision of this Agreement, AT&T Tennessee shall not be obligated to commingle or combine, pursuant to this Agreement, Network Elements, or Combinations with any service, network element or other offering that it is obligated to make available pursuant only to Section 271 of the Act.

13.4 Unless otherwise agreed to by the Parties, the Network Element portion of a commingled circuit will be billed at the rates set forth in Exhibit A of Attachment 2 and the remainder of the circuit or service will be billed in accordance with AT&T Tennessee's tariffed rates or rates set forth in a separate agreement between the Parties.

13.5 When multiplexing equipment is attached to a commingled arrangement, the multiplexing equipment will be billed from the same agreement or the tariff as the higher bandwidth circuit. Central Office Channel Interfaces (COCI) will be billed from the same agreement or tariff as the lower bandwidth circuit.

**Issue 15 – Is AT&T Tennessee required to provide conversion of special access circuits to UNE pricing, and, if so, what rates, terms and conditions and during what timeframe should such new requests for such conversions be effectuated?**

**14. Conversion of Wholesale Services to Network Elements or Network Elements to Wholesale Services**

14.1 Upon request, AT&T Tennessee shall convert a wholesale service, or group of wholesale services, to the equivalent Network Element or Combination that is available to Level 3 pursuant to this Agreement, or convert a Network Element or Combination that is available to Level 3 under this Agreement to an equivalent wholesale service or group of wholesale services offered by AT&T Tennessee (collectively "Conversion"). AT&T Tennessee shall charge the applicable nonrecurring switch-as-is rates for Conversions to specific Network Elements or Combinations found in Exhibit A of Attachment 2. AT&T Tennessee shall also charge the same nonrecurring switch-as-is rates when converting from Network Elements or Combinations. Any rate change resulting from the Conversion will be effective as of the next billing cycle following AT&T Tennessee's receipt of a complete and accurate Conversion request from Level 3. A Conversion shall be considered termination for purposes of any volume and/or term commitments and/or grandfathered status between Level 3 and AT&T Tennessee. Any change from a wholesale service/group of wholesale services to a Network Element/Combination, or from a Network Element/Combination to a wholesale service/group of wholesale services that requires a physical rearrangement will not be considered to be a Conversion for purposes of this Agreement. AT&T Tennessee will not require physical rearrangements if the Conversion can be completed through record changes only. Orders for Conversions will be handled in accordance with the guidelines set forth in the Ordering Guidelines and Processes and CLEC Information Packages.

14.2 Any outstanding conversions shall be effective on or after the effective date of this Agreement.

**Issue 19 - LINE SPLITTING: What is the appropriate ICA language to implement AT&T Tennessee's obligations with regard to line splitting?**

**15. Line Splitting**

15.1 Line splitting shall mean that a provider of data services (a Data LEC) and a provider of voice services (a Voice CLEC) deliver voice and data service to End Users over the same Loop. The Voice CLEC and Data LEC may be the same or different carriers. AT&T Tennessee will facilitate Line Splitting over a Loop (UNE-L) purchased by Level 3 pursuant to this Agreement.

15.2 Line Splitting – UNE-L. In the event Level 3 provides its own switching or obtains switching from a third party, Level 3 may engage in line splitting arrangements with another CLEC using a splitter, provided by Level 3, in a Collocation Space at the central office where the Loop terminates into a distribution frame or its equivalent.

15.3 Provisioning Line Splitting and Splitter Space – UNE-L

15.3.1 The Data LEC, Voice CLEC, a third party or AT&T Tennessee may provide the splitter. When Level 3 or its authorized agent owns the splitter, Line Splitting requires the following: a loop from NID at the End User's location to the serving wire center and terminating into a distribution frame or its equivalent. Where AT&T Tennessee owns the splitter, AT&T Tennessee shall provide the splitter functionality upon request and consistent with the FCC's rules, and shall establish the necessary processes in its OSS to facilitate Level 3's ability to engage in line splitting arrangements.

15.3.2 An unloaded 2-wire copper Loop must serve the End User. The meet point for the Voice CLEC and the Data CLEC is the point of termination on the MDF for the Data CLEC's cable and pairs.

15.4 CLEC Provided Splitter – Line Splitting

15.4.1 To order High Frequency Spectrum on a particular Loop, Level 3 must have a DSLAM collocated in the central office that serves the End User of such Loop.

15.4.2 CLEC must provide its own splitters in a central office and have installed its DSLAM in that central office.

15.4.3 Level 3 may purchase, install and maintain central office POTS splitters in its collocation arrangements. Level 3 may use such splitters for access to its end users and to provide digital line subscriber services to its end users using the High Frequency Spectrum. Existing Collocation rules and procedures and the terms and conditions relating to Collocation set forth in Attachment 4-Central Office shall apply.

15.4.4 Any splitters installed by Level 3 in its collocation arrangement shall comply with ANSI T1.413, Annex E, or any future ANSI splitter Standards. Level 3 may install any splitters that AT&T Tennessee deploys or permits to be deployed for itself or any AT&T Tennessee affiliate.

15.5 Maintenance – Line Splitting – UNE-L

15.5.1 AT&T Tennessee will be responsible for repairing voice troubles and the troubles with the physical loop between the NID at the End User's premises and the termination point.

15.5.2 AT&T Tennessee must make all necessary network modifications, including providing nondiscriminatory access to operations support systems necessary for pre-ordering, ordering, provisioning, maintenance and repair, and billing for loops used in line splitting arrangements.

15.6 Indemnification

15.6.1 Level 3 shall indemnify, defend and hold harmless AT&T Tennessee from and against any claims, losses, actions, causes of action, suits, demands, damages, injury and costs including reasonable attorney fees, which arise out of actions related to the other service provider (i.e. CLEC party to the line splitting arrangement who is not Level 3), except to the extent caused by AT&T Tennessee's gross negligence or willful misconduct.

**Issue 22 – What is the appropriate ICA language, if any, to address call related databases?**

**16. Call Related Databases and Signaling**

16.1 Except for 911 and E911, AT&T Tennessee is not required to provide unbundled access to call related databases pursuant to Section 251.

16.2 911 and E911 Databases

16.2.1 AT&T Tennessee shall provide Level 3 with nondiscriminatory access to 911 and E911 databases on an unbundled basis, in accordance with 47 C.F.R. § 51.319 (f).

16.2.2 The ALI/DMS database contains End User information (including name, address, telephone information, and sometimes special information from the local service provider or End User) used to determine to which PSAP to route the call. The ALI/DMS database is used to provide enhanced routing flexibility for E911. Level 3 will be required to provide the AT&T Tennessee 911 database vendor daily service order updates to E911 database in accordance with Section 14.3. below.

16.3 Technical Requirements

16.3.1 AT&T Tennessee's 911 database vendor shall provide Level 3 the capability of providing updates to the ALI/DMS database through a specified electronic interface. Level 3 shall contact AT&T Tennessee's 911 database vendor directly to request interface. Level 3 shall provide updates

directly to AT&T Tennessee's 911 database vendor on a daily basis. Updates shall be the responsibility of Level 3 and AT&T Tennessee shall not be liable for the transactions between Level 3 and AT&T Tennessee's 911 database vendor.

16.3.2 It is Level 3's responsibility to retrieve and confirm statistical data and to correct errors obtained from AT&T Tennessee's 911 database vendor on a daily basis. All errors will be assigned a unique error code and the description of the error and the corrective action is described in the CLEC Users Guide for Facility Based Providers that is found on the AT&T Wholesale-Southeast Region Web site: http://wholesale.att.com/wholesale_markets/local/.

16.3.3 Level 3 shall conform to the AT&T Tennessee standards as described in the CLEC Users Guide to E911 for Facilities Based Providers that is located on the AT&T Wholesale-Southeast Region Web site: http://wholesale.att.com/wholesale_markets/local/.

16.3.4 Stranded Unlocks are defined as End User records in AT&T Tennessee's ALI/DMS database that have not been migrated for over ninety (90) days to Level 3, as a new provider of local service to the End User. Stranded Unlocks are those End User records that have been "unlocked" by the previous local exchange carrier that provided service to the End User and are open for Level 3 to assume responsibility for such records.

16.3.5 Based upon End User record ownership information available in the NPAC database, AT&T Tennessee shall provide a Stranded Unlock annual report to Level 3 that reflects all Stranded Unlocks that remain in the ALI/DMS database for over ninety (90) days. Level 3 shall review the Stranded Unlock report, identify its Customer records and request to either delete such records or migrate the records to Level 3 within two (2) months following the date of the Stranded Unlock report provided by AT&T Tennessee. Level 3 shall reimburse AT&T Tennessee for any charges AT&T Tennessee's database vendor imposes on AT&T Tennessee for the deletion of Level 3's records.

**Issue 23 - What is the appropriate language to implement AT&T Tennessee's obligation, if any, to offer unbundled access to newly deployed or "greenfield" fiber loops, including fiber loops deployed to the minimum point of entry (MPOE) of a multiple dwelling unit that is predominantly residential and what, if any impact does the ownership of the inside wiring from the MPOE to each end user have one this obligation?**

**Issue 28 - What is the appropriate language, if any, to address access to overbuild deployments of fiber to the home and fiber to the curb facilities?**

**17.** Fiber to the Home (FTTH) loops are local loops consisting entirely of fiber optic cable, whether dark or lit, serving an End User's premises or, in the case of predominantly residential multiple dwelling units (MDUs), a fiber optic cable, whether dark or lit, that extends to the MDU minimum point of entry (MPOE).

17.1 Fiber to the Curb (FTTC) loops are local loops consisting of fiber optic cable connecting to a copper distribution plant that is not more than five hundred (500) feet from the End User's premises or, in the case of predominantly residential MDUs, not more than five hundred (500) feet from the MDU's MPOE. The fiber optic cable in a FTTC loop must connect to a copper distribution plant at a serving area interface from which every other copper distribution subloop also is not more than five hundred (500) feet from the respective End User's premises.

17.2 Greenfield Requirements: In new build (Greenfield) areas, where AT&T Tennessee has only deployed FTTH/FTTC facilities, AT&T Tennessee is under no obligation to provide such FTTH and FTTC Loops. FTTH facilities include fiber loops deployed to the MPOE of a MDU that is predominately residential regardless of the ownership of the inside wiring from the MPOE to each End User in the MDU.

17.3 Overbuild Requirements: In FTTH/FTTC overbuild situations where AT&T Tennessee also has copper loops, AT&T Tennessee will make those copper loops available to CLEC on an unbundled basis, until such time as AT&T Tennessee chooses to retire those copper Loops using the FCC's network disclosure requirements. In these cases, AT&T Tennessee will offer a 64 Kbps second voice grade channel over its FTTH/FTTC facilities. AT&T Tennessee's retirement of copper loops must comply with Applicable Law.

17.4 DS1/DS3 Requirements: Notwithstanding the above, nothing in this Section shall limit AT&T Tennessee's obligation to offer CLECs unbundled DS1 and DS3 loops (or loop/transport combination), regardless of the Loop medium employed, in any wire center where AT&T Tennessee is required to provide such loop facilities.

**Issue 24 - What is the appropriate ICA language to implement AT&T Tennessee's obligation to provide unbundled access to hybrid loops?**

**18.** Hybrid loops are defined in the federal rules at 47 CFR §51.319(a)(2) as local loops, composed of both fiber optic cable, usually in the feeder plant, and copper twisted wire or cable, usually in the distribution plant. AT&T Tennessee shall provide Level 3with nondiscriminatory access to the time division multiplexing features, functions and capabilities of such hybrid loop, including DS1 and DS3 capacity under Section 251 where impairment exists, on an unbundled basis to establish a complete transmission path between AT&T Tennessee's central office and an End User's premises, but AT&T Tennessee is not required to provide access to the packet switched features, functions and capabilities of its hybrid loops.

18.1 AT&T Tennessee shall not engineer the transmission capabilities of its network in a manner, or engage in any policy, practice, or procedure, that disrupts or degrades access to a local loop or subloop, including the time division multiplexing-based features, functions, and capabilities of a hybrid loop, for which a requesting telecommunications carrier may obtain or has obtained access pursuant to this Attachment.

**Issue 26: What is the appropriate ICA language to implement BellSouth's obligation to provide RNMs?**

**Issue 27: What is the appropriate process for establishing a rate, if any, to allow for the cost of a routine network modification that is not already recovered in Commission-approved recurring and nonrecurring rates? What is the appropriate language, if any, to incorporate into the ICAs?**

**19. Routine Network Modifications**

19.1 AT&T Tennessee will perform Routine Network Modifications (RNM) in accordance with FCC 47 CFR 51.319 (a)(7) and (e)(4) for Loops and Dedicated Transport provided under this Attachment. If AT&T Tennessee has anticipated such RNM and performs them during normal operations and has recovered the costs for performing such modifications through the rates set forth in Exhibit A of

Attachment 2 of the Agreement, then AT&T Tennessee shall perform such RNM at no additional charge.

19.2 RNM shall be performed within the intervals established for the Network Element and subject to the service quality measurements and associated remedies set forth in Attachment 9 of this Agreement to the extent such RNM were anticipated in the setting of such intervals. If AT&T Tennessee has not anticipated a requested network modification as being a RNM and has not recovered the costs of such RNM in the rates set forth in Exhibit A of Attachment 2 of the Agreement, then AT&T Tennessee can submit TELRIC-based cost studies and seek approval from the Commission.

**Issue 28: What is the appropriate language, if any, to address access to overbuild deployments of fiber to the home and fiber to the curb facilities?**

**20.** In FTTH/FTTC overbuild areas where AT&T Tennessee has not yet retired copper facilities, AT&T Tennessee is not obligated to ensure that such copper Loops in that area are capable of transmitting signals prior to receiving a request for access to such Loops by Level 3. If a request is received by AT&T Tennessee for a copper Loop, and the copper facilities have not yet been retired, AT&T Tennessee will restore the copper Loop to serviceable condition if technically feasible. In these instances of Loop orders in an FTTH/FTTC overbuild area, AT&T Tennessee's standard Loop provisioning interval will apply. If AT&T Tennessee is unable to meet the standard loop provisioning interval, then AT&T Tennessee must provide a 64KBps voice grade channel over its FTTH/FTTC facilities while the copper is being restored.

**Issue 29 - What is the appropriate ICA language to implement AT&T Tennessee's EEL audit rights, if any, under the TRO?**

**21. EELs Audit Provisions**

21.1 After June 29, 2010,AT&T Tennessee may, on an annual basis, audit Level 3's records based on cause, in order to verify compliance with the high capacity EEL eligibility criteria. To invoke the audit, AT&T Tennessee shall send a written Notice of Audit to Level 3. Such Notice of Audit will be delivered to Level 3 no less than thirty (30) calendar days prior to the date upon which AT&T Tennessee seeks to commence an audit

21.2 Such Notice of Audit to Level 3 shall state AT&T Tennessee's concern that Level 3 is not complying with the service eligibility requirements and a concise statement of the reasons therefore. AT&T Tennessee is not required to provide documentation, as distinct from a statement of concern, to support its basis for an audit, or seek the concurrence of the requesting carrier before selecting the location of the audit. AT&T Tennessee may select the independent auditor without the prior approval of Level 3, but AT&T Tennessee should identify the auditor selected to perform the audit prior to the audit commencing. AT&T Tennessee shall furnish a copy of the notice to the Commission. If Level 3 challenges the concern provided by AT&T Tennessee, or the independence of the auditor selected, AT&T Tennessee shall submit for Commission approval the letter of engagement between itself and its independent auditor along with a proposed methodology/procedure for conducting each EEL audit.

21.3 The audit shall be conducted by a third party independent auditor, and the audit must be performed in accordance with the standards established by the American Institute for Certified Public Accountants (AICPA) which will require the auditor to perform an "examination engagement" and issue a report regarding Level 3's compliance with the high capacity EEL eligibility criteria. AICPA standards and other AICPA requirements will be used to determine the independence of an auditor. The independent auditor's report will conclude whether Level 3 complied in all material respects with the applicable service eligibility criteria. Consistent with standard auditing practices, such audits require compliance testing designed by the independent auditor.

21.4 To the extent the independent auditor's report concludes that Level 3 failed to comply with the service eligibility criteria, Level 3 must true-up any difference in payments, convert all noncompliant circuits to the appropriate service, and make the correct payments on a going-forward basis.

21.5 To the extent the independent auditor's report concludes that Level 3 did not comply in any material respect with the service eligibility criteria, Level 3 shall reimburse AT&T Tennessee for the cost of the independent auditor. To the extent the independent auditor's report concludes that Level 3 did comply in all material respects with the service eligibility criteria, AT&T Tennessee will reimburse Level 3 for its reasonable and demonstrable costs associated with the audit. Level 3 will maintain appropriate documentation to support its certifications. The Parties shall provide such reimbursement within thirty (30) days of receipt of a statement of such costs.

**Issue 25 – Under the FCC's definition of a loop found in 47 C.F.R. §51.319(a), is a mobile switching center or cell site an "end User customer's premises?"**

**22.** Level 3 shall not obtain a Network Element for the exclusive provision of mobile wireless services or interexchange services.

**23.** Facilities that do not terminate at a demarcation point at an End User premises, including, by way of example, but not limited to, facilities that terminate to another carrier's switch or premises, a cell site, Mobile Switching Center or base station, do not constitute local Loops under Section 251, except to the extent that Level 3 may require Loops to such locations for the purpose of providing telecommunications services to its personnel at those locations.

**Issue 20 – a) What is the appropriate ICA language, if any, to address sub loop feeder or sub loop concentration? b) Do the FCC's rules for sub loops for multi-unit premises limit CLEC access to copper facilities only or do they also include access to fiber facilities? C) What are the suitable points of access for sub-loops for multi-unit premises?**

**24. Subloop Elements**

24.1 Where facilities permit, AT&T Tennessee shall offer access to its Unbundled Subloop (USL) elements as specified herein.

24.2 Unbundled Subloop Distribution (USLD)

24.2.1 The USLD facility is a dedicated transmission facility that AT&T Tennessee provides from an End User's point of demarcation to an AT&T Tennessee cross-connect device. The AT&T Tennessee cross-connect device may be located within a remote terminal (RT) or a stand-alone cross-box in the field or in the equipment room of a building. The USLD media is a copper twisted pair that can

be provisioned as a 2-wire or 4-wire facility. AT&T Tennessee will make available the following subloop distribution offerings where facilities exist:

USLD – Voice Grade (USLD-VG)
Unbundled Copper Subloop (UCSL)
USLD – Intrabuilding Network Cable (USLD-INC (aka riser cable))

24.2.2 USLD-VG is a copper subloop facility from the cross-box in the field up to and including the point of demarcation at the End User's premises and may have load coils.

24.2.3 UCSL is a copper facility eighteen thousand (18,000) feet or less in length provided from the cross-box in the field up to and including the End User's point of demarcation. If available, this facility will not have any intervening equipment such as load coils between the End User and the cross-box.

24.2.4 If Level 3 requests a UCSL and it is not available, Level 3 may request the copper Subloop facility be modified pursuant to the ULM process to remove load coils and/or excessive bridged taps. If load coils and/or excessive bridged taps are removed, the facility will be classified as a UCSL.

24.2.5 USLD-INC is the distribution facility owned or controlled by AT&T Tennessee inside a building or between buildings on the same property that is not separated by a public street or road. USLD-INC includes the facility from the cross-connect device in the building equipment room up to and including the point of demarcation at the End User's premises.

24.2.6 Upon request for USLD-INC from Level 3, AT&T Tennessee will install a cross-connect panel in the building equipment room for the purpose of accessing USLD-INC pairs from a building equipment room. The cross-connect panel will function as a single point of interconnection (SPOI) for USLD-INC and will be accessible by multiple carriers as space permits. AT&T Tennessee will place cross-connect blocks in twenty five (25) pair increments for Level 3's use on this cross-connect panel. Level 3 will be responsible for connecting its facilities to the twenty five (25) pair cross-connect block(s).

24.2.7 For access to Voice Grade USLD and UCSL, Level 3 shall install a cable to the AT&T Tennessee cross-box pursuant to the terms and conditions for physical collocation for remote sites set forth in Attachment 4. This cable would be connected by an AT&T Tennessee technician within the AT&T Tennessee cross-box during the set-up process. Level 3's cable pairs can then be connected to AT&T Tennessee's USL within the AT&T Tennessee cross-box by the AT&T Tennessee technician.

24.2.8 Through the SI process, AT&T Tennessee will determine whether access to USLs at the location requested by Level 3 is technically feasible and whether sufficient capacity exists in the cross-box. If existing capacity is sufficient to meet Level 3's request, then AT&T Tennessee will perform the site set-up as described in the CLEC Information Package, located at AT&T Wholesale-Southeast Region Web Site at: http://wholesale.att.com/.

24.2.9 The site set-up must be completed before Level 3 can order Subloop pairs. For the site set-up in an AT&T Tennessee cross-connect box in the field, AT&T Tennessee will perform the necessary work to splice Level 3's cable into the cross-connect box. For the site set-up inside a building equipment room, AT&T Tennessee will perform the necessary work to install the cross-connect panel and the connecting block(s) that will be used to provide access to the requested USLs.

24.2.10 Once the site set-up is complete, Level 3 will request Subloop pairs through submission of a LSR form to the LCSC. OC is required with USL pair provisioning when Level 3 requests reuse of an existing facility, and the OC charge shall be billed in addition to the USL pair rate. For expedite requests by Level 3 for Subloop pairs, expedite charges will apply for intervals less than five (5) days.

24.2.11 USLs will be provided in accordance with AT&T's TR73600 Unbundled Local Loop Technical Specifications.

24.3 Unbundled Network Terminating Wire (UNTW)

24.3.1 UNTW is unshielded twisted copper wiring that is used to extend circuits from an intra-building network cable terminal or from a building entrance terminal to an individual End User's point of demarcation. It is the final portion of the Loop that in multi-subscriber configurations represents the point at which the network branches out to serve individual subscribers.

24.3.1.1 This element will be provided in MDUs and/or Multi-Tenants Units (MTUs) where either Party owns wiring all the way to the End User's premises. Neither Party will provide this element in locations where the property owner provides its own wiring to the End User's premises, where a third party owns the wiring to the End User's premises.

24.3.2 Requirements

24.3.2.1 On a multi-unit premises, upon request of the other Party (Requesting Party), the Party owning the network terminating wire (Provisioning Party) will provide access to UNTW pairs on an Access Terminal that is suitable for use by multiple carriers at each Garden Terminal or Wiring Closet.

24.3.2.2 The Provisioning Party shall not be required to install new or additional NTW beyond existing NTW to provision the services of the Requesting Party.

24.3.2.3 In existing MDUs and/or MTUs in which AT&T Tennessee does not own or control wiring (INC/NTW) to the End User's premises, and Level 3 does own or control such wiring, Level 3 will install UNTW Access Terminals for AT&T Tennessee under the same terms and conditions as AT&T Tennessee provides UNTW Access Terminals to Level 3.

24.3.2.4 In situations in which AT&T Tennessee activates a UNTW pair, AT&T Tennessee will compensate Level 3 for each pair activated commensurate to the price specified in Level 3's Agreement.

24.3.2.5 Upon receipt of the UNTW SI requesting access to the Provisioning Party's UNTW pairs at a multi-unit premises, representatives of both Parties will participate in a meeting at the site of the requested access. The purpose of the site visit will include discussion of the procedures for installation and location of the Access Terminals. By request of the Requesting Party, an Access Terminal will be installed either adjacent to each of the Provisioning Party's Garden Terminal or inside each Wiring Closet. The Requesting Party will deliver and connect its central office facilities to the UNTW pairs within the Access Terminal. The Requesting Party may access any available pair on an Access Terminal. A pair is available when a pair is not being utilized to provide service or where the End User has requested a change in its local service provider to the Requesting Party. Prior to connecting the Requesting Party's service on a pair previously used by the Provisioning Party, the Requesting Party is responsible for ensuring the End User is no longer using the Provisioning Party's service or another CLEC's service before accessing UNTW pairs.

24.3.2.6 Access Terminal installation intervals will be established on an individual case basis.

24.3.2.7 The Requesting Party is responsible for obtaining the property owner's permission for the Provisioning Party to install an Access Terminal(s) on behalf of the Requesting Party. The

submission of the SI by the Requesting Party will serve as certification by the Requesting Party that such permission has been obtained. If the property owner objects to Access Terminal installations that are in progress or within thirty (30) days after completion and demands removal of Access Terminals, the Requesting Party will be responsible for costs associated with removing Access Terminals and restoring the property to its original state prior to Access Terminals being installed.

24.3.2.8 The Requesting Party shall indemnify and hold harmless the Provisioning Party against any claims of any kind that may arise out of the Requesting Party's failure to obtain the property owner's permission. The Requesting Party will be billed for nonrecurring and recurring charges for accessing UNTW pairs at the time the Requesting Party activates the pair(s). The Requesting Party will notify the Provisioning Party within five (5) business days of activating UNTW pairs using the LSR form.

24.3.2.9 If a trouble exists on a UNTW pair, the Requesting Party may use an alternate spare pair that serves that End User if a spare pair is available. In such cases, the Requesting Party will re-terminate its existing jumper from the defective pair to the spare pair. Alternatively, the Requesting Party will isolate and report troubles in the manner specified by the Provisioning Party. The Requesting Party must tag the UNTW pair that requires repair. If the Provisioning Party dispatches a technician on a reported trouble call and no UNTW trouble is found, the Provisioning Party will charge Requesting Party for time spent on the dispatch and testing the UNTW pair(s).

24.3.2.10 If the Requesting Party initiates the Access Terminal installation and the Requesting Party has not activated at least ten percent (10%) of the capacity of the Access Terminal installed pursuant to the Requesting Party's request for an Access Terminal within six (6) months of installation of the Access Terminal, the Provisioning Party will bill the Requesting Party a nonrecurring charge equal to the actual cost of provisioning the Access Terminal.

24.3.2.11 If the Provisioning Party determines that the Requesting Party is using the UNTW pairs without reporting the activation of the pairs, the Requesting Party will be billed for the use of that pair back to the date the End User began receiving service from the Requesting Party at that location. Upon request, the Requesting Party will provide copies of its billing record to substantiate such date. If the Requesting Party fails to provide such records, then the Provisioning Party will bill the Requesting Party back to the date of the Access Terminal installation.

**AMENDMENT TO**
**INTERCONNECTION AGREEMENT UNDER SECTIONS 251 AND 252 OF THE**
**TELECOMMUNICATIONS ACTOF 1996**
**BETWEEN**
**BELLSOUTH TELECOMMUNICATIONS, INC.**
**d/b/a AT&T ALABAMA, AT&T FLORIDA, AT&T GEORGIA,**
**AT&T KENTUCKY, AT&T LOUISIANA, AT&T MISSISSIPPI,**
**AT&T NORTH CAROLINA, AT&T SOUTH CAROLINA AND AT&T TENNESSEE**
**AND**
**LEVEL 3 COMMUNICATIONS, L.L.C.**

The Interconnection Agreement dated June 23, 2004 by and between BellSouth Telecommunications, Inc. d/b/a AT&T Alabama, AT&T Florida, AT&T Georgia, AT&T Kentucky, AT&T Louisiana, AT&T Mississippi, AT&T North Carolina, AT&T South Carolina and AT&T Tennessee ("AT&T") and Level 3 Communications, L.L.C. ("Level 3") ("Agreement") effective in the state(s) of Alabama, Florida, Georgia, Kentucky, Louisiana, Mississippi, North Carolina, South Carolina and Tennessee, is hereby amended as follows:

1. Sections 7.2, 7.2.1 and 7.2.2 of Attachment 3 - Network Interconnection are hereby deleted in their entirety and replaced with the following new sections 7.2, 7.2.1 and 7.2.2:

    7.2 The Parties agree to compensate each other for the transport and termination of ISP-Bound Traffic and all Local Traffic on a minute of use basis, at $.0007 per minute of use.

    7.2.1 Intentionally Left Blank.

    7.2.2 Intentionally Left Blank.

2. EXCEPT AS MODIFIED HEREIN, ALL OTHER TERMS AND CONDITIONS OF THE UNDERLYING AGREEMENT SHALL REMAIN UNCHANGED AND IN FULL FORCE AND EFFECT.

3. In entering into this Amendment neither Party waives, and each Party expressly reserves, any rights, remedies or arguments it may have at law or under the intervening law or regulatory change provisions in the underlying Agreement (including intervening law rights asserted by either Party via written notice predating this Amendment) with respect to any orders, decisions, legislation or proceedings and any remands thereof, which the Parties have not yet fully incorporated into this Agreement or which may be the subject of further review.

4. This Amendment shall be filed with and is subject to approval by the Commission(s) and shall become effective on the date of the last signature executing the Amendment.

**AMENDMENT TO REMOVE ISP GROWTH CAP LANGUAGE/**
**BELLSOUTH TELECOMMUNICATIONS, INC.**
**d/b/a AT&T ALABAMA, AT&T FLORIDA, AT&T GEORGIA**
**AT&T KENTUCKY, AT&T LOUISIANA, AT&T MISSISSIPPI,**
**AT&T NORTH CAROLINA, AT&T SOUTH CAROLINA, AND AT&T TENNESSEE ("AT&T")**
SIGNATURE PAGE 1 OF 1
Level 3
VERSION – 10/09/08

**Level 3 Communications, L.L.C.**

**BellSouth Telecommunications Inc, d/b/a AT&T Alabama, d/b/a AT&T Florida, d/b/a AT&T Georgia, d/b/a AT&T Kentucky, d/b/a AT&T Louisiana, d/b/a AT&T Mississippi, d/b/a AT&T North Carolina, d/b/a AT&T South Carolina, d/b/a AT&T Tennessee by AT&T Operations, Inc., its authorized agent**

**Level 3 Communications, L.L.C.**

By: Jamie Mayer

Name: Jamie Mayer

Title: Sr. Dir - Interconnection Services

Date: 3/23/09

By:

Name: Eddie A. Reed, Jr.

Title: Director-Interconnection Agreements

Date: 4-24-09

| | Resale OCN | UNE OCN | Switch Based OCN |
|---|---|---|---|
| ALABAMA | | | |
| FLORIDA | | | |
| GEORGIA | | | |
| KENTUCKY | | | |
| LOUISANA | | | |
| MISSISSIPPI | | | |
| NORTH CAROLINA | | | |
| SOUTH CAROLINA | | | |
| TENNESSEE | | | |

ACNA _____